STI Engineering
Communications & Electronics Engineers
incorporating RFInnovations

STI Engineering Pty Ltd
ABN 97 065 523 579

22 Boulder Rd Malaga 6090
Western Australia

Telephone: +61 8 9209 0900
Facsimile: +61 8 9248 2833
Email: sales@stiengineering.com.au
Web: www.stiengineering.com.au

RFI-148 & RFI-900 HIGH OUTPUT POWER PAGING TRANSMITTERS

USER MANUAL

RFI-148 & RFI-900 High Output Power Paging Transmitters

User Manual

DISCLAIMER

© 2022 STI Engineering Pty Ltd. All rights reserved.

STI Engineering reserves the right to make improvements on the product in this manual at any time without notice.

No part of this manual may be produced, copied, translated, or transmitted in any form or by any means without the written permission of STI Engineering.

Information provided in this manual is intended to be accurate and reliable. However, STI Engineering assumes no responsibility for its use or infringements upon the rights of third parties that may result from its use.

Reference No. MAN00165
Revision 2.38
March 2022

Contents

1. Introduction **7**

2. Installation **8**

2.1 General Considerations *8*

2.2 External Antennas *8*

2.3 Product Installation *9*
2.3.1 Installation Guidelines to Ensure Safe Exposure Levels 10
2.3.2 Typical Installation 11

2.4 Safety and Compliance *13*
2.4.1 US 13
2.4.2 EU 13
2.4.3 Canada 13
2.4.4 Modifications 14

3. Configuration **15**

3.1 Overview *15*

3.2 Cruise Control *15*
3.2.1 Installation 16
3.2.2 Connecting to the Paging Transmitter 16
3.2.3 Device Navigation 16
3.2.4 Sensor Gauges 16
3.2.5 Firmware Update 17

3.3 SNMP *18*

3.4 Terminal Menu Interface *19*

3.5 Hayes AT Command Interface *19*
3.5.1 List Slicing Syntax 20
3.5.2 Sequenced AT Commands 20

3.6 Front Panel Interface *21*

3.7 LIU Interface *22*
3.7.1 Hot Standby 23
3.7.2 Analogue Paging 23

4. Operation **24**

4.1 Serial Port Operation *24*
4.1.1 Overview 24
4.1.2 Configuration 24
4.1.3 Statistics 24

4.2 Ethernet Operation *25*
4.2.1 Overview 25
4.2.2 IP Addressing 25
4.2.3 Statistics 25

4.3 Transmitter Operation *25*
4.3.1 Transmit Power 25
4.3.2 Channel Selection 25
4.3.3 Push-To-Talk (PTT) 26
4.3.4 External Reference 28
4.3.5 Absolute Delay Adjustment 29
4.3.6 RF Diagnostics 29

4.4 Data *29*
4.4.1 Modulation Formats 30

4.4.2 Inversion 30
4.4.3 2-Level Deviation Mapping 30
4.4.4 4-Level Deviation Mapping 31
4.4.5 FLEX™ Operation 31
4.4.6 Custom Deviation 32
4.4.7 Carrier Offset 32

4.5 Fan Control 32
4.5.1 Fan Override 32
4.5.2 Self-Test 32

5. Diagnostics 33

5.1 Status Monitoring 33
5.1.1 Conditional Cut-off Checking 33
5.1.2 Minimum and Maximum Sensor History 34

5.2 Faults 34
5.2.1 Fault Actions 34
5.2.2 Fleeting Faults 35
5.2.3 Combined Fault 35
5.2.4 Hardware Alarm Outputs 35

5.3 Remote Firmware Update and Snapshot 35
5.3.1 Update 35
5.3.2 Snapshot 36

5.4 Time 37
5.4.1 Real Time Clock 37
5.4.2 SNTP Client 37

6. Internal Encoding 38

6.1 Overview 38

6.2 POCSAG Settings 38
6.2.1 Page Repeating 38
6.2.2 Tx Delay 38

6.3 Protocols Supported 39
6.3.1 TNPP 39
6.3.2 PET 39
6.3.3 TAP 39
6.3.4 Page Datagram 40

6.4 Test Functions 42

6.5 Event Triggered Page 42

6.6 Encryption 42
6.6.1 Key Scheme 42
6.6.2 Encrypting 45
6.6.3 Security 45

7. Hot Standby Operation 47

7.1 Overview 47

7.2 Compatibility and Configuration 48

7.3 Operation 49

7.4 Switchover Faults 49

7.5 Hardware Feedback 50

8. Analogue Paging 51

8.1 Compatibility 51

8.2 Features ... *51*
8.2.1 Signal format ... 51
8.2.2 Pre-emphasis Filter ... 52
8.2.3 Deviation Limiter ... 52
8.2.4 Audio Polarity ... 52
8.3 Calibration ... *52*
8.4 Configuration ... *54*
8.5 Faults and Alarms ... *54*

Appendix A. Technical Specifications ... 55
A.1 Type Approvals ... *55*
A.2 RFI-148/900250 Specifications ... *55*
A.3 Serial Connectors ... *59*
A.3.1 Rear Serial Port ... 59
A.3.2 Front Serial Port (DCE) ... 59
A.4 LIU Interface ... *61*

Appendix B. Controller Configurations ... 64
B.1 Motorola NIU Controller / FLEX 4 Level Mode Legacy ... *64*
B.2 Glenayre C2000 Controller / FLEX 4 Level Mode Normal ... *64*
B.3 Glenayre C2000 Controller / FLEX 4 Level Mode Legacy ... *65*
B.4 Glenayre C2000 Controller / POCSAG/FLEX 2 Level Mode L-bit ... *65*
B.5 Glenayre C2000 Controller / POCSAG/FLEX 2 Level Mode H-bit ... *65*
B.6 Zetron Model 66 Transmitter Controller / POCSAG/FLEX 2 Level Mode ... *66*

Appendix C. Management Reference ... 67
C.1 Serial Port Diagnostics ... *67*
C.2 SNMP Diagnostic Parameters ... *68*

Appendix D. Hayes AT Reference ... 71

Appendix E. Sensor and Fault List Reference ... 116

Appendix F. Product Identification Table ... 126

Appendix G. Troubleshooting ... 128
G.1 Configuring Sensor Cutoffs ... *128*
G.2 Fault LED Active ... *128*
G.3 External Reference Fail ... *129*
G.4 High Transmit Power ... *130*
G.5 High VSWR ... *130*
G.6 Disable Transmit ... *130*
G.6.1 High PA or Driver Temperature ... 130
G.6.2 High Reverse Power or Reverse Power Foldback ... 131
G.6.3 Exciter Out-of-Lock ... 131
G.6.4 Transmit Timeout ... 131
G.7 Unit Won't Transmit ... *131*
G.7.1 PTT Override ... 131

G.7.2 Hardware or Auto PTT 132
G.7.3 Profile Definition 132

G.8 Unit Transmits at Low Power 132

Appendix H. Glossary 133

1. Introduction

The RFI-148 and RFI-900 are high power output paging transmitters operating in the VHF and UHF band, respectively.

- RFI-148: VHF band operation (138 MHz – 174 MHz) with 2.5 – 6 MHz switching bandwidth
- RFI-900: UHF band operation (929 MHz – 932 MHz) with 3 MHz switching bandwidth
- Up to 250 W (54 dBm) maximum transmit power. Software limited to 110 W (50.4 dBm) maximum transmit power for Canadian release.
- Compatible with:
  - POCSAG 512, 1200, 2400 bps (2-level FSK).
  - FLEX 1600 (2-level FSK), 3200 (2- or 4-level FSK), 6400 bps (4-level FSK).
- Windows GUI for configuration and diagnostics over serial or network (Cruise Control).
- SNMP diagnostics.
- TNPP and PET/TAP support (decoder) over serial or network.
- POCSAG encoder with in-built deployment test and modulation self-test feature.
- DSP precision modulation.
- Integrated isolator.
- RF diagnostics port for in-rack receiver.
- Remote firmware update capability.
- Software selectable frequency offset.
- Adjustable absolute delay correction.
- Hardware alarm outputs.
- Front panel indicators for power output and diagnostics.
- High frequency stability and external reference option.

2. Installation

2.1 General Considerations

There are a number of rules to observe when installing a paging transmitter.

Antenna selection is vital to a good RF link. Different antennas are required depending on the application. Please contact your antenna manufacturer or STI Engineering for correct antenna selection.

Antenna placement has a significant impact on RF link performance. In general, higher antenna placement results in a better communication link. A vantage point should be chosen to clear the propagation ellipsoid. An unobstructed, line-of-sight link will always perform better than a cluttered or obstructed link.

Obstructions, such as walls and poles, will distort the antenna radiation pattern and VSWR, resulting in less efficient transmission and reception.

Antennas in close proximity are potential sources of mutual interference. A transmitter can cause overload of a nearby receiver, if due precautions are not taken in antenna location. Moreover, transmitters in close proximity may cause intermodulation. Slight adjustments in antenna placement may help solving interference problems.

All items of radio equipment, such as antennas, are sources of RF radiation. They should thus be placed away from electrical equipment, such as computers, telephones or answering machines.

Serial cable runs between radio modem and attached terminal equipment (eg RTU or PC) should be kept as small as possible. A maximum cable capacitance of 2,400 pF is recommended for transfer rates up to 19.2 kbit/s. If a non-shielded, 30 pF / foot cable is used, the maximum length should be limited to 80 feet (approximately 24m). For higher interface speeds, the length of the serial cable should be shortened.

Long serial cables should also be avoided in areas with frequent lightning activity or static electricity build-up. Nearby lightning strikes or high levels of static electricity may lead to interface failure.

The Ethernet cable from the RFI-148/900250 to the Ethernet switch must be less than 10 metres long.

STI Engineering supplies a range of external data interface converters for applications requiring long cable runs.

2.2 External Antennas

Long antenna feed lines cause RF loss, both in transmission and reception levels, and degrade link performance. When long cable runs are required use a suitable low-loss cable.

As an example, RG58 (tinned-copper braid) will exhibit a loss of 7.1 dB / 30 m at 148 MHz – 174 MHz, whereas RG58 CellFoil will exhibit 3 dB less (4.2 dB / 30 m).

Antennas should not be located within close reach of people, due to radiation hazard. Exposure guidelines should be followed at all times.

Use extreme caution when installing antennas and follow all instructions provided. Because external antennas are subject lightning strikes, STI Engineering recommends protecting all antennas against lighting strike by using lightning surge arrestors.

2.3 Product Installation

The back panel of the AC model paging transmitter is shown below in Figure 1.

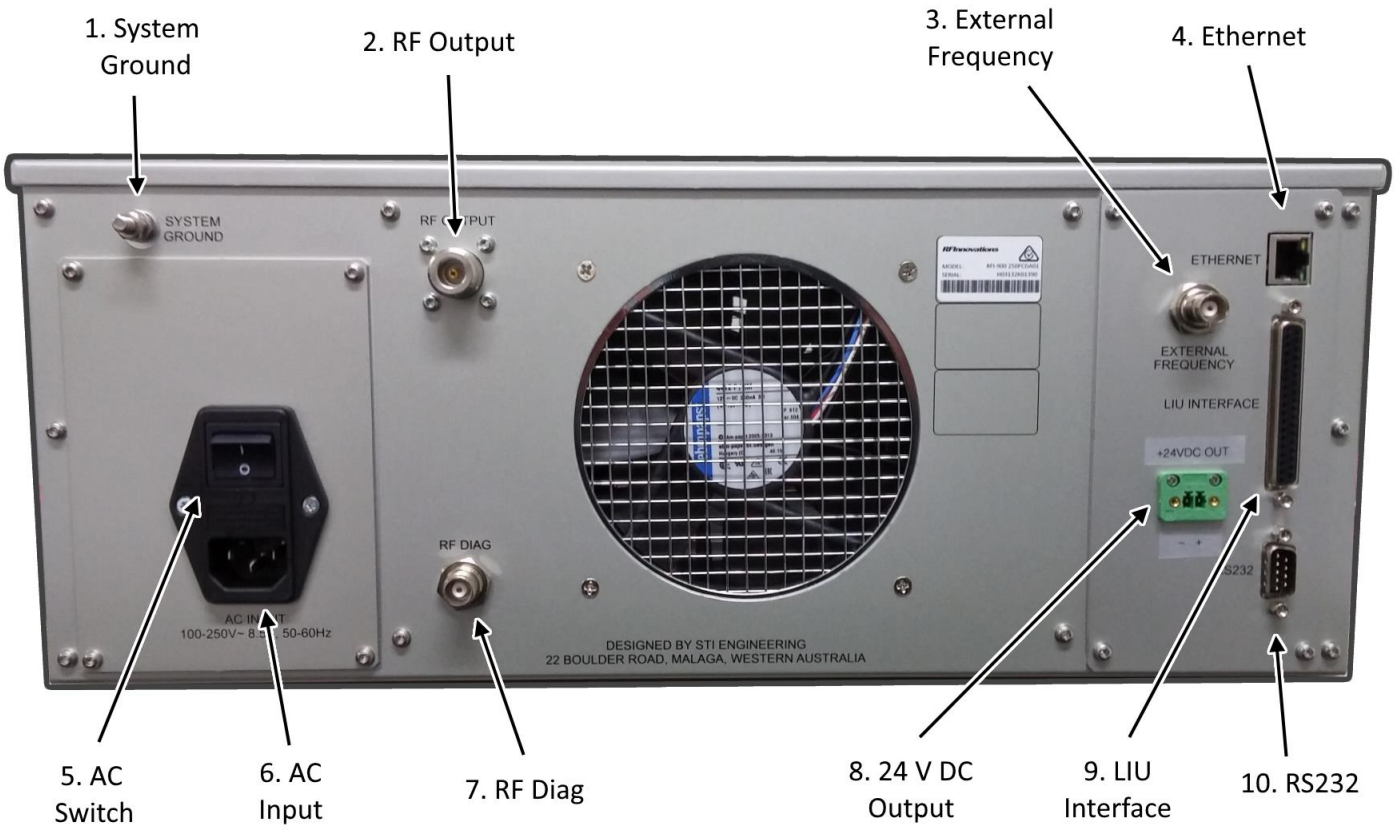

Figure 1: Paging Transmitter Back Panel (AC model shown)

1. ***System Ground:*** External connection for system ground. When connecting a 24 VDC supply the negative line is connected to the system ground. When connecting a -48 VDC supply the positive line is connected to the system ground

2. ***RF Output:*** Modulated RF output from the paging transmitter. N-type female connector.

3. ***External Frequency:*** External reference input for accurate channel synthesis. BNC female connector.

4. ***Ethernet:*** Ethernet connection for configuration and diagnostics over UDP. RJ45 connector. The Ethernet cable from the RFI-148/900250 to the Ethernet switch must be less than 10 metres long.

5. ***AC Switch:*** Power switch.

6. ***Power Supply Input:*** The power supply input is model-specific. The AC input connector is shown in Figure 1.

    a. 24VDC Model: 20 to 31.2 VDC input range for 24 V nominal. Phoenix terminal block connector.

    b. -48VDC Model: -40.5 to -57 VDC input range for -48 V nominal. Phoenix terminal block connector.

    c. 110/240VAC Model: 100 to 250 VAC, 50 to 60 Hz

7. ***RF Diag:*** Sniffer port for diagnostics. TNC female connector.

8. ***24V DC Output (RFI-900 only):*** Enabled via Cruise Control (*Encoder Interface → 24 V DC Output*), the RFI-900 can source up to 2A at 24V to an external load. Phoenix terminal block connector (plug supplied).

9. ***LIU Interface:*** Combined alarm and encoder interface. DC-37 female connector.

10. ***RS-232:*** Rear serial port.

    a. RFI-148: DE-9 male connector (DTE)

    b. RFI-900: DE-9 female connector (DCE).

2.3.1 Installation Guidelines to Ensure Safe Exposure Levels

The following installation guidelines ensure that safe exposure levels to radio frequency radiation are not exceeded:

1. Ensure the unit is switched off, and the mains power supply is unplugged.
2. Properly connect antennas, and RF cabling.
3. Connect other cabling, leaving power cables last.
4. Ensure that country and region specific safe distance limits are met before powering and operating the unit, using physical exclusion barriers if necessary.

2.3.2 Typical Installation

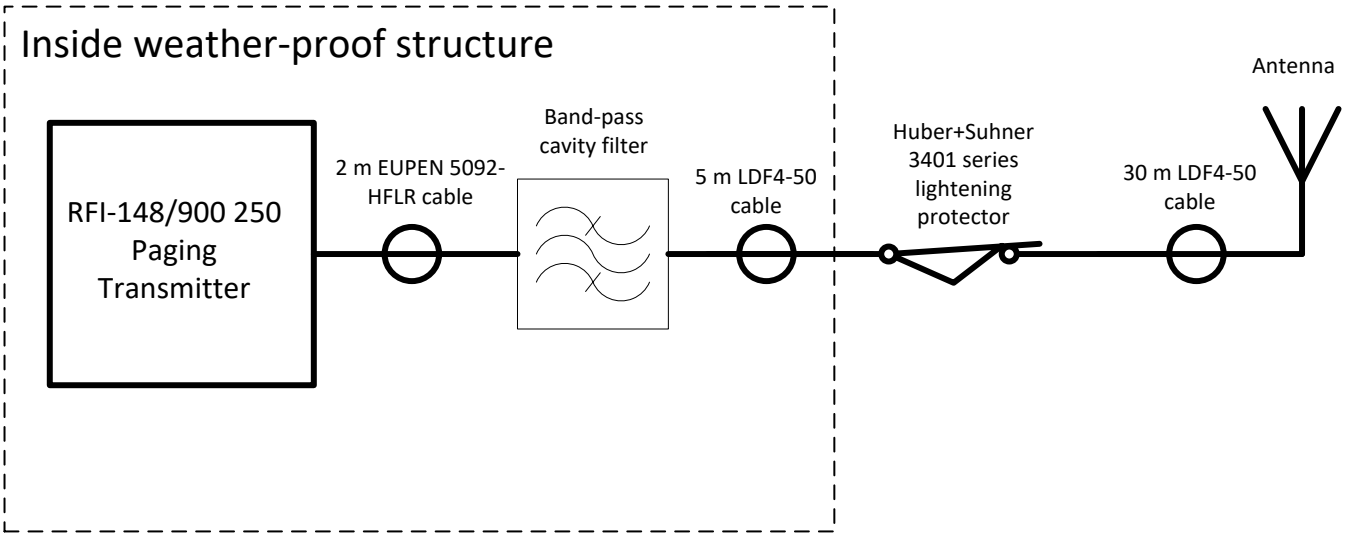

Figure 2: Typical installation components

In a typical installation the RFI-148/900 250 will be housed in a weather-proof structure. Inside the weather-proof structure a 2 m EUPEN 5092-HLFR cable will connect the antenna port of the RFI-148/900 250 to the input of a band-pass cavity filter (CV1417-0111-11 for RFI-148 or CV9296-0511-11 for RFI-900) . A 5 m run of LDF4-50 cable will connect to the output of the band-pass cavity filter, exit the weather-proof structure into the input of a Huber+Suhner 3401 series lightening protector mounted on the outside of the weather-proof structure. A 50 m run of LDF4-50 cable will connect to the output of the Huber+Suhner 3401 series lightening protector, run across to a 30 m antenna tower via a cable tray, then run up the tower to an antenna (COL36 for RFI148 or COL806 for RFI-900) mounted at the top. The installation is completely fenced off and secured with lock and key.

A clear installation will provide optimal radio signal propagation.

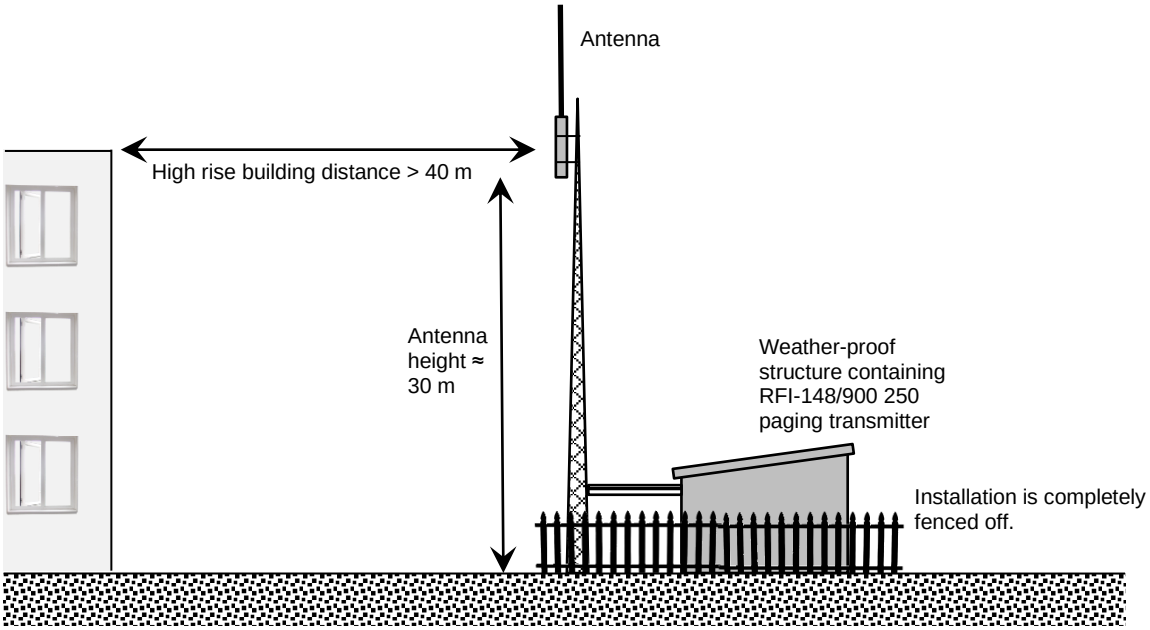

Figure 3: Typical installation site

2.4 Safety and Compliance

2.4.1 US

This device complies with Part 15 of the FCC Rules. Operation is subject to the following two conditions: (1) This device may not cause harmful interference, and (2) this device must accept any interference received, including interference that may cause undesired operation.

2.4.2 EU

OPERATION OF THE RFI-148 250 PAGING TRANSMITTER IN EU MEMBER STATES

The RFI-148 250 Paging Transmitter is designed to be used to provide paging services. The RFI-148 250 Paging Transmitter can only be used to provide paging services after obtaining a radio channel license within the 147 – 174 MHz frequency band from the corresponding member state government Radiocommunications Authority.

HUMAN EXPOSURE TO EMISSIONS, SAFE DISTANCES

RF radiation source	Safe distance	Notes
RFI-148 250 mechanical enclosure	> 15 cm	
Transmit signal RF cabling	> 15 cm	
Antenna < 6 dBi gain	> 7 m	These distances are used to determine the minimum antenna height and distance to nearest high-rise habitable structures
Antenna < 8 dBi gain	> 8 m	
Antenna < 10 dBi gain	> 10 m	
Antenna < 12 dBi gain	> 13 m	
Antenna < 14 dBi gain	> 16 m	

Table 1: Human exposure to emissions, safe distances

For further information on human RF exposure, contact your local health department.

EQUIPMENT INSTALLATION

Any devices that connect to the data ports must comply with clause 4.7 of EN 60950-1.

The installation should be in accordance with EN 50310:2010.

2.4.3 Canada

This device complies with Industry Canada's RSSs. Operation is subject to the following two conditions:

(1) This device may not cause interference; and

(2) This device must accept any interference, including interference that may cause undesired operation of the device.

Le présent appareil est conforme aux CNR d'Industrie Canada. L'exploitation est autorisée aux deux conditions suivantes :

(1) l'appareil ne doit pas produire de brouillage;

(2) l'appareil doit accepter tout brouillage radioélectrique subi, même si le brouillage est susceptible d'en compromettre le fonctionnement.

RF MPE SAFE DISTANCE CALCULATIONS AND APPROVED ANTENNA/TRANSMIT POWER COMBINATIONS

RSS-119 limits the RFI-148 250 transmitter power to 110 W and SRSP-500 section 6.3 has an *ERP* limitation of 125 W which is an *EIRP* limitation of 205 W.

Antenna	Gain (dBi)	Gain	Transmit power (W)	EIRP (W)	EIRP max (W)	Safe Distance at 153.5 MHz	
						Occupational / Controlled Exposure	General Public / Uncontrolled Exposure
RFI Wireless SMD2	2	1.58	110	173.8	174	> 1.4 m	> 3.3 m
RFI Wireless COL35	5	3.16	60	189.6	205	> 1.5 m	> 3.6 m
RFI Wireless COL36	6.6	4.57	40	182.8	205	> 1.5 m	> 3.6 m
RFI Wireless YH03	8	6.31	30	189.3	205	> 1.5 m	> 3.6 m
RFI Wireless YH04	9	7.94	25	198.5	205	> 1.5 m	> 3.6 m

Table 2: MPE safe distance calculations with approved antenna/transmit power combinations

For further information on human RF exposure, contact your local health department.

FREQUENCY BAND

RSS compliance is currently limited to the 153.5 – 159.5 MHz frequency band.

2.4.4 Modifications

CAUTION: Changes or modifications not expressly approved by STI Engineering will void the user's authority to operate the equipment legally, as well as any warranty provided.

3. Configuration

3.1 Overview

There are six interfaces available for configuration and diagnostic information to be monitored:

- ***Cruise Control management interface:*** All configuration and diagnostics parameters can be accessed using the Windows-based Cruise Control Graphical User Interface (GUI).
- ***SNMP interface:*** Support for diagnostics using SNMP through the RFI SNMP Proxy agent.
- ***Terminal menu interface:*** A navigable menu system is available that has all the configuration and diagnostics that Cruise Control provides.
- ***AT command interface:*** The AT command interface provides a subset of the configuration and diagnostic information available over Cruise Control with ASCII Hayes attention commands. For a list of AT commands see Appendix D Hayes AT Reference.
- ***Front panel interface:*** The front panel consists of six status LEDs and a transmit power gauge.
- ***LIU interface:*** The combined LIU interface has digital inputs and alarm outputs for limited configuration and diagnostic output.

3.2 Cruise Control

This section outlines how to use Cruise Control with the paging transmitter. For more information see the Cruise Control User Manual. Figure 4 below is a screenshot of Cruise Control running on Windows 10.

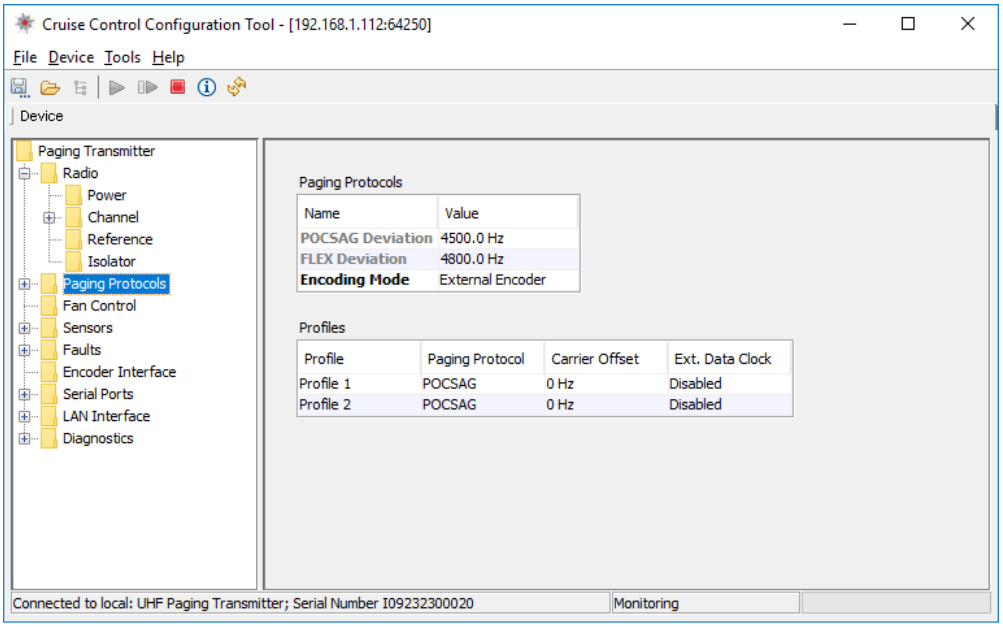

Figure 4: Cruise Control Interface

3.2.1 Installation

The requirements for using the Cruise Control application are:

- Pentium III+ Processor.
- Windows XP (x86) or Windows 7 (x86 and x64).
- At least 1 available serial port or a network connection to the device.

3.2.2 Connecting to the Paging Transmitter

SERIAL

To connect to a device with RS-232, attach the paging transmitter to the PC running Cruise Control via a serial port. Configure the Cruise Control communication settings using `Device -> Configure Communications`, ensure that `Serial` is selected from the dropdown box and enter in the serial settings (The front serial port is locked to 19200 8N1).

Use the `Device -> Connect to Local Device` menu item to connect to the local device.

ETHERNET

To connect to a device over a network, the device IP address must be known. Configure the Cruise Control communication settings using `Device -> Configure Communications`, ensure that `UDP` is selected from the dropdown box and enter the device IP address. For the UDP port, enter 64250, 64251 or 64252.

The paging transmitter listens on UDP ports 64250, 64251 and 64252 for data and will not allow more than one simultaneous session per port. If the paging transmitter does not respond to Cruise Control on a UDP port, try another port as a connection could already be active on that port.

Use the `Device -> Connect to Local Device` menu item to connect to the device.

3.2.3 Device Navigation

Once all the settings have been downloaded from the device, the available configuration groups are displayed in a tree on the left. Items that can be configured in each group are displayed in tables on the right. The names of editable items are displayed in black. Read only items have their names in grey.

3.2.4 Sensor Gauges

Cruise Control can provide real-time operational information for paging transmitters using the Sensor Gauges plugin. A screenshot of the Sensor Gauges plugin is shown below in Figure 5.

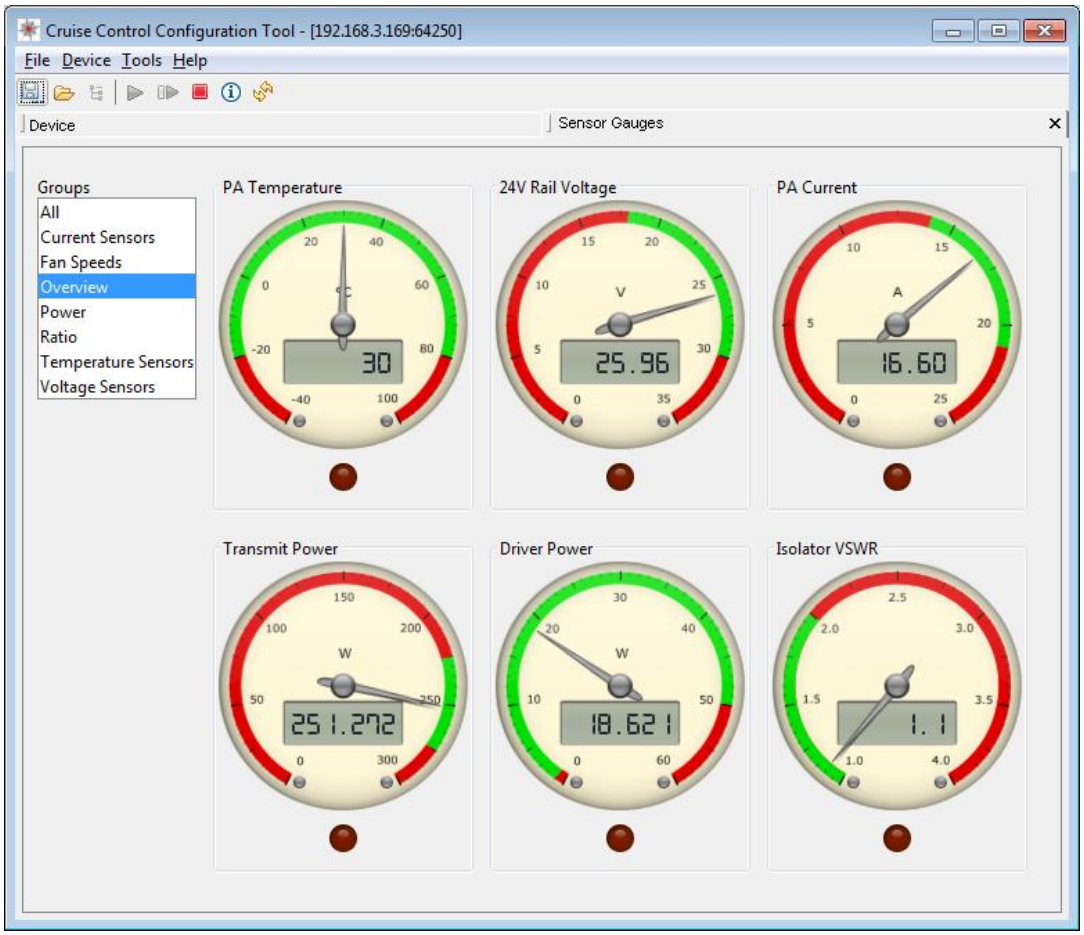

Figure 5: Cruise Control Sensor Gauges Plugin

To view Sensor Gauges for a paging transmitter, first connect to the paging transmitter using Cruise Control. Then use the `Tools -> Plugins -> Sensor Gauges` menu item to open the Sensor Gauges plugin.

The Sensor Gauges will automatically update, with the needles showing the current value of the gauge parameter. The green region indicates the expected normal operating value for the parameter. The upper and lower cut-off values for the sensor (see Appendix E) determine the range of the green region. There is a red indicator below each gauge which turns on when the parameter exceeds the upper or lower cut-off value.

The Groups option box on the left shows the different groups of gauges available, grouped by the unit of measurement of the sensor. There are also two additional groups, overview and all. The overview group provides a subset of the most informative gauges for quick diagnostic troubleshooting. The all group shows all of the gauges.

3.2.5 Firmware Update

Cruise Control supports the updating of device firmware. Cruise Control will only allow firmware images that are compatible with the paging transmitter to be uploaded. For more information, see Appendix F.

3.3 SNMP

RFI SNMP Proxy is an SNMP agent which allows configuration and diagnostics via SNMP. RFI SNMP Proxy can be installed on a Windows or Debian Linux system, including embedded devices capable of running Linux.

In smaller networks, RFI SNMP Proxy may be run on the same machine as an SNMP network monitoring application. SNMP communication may be done via IP loopback as shown in Figure 6. Alternatively, RFI SNMP Proxy may run on existing embedded devices connected to the transmitter by Ethernet, as shown in Figure 7.

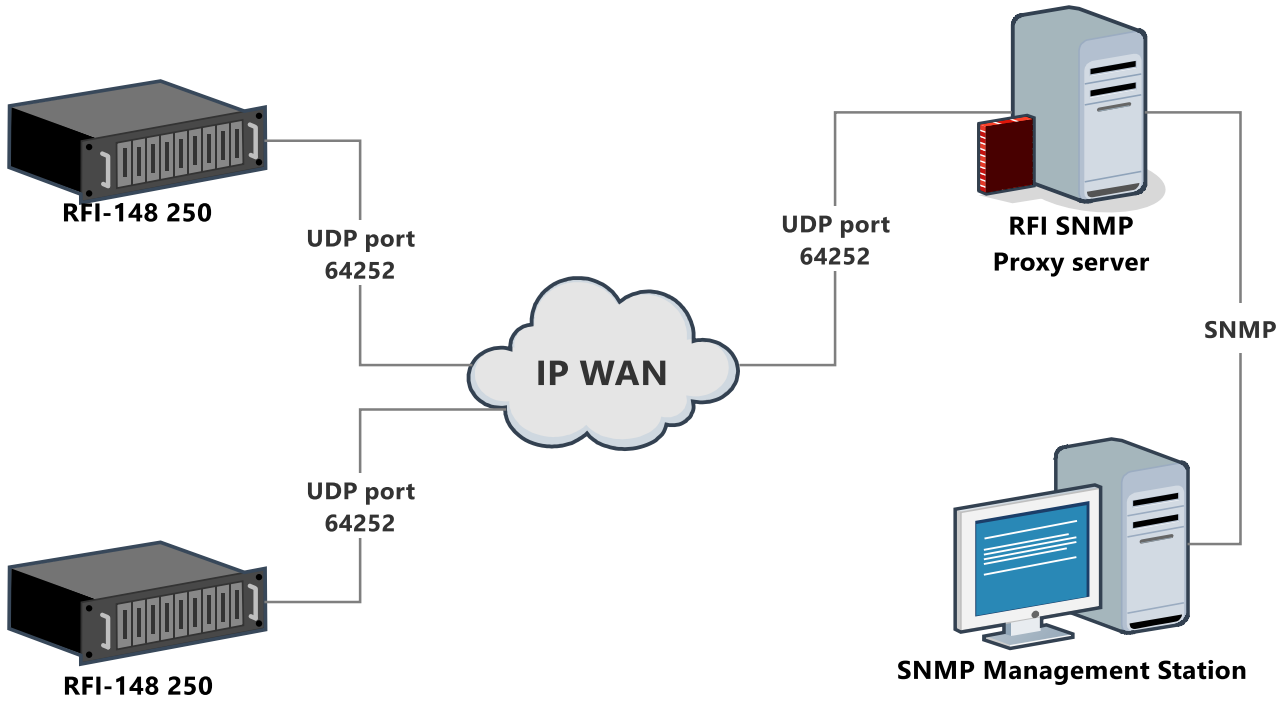

Figure 6: RFI SNMP Proxy running on a central server

SNMP versions 1 and 2c are supported. The community string 'public' should be used when issuing SNMP requests. RFI SNMP Proxy is compatible with standard SNMP managers and other SNMP client applications. An SMI MIB file defining OIDs for this product is available from STI Engineering.

RFI SNMP Proxy communicates with the paging transmitter via a proprietary protocol using UDP port 64252 through the Ethernet interface.

Not all configuration and diagnostic parameters may be accessed via SNMP. See Appendix C.2 for a list of values which may be accessed via SNMP.

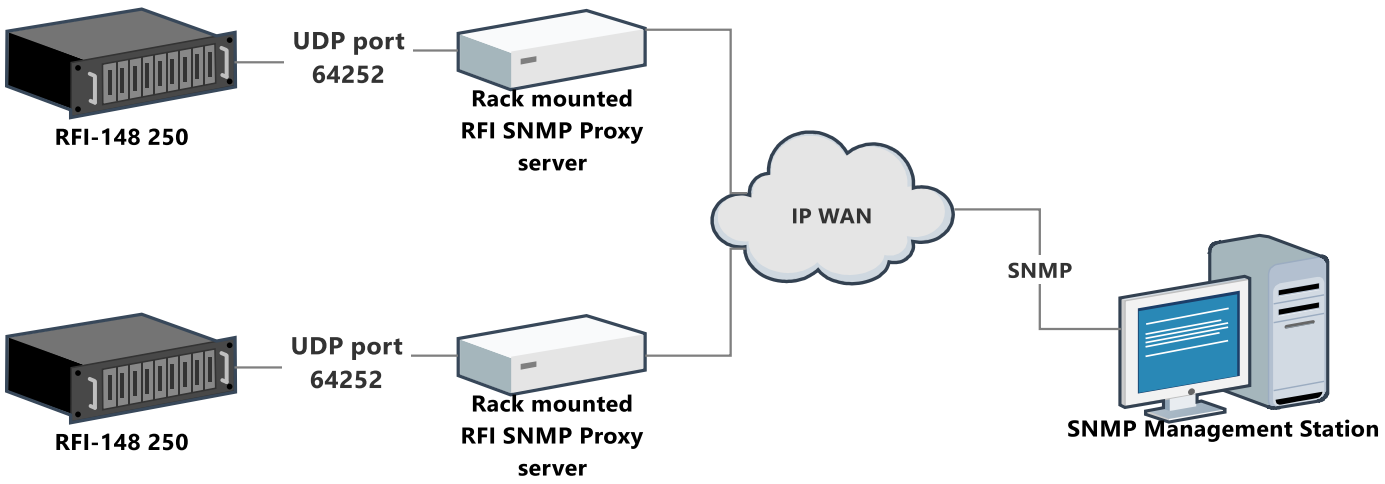

Figure 7: RFI SNMP Proxy running on embedded hardware on remote sites

3.4 Terminal Menu Interface

The terminal menu provides access to all configuration parameters in the radio.

To access the terminal menu execute the `AT?` command at the Hayes AT command interface. See section 3.5 on page 19 for information on executing AT commands. The terminal menu will not be started if it is open on another port, instead the `BUSY` response is returned.

The terminal menu is available over serial, UDP (ports 64250 and 64251) and TCP (ports 23 and 64250).

3.5 Hayes AT Command Interface

The paging transmitter supports Hayes ATtention commands. These are used to query and change device configuration and probe performance parameters. AT commands are available via serial port, and via TCP ports 23 and 64250 on the Ethernet interface.

The format for the query and configuration AT command is:

```
ATxxx<[I1, I2, … In]><=value><TERM>
```

Where:

- `AT` is the attention code. All AT commands must be prefixed with `AT`. This is case insensitive, so `At`, `aT`, or `at` can also be used.
- `xxx` is the actual command. The list of valid AT commands is given in Appendix D on page 71.
- `<[I1, I2, … In]>` is an optional section that allows the specification of an index. Indexes are used to access one of an array of similar items. For example, the paging transmitter has a list of sensor values which can be accessed using the `ATI90` indexer. The command `ATI90[0]` will read the PA temperature, while the command `ATI90[1]` will read the driver temperature.
- `<=value>` is an optional section that is used to set the value of a configuration parameter. If this section is omitted, then the value of the configuration parameter will be displayed.
- `<TERM>` is the terminator for the AT command. A terminator can consist of a carriage return (ASCII value $13_{Decimal}$) or a carriage return followed by a line feed (ASCII value $10_{Decimal}$).

A response is generated for each AT command issued. Responses to AT commands are shown in Table 3.

Response Code	Response Number	Description
OK	0	Returned whenever a command is entered that is executed correctly.
ERROR	4	Returned whenever a command is invalid or could not be executed.
BUSY	7	Returned when an attempt is made to enable the menu via AT? but the menu system is already enabled on the other serial port.

Table 3: AT command response codes

3.5.1 List Slicing Syntax

Multiple indexes of an indexer can be queried in a single AT command using the list slicing syntax. AT command sets cannot be used with the list slicing syntax. The list slice syntax uses the colon ':' operator to indicate a range of indexes to retrieve. Each value retrieved is printed on a new line.

For example, the AT command for retrieving a single sensor value is I90[*n*] where *n* is the index of the sensor. To retrieve the first four sensor values (PA, Driver, PA Ambient, and Isolator temperatures) the following syntax can be used:

```
ATI90[0:3]
45
42
39
30
OK
```

Figure 8: List slicing syntax on the current sensor value

Running the list slice operator ':' without specifying the range will return the length of the indexer:

```
ATI90[:]
27
OK
```

Figure 9: List slicing syntax for the length of an indexer

3.5.2 Sequenced AT Commands

A series of get AT commands can be concatenated into a single AT command, known as a sequenced AT command. AT command sets cannot be sequenced. A sequenced AT command begins with the attention code, AT, followed by a number of commands, followed by the terminator.

For example, the AT commands for the serial number, current channel, and main serial port baud rate are I6, S54 and S100[0], respectively. These commands can be run separately:

```
ATI6
F00012K01000
OK

ATS54
1
OK

ATS100[0]
8
OK
```

Figure 10: Separate AT commands

Alternatively, they can be concatenated and run as a sequenced command:

```
ATI6S54S100[0]
F00012K01000
1
8
OK
```

Figure 11: Sequenced AT command

3.6 Front Panel Interface

The front panel interface consists of six status LEDs and a transmit power gauge. The panel is illustrated in Figure 12 and the function of each LED is described in Table 4.

LED	Colour	Description
Transmit On	Green	Turns on when the transmitter is on.
Fault	Red	Turns on when any fault is active. Will flash in unison with the Serial/Ethernet LED if there are serial errors.
Low Power	Red	Turns on when the sensed transmit power is lower than the lower cut-off value as specified in the sensor parameters.
High VSWR	Red	Turns on when the isolator VSWR is higher than the higher cut-off value as specified in the sensor parameters.
Serial/Ethernet	Green	Flashes when serial or Ethernet data is transmitted or received.
Power	Green	Turns on/off at 1 Hz while power is supplied.
Power Gauge	Green/Red	A bar graph displaying current transmit power.

Table 4: Front panel LED descriptions

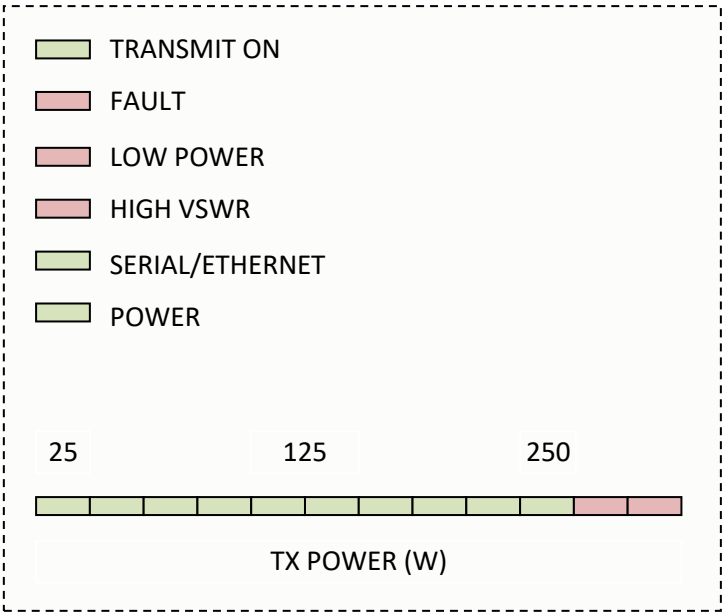

Figure 12: Front Panel Display

3.7 LIU Interface

The LIU interface is a DC-37 female connector at the rear of the paging transmitter. The pin-out for the LIU Interface can be found in Appendix A.4. The LIU interface has ten digital inputs[1] and fourteen alarm outputs. The alarm outputs are numbered 1 to 13 with an additional combined alarm and are configurable. The digital inputs are:

- Frequency Select 1
- Frequency Select 2
- Frequency Select 3
- Frequency Select 4
- Protocol Select
- Hardware PTT
- Tx Data L-bit
- Tx Data H-bit
- Transmit Clock
- Aux Input 1 (RFI-148 only) – can be configured to trigger a fault
- Aux Input 2 – can be configured to trigger a pre-defined page event

Use of the hardware PTT, protocol select and frequency select inputs are all optional and may be disabled in software. The use of the transmit clock is optional for 2-level protocols, but required for 4-level protocols.

[1] RFI-148 has an extra, general purpose input "Aux Input 1," for a combined total of 11.

3.7.1 Hot Standby

For those RFI-148/RFI-900 that support it (refer to the product order codes in Appendix F), some LIU pins are re-purposed, as shown in Table 5. The 'lost' alarms 11, 12 and 13 are made available when Hot Standby mode is disabled. Refer also to 7.5.

Pin Number	Direction	Default function	Hot Standby function
4	Output	Alarm 11	PHSB MISSING - External PHSB unit is missing/not detected
23	Output	Alarm 12	IN STANDBY - The transmitter is waiting for permission to go active.
24	Output	Alarm 13	IS PRIMARY – this is the primary transmitter of the redundant pair.
17	Input	LIU detection	CAN GO ACTIVE (HW) – the hardware means of readying the transmitter for operating in Hot Standby mode

Table 5:- LIU pin repurposing for Hot Standby support

3.7.2 Analogue Paging

Units that support the Analogue Paging feature repurpose certain LIU pins when this feature is enabled, as identified in Table 6. When the feature is disabled, these pins are reallocated to their default function. Refer to 8.2.1 for more information.

Pin Number	Direction	Default function	Analogue function
5	Input	CHAN 4	Audio +
6	Input	CHAN 3	Audio -
13	Input	Aux 1	Analogue/Digital Select

Table 6:- LIU pin repurposing for Analogue Paging support.

4. Operation

4.1 Serial Port Operation

`Serial Ports -> [Rear|Front] Settings`

4.1.1 Overview

The RFI-148/900250 has two RS-232 serial ports, providing support as shown in Table 1. The serial port pin-outs can be found in Appendix A.3 on page 59.

Serial Ports			
Front	**Connector Type**	Female DE9 (DCE)	
	Supported	TX, RX, GND.	
Rear	**Connector Type**	**RFI-148**	**RFI-900**
		Male DE9 (DTE)	Female DE9 (DCE)
	Supported	TX, RX, and GND, RTS and DTR outputs CTS and DCD inputs	

Table 7: Serial port availability.

4.1.2 Configuration

The rear serial port supports the following configuration options:

- Baud rate: 300, 600, 1200, 2400, 4800, 9600, 19200, 38400, 57600 or 115200.
- Data bits: 7 or 8.
- Parity: None, odd, or even.
- Stop bits: 1 or 2.

The front serial port is locked into a specific configuration to ensure a fail-safe way to communicate with the paging transmitter:

- Baud rate: 19200.
- Data bits: 8.
- Parity: None.
- Stop bits: 1.

4.1.3 Statistics

Statistics are maintained for both serial ports. These statistics are listed in Table 30 in Appendix C. All statistics are reset if power is removed.

These statistics may be useful in troubleshooting. For example, Rx framing errors may indicate that the serial port configuration does not match the serial port configuration of the link partner.

4.2 Ethernet Operation

LAN Interface

4.2.1 Overview

The paging transmitter has one 10BASE-T/100BASE-TX Ethernet port. Auto-negotiation of link speed is supported, including duplex mode. There is also a software override for forcing the parameters of the link.

4.2.2 IP Addressing

The paging transmitter supports IPv4. The paging transmitter may have a statically assigned IP address or obtain an IP address as a DHCP client.

A static IP address may be configured with a single static address. A subnet mask and default gateway may be configured to allow communication across sub-networks.

The paging transmitter may act as a DHCP client. This allows a DHCP server to assign an IP address to the paging transmitter. By default, the DHCP client is enabled and the hostname of the paging transmitter is of the form "rfi-*serial_number*" where *serial_number* is the factory assigned serial number of the unit. If the unit does not receive an IP address from the DHCP server, the IP interface will not work.

4.2.3 Statistics

Both IP and Ethernet packet statistics are independently recorded and presented as combined figures for all active data streams since the transmitter was last powered-up. A power-cycle of the transmitter clears this data.

4.3 Transmitter Operation

4.3.1 Transmit Power

Radio -> Power

The RFI-148/900250 supports transmit power from 20 to 250 Watts in 1 Watt increments. The Canadian release of the RFI-148 250 is software limited from 20 to 110 Watts in 1 Watt increments.

POWER FOLDBACK

The power foldback is a configurable percentage which calculates the power to foldback to when the scale transmit power fault action is latched. For example, for a transmit power of 250 W and a power foldback of 50%, the transmitter will transmit at 125 W when the scale transmit power fault action is latched. See section 5.2.1 for more information on fault actions.

4.3.2 Channel Selection

Radio -> Channel

The RFI-148/900250 has up to sixteen radio channels. Each channel represents a transmit frequency.

The channel frequencies can be set anywhere within the radio switching bandwidth, but their difference from the lower limit of the switching bandwidth must be an integer multiple of the raster frequency.

The channel to be used can be set by adjusting the current channel setting.

A channel width option of 6.25kHz is available, in addition to the regular 12.5kHz and 25kHz options, but this "Ultra-Narrow" band option must be explicitly requested, by indicating "UN" in the product order code (refer to Appendix F).

ENCODER CHANNEL CONTROL

`Encoder Interface -> Encoder Channel Control`

The active channel can be set by adjusting the current channel setting in software. Alternatively, "Encoder Channel Control" may be enabled and the channel set through the LIU interface as shown in Table 8 below where N/C abbreviates *Not Connected*. If encoder channel control is used, the channel cannot be changed in software.

Channel	CH4	CH3	CH2	CH1
1	N/C	N/C	N/C	N/C
2	N/C	N/C	N/C	Gnd
3	N/C	N/C	Gnd	N/C
4	N/C	N/C	Gnd	Gnd
5	N/C	Gnd	N/C	N/C
6	N/C	Gnd	N/C	Gnd
7	N/C	Gnd	Gnd	N/C
8	N/C	Gnd	Gnd	Gnd
9	Gnd	N/C	N/C	N/C
10	Gnd	N/C	N/C	Gnd
11	Gnd	N/C	Gnd	N/C
12	Gnd	N/C	Gnd	Gnd
13	Gnd	Gnd	N/C	N/C
14	Gnd	Gnd	N/C	Gnd
15	Gnd	Gnd	Gnd	N/C
16	Gnd	Gnd	Gnd	Gnd

Table 8: Channel selection via LIU Interface

4.3.3 Push-To-Talk (PTT)

There are three methods available to turn the transmitter on:

- ***Software PTT:*** Software PTT is available using Hayes AT commands, through the Cruise Control GUI, or through the terminal menu interface. It is also selected implicitly when enabling TNPP or PET/TAP on either a serial or Ethernet stream.

- ***Hardware PTT:*** Hardware PTT is available through the LIU connector. Hardware PTT can be configured to be active high or active low. The delay from hardware PTT to transmitter on and data ready is 10 ms.

- ***Auto PTT:*** Auto PTT is performed by detecting a change in the data bits on the LIU and turning on the transmitter. When using auto PTT some preamble will be lost; some encoders may need to increase preamble time.

Hardware PTT can be enabled using the "Encoder Hardware PTT" option and auto PTT can be enabled using the "Auto PTT" option in the "Encoder Interface" menu. Hardware PTT and auto PTT cannot both be enabled at the same time.

PTT TURN OFF DELAY

`Radio -> PTT Turn Off Delay`

The unit has the option to leave the transmitter on for a set duration after receiving a PTT off signal. This delay is driven by software and typically accurate to 100 ms.

TRANSMIT TIMEOUT

`Radio -> Transmit Timeout`

The unit can automatically raise a fault if the transmitter has been transmitting for too long. By default, the transmit timeout feature is disabled. If enabled, the transmit timeout fault causes the transmitter to key down and set the PTT system override to disable transmit. See section 5.2.1 for more information on fault actions.

PTT OVERRIDE

`Radio -> PTT Override`

Transmitter PTT can be completely disabled which stops the paging transmitter from transmitting. PTT override can be changed using the "PTT override" setting.

In some cases the paging transmitter will disable itself from transmitting. If PTT override is disabling transmit the "PTT Override Status" will describe what caused the override. There are five circumstances where the paging transmitter will override PTT:

- ***User:*** The PTT override has been configured to "Disable Transmit".

- ***Listening:*** The isolator mode is set for listening (for operation of the isolator see section 4.3.6).

- ***Fault:*** The disable transmit fault action is active (for more on fault actions see section 5.2.1).

- ***Loading Config:*** Cruise Control is loading a configuration file.

- ***In Standby:*** The unit is in Standby due to the Hot Standby operation (see section 7).

PTT is enabled once the source of the override is addressed.

HARDWARE PTT EDGE OR LEVEL DETECTION

The transmitter keys up due to the rising or falling edge of the hardware PTT signal – it is based on edge detection rather than sampling. However, there are three exceptions to this case where the hardware PTT signal is sampled to check for key up:

- When the unit powers up.
- When the hardware PTT configuration is changed from Disabled to Enabled.
- When the unit comes out of PTT Override.

4.3.4 External Reference

`Radio -> Reference`

The transmitter supports an external reference for channel frequency generation.

To use the external reference, a 5 or 10 MHz sine or square wave -20 dBm to +15 dBm signal must be applied to the "External Frequency" input BNC connector on the back panel. The *Reference Mode* supports four options:

- ***Internal:*** The internal reference is used. External reference is ignored and will not cause faults.
- ***External With Failover:*** The external reference is used where possible. If the external reference is disconnected, has out of spec amplitude, or drifts too far from the internal reference (or vice versa) then the PTX will switch to the internal reference immediately. If the unit is transmitting at the time of reference switchover, there may be data loss. The switchover is latched, and therefore the *Clear All Faults* routine must be executed (through Cruise Control or AT command) before the PTX will attempt to switch to the external reference. This mode is intended for use with reliable reference sources that fail rarely, since user intervention is required to restore normal PTX behaviour.
- ***External When Available:*** The external reference is used where possible. If the external reference is disconnected, has out of spec amplitude, or drifts too far from the internal reference (or vice versa) then the PTX will switch to the internal reference immediately. If the unit is transmitting at the time of reference switchover, there may be data loss. The switchover is *not* latched and, therefore, restoration of a quality external reference source will cause the PTX to revert to using the external reference without user intervention. To minimise data loss, use of the external reference will not be restored until the PTX has stopped transmitting. This mode is intended for use with less reliable reference sources that fail more frequently, or for installations that are difficult or impractical to remotely monitor and control, since user intervention is not required to restore normal PTX behaviour
- ***External Only:*** The external reference becomes a pre-requisite for transmission. If the external reference is disconnected, has out of spec amplitude, or drifts too far from the internal reference (or vice versa) then the PTX will disable all PTT sources thereby stopping any transmission. When the external reference is restored the PTX re-enables PTT sources and continues transmission – without any intervention.

The external reference frequency must be configured correctly in order to lock to the external reference (*Radio -> Reference -> Ext. Ref. Frequency*). By default, the external reference is configured to 10 MHz but 5 MHz is also supported.

4.3.5 Absolute Delay Adjustment

`Radio -> Absolute Delay Adjustment`

The paging transmitter can insert a small artificial delay on data presented on the LIU interface before it is passed to the digital synthesiser. The delay adjustment can be set from 0 to 40 ms in 5 µs steps. The additional net delay is accurate to ± 3 µs.

Absolute delay adjustment can be used for matching delay in:

- Simulcast networks where transmitters from different manufacturers are used.
- Radio and leased line simulcast systems.

4.3.6 RF Diagnostics

`Radio -> Isolator`

The paging transmitter provides an RF diagnostics port output on the back panel. The RF diagnostics port can be configured for two different modes using the "Isolator Mode" setting:

- ***Set for Transmitting:*** The RF diagnostics port will output a signal identical to that of RF out but at a much lower power level.
- ***Set for Listening:*** Insertion loss from RF out to RF diag is decreased to 12 dB. This is a special mode of operation used for network testing. **NOTE:** While in listening mode, PTT override is forced to disable transmit.

LISTEN MODE TIMEOUT

A timeout can be enabled for listening mode. When the listening mode timeout is enabled, the isolator mode will automatically revert to transmitting mode after the timeout expires. The timeout starts when the isolator mode is set to listening mode. By default, the listening mode timeout is disabled.

ISOLATOR FEEDBACK

The isolator feedback is a read-only field that indicates the isolator status when the isolator is in listening mode. When the isolator mode is set to listening, the feedback status will change to "Switching" for one second and then change to "Listening Mode". However, if the status changes to "Listening Failure" then there may be a hardware failure of the mechanical attenuation switch-out.

4.4 Data

Paging data that is to FSK modulate the carrier is externally input from the L-bit and H-bit pins on the LIU connector. The data encoding implemented by the RFI-148/900 250 is controlled by the *Paging Protocol* and the *Data Invert*. A third parameter, *4-Level Operation*, only applies when a 4-level FSK modulation format is selected. This is described in the following sections.

4.4.1 Modulation Formats

`Paging Protocols -> Profiles-> Paging Protocol`

The RFI-148/900250 supports the following modulation formats:

- ***POCSAG:*** Baud rates of 512, 1200 and 2400 bps (2-level FSK) are supported.
- ***FLEX-2:*** Baud rates of 1600 and 3200 (2-level FSK) are supported.
- ***FLEX-4:*** Baud rates of 3200 and 6400 bps (4-level FSK) are supported.
- ***Custom:*** A customizable deviation and FSK level at baud rates up to 6400 bps. See section 4.4.6.

2-level FSK protocol data may optionally be clocked into the paging transmitter using the external data clock or may run asynchronously. 4-level FSK protocols must use the external data clock.

4.4.2 Inversion

`Encoder Interface -> Data Invert`

The data that is input on the L-bit and H-bit pins can be inverted using the *Data Invert* field. The deviation mapping produced by this described in the following sections.

4.4.3 2-Level Deviation Mapping

When using 2-level FSK i.e. when POCSAG, FLEX-2 or Custom 2-level is selected in *Profiles -> Paging Protocol*, only data on either the H- or L-bit is transmitted and the deviation with respect to the H and L bits is outlined in Table 9 below where N/C abbreviates *Not Connected*. N/C represents data *1* and Gnd represents data *0*.

L-bit	H-bit	Deviation from Carrier (Hz)			
		2-Level Data = L-bit		2-Level Data = H-bit	
		Normal	Inverted	Normal	Inverted
N/C	N/C	$-F_d$	$+F_d$	$-F_d$	$+F_d$
N/C	Gnd	$-F_d$	$+F_d$	$+F_d$	$-F_d$
Gnd	N/C	$+F_d$	$-F_d$	$-F_d$	$+F_d$
Gnd	Gnd	$+F_d$	$-F_d$	$+F_d$	$-F_d$

Table 9: 2-level deviation frequency offsets

Where F_d is the deviation frequency in Hz.

Standard 2-level Flex™ requires that FLEX-2 is selected with *Data Invert -> Inverted*.

Use of the H- or L- bit is configurable via *Encoder Interface → 2-Level Data*. The configurability of the 2-level data pin was introduced in firmware 4.5; versions prior to this operate with L-bit as the 2-level data pin.

4.4.4 4-Level Deviation Mapping

`Encoder Interface -> 4-Level Operation`

When using 4-level FSK i.e. FLEX-4 or Custom 4-level is selected in *Profiles -> Paging Protocol*, the deviation with respect to the H and L bits is outlined in Table 10 below. Note that two interpretations of the H-bit/L-bit are available, denoted as *Legacy* and *Normal* and configurable via *Encoder Interface → 4-Level Operation*. The *Legacy/Normal* operation was introduced in firmware 4.0. Firmware versions prior to this operate implicitly in *Legacy* mode.

L-Bit (MSB)	H-bit (LSB)	Deviation from Carrier (Hz)			
		Normal		Inverted	
		Normal	Legacy	Normal	Legacy
N/C	N/C	$+\frac{F_d}{3}$	$+\frac{F_d}{3}$	$-F_d$	$-F_d$
N/C	Gnd	$+F_d$	$-\frac{F_d}{3}$	$-\frac{F_d}{3}$	$+F_d$
Gnd	N/C	$-\frac{F_d}{3}$	$+F_d$	$+F_d$	$-\frac{F_d}{3}$
Gnd	Gnd	$-F_d$	$-F_d$	$+\frac{F_d}{3}$	$+\frac{F_d}{3}$

Table 10: 4-level deviation frequency offsets

Where F_d is the deviation frequency in Hz.

Standard 4-level Flex™ requires that FLEX-4 is selected with *Data Invert -> Normal* and *4-Level Operation -> Normal*. With this configuration the **L-bit is kept the MSB** and the **H-bit is the LSB.**

4.4.5 FLEX™ Operation

Standard 2 and 4 level FLEX™ operation can be implemented in several ways. The first is as described previously in 4.4.3 and 4.4.4. The alternate method is as follows:

1. The LIU connector is wired with the L-bit as the MSB and the H-bit as the LSB.

2. The FLEX-4 protocol is selected by *Profiles -> Paging Protocol -> FLEX-4* with *Data Invert -> Normal* and *4-Level Operation -> Normal*.

3. 2-level FLEX™ is enabled by pulling the H-bit to Gnd otherwise 4-level FLEX™ is enable.

FLEX™ OPERATION FOR LEGACY SYSTEMS

For legacy systems which have firmware older than 4.0, the MSB and the LSB need to be swapped and the configuration is as follows:

1. The LIU connector is wired with the H-bit as the MSB and the L-bit as the LSB.
2. The FLEX-4 protocol is selected by *Profiles -> Paging Protocol -> FLEX-4* with *Data Invert -> Normal*.
3. 2-level FLEX™ is enabled by pulling the L-bit to Gnd otherwise 4-level FLEX™ is enable.

4.4.6 Custom Deviation

`Paging Protocols -> Advanced`

The transmitter supports generation of non-standard paging protocol settings by selecting *custom* in the *Profiles -> Paging Protocol* option (see 0). A custom deviation and either 2 or 4 level FSK can be set and used for that protocol. The custom deviation setting is useful for legacy paging systems with non-standard protocols and/or paging receivers.

4.4.7 Carrier Offset

`Paging Protocols -> Profile [1|2] -> Carrier Offset`

The carrier offset setting is provided for use in simulcast paging networks. The offset from the carrier frequency can be specified for each protocol. The carrier offset can be set from +4000 to -4000 Hz in increments of 1 Hz.

4.5 Fan Control

`Fan Control`

The transmitter has two fans for cooling; the front fan is an intake and the rear fan is the exhaust. The fans turn on at the configured fan turn on temperature, and then turn off at the configured fan turn off temperature. The temperature reference is configurable to either individual sensors, the hottest of all sensors, or the hottest of all sensors on the PA and Isolator ('PA Group Sensors').

4.5.1 Fan Override

There is a fan override feature available to force the fans to turn on at full speed. When fan override is set to always on the fans will turn on and ignore the reference temperature.

4.5.2 Self-Test

The fan controller has a self-test feature which causes the fans to run at full speed for a minute so fan operation can be verified. The self-test feature runs once every 24 hours by default.

5. Diagnostics

5.1 Status Monitoring

`Sensors -> Sensor Configuration`

The paging transmitter has a number of sensors which are continuously monitored. The sensors are used to monitor:

- Internal voltage and current levels.
- Ambient and transmitter temperature.
- Fan operation.
- Transmitted and reflected power.

Each sensor has configurable upper and lower cut-offs that will cause a fault when exceeded. For example, if the driver temperature upper cut-off is exceeded, the high driver temperature fault will be set active.

A full list of sensors, units of measure, and range of values can be found in Appendix E.

5.1.1 Conditional Cut-off Checking

Some sensors are only compared against their upper and lower cut-offs under certain conditions, such as when the transmitter is on. The following sensors have conditional cut-off checking:

During transmission:

- Exciter current.
- PA current.
- Driver current.
- Reverse power.
- Transmit power.
- Driver power.
- Exciter power.
- Isolator VSWR.

While the fans are turned on to full speed:

- Front and rear fan current.
- Front and rear fan RPM.

A sensor that falls outside its cut-offs while its checking condition is met will cause the respective fault to become active. A non-latching fault will only be cleared once it has returned to within its cut-offs while its checking condition is met. A latching fault must be cleared in software.

5.1.2 Minimum and Maximum Sensor History

When a sensor exceeds a previous minimum or maximum value for that sensor, the new minimum or maximum value is saved to non-volatile storage. The minimum and maximum sensor values also use the conditional cut-off checking. For example, minimum and maximum transmit power values are only recorded during transmission. The sensor history can be cleared to aid in troubleshooting.

5.2 Faults

`Faults -> Fault Configuration`

Undesirable operating conditions are reported using the faults feature of the paging transmitter. In most circumstances the paging transmitter should not have any active faults. Active faults indicate incorrect setup, a hardware issue or misconfiguration of the paging transmitter.

Faults can be in one of four states:

- ***Inactive:*** The fault is inactive.
- ***Fleeting:*** The source of the fault is currently active; however it has not been active longer than the minimum fault duration setting.
- ***Active:*** The source of the fault is currently active.
- ***Latched:***
    - For Faults: The fault was previously active but the source of the fault is no longer present.
    - For Fault Actions: The fault action has been carried out.

A list of possible faults can be found in Appendix E.

5.2.1 Fault Actions

Each fault can be configured to perform an action when the fault transitions from the inactive (or fleeting) to the active or latched state. The actions that are taken due to a fault are called *Fault Actions.* There are five fault actions:

- ***Reference switchover:*** The paging transmitter switches to the internal reference.
- ***Disable transmission:*** Any current transmission is interrupted, the transmitter is keyed down and future transmissions are disabled.
- ***Scale transmit power:*** Transmit power is reduced to a configured percentage. See section 4.3.1.
- ***Enable PA current fold-back:*** The PA current fold-back is engaged.
- ***Enable reverse power fold-back:*** The reverse power fold-back is engaged.

Each fault action operates as a fault itself; therefore when a fault action is taken, it can be seen as latched in the faults menu and logged in the fault history. Fault actions are latch-only and can only be cleared through user intervention. Any actions performed are reverted once the fault action is cleared.

5.2.2 Fleeting Faults

The minimum fault duration parameter determines how long the source of a fault is active until it is reported to the fault interface. A fault that does not reach the minimum fault duration will not be logged, activate a hardware alarm or trigger a fault action.

5.2.3 Combined Fault

The combined fault is an optional fault that will become active if any fault within the combined fault set becomes active. Each fault can be configured to be part of the combined fault set. The combined fault will only become inactive when all of the faults in the combined fault set return to inactive. The combined fault has a dedicated alarm output.

5.2.4 Hardware Alarm Outputs

A hardware alarm output can be assigned to each fault (see Appendix A.4 for the LIU interface pin-outs). When the fault is in the active or latched state, the respective alarm will be set to active. Multiple faults can share the same alarm output. The alarm output will only be set inactive if all of the faults that use that alarm output are inactive.

A list of hardware alarms available can be found in section 3.7.

5.3 Remote Firmware Update and Snapshot

Diagnostics -> Firmware Update

5.3.1 Update

The remote firmware update feature is used to upload a firmware image to a paging transmitter for feature additions and/or bug fixes. Remote firmware update requires a Cruise Control connection to the paging transmitter and a valid RFI-148/900250 firmware image file.

The firmware update process has two stages: uploading the firmware image to the paging transmitter and applying the firmware image.

FIRMWARE IMAGE UPLOAD

To upload the firmware image to the paging transmitter first connect to the transmitter using Cruise Control. In the Cruise Control interface select `Device -> Load Firmware` from the toolbar. In the new window that appears, navigate to the directory where the firmware image file is located, select the file and click `Upload`. The upload process is displayed on the status bar in Cruise Control, near the bottom right. Once the upload is finished, the status will display “Monitoring”.

Note that at this point the firmware image has not been applied. The firmware image is kept in non-volatile storage until it is required.

Once the firmware image has been uploaded, at any later date the firmware image can be applied.

APPLYING FIRMWARE IMAGE

To apply an uploaded firmware image, run the "Update Firmware Now" routine. The paging transmitter will reset to apply the image and will be unresponsive for up to one minute. Note that while the paging transmitter is applying the firmware image, it will not transmit, respond to AT commands or connect with Cruise Control.

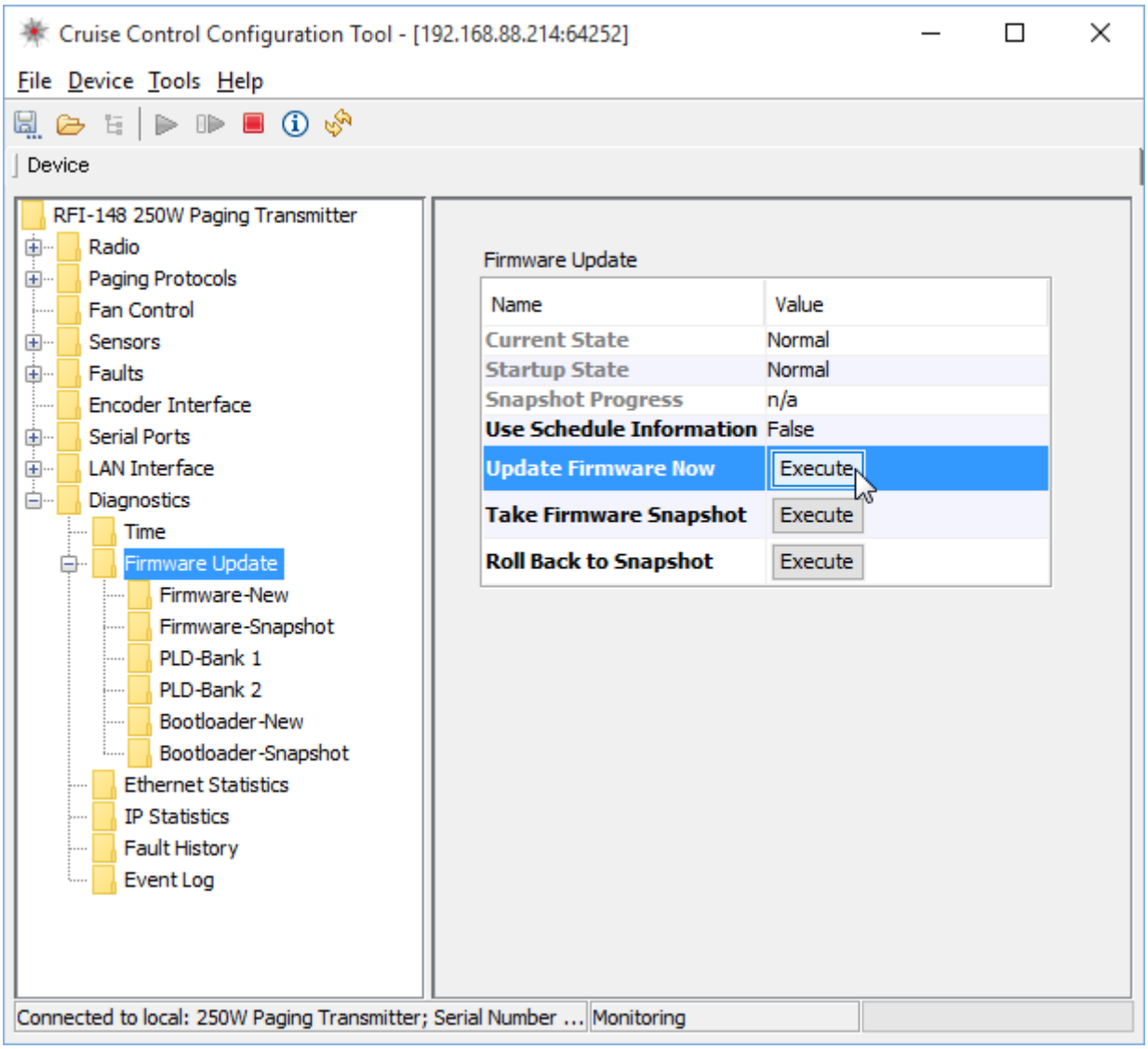

Figure 13: "Update Firmware Now" routine

When the firmware starts up after applying the new image the "Version String" can be inspected to ensure the new firmware image was loaded.

5.3.2 Snapshot

The paging transmitter has a firmware "Snapshot" used for recovering the paging transmitter to a previous state. The snapshot contains a backup of the current firmware and configuration.

To create a snapshot, run the “Take Firmware Snapshot” routine. The paging transmitter will continue operating normally during the snapshot process, which takes up to one minute to complete. The progress of the snapshot is displayed in the “Snapshot Progress” field.

The snapshot can be reverted to at any stage. This can be useful to revert back to a ‘known good state’ if the paging transmitter has been misconfigured or has been updated with an unwanted firmware update. To revert to the snapshot run the “Roll Back to Snapshot” routine. The paging transmitter will reset and take up to ninety seconds to revert back to the snapshot firmware and configuration. After reverting to a snapshot the paging transmitter will start up with the firmware update exception fault latched to notify that the snapshot was used.

By default, the paging transmitter has a factory snapshot that contains default factory firmware and configuration.

5.4 Time

5.4.1 Real Time Clock

`Diagnostics -> Time`

A battery-backed real time clock is used to track the passage of time. An accurate time is not essential for the operation of the transmitter, but aids diagnostics and troubleshooting. The time is used for:

- Generating time stamps for:
  - The transmitter fault history.
  - Firmware update images.
- Transmitter uptime since power-up.
- A short history of transmitter events (PTT on, off).

TIME ZONE

The time zone can be specified in hours and minutes as an offset from Coordinated Universal Time (UTC).

5.4.2 SNTP Client

`LAN Interface -> SNTP`

The transmitter supports time synchronisation using the Simple Network Time Protocol (SNTP) version 4. The SNTP client can be disabled or set to unicast mode. In unicast mode, the paging transmitter will query the configured time server for time updates at a configurable interval. By default the SNTP client is disabled.

6. Internal Encoding

6.1 Overview

`Paging Protocols -> Encoding Mode`

The RFI PTX supports both internal and external page message encoding:

- ***External Encoding:*** The historical and most common way of interfacing to the RFI PTX is by clocking in pre-encoded paging data using the TTL inputs on the LIU. The RFI PTX will typically interface with a Base Station Controller (BSC) that provides the encoded data.

- ***Internal Encoding:*** The RFI PTX supports internal encoding of the POCSAG paging standard for generating messages when submitted through the serial or Ethernet ports. Messages can be submitted using the industry standard TNPP, TAP, or PET protocols. A custom protocol developed by STI Engineering also provides an additional simple datagram protocol for submitting pages: "Page Datagram".

This section provides an overview of the internal encoding functionality.

When internal encoding is in use, the Hardware PTT and Auto PTT functions are disabled.

6.2 POCSAG Settings

`Paging Protocols -> POCSAG`

The RFI PTX has several options for the POCSAG protocol in order to support differing networks:

- Preamble Length: The POCSAG preamble is used to wake up paging receivers and allow them to lock to the incoming signal. A default value of 576 bits is used which is the de facto standard for POCSAG.

- Function Override: Allows the function bits in a POCSAG address codeword to be overridden to this value. By default the function bits will follow the message encoding (00: Numeric, 01: Tone-only, 11: Alpha-numeric). The function bits have also been known as the "Group Code".

- Purge Timeout: The RFI PTX waits up until the purge timer in order to collate incoming page submissions into a single large transmission. This saves on overhead of having to repeat the preamble. Shorter Purge Timeouts will produce lower latency on page submission to transmission, at the possible expense of lower throughput when sending many page messages.

6.2.1 Page Repeating

`Paging Protocols -> POCSAG -> Page Repeat Rules`

The RFI PTX supports a set of rules that trigger the repetition of a submitted page messages. When a rule is enabled any messages which match the cap code will be repeated *Count* number of times every *Delay* seconds.

6.2.2 Tx Delay

`Paging Protocols -> POCSAG -> Tx Delay`

The RFI PTX supports a configurable delay on internally encoded messages. When Tx Delay is not zero then messages will be held for "Tx Delay" seconds before transmit. If repeats are configured then they will occur the configured repeat time after the Tx Delay.

6.3 Protocols Supported

Paging Protocols -> Encoding Mode

All protocols are accessible through either the rear serial port or the Ethernet port via TCP or UDP port 64250.

6.3.1 TNPP

Paging Protocols -> TNPP

The RFI PTX supports the ETE REQ and CAP PAGE block types. The TNPP station address is configurable.

6.3.2 PET

Paging Protocols -> TAP/PET

The RFI PTX supports the PG1 and PG3 page submission types. Note that the page "zone" for PG3 has no effect on the RFI PTX and it only accepts this value for backwards compatibility. Also accepted is a password up to length 6 characters. The password is not checked and also exists only for backwards compatibility.

There are several options available to allow for differences in PET implementations:

- Line Separator: The RFI PTX can print either a carriage return (<CR>) or a carriage return and line feed (<CR><LF>) for line separation. Note that the RFI PTX only accepts lines separated by <CR>.
- Timeout: The timeout while expecting the next command string is configurable. The RFI PTX starts a timer when it is expecting more data. If the timeout expires the RFI PTX PET parsing returns to either the *Idle* or *Logged In* state.
- Baud Rate: Due to PET not having a way to submit baud rate with page messages, the baud rate must be pre-configured. Standard POCSAG baud rates of 512, 1200, and 2400 are supported.
- Stay Logged In: This option allows the RFI PTX to remain in the *Logged In* state (ie, after the PG1 and password sequence) so messages can be submitted without having to handshake the connection each time. This option can be used in conjunction with Implied Login to skip handshaking altogether.
- Implied Login: If the <STX> character (the start of a message submission) is sent to the RFI PTX this option allows the RFI PTX to transition directly to message submission state and skip the login handshaking.
- Detect Numeric Pages: Encode a paging message as numeric if all characters within the message fit the numeric encoding scheme (ie, all characters are any of the following: `'0', '1', '2', '3', '4', '5', '6', '7', '8', '9', '!', 'U', ' ', '-', ']', '['`).

6.3.3 TAP

Paging Protocols -> TAP/PET

The TAP protocol is treated the same as PET, however with some extensions:

- Group Code: The RFI PTX can be configured to accept a group code that trails the pager ID during a message submission. The group code can be 'A', 'B', 'C', or 'D' when set for "Trailing Character", or '1', '2', '3', '4' when set to "Trailing Digit".

Paging Protocols -> Page Datagram

6.3.4 Page Datagram

The Page Datagram protocol is request-response. The maximum datagram length including the sync and CRC-32 fields is 265 bytes. Any datagrams larger than this will be dropped without response.

The general format of the protocol is (size in bytes of field shown in parenthesis):

Sync (1) 0xCA	Length (2)	Type (1)	Source Address (2)	Sequence number (2)	Packet-specific-data (x)	CRC-32 (4)

Header Footer

Figure 14: Page datagram generic format

The general fields are:

- Sync (1): The datagram sync byte, always 0xCA
- Length (2): The length of the datagram, minus the 3-byte header (sync, length) and 4-byte footer (CRC)
- Type (1): The type of the page datagram, see below
- Source Address (2): The address of the RTU to which the reply (if any) should be sent. This can be set to 0xFFFF if unused
- Sequence number (2): An incrementing sequence number for confirming replies. This can be set to 0 if unused
- Packet-specific-data (x): Changes depending on the type field. Each type is shown in the following section
- CRC-32 (4): 32-bit CRC generated by the polynomial 0xEDB88320, with a starting value of 0xFFFFFFFF and the resulting value XOR'd with 0xFFFFFFFF. The CRC-32 is generated over the whole datagram excluding the Sync and CRC field.

PAGE SUBMIT

Submits a page message for transmission by the RFI PTX. The format of the page submit packet is shown in Figure 15.

<header>	Message length (2)	Baud rate (2)	Page class (1)	Cap code (4)	Function override (1)	Message (x)	<footer>

Figure 15: Page submission packet format

The fields are:

- <header>: The generic header shown in Figure 14 with the type field set to 0
- Message length (2): The length of the "Message (x)" field (the only variable length portion of this packet)
- Baud rate (2): The baud rate as an integer (ie, 512, 1200, 2400).
- Page class (1): Determines the encoding of the message, one of:

- 0: Numerical encoding
- 1: A tone-only message – no message codewords are sent, only an address codeword. The message field should be empty
- 3: Alpha numeric encoding

- Cap code (4): Also known as pager ID, pager address, pager number, etc. The destination cap code for this message. For POCASG the valid cap codes are 1 to (2^21)-1
- Function override (1): When set to 0, does not override the "function" bits in the address codeword and instead uses the page class to determine the function bits. When set to 1 through 4 will encode the page as per the page class format, however it will override the function bits to this value.
- Message (x): 0 to 239 bytes long message
- <footer>: The generic footer shown in Figure 14

SUBMIT RESPONSE

A reply datagram generated by the RFI PTX. The format of the submit response is shown in Figure 16.

<header>	**Response code (4)**	**<footer>**

Figure 16: Submit response packet format

The fields are:

- <header>: The generic header shown in Figure 14 with the type field set to 1.
- Response code (4): A 32-bit response code:
  - 0x0: Page submission succeeded
  - 0x1: Page submission failed: too many pages in queue
  - 0x2: Unknown datagram type field
  - 0x3: Unexpected packet length
  - 0x4: Page submission failed: general error
  - 0x10: Nothing was performed – this is a link test reply
- <footer>: The generic footer shown in Figure 14.

LINK TEST

A link test is a query with no side effects that confirms the RFI PTX is "alive" and receiving datagrams. The reply to a link test query is a submit response but with the response code of 0x10.

The format of the link test query is shown in Figure 17.

<header>	<footer>

Figure 17: Link test query packet format

The fields are:

- <header>: The generic header shown in Figure 14 with the type field set to 2.
- <footer>: The generic footer shown in Figure 14.

6.4 Test Functions

`Paging Protocols -> Test`

When internal encoding is enabled the RFI PTX can generate test messages as a simple means to confirm site operation or perform extended site surveys.

6.5 Event Triggered Page

`Paging Protocols -> Event`

When internal encoding is enabled the RFI PTX can generate a pre-defined message to a pre-defined capcode due to configured events. The current supported events are:

- Aux Input 2 Active Low (Configured in Encoder Interface menu)
- Aux Input 2 Active High (Configured in Encoder Interface menu)

The *Throttle* setting exists to cap the amount of pages that are sent due to page events. The PTX will mask all events until the *Throttle* duration has expired for the previous event. This can act as debouncing logic if the Aux Input 2 is connected to a switch.

6.6 Encryption

RFI-148 devices running at least 4.7 version firmware provide the ability to encrypt internally encoded POCSAG messages. Note that only TPL pagers are currently supported. Please contact STIEN to discuss future support of other pager manufacturers.

The core of the encryption feature runs AES-256, which is a symmetric algorithm – the same key is used to encrypt as to decrypt – and this key must be known by both transmitter and receiver prior to becoming effective.

6.6.1 Key Scheme

Several scenarios are catered for regarding the use of encryption keys, defined according to three parameters: the customer's desire to use either one or multiple keys, their freedom to use keys of their choosing and the device to which the RFI-148 is transmitting encrypted pages. Specific scenarios and recommended configurations are given in Table 11.

<table>
<tr><th colspan="2" rowspan="3"></th><th colspan="4">Key Scheme</th></tr>
<tr><th colspan="2">One per Capcode</th><th colspan="2">One per System[2]</th></tr>
<tr><th colspan="4">Key Selection Freedom</th></tr>
<tr><th colspan="2"></th><th>✓</th><th>✗</th><th>✓</th><th>✗</th></tr>
<tr><td rowspan="5">Decrypting Device</td><td rowspan="3">STIEN Decryption-capable (e.g. RFI-OAD)</td><td rowspan="3"><u>Key-generator</u> (both devices)

No key entry necessary.</td><td rowspan="5">Not currently supported.

Please contact STIEN.</td><td colspan="2"><u>Single user key</u> (both devices)</td></tr>
<tr><td colspan="2">Use key-generator with an arbitrary capcode (or other trusted source) on either device to derive single key.</td><td>-</td></tr>
<tr><td colspan="2">Enter key into both devices.</td></tr>
<tr><td rowspan="3">Non-STIEN</td><td rowspan="3"><u>Key-generator</u>

Use this to derive keys for receiver.</td><td colspan="2"><u>Single user key</u></td></tr>
<tr><td colspan="2">Use key-generator with an arbitrary capcode (or other trusted source) to derive single key.</td><td>-</td></tr>
<tr><td colspan="2">Enter key into both devices.</td></tr>
</table>

Table 11:- Recommended Encryption Key Schemes.

SHARED KEY DERIVATION

To derive a cryptographically secure key, do the following:

1. Enable the encryption feature (*ATS220=1*).
2. Enable the key generator (*ATS222=1*)
3. Enter the customer-specific password (*ATS225*) that will have been provided to you on purchase of the unit. This will "unlock" access to the encryption keys that will be displayed on capcode entry.

[2] Due to the maintenance burden and increased key vulnerability of this scheme (resulting from key compromise), STIEN discourages its use.

4. In the "Key Generator" table, enter an arbitrary capcode for which a key will be generated (*ATS226*).

After a brief (~1 sec) pause, the upper and lower halves of the cryptographically secure generated encryption key will be available in ASCII-HEX format (i.e. 32 characters for each half) for copying from the table (*ATS227* and *ATS228*).

SHARED KEY SETUP

The key-sharing procedure for each is defined here; refer to Table 11 to determine which approach to adopt.

KEY GENERATOR

It is recommended to use the key-generator feature whenever possible. No keys need to be entered or managed by the user; matching cryptographically secure keys are either generated in both devices at run-time, where a STIEN decryption-capable device is in use, or the non-STIEN decrypting device is deployed with keys as generated by the RFI-148's key generator:

1. Enable the encryption feature (*ATS220=1*).

2. Enable the key generator (*ATS222=1*)

3. Perform the above steps on the STIEN decryption-capable device also, if in use, or, if not:

    a. Enter the customer-specific password (*ATS225*) that will have been provided to you on purchase of the unit. This will "unlock" access to the encryption key entry fields.

    b. In the "Key Generator" table, enter the capcode for which the key will be generated (*ATS226*).

    c. After a brief (~1 sec) pause, the upper and lower halves of the cryptographically secure generated encryption key will be available in ASCII-HEX format (i.e. 32 characters for each half) for copying from the table (*ATS227* and *ATS228*, respectively).

    d. Enter this key into the encryption device.

    e. Repeat steps *b* through *d* for each capcode.

SINGLE USER(-ENTERED) KEY

A user can specify their own encryption key by disabling the key generator, then entering this key into the appropriate fields. In this scenario, *all* messages that meet the filtering criteria will be encrypted using this same key, regardless of message capcode destination. *This implementation is discouraged, since compromise of this key compromises the entire system*.

1. Enable the encryption feature (*ATS220=1*).

2. Disable the key generator (*ATS222=0*)

3. Enter the customer-specific password (*ATS225*) that will have been provided to you on purchase of the unit. This will "unlock" access to the encryption key entry fields.

4. In the "Single Key Entry" table, enter the chosen encryption key, in ASCII HEX format, a quarter in each of the four columns, being mindful of their order.

5. Enter this same key into the paging receiver.

6.6.2 Encrypting

Having completed the key-sharing procedure, messages can be encrypted as follows[3]:

1. Enable the encryption feature (*ATS220=1*).

2. Indicate preferences:

    a. All messages are to be encrypted (*ATS221=1*)

    b. Only messages to specified capcodes are encrypted (*ATS221=0*):

        i. All capcodes that fall within a range specified by upper (*ATS242[1]*) and lower (*ATS242[0]*) limits **AND/OR**

        ii. Individual capcode values as listed in the "Individual Capcodes" table (*ATS241*).

3. Optionally verify the configuration by issuing a few test messages to the relevant capcode(s) (Refer to 6.4)

6.6.3 Security

Note the following security features:

- Entry of the customer password is necessary to reveal encryption keys.
- The customer password is provided as an input to the key generation algorithm, such that purchase of an RFI-148 by a different customer cannot reproduce encryption keys of another.
- The "End Password Session" routine (*ATS224*) is provided to allow immediate concealment of any displayed encryption key.
- After 30 seconds of inactivity of the Capcode field (*ATS226*) or ay key field, all encryption keys will be concealed.
- On concealment of encryption keys, the customer password must be re-entered to reveal the key.
- The customer password cannot be viewed or changed – it is assigned just once, at the factory.

[3] It is not currently possible to apply different encryption configurations on a per-stream basis; messages to a specified capcode will be encrypted or not regardless of their origin.

These measures ensure that leaving the configuration PC unattended with a Cruise Control interface running and visible will not represent a security risk.

***NOTE** :- Do NOT save a configuration file at any time that a key is visible, since this would preserve that key in a human-readable/plain-text (JSON) file, representing a security risk. Running "End Password Session" will put the unit into a state safe for configuration file saving.*

***NOTE**:- Be careful if using a terminal session to communicate/configure via AT commands, since encryption keys may either be visible in the current session history or preserved in historical session files.*

7. Hot Standby Operation

7.1 Overview

`Encoder Interface -> Hot Standby`

Hot standby operation allows the transmitter to operate in sites with high uptime requirements. It features automatic fail-over to a secondary transmitter. Hot standby operation is an optional variant to the RFI-148 and RFI-900 that requires an expansion port internal to the RFI-148 or RFI-900, and an additional external control unit ("RFI-PHSB": **P**aging transmitting **H**ot-**S**tandby **B**ox). The installation of such a system is illustrated in Figure 18.

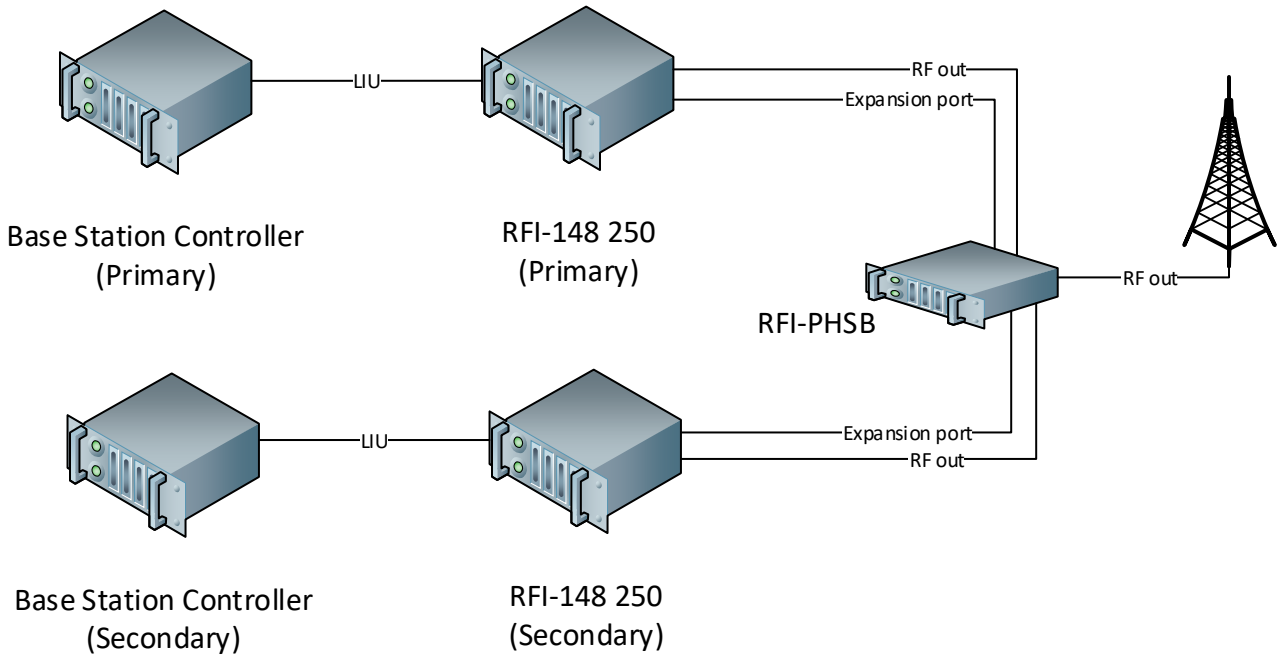

Figure 18: Hot standby system

The RFI-PHSB contains a high power RF switch to ensure minimal signal loss from the active RFI-148 250 to the antenna. The RFI-148 250 transmitters connect with digital signals to the RFI-PHSB using DA15 connectors.

The pair of RFI-148 250 transmitters assume either a Primary or Secondary role. The role of the transmitter is determined by which port it is connected to the RFI-PHSB, there are two ports "Primary" and "Secondary". The typical behaviour is that the Primary RFI-148 250 is keying up and sending paging data.

7.2 Compatibility and Configuration

Hot Standby operation requires firmware support, specifically firmware 2.11-G and above, and an expansion port in the transmitter (nominated during purchase with the 'H' order code character, see Appendix F). The recommended configuration sequence is:

1. Check Hot Standby is supported by hardware (expansion board is present in transmitter): "ATM19" will return "1" - *Supported*
    a. If "ATM19" returns "ERROR", then the firmware needs to be upgraded.
    b. If "ATM19" returns "0", then the expansion board is not present in the transmitter. Seek clarification from STI Engineering on upgrading an existing transmitter.
2. Check connection to the RFI-PHSB: "ATM18" will return "1" - *Detected*
    a. If "ATM18" returns "0", then the RFI-PHSB is not detected. Ensure the expansion port DA15 connector is plugged into the RFI-PHSB.
3. Configure the required Hot Standby Mode:
    a. "ATM10=0" (Disabled): The PTX is not operating in a hot standby environment and operates as normal.
    b. "ATM10=1" (Hardware Controlled): The *Can Go Active* signal is presented on pin 17 of the LIU. Active High.
    c. "ATM10=2" (Software Controlled): The *Can Go Active* signal is controlled via Hayes AT command or Cruise Control.
4. "ATM10=*x*" can return "ERROR":
    a. The error code can be read with "AT%14":
        i. "1": Not compatible with this hardware.
        ii. "2": Requires a power-on-reset to take effect.
5. Apply the Hot Standby mode configuration by resetting the PTX: "AT&T9"
6. Upon power up, check the PTX has detected its Role: "ATM13":
    a. "0": Hot standby is not configured
    b. "1": Role is unknown, it is likely the RFI-PHSB connection is broken or communication failed
    c. "2": Role is Primary
    d. "3": Role is Secondary

7. Check the current Hot Standby state: “ATM14”:
    a. “0”: Hot standby is not configured
    b. “1”: The unit is currently Active
    c. “2”: The unit is currently in Standby
    d. “3”: The RFI-PHSB was not detected at start-up. Check the RFI-PHSB connection.

7.3 Operation

The Primary RFI-148 250 has control of the RF switch position. The default switch position, when no Primary unit exists or the RFI-PHSB is unpowered, is for the Secondary unit. Upon power up the Primary unit will always favour itself for the RF switch position, but the power up default is to leave the switch in the Secondary unit position.

The Primary unit will change the RF switch to itself when all three signals satisfy the conditions:

- “Can Go Active” is True
    - For Hardware Standby Mode: Pin 17 is HIGH
    - For Software Standby Mode: “Can Go Active (SW)” is set to “True” (Hayes command: `ATM12=1`)”
- “TX Fault” is False (See section 7.4 below)
- “PTT” is Inactive

The Primary unit will change the RF switch to the Secondary unit if any two signals violate the conditions:

- “Can Go Active” is True
- “TX Fault” is False

Both the Primary and Second units know what position the switch is in. If the unit does not hold the switch position, transmission is disabled using the “PTT Override” feature. In this case “PTT Override Status” will read “DISABLED:In Standby”. Because of this behaviour, the Base Station Controllers providing encoded paging data and PTT need not know of the RF switch position.

7.4 Switchover Faults

Faults -> Fault Configuration -> Go Standby

An additional option per fault is provided that is the source of the “TX Fault” signal. By default, any faults that would usually cause paging messages to fail to transmit will assert the “TX Fault” signal. This is configurable per-fault within the Faults menu as the “Go Standby” option.

7.5 Hardware Feedback

`Encoder Interface -> External I/O`

Three open-collector MOSFET outputs report a summary of the unit state:

- PHSB MISSING (LIU pin 4): Active when a Hot Standby mode is configured and the RFI-PHSB cannot be detected
- IN STANDBY (LIU pin 23): Active when the unit is in Standby mode (ie, PTT disabled)
- IS PRIMARY (LIU pin 24): Active if the unit is the Primary unit

8. Analogue Paging

`Paging Protocols -> Analogue`

RFI-148 units offering Analogue Paging support allow a tone or audio signal (from e.g. a microphone) to be injected into the PTX via the LIU. Once configured and calibrated, the PTX will frequency modulate the carrier according to changes in the audio amplitude.

Dedicated, configurable Deviation ("ATM28") and Carrier Offset ("ATM27") values are provided for Analogue Paging, as distinct from their existing digital paging counterparts. While analogue mode is engaged, a "Current Deviation" diagnostic is also provided ("ATM29").

All parameters and behaviours that support configuration and/or diagnostics can be done so either via AT command (refer to Appendix D) or Cruise Control. Attempts to configure invalid or inconsistent values will return an error.

Refer to Table 16 for the relevant performance specifications.

Note that alternate use of the existing digital paging (i.e. POCSAG, FLEX-2, FLEX-4 etc.) and analogue paging can be achieved simply by controlling LIU Pin 13. That is, the Analogue Paging *feature* itself can remain enabled permanently.

Is strongly advised to ensure that the configured Deviation setting does not exceed 85% of the configured Deviation Limiter value, to ensure minimal audio distortion.

8.1 Compatibility

Analogue Paging operation requires firmware support, specifically firmware 4.3-B and above, and additional hardware within the transmitter (nominated during purchase with the 'A' order code character – see Appendix F).

8.2 Features

Analogue Paging offers several configurable features:

8.2.1 Signal format

The LIU will accept the signal modes given in Table 12.

Signal Mode	LIU Connections	
	Pin 5	Pin 6
Fully-differential	Audio+	Audio-
Pseudo-differential	Audio+	DC Voltage
Single-ended	Audio+	GND

Table 12: LIU configuration for supported audio signal modes

8.2.2 Pre-emphasis Filter

To minimise low frequency noise and distortion, a pre-emphasis filter can be engaged into the audio path ("ATM32=1"). It is expected that a matching de-emphasis filter would be used in the receiving equipment, accordingly, to restore the original audio. Disabling pre-emphasis results in a flat response across the supported frequency band. Refer to Table 16 for filter specifications.

8.2.3 Deviation Limiter

To prevent adjacent channel interference, as might be caused by the injection of a signal louder than that used to calibrate the audio circuit (by e.g. shouting into the microphone), a deviation limit can be configured ("ATM30"). This value must lie between the currently configured deviation frequency and the maximum supported deviation. Indication is provided when the limiter is being engaged via the Deviation Limiter Status field ("ATM31").

8.2.4 Audio Polarity

The PTX can be configured to swap the interpretation of the Audio+ and Audio- inputs ("ATM33=1").

8.3 Calibration

Because the PTX can support a wide range of input amplitudes, its internal audio circuitry must be calibrated when any of the following changes occur[4]:

- Deviation frequency
- Deviation Limiter frequency
- Audio input amplitude

Calibration is initiated by:

- Setting a new deviation value,
- Setting a new Deviation Limiter value or
- Pressing the labelled "Calibrate" push button on the PTX's expansion plate (at the rear).

It is possible to install a PTX and successfully calibrate, with confirmation, without any serial or Ethernet connection to the unit. This is achieved through the use of the front panel LEDs; specifically the Tx Power LED array. On Calibration initiation, all green LEDs on the front panel Tx Power array will illuminate, followed by a phase wherein each one extinguishes in turn. This "countdown" phase indicates that calibration

[4] Note that changes to Carrier Offset, Pre-Emphasis engagement and Audio Polarity do not require recalibration.

is about to start. As calibration progresses, each green LED will light up again, in turn, until calibration completes[5].

On completion, the LED array reports success/failure, holding the result for three seconds:

- Success – the green LED progress indication is held
- Failure – the two red LEDs illuminate, while a single green LED is lit, its position within the array indicating the reason, in accordance with Table 13.

Following calibration, the Tx Power LED array's behaviour will return to normal.

LED Position	Failure Cause	Remedial Action
1	Timeout	Repeat calibration[6]
2	No reference was detected	Ensure a tone of supported amplitude is being presented to the LIU pins in accordance with Table 12
3	Digital Paging mode is selected	Pull LIU Pin 13 to 0V/GND

Table 13: Calibration failure error codes

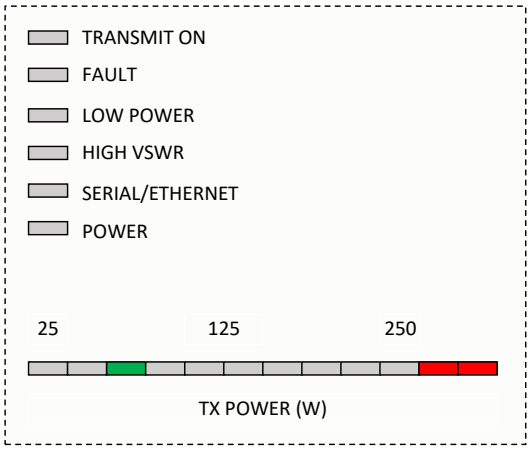

Figure 19: LED Array reporting Digital Paging mode is selected during calibration attempt.

In addition to the front panel diagnostics, the PTX can be interrogated for calibration state information via AT command ("ATM34").

[5] It may often be the case that calibration completes before the first LED lights. In this event, the "countdown" preparation phase provides user confidence of calibration having occurred.

[6] Rarely, the calibration will take longer than expected and timeout – repeating the process invariably succeeds.

8.4 Configuration

The recommended configuration sequence is:

1. Ensure the PTX is equipped to support Analogue Paging: “ATM25” should return ‘1’
2. Enable Analogue Paging capability: “ATM26=1”
3. Pull “Digital/Analogue Mode Select” (LIU Pin 13) low to enable the analogue (not digital) datapath.
4. Inject a 1kHz reference tone of amplitude corresponding to the desired deviation frequency
5. Perform the relevant initiation action[7]:
    a. Press the “Calibrate” button OR
    b. Modify the Deviation frequency OR
    c. Modify the Deviation Limiter frequency.
6. The unit will undergo self-calibration, reporting success/failure on completion.

8.5 Faults and Alarms

Whenever calibration fails, an “Audio Calibration Failure” (refer to Appendix E) fault is triggered and the red “FAULT” LED on the front panel will illuminate. This fault can be cleared as per any other and it does not in turn trigger any other (e.g. protective/remedial) action.

No alarms have been configured with regard to Analogue Paging.

[7] If you suspect you may not have the means to connect to the PTX via either its RS-232 serial or Ethernet ports at deployment time, please contact STI in advance so that we can deliver your unit with the correct Deviation and Deviation limiter frequencies (amongst other settings) pre-configured.

Appendix A. Technical Specifications

A.1 Type Approvals

RFI-148		
Australia / New Zealand	AS NZS 4769.1	Australian Supplier ID: N161
FCC	CFR 47 Part 15 and Part 90	FCC ID P5MRFI148
ETSI	ETSI EN 300 113, EN 301 489, EN 60950	N/A
IC	RSS-GEN, RSS-119, ICES-003	IC: 10592A-RFI1480304

Table 14: RFI-148 type approvals

RFI-900		
FCC	CFR 47 Part 15 and Part 90	FCC ID P5MRFI900

Table 15: RFI-900 type approvals

A.2 RFI-148/900250 Specifications

RF Operating Bandwidth	RFI-148	RFI-900	
	138 – 174 MHz	929 – 932 MHz	
RF Switching Bandwidth	RFI-148	RFI-900	
	2.5 – 6 MHz	3 MHz	
Channel Spacing	20 kHz, 25 kHz, 30 kHz	12.5 kHz, 15 kHz	6.25 kHz
	Occupied Bandwidth		
All modulation	< 14 kHz	< 8 kHz	<5 kHz (SA305 & SA206)
RF Frequency Raster	Selectable: 30kHz, 25 kHz, 20 kHz, 15kHz, 12.5 kHz, 10 kHz, 7.5kHz, 6.25 kHz, 5 kHz, 2.5kHz.		
RF Output	20 to 250 Watts +/- 0.5 dB 20 to 110 Watts +/- 0.5 dB for Canadian release		
RF Diag	RFI-148	RFI-900	
	Transmitting mode power level: -50 dBm Listening mode insertion loss: 12 dB +/- 2 dB	Transmitting mode power level: -40 dBm +/- 15 dB Listening mode insertion loss: 35.5 dB +/- 2.5 dB	

VSWR Measurement Accuracy[8]	RFI-148		RFI-900
	Systag ≤ 1.10-B	Systag ≥ 1.11-B	
Directivity	≥ 22 dB	≥ 35 dB	≥ 32 dB
Reflection tracking	≤ 2 dB	≤ 2 dB	≤ 2 dB
Source match	≥ 20 dB	≥ 20 dB	≥ 27 dB
Internal Reference	Frequency: 10 MHz Stability: +/- 1 ppm (-30 to +75 degrees C)		
External Reference	Frequency: 5 or 10 MHz Amplitude: -20 to +15 dBm		
Modulation	• POCSAG 512, 1200, 2400 bps (2-level FSK). • FLEX 1600 (2-level FSK), 3200 (2- or 4-level FSK), 6400 bps (4-level FSK).		
Real-time Clock	Time drift: 1 hour after 10 years Battery life: 43 years (estimated)		
Ethernet Port	10BASE-T/100BASE-TX, auto-negotiating.		
Serial Ports	Dual asynchronous full-duplex RS-232 Baud rates (rear port only): 300, 600, 1200, 2400, 4800, 9600, 19200, 38400, 57600, 115200 bps Data bits (rear port only): 7 or 8 Parity (rear port only): None, odd, or even Stop bits (rear port only): 1 or 2 Flow control (rear port only): None or hardware (RTS/CTS) Control lines (rear port only): RTS, CTS, DTR, DCD Front port configuration locked to 19200 8N1 Front port: DCE		
	Rear Port	RFI-148	RFI-900
		DTE	DCE
Digital Inputs	TTL Schmitt trigger with internal 100 KΩ pull-up. • Frequency Select 1 • Frequency Select 2 • Frequency Select 3 • Frequency Select 4 • Protocol Select • Hardware PTT • Tx Data L-bit • Tx Data H-bit • Transmit Clock • Aux Input 1 (General purpose, RFI-148 only)		
Alarm Outputs	Open-collector Darlington with 500 mA sink current.		

[8] For information on using these specifications to calculate the VSWR error please refer to the white paper *RD1194_Rev1_0_Determining_VSWR_Measurement_Error_from_Analyser_Datasheet_Specifications* available from Home › Support & Downloads › Knowledge Base at the STI Engineering website.

Input Voltage (Model specific)	24VDC Model: 20 V to 31.2 V for 24 V nominal -48VDC Model: -40.5 V to -57 V for -48 V nominal 110/240V AC Model: 100 to 250 V AC, 50 to 60 Hz		
Operating Temperature 24 V DC and -48 V DC	-30 to 55 ^{0}C		
Operating Temperature 110/240VAC	-30 to 50 ^{0}C		
Connectors (DC model)	DC Power: Terminal block Phoenix Contact 1703454 and cable mount plug Phoenix Contact 1967456. Front Serial Port: DE-9 RS-232 Female (DCE) LIU Interface: DC-37 Female Ethernet: RJ45 socket RF Output: N-type female 50 Ω RF Diag: TNC female 50 Ω External Reference Input: BNC female		
	Rear Serial Port	RFI-900	RFI-148
		DE-9 RS-232 Female (DCE)	DE-9 RS-232 Male (DTE)
DC Output (RFI-900 only)	Voltage	24V	
	Max. Load	2A	
Size	4 RU 485 mm X 470 mm X 175 mm (includes handles & rear connectors)		
	RFI-148	RFI-900	
Weight	14 – 17 kg (product code dependent)	17 kg	
Analogue Paging	Audio Distortion (1kHz ref. at 60% deviation)	< 0.4% (typical)	
	Audio Passband (3dB frequency)	50Hz – 3500Hz (typical)	
	Channel width	25kHz (Wideband) and 12.5kHz (Narrowband)	
	Frequency Response	Flat (50Hz to 2800Hz; not referenced to 1kHz)	+/-1dB (typical)
		Pre-emphasised (300Hz to 3000Hz, 3.3dB/octave)	+/-1.5dB (typical)
	Audio input	Level	0.035 to 2 Vp-p (corresponding to -25dBm to +10dBm based on 50 Ω)

		Impedance with transformer	600Ω
		Configurations	Single-ended Pseudo-differential Fully-differential.
		DC Voltage for Pseudo-differential configuration	±1.5V

Table 16: RFI-148/900 250 Specifications

RFI-148 current draw		
Typical Current Draw at 24 V DC.	AMCA, FCC	ETSI
	• Idle: 0.6 A • 20 W: 5.85 A • 100 W: 11.58 A • 250 W: 17.28 A	• Idle: 0.6 A • 20 W: 6.03 A • 100 W: 11.79 A • 250 W: 19.05 A
Typical Current Draw at -48 V DC.	AMCA, FCC	ETSI
	• Idle: 0.5 A • 20 W: 3.42 A • 100 W: 6.51 A • 250 W: 10.31 A	• Idle: 0.5 A • 20 W: 3.52 A • 100 W: 6.89 A • 250 W: 11.48 A
Typical Current Draw at 240 V AC	ACMA, FCC	ETSI
	• Idle: 0.10 A • 20 W: 0.79 A • 100 W: 1.43 A • 250 W: 2.14 A	• Idle: 0.10 A • 20 W: 0.82 A • 100 W: 1.46 A • 250 W: 2.36 A
Typical Current Draw at 120 V AC	IC (Canadian release)	
	• Idle: 0.20 A • 20 W: 1.58 A • 100 W: 2.86 A • 110 W: 3.15 A	

Table 17: RFI-148 current draw

RFI-900 current draw	
Typical Current Draw at 120 V AC	Figures quoted are with fans on unless specified. • Idle (Fans off): 0.48 A • 20 W: 2.01 A • 50 W: 2.84 A • 100 W: 3.93 A • 200 W: 5.56 A • 250 W: 6.22 A

Table 18: RFI-900 current draw

A.3 Serial Connectors

A.3.1 Rear Serial Port

Pin	Function	Direction	
		RFI-148	RFI-900
1	DCD	Input	Output
2	RxD	Input	Output
3	TxD	Output	Input
4	DTR	Output	Input
5	GND		
6	N/A		
7	RTS	Output	Input
8	CTS	Input	Output
9	N/A		

Table 19: Back Panel Connector Pin OutRFI-900

A.3.2 Front Serial Port (DCE)

Pin	Function	Direction
1	N/A	
2	RxD	Output
3	TxD	Input
4	N/A	
5	GND	
6	N/A	

7	N/A	
8	N/A	
9	N/A	

Table 20: Front Connector Pin Out

A.4 LIU Interface

The LIU interface functions vary depending on the product code (see Appendix F) and the build revision (Exciter/Non-exciter).

LIU DB37 Port Function					Available LIU Cables	
DB37 Pin	**RFI-148 Exciter-based build**	**RFI-148 Non-exciter-based build and all RFI-900**	**Direction**		**148M116F 20 core cable Individual Wire Label**	**148M116H 20 core cable Individual Wire Label**
1	Protocol Select	Protocol Select	Input		PRO	PRO
2	Alarm 3	Alarm 3	Output		ALM3	ALM3
3	Alarm 10	Alarm 10	Output		*nc*	ALM10
4	Alarm 11	Alarm 11 OR Hot Standby "PHSB MISSING"	Output		*nc*	*nc*
5	Frequency Select 4	Frequency Select 4 OR Analog Mode "Balance Audio + input"	Input		*nc*	*nc*
6	Frequency Select 3	Frequency Select 3 OR Analog Mode "Balance Audio - input"	Input		*nc*	CH3
7	Frequency Select 2	Frequency Select 2	Input		CH2	CH2
8	Frequency Select 1	Frequency Select 1	Input		CH1	CH1
9	GND	GND	Output		GND	*nc*
10	GND	GND	Output		GND	*nc*
11	Hardware PTT	Hardware PTT	Input		PTT	PTT
12	Combined Alarm	Combined Alarm	Output		COMB	COMB
13	Auxiliary Input 2	Auxiliary Input 1[9] OR Analog Build "Digital/Analog Mode Select"[9]	Input		*nc*	*nc*
14	Alarm 1	Alarm 1	Output		ALM1	ALM1
15	Tx Data L-bit	Tx Data L-bit	Input		LB	LB
16	Tx Data H-bit	Tx Data H-bit	Input		HB	HB
17	LIU Detect	LIU Detect OR Hot Standby "Can Go Active"	Input		*nc*	*nc*
18	Tx Data Clock	Tx Data Clock	Input		CLK	CLK
19	GND	GND	Output		GND	GND
20	Alarm 2	Alarm 2	Output		ALM2	ALM2
21	Alarm 7	Alarm 7	Output		ALM7	ALM7
22	Alarm 4	Alarm 4	Output		ALM4	ALM4
23	Alarm 12	Alarm 12 OR Hot Standby "IN STANDBY"	Output		*nc*	*nc*
24	Alarm 13	Alarm 13 OR Hot Standby "IS PRIMARY"	Output		*nc*	*nc*
25	Auxiliary Input 4	GND	Build dependant[10]		*nc*	*nc*
26	Alarm 9	Alarm 9	Output		ALM9	ALM9
27	Auxiliary Input 3	Auxiliary Input 2	Input		*nc*	*nc*
28	Auxiliary Input 1	GND	Build dependant[10]		*nc*	*nc*
29	Alarm 5	Alarm 5	Output		ALM5	ALM5

[9] RFI-148 only. Not connected for the RFI-900

[10] Input for Exciter build and Output for Non-exciter build

30	Alarm 6	Alarm 6		Output		ALM6	ALM6
31	Alarm 8	Alarm 8		Output		ALM8	ALM8
32	+5 V	+5 V		Output		*nc*	*nc*
33	+5 V	+5 V		Output		*nc*	*nc*
34	+12 V	**RFI-148**	+12 V	Output		*nc*	*nc*
		RFI-900	+24V				
35	+12 V	**RFI-148**	+12 V	Output		*nc*	*nc*
		RFI-900	+24V				
36	+24 V nominal (Note: identical to DC input voltage for 24 VDC model)	**RFI-148**	+24 V nominal (Note: identical to DC input voltage for 24 VDC model)	Output		*nc*	*nc*
		RFI-900	*nc*[11]				
37	+24 V nominal (Note: identical to DC input voltage for 24 VDC model)	**RFI-148**	+24 V nominal (Note: identical to DC input voltage for 24 VDC model)	Output		*nc*	*nc*
		RFI-900	*nc*[11]				

Table 21: LIU Interface Pin Out

	Non-exciter-based build	Exciter-based build
Interface standards	5 V CMOS 5 V TTL (with modification) 3.3 TTL (with modification) 3.3 CMOS (with modification)	5 V CMOS 5 V TTL 3.3 TTL 3.3 CMOS
Input resistance	Schmitt trigger with internal 33 KΩ pull-up.	Schmitt trigger with internal 100 KΩ pull-up (148P306-B), 33 KΩ pull-up (148P306-C).
Nominal logic high input voltage	3.3 V to 5 V	3.3 V to 5 V
Minimum logic high input voltage	3.5 V	2.5 V
Maximum logic high input voltage	12 V	12 V
Nominal logic low input voltage	0 V	0 V
Maximum logic low input voltage	1.5 V	0.5 V
Minimum logic low input voltage	-12 V	-12 V
Over voltage protection	±12 V	±12 V

Table 22: LIU Encoder Input Specifications

	Non-exciter-based build	Exciter-based build
Output transistor type	Open collector MOSFET	Open collector Darlington
Maximum sink current	500 mA	50 mA

[11] For Hot Standby build +48 V nominal (Note: identical to DC input voltage)

Maximum output voltage	50 V	12 V

Table 23: LIU Alarm Output Specifications

Appendix B. Controller Configurations

The following section provides example wiring between the transmitter and some common controllers.

B.1 Motorola NIU Controller / FLEX 4 Level Mode Legacy

External NIU(TB3, TB4)	Transmitter (LIU, DC37)
TB3-2: Tx Clock	DC37-18: CLK
TB3-4: Tx key	DC37-11: PTT
TB3-8: GND	DC37-19: GND
TB4-2: Rx FQ1	DC37-15: LB
TB4-3: Rx FQ2	DC37-16: HB

Table 24: Motorola NIU Controller / FLEX Mode Connection

B.2 Glenayre C2000 Controller / FLEX 4 Level Mode Normal

Firmware 4.0 or later
4-Level Operation -> Normal

C2000 (J4)	Transmitter (LIU, DC37)
J4-10: GND	DC37-19: GND
J4-26: TXKEY+	DC37-11: PTT
J4-3: TD0+, MSB	DC37-15: LB
J4-34: TD1+, LSB	DC37-16: HB
J4-18: Data Clock+	DC37-18: CLK
J4-7: Freq2	DC37-6: CH3
J4-6: Freq1	DC37-7: CH2
J4-36: Freq0	DC37-8: CH1

Table 25: Glenayre C2000 Controller / FLEX Mode Normal Connection

B.3 Glenayre C2000 Controller / FLEX 4 Level Mode Legacy

Firmware older than 4.0

C2000 (J4)	Transmitter (LIU, DC37)
J4-10: GND	DC37-19: GND
J4-26: TXKEY+	DC37-11: PTT
J4-3: TD0+, MSB	DC37-16: HB
J4-34: TD1+, LSB	DC37-15: LB
J4-18: Data Clock+	DC37-18: CLK
J4-7: Freq2	DC37-6: CH3
J4-6: Freq1	DC37-7: CH2
J4-36: Freq0	DC37-8: CH1

Table 26: Glenayre C2000 Controller / FLEX Mode Legacy Connection

B.4 Glenayre C2000 Controller / POCSAG/FLEX 2 Level Mode L-bit

Encoder	Transmitter (LIU, DC37)
Tx Data	DC37-15: LB
PTT	DC37-11: PTT
GND	DC37-19: GND

Table 27: Glenayre C2000 Controller / POCSAG Mode Connection

B.5 Glenayre C2000 Controller / POCSAG/FLEX 2 Level Mode H-bit

Encoder	Transmitter (LIU, DC37)
Tx Data	DC37-16: HB
PTT	DC37-11: PTT
GND	DC37-19: GND

Table 28: Glenayre C2000 Controller / POCSAG Mode Connection

B.6 Zetron Model 66 Transmitter Controller / POCSAG/FLEX 2 Level Mode

Model 66	Transmitter (DC37)
DIG DATA (pin 10)	DC37-15: LB
DIG PTT (pin 7)	DC37-11: PTT
GND (pin 3)	DC37-19: GND

Table 29: Zetron Model 66 Controller / POCSAG Mode Connection

Appendix C. Management Reference

C.1 Serial Port Diagnostics

Name	Description	AT
Rx Total	The size of the input buffer.	I20[*p*,0]
Rx Used	The number of bytes currently stored in the input buffer.	I20[*p*,1]
Rx Bytes	The total number of bytes received.	I20[*p*,2]
Rx Errors	The total number of receive errors that have occurred. Sum of Rx Overflows, Rx Overruns, Rx Framing, and Rx Parity errors.	I20[*p*,3]
Rx Overflows	The number of receive overflow errors that have occurred. An overflow occurs when data is received, but the buffer is full.	I20[*p*,4]
Rx Overruns	The number of overrun errors that have occurred. An overrun occurs when the device is overloaded and cannot handle the incoming data.	I20[*p*,5]
Rx Framing	The number of framing errors that have occurred. Framing errors usually occur due to mismatched serial port baud rates.	I20[*p*,6]
Rx Parity	The number of serial parity errors that have been detected.	I20[*p*,7]
Tx Total	The size of the output buffer.	I20[*p*,8]
Tx Used	The number of bytes currently stored in the output buffer.	I20[*p*,9]
Tx Bytes	The total number of bytes that have been transmitted.	I20[*p*,10]
Tx Errors	The total number of errors that have occurred while transmitting. This is equal to the Tx Overflows count.	I20[*p*,11]
Tx Overflows	The number of transmit overflow errors that have occurred. This occurs when there is data to transmit, but the buffer is full.	I20[*p*,12]

Table 30: Serial Port Statistics

C.2 SNMP Diagnostic Parameters

Table 31 outlines the parameters accessible by SNMP. An 'R' under the access column indicates the parameter is read-only; an 'R/W' indicates read-write.

SNMP Textual Name	Access	Description
Diagnostics		
rfiDiagTimeLcl	R	The current local time (in seconds since Jan 1 1970).
rfiDiagTimeLclstring	R	The current local time.
rfiDiagTimeUp	R	Seconds since the radio powered up.
rfiDiagTimeUtc	R/W	The current UTC (in seconds since Jan 1 1970).
Fan Control		
rfiFanCtrlForce	R/W	Manual fan override (allows fans to be forced on).
rfiFanCtrlSensor	R/W	Temperature sensor used for fan control.
rfiFanCtrlTempOff	R/W	Sensed temperature below which fans will be turned off.
rfiFanCtrlTempOn	R/W	Sensed temperature above which fans will be turned on.
rfiFanSensTemp	R	Current temperature at sensor used for fan control.
Faults		
rfiFaultHistTblFault	R	The fault that occurred.
rfiFaultHistTblTime	R	The time that the fault occurred.
rfiFaultTblAction	R/W	Configured action to be taken when this fault occurs.
rfiFaultTblActtime	R	Duration for which this fault has been active, or 0 if the fault is not active.
rfiFaultTblCount	R/W	The number of times this fault has occurred since the statistics were reset.
rfiFaultTblLatch	R/W	Configured latching mechanism for this fault.
rfiFaultTblName	R	Name of the fault in this row of the table.
rfiFaultTblStatus	R	Indicates whether or not this fault condition is currently active.
Identity		
rfiIdApproval	R	International type approval code which applies to this device.
rfiIdFwver	R	Version information for the firmware loaded in this device.
rfiIdMfdate	R	Date on which this device was manufactured.
rfiIdOphours	R	An approximation of the total number of hours that this device has been powered up.
rfiIdProdstr	R	The model name for this device.
rfiIdSerialno	R	Factory assigned serial number for this device.
Paging Protocols		

rfiPageProtSelect	R/W	Active protocol profile.
rfiPageProtTblOffset	R/W	Configured carrier frequency offset for this profile.
rfiPageProtTblProt	R/W	Configured paging protocol for this profile.
Radio Parameters		
rfiRadioFrqChSelect	R/W	Currently selected radio channel number.
rfiRadioFrqChTblNo	R	Radio channel number.
rfiRadioFrqChTblTxfrq	R/W	Radio channel transmit frequency.
rfiRadioFrqRefCur	R	The current reference being used to generate channel frequencies.
rfiRadioFrqRefExt	R	The state of the external reference.
rfiRadioFrqRefMode	R/W	The reference selection method.
rfiRadioIsolatorFeed	R	Hardware feedback from the isolator attentuation switchout mechanism.
rfiRadioIsolatorMode	R/W	Sets the isolator for normal transmission (high attenuation on RF diag port) or for listening to signal from antenna, for network testing (low attenuation on RF diag port, transmission disabled).
rfiRadioTxDelay	R/W	Applies an artificial transmission delay to all data. Can be used for matching delay in heterogeneous transmitter networks.
rfiRadioTxIdletime	R	Time since last transmission ended (if not transmitting), or zero if currently transmitting.
rfiRadioTxOntime	R	Time since current transmission started (if transmitting), or zero if not currently transmitting.
rfiRadioTxPttAuto	R/W	Setting to enable or disable the automatic Push-To-Talk on data feature.
rfiRadioTxPttAutoTmout	R/W	No-data timeout for the automatic PTT feature.
rfiRadioTxPttOverride	R/W	Master override allowing transmission to be completely disabled, regardless of PTT inputs.
rfiRadioTxPttStatus	R	If PTT is currently disabled, describes what is the source of the override.
rfiRadioTxPttTofftime	R/W	Delay before turning off the transmitter after PTT off is signalled.
rfiRadioTxPwrCtrlLvl	R/W	Transmitter output power setting.
rfiRadioTxStatus	R	Current transmission status. May be off, on, or waiting for PTT delay to expire before turning off.
rfiRadioTxTimeout	R/W	Continuous transmission time, in seconds, which will cause a Transmit Timeout fault to occur. By default this will disable further transmission until the fault is cleared.
rfiRadioTxTimeouten	R/W	Enable or disable the transmit timeout feature.
Sensors		
rfiSensTblCutoffHi	R/W	Upper cutoff value for this sensor. Measurements which exceed

		this cutoff cause a fault.
rfiSensTblCutoffLo	R/W	Lower cutoff value for this sensor. Measurements lower than this cutoff cause a fault.
rfiSensTblFault	R	Current fault status associated with this sensor.
rfiSensTblMax	R	Maximum recorded sensor value since the statistics were reset.
rfiSensTblMin	R	Minimum recorded sensor value since the statistics were reset.
rfiSensTblName	R	Name of the fault in this row of the table.
rfiSensTblVal	R	Current measured sensor value.

Table 31: SNMP Diagnostic Parameters

Appendix D. Hayes AT Reference

Note: Not all firmware versions implement all AT commands. For an AT command reference specific to your firmware version, please contact sales@stiengineering.com.au.

AT-only commands

Print All Sensors
Legacy command for printing all sensor values as a comma separated list.
ATI100: Runs the Print All Sensors routine

Print Faults Mask
Prints a comma separated list of active faults, each fault represented by their index. Prints 'None.' if there are no faults active.
ATI101: Runs the Print Faults Mask routine

Print Upper Limits
Legacy command for printing all sensor upper cutoff values as a comma separated list.
ATI102: Runs the Print Upper Limits routine

Print Lower Limits
Legacy command for printing all sensor lower cutoff values as a comma separated list.
ATI103: Runs the Print Lower Limits routine

Print Sensor Minimums
Legacy command for printing all sensor minimum recorded values since last sensor history reset as a comma separated list.
ATI105: Runs the Print Sensor Minimums routine

Print Sensor Maximums
Legacy command for printing all sensor maximum recorded values since last sensor history reset as a comma separated list.
ATI106: Runs the Print Sensor Maximums routine

Read Faults Detailed
Print all active faults, in the format "<FaultNumber>:<ActiveDuration>:<Counter>, ..."
ATI180: Runs the Read Faults Detailed routine

Online
(Alias for ATO) Exit command parsing mode and go online
ATO0: Runs the Online routine.

Online
Exit command parsing mode and go online
ATO: Runs the Online routine.

Reset
Perform a software reset
AT&T9: Runs the Reset routine.

RUF Init

Initialise the length for a .ruf file transfer
ATU1=*n*: Runs the RUF Init routine where *n* is the length of the .ruf file in bytes.

RUF Block
Send a data block as part of a .ruf file transfer, the CRC over the data is returned
ATU2=*n*: Runs the RUF Block routine where *n* is the .ruf file data block.

RUF Status
Query the status of an in-progress .ruf file transfer
ATU4: Runs the RUF Status routine.

RUF Query
Query the most recently completed .ruf file transfer
ATU5: Runs the RUF Query routine.

RUF Update
Execute an update to the most recently transferred .ruf file
ATU6: Runs the RUF Update routine.

Save All
Write through all AT command sets since power-on-reset to EEPROM
AT&W: Runs the Save All routine.

AT Error Code
Display an error code representing the last error processing an AT command.
AT%14: Runs the AT Error Code routine.

AT Error String
Display a string representing the last error processing an AT command.
AT%15: Runs the AT Error String routine.

Password
Set the device password
AT%23=*n*: Runs the Password routine where *n* is the new password.

Open Menu
Open the terminal menu on this stream
AT?: Runs the Open Menu routine.

Stream Index
Show the index number of this stream
AT&S0: Runs the Stream Index routine.

Cruise Control Menu

Product String
The model name for this device.
ATI0: Returns the current value of Product String.

Manufacture Date
Date on which this device was manufactured.
ATI5: Returns the current value of Manufacture Date.

Serial Number
Factory assigned serial number for this device.
ATI6: Returns the current value of Serial Number.

Radio Menu

Current Transmit Time
Time since current transmission started (if transmitting), or zero if not currently transmitting.
ATP119: Returns the current value of Current Transmit Time.

Transmitter Idle Time
Time since last transmission ended (if not transmitting), or zero if currently transmitting.
ATP116: Returns the current value of Transmitter Idle Time.

PTT Override Status
If PTT is currently disabled, describes what is the source of the override.
ATP6: Returns the current value of PTT Override Status.

PTT Override (Stored)
Master override allowing transmission to be completely disabled, regardless of PTT inputs.
ATP7: Returns the current value of PTT Override.
ATP7=*n* sets PTT Override to *n*.
Enumeration values:
0 = Enable Transmit
1 = Disable Transmit

PTT Turn Off Delay (Stored)
Delay before turning off the transmitter after PTT off is signalled.
ATP112: Returns the current value of PTT Turn Off Delay.
ATP112=*n[.m]*.: Sets the value of PTT Turn Off Delay to *n* s, given that 0.000 <= *n* <= 65.535.

Enable Transmit Timeout (Stored)
Enable or disable the transmit timeout feature.
ATP117: Returns the current value of Enable Transmit Timeout.
ATP117=*n* sets Enable Transmit Timeout to *n*.
Enumeration values:
0 = False
1 = True

Transmit Timeout (Stored)
Continuous transmission time, in seconds, which will cause a Transmit Timeout fault to occur. By default this will disable further transmission until the fault is cleared.
ATP118: Returns the current value of Transmit Timeout.
ATP118=*n[.m]*.: Sets the value of Transmit Timeout to *n* s, given that 0.000 <= *n* <= 4294967.295.

Absolute Delay Adjustment (Stored)
Applies an artificial transmission delay to all data. Can be used for matching delay in heterogeneous transmitter networks.
ATI154: Returns the current value of Absolute Delay Adjustment.
ATI154=*n[.m]*.: Sets the value of Absolute Delay Adjustment to *n* ms, given that 0.000 <= *n* <= 40.000.
Can return the following error codes:

1 = Delay must be in increments of 5 us.
2 = Cannot change while transmitting
3 = Warning! External data clock must be used for 4-level protocols
4 = Unsupported with this hardware

Power Menu

Transmitter Status

Current transmission status. May be off, on, or waiting for PTT delay to expire before turning off.
ATP115: Returns the current value of Transmitter Status.
Enumeration values:
0 = Off
1 = Transmitting
2 = PTT Turn Off Delay

(Distributer) Max Tx Power (Stored)

Override the maximum configurable transmit power to a sublevel of the radios capabilities.
ATS209: Returns the current value of Max Tx Power.
ATS209=*n*.: Sets the value of Max Tx Power to *n* W, given that 20 <= *n* <= 250.
Can return the following error codes:
1 = Maximum power has been restricted by the distributor
2 = Max Tx Power cannot be set lower than Tx Power
3 = Tx Power cannot be set to this value
4 = Cannot change Tx Power while transmitting
5 = Insufficient access rights

Tx Power (Stored)

Transmitter output power setting.
ATS45: Returns the current value of Tx Power.
ATS45=*n*.: Sets the value of Tx Power to *n* W, given that 20 <= *n* <= 250.
Can return the following error codes:
1 = Maximum power has been restricted by the distributor
2 = Max Tx Power cannot be set lower than Tx Power
3 = Tx Power cannot be set to this value
4 = Cannot change Tx Power while transmitting
5 = Insufficient access rights

Power Foldback (Stored)

The percent of transmit power in Watts to foldback to when the scale transmit power fault action goes active.
ATP120: Returns the current value of Power Foldback.
ATP120=*n*.: Sets the value of Power Foldback to *n* %%, given that 0 <= *n* <= 100.

Transmit On

Software PTT method to key up the transmitter.
ATP3: Runs the Transmit On routine.

Transmit Off

Software PTT method to key down the transmitter.
ATP2: Runs the Transmit Off routine.

Channel Menu

Tx Range

ATS183: Returns the current value of Tx Range.

Current Tx Freq
ATS184: Returns the current value of Current Tx Freq.

Raster
Read-only node for viewing the raster frequency of the radio.
ATS185: Returns the current value of Raster.
Enumeration values:
0 = 0.001 kHz
1 = 2.500 kHz
2 = 5.000 kHz
3 = 6.250 kHz
4 = 7.500 kHz
5 = 10.000 kHz
6 = 12.500 kHz
7 = 15.000 kHz
8 = 20.000 kHz
9 = 25.000 kHz
10 = 30.000 kHz

Channel Width
Read-only node for viewing the channel width of the radio.
ATS186: Returns the current value of Channel Width.
Enumeration values:
0 = 12.500 KHz
1 = 25.000 KHz

Current Channel (Stored)
Currently selected radio channel number.
ATS54: Returns the current value of Current Channel.
ATS54=*n*.: Sets the value of Current Channel to *n* , given that 1 <= *n* <= 17.
Can return the following error codes:
1 = Exceeds channel count.
2 = Less than current channel.
3 = Cannot change while transmitting.

(Distributer) Channel Count (Stored)
Number of channels that can be switched between using the current channel setting.
ATS210: Returns the current value of Channel Count.
ATS210=*n*.: Sets the value of Channel Count to *n* , given that 1 <= *n* <= 16.
Can return the following error codes:
1 = Exceeds channel count.
2 = Less than current channel.
3 = Cannot change while transmitting.

Advanced Menu

(Distributer) Tx Base Freq
Minimum transmit frequency.
ATS211: Returns the current value of Tx Base Freq.

ATS211=*n[.m]*.: Sets the value of Tx Base Freq to *n* MHz, given that 130.000000 <= *n* <= 1050.000000.
Can return the following error codes:
1 = Not a multiple of the raster.
2 = Not within bandwidth.
3 = Invalid channel.
4 = Channel frequency violation.
5 = Insufficient access rights.
6 = Cannot change while transmitting.
7 = Unsupported or restricted with this hardware.

(Distributer) Bandwidth
The amount of usable frequncies available to the radio.
ATS212: Returns the current value of Bandwidth.
ATS212=*n[.m]*.: Sets the value of Bandwidth to *n* MHz, given that 1.000000 <= *n* <= 100.000000.
Can return the following error codes:
1 = Not a multiple of the raster.
2 = Not within bandwidth.
3 = Invalid channel.
4 = Channel frequency violation.
5 = Insufficient access rights.
6 = Cannot change while transmitting.
7 = Unsupported or restricted with this hardware.

(Distributer) Raster
Frequency raster. All channel frequencies must be divisible by the raster.
ATS57: Returns the current value of Raster.
ATS57=*n* sets Raster to *n*.
Enumeration values:
0 = 0.001 kHz
1 = 2.500 kHz
2 = 5.000 kHz
3 = 6.250 kHz
4 = 7.500 kHz
5 = 10.000 kHz
6 = 12.500 kHz
7 = 15.000 kHz
8 = 20.000 kHz
9 = 25.000 kHz
10 = 30.000 kHz
Can return the following error codes:
1 = Not a multiple of the raster.
2 = Not within bandwidth.
3 = Invalid channel.
4 = Channel frequency violation.
5 = Insufficient access rights.
6 = Cannot change while transmitting.
7 = Unsupported or restricted with this hardware.

Channel Width
The radios channel width.
ATS66: Returns the current value of Channel Width.

ATS66=*n* sets Channel Width to *n*.
Enumeration values:
0 = 12.500 KHz
1 = 25.000 KHz
Can return the following error codes:
1 = Not a multiple of the raster.
2 = Not within bandwidth.
3 = Invalid channel.
4 = Channel frequency violation.
5 = Insufficient access rights.
6 = Cannot change while transmitting.
7 = Unsupported or restricted with this hardware.

Channel Table

Tx Freq (Stored)
Radio channel transmit frequency.
ATS55[a]: Returns the current value of Tx Freq.
ATS55[a]=*n[.m]*.: Sets the value of Tx Freq to *n* MHz, given that 130.000000 <= *n* <= 1050.000000.
Where: a = Channel Table table index (starting from 1).
Can return the following error codes:
1 = Not a multiple of the raster.
2 = Not within bandwidth.
3 = Invalid channel.
4 = Channel frequency violation.
5 = Insufficient access rights.
6 = Cannot change while transmitting.
7 = Unsupported or restricted with this hardware.

Reference Menu

Current Reference
The current reference being used to generate channel frequencies.
ATI122: Returns the current value of Current Reference.
Enumeration values:
0 = Internal
1 = External
2 = Pending

External Reference
The state of the external reference.
ATI123: Returns the current value of External Reference.
Enumeration values:
0 = Detected
1 = Not Detected
2 = Pending

Reference Mode (Stored)
The reference selection method. 'Internal' uses the internal 10 MHz reference. 'External With Failover' will attempt to use the external reference, but switch (until cleared) to the internal upon failure. 'External Only' will always try and use the external reference but disable transmission when it cannot be locked to. 'External When Available' will use External as a preference whenever present, while falling back to internal when absent.

ATI120: Returns the current value of Reference Mode.
ATI120=*n* sets Reference Mode to *n*.
Enumeration values:
0 = Internal
1 = External With Failover
2 = External Only
3 = External When Available

Ext. Ref. Frequency (Stored)
Configures the frequency of the external reference.
ATI121: Returns the current value of Ext. Ref. Frequency.
ATI121=*n* sets Ext. Ref. Frequency to *n*.
Enumeration values:
0 = 5 MHz
1 = 10 MHz

Isolator Menu

Feedback
Hardware feedback from the isolator attentuation switchout mechanism.
ATP33: Returns the current value of Feedback.
Enumeration values:
0 = Transmit Mode
1 = Switching
2 = Listening Mode
3 = Fault

Isolator Mode
Sets the isolator for normal transmission (high attenuation on RF diag port) or for listening to signal from antenna, for network testing (low attenuation on RF diag port, transmission disabled).
ATP31: Returns the current value of Isolator Mode.
ATP31=*n* sets Isolator Mode to *n*.
Enumeration values:
0 = Set for Transmitting
1 = Set for Listening
Can return the following error codes:
1 = Warning! Transmit has been disabled!
2 = Transmit re-enabled
3 = Timeout switching to transmit mode

Listening Mode Timeout (Stored)
A timeout in seconds that starts when the isolator is set to listening mode. When the timeout expires the isolator will automatically return to transmitting mode.
ATP35: Returns the current value of Listening Mode Timeout.
ATP35=*n[.m]*.: Sets the value of Listening Mode Timeout to *n* s, given that 0.000 <= *n* <= 65.535.

Enable Listening Timeout (Stored)
Enables or disables listening mode timeout.
ATP34: Returns the current value of Enable Listening Timeout.
ATP34=*n* sets Enable Listening Timeout to *n*.
Enumeration values:

0 = Disabled
1 = Enabled

Paging Protocols Menu

POCSAG Deviation
ATP105: Returns the current value of POCSAG Deviation.

FLEX Deviation
ATP106: Returns the current value of FLEX Deviation.

Encoding Mode (Stored)
Configure the encoding source for paging transmitter data.
ATN10: Returns the current value of Encoding Mode.
ATN10=*n* sets Encoding Mode to *n*.
Enumeration values:
0 = External Encoder
1 = TNPP Serial
2 = TNPP TCP:64250
3 = TNPP UDP:64250
4 = PET/TAP Serial
5 = PET/TAP TCP:64250
6 = PET/TAP UDP:64250
7 = Datagram Serial
8 = Datagram TCP:64250
9 = Datagram UDP:64250
Can return the following error codes:
1 = Not supported with this firmware/hardware/FPGA

PET/TAP Menu

Current State
ATN43: Returns the current value of Current State.
Enumeration values:
0 = Idle
1 = Logon
2 = Logged In
3 = Message [Capcode]
4 = Message [Message]
5 = Message [Dest.]
6 = Message [Checksum]
7 = Logoff
8 = Not Running
9 = Pending Proxy Response
10 = Proxy Success
11 = Proxy Failure

Line Separator (Stored)
The line separator output between new lines. Configurable for compatibility across terminals.
ATN15: Returns the current value of Line Separator.
ATN15=*n* sets Line Separator to *n*.
Enumeration values:

0 = <CR>
1 = <CR><LF>

Timeout (Stored)
Intercharacter timeout before purging input buffer and reverting to idle state.
ATN16: Returns the current value of Timeout.
ATN16=*n[.m]*.: Sets the value of Timeout to *n* s, given that 0.5 <= *n* <= 10.0.

Baud Rate (Stored)
Baud rate at which encoded POSCAG pages are sent over the air.
ATN19: Returns the current value of Baud Rate.
ATN19=*n* sets Baud Rate to *n*.
Enumeration values:
0 = 512
1 = 1200
2 = 2400

Stay Logged In (Stored)
Remains logged in indefinitely after receiving a valid login string.
ATN41: Returns the current value of Stay Logged In.
ATN41=*n* sets Stay Logged In to *n*.
Enumeration values:
0 = False
1 = True

Implied Login (Stored)
Option to skip login sequence if a <STX> is read while waiting for wake up sequence.
ATN42: Returns the current value of Implied Login.
ATN42=*n* sets Implied Login to *n*.
Enumeration values:
0 = Disabled
1 = PG1
2 = PG3

Detect Numeric Pages (Stored)
When enabled, will encode a POCSAG page in numeric format (rather than alpha-numeric) if the message is wholly formed by digits.
ATN14: Returns the current value of Detect Numeric Pages.
ATN14=*n* sets Detect Numeric Pages to *n*.
Enumeration values:
0 = False
1 = True

Group Code (Stored)
Allows the use of the final character or digit in the Pager ID field of a message submission to determine the function bits of the paging message.
ATN13: Returns the current value of Group Code.
ATN13=*n* sets Group Code to *n*.
Enumeration values:

0 = None
1 = Trailing Character
2 = Trailing Digit

Reset Statistics
Reset the TAP/PET statistics accumulated since start-up.
ATN17: Runs the Reset Statistics routine.

Statistics Table
Name

Value
ATN18[a]: Returns the current value of Value.
Where: a = Statistics table index (starting from 0).

TNPP Menu
Address (Stored)
The address of this TNPP node.
ATN23: Returns the current value of Address.
ATN23=*n*.: Sets the value of Address to *n* , given that 0 <= *n* <= 65535.

Promiscuous Mode (Stored)
When enabled, this node will accept packets destined for any address.
ATN24: Returns the current value of Promiscuous Mode.
ATN24=*n* sets Promiscuous Mode to *n*.
Enumeration values:
0 = False
1 = True

Transparent CRC support (Stored)
ATN25: Returns the current value of Transparent CRC support.
ATN25=*n* sets Transparent CRC support to *n*.
Enumeration values:
0 = False
1 = True
Can return the following error codes:
1 = Feature Unsupported!

Address Extension support (Stored)
ATN26: Returns the current value of Address Extension support.
ATN26=*n* sets Address Extension support to *n*.
Enumeration values:
0 = False
1 = True
Can return the following error codes:
1 = Feature Unsupported!

Multi-Block support (Stored)
ATN27: Returns the current value of Multi-Block support.
ATN27=*n* sets Multi-Block support to *n*.
Enumeration values:

0 = False
1 = True
Can return the following error codes:
1 = Feature Unsupported!

Large Packet support (Stored)
ATN28: Returns the current value of Large Packet support.
ATN28=*n* sets Large Packet support to *n*.
Enumeration values:
0 = False
1 = True
Can return the following error codes:
1 = Feature Unsupported!

Reset TNPP Statistics
ATN22: Runs the Reset TNPP Statistics routine.

TNPP Statistics Table
Name
ATN20[a]: Returns the current value of Name .
Where: a = TNPP Statistics table index (starting from 0).

Count
ATN21[a]: Returns the current value of Count.
Where: a = TNPP Statistics table index (starting from 0).

Datagram Menu
Statistics Table
Name

POCSAG Menu
Preamble Length (Stored)
Length of the preamble sent prior to paging data.
ATN30: Returns the current value of Preamble Length.
ATN30=*n*.: Sets the value of Preamble Length to *n* bit, given that 32 <= *n* <= 2304.
Can return the following error codes:
1 = Value must be an integer multiple of 32.

Function Override (Stored)
Override the function bits in the address codeword. Default (`Message Encoding`) is to set the function bits based on message encoding: Numeric: 00, Tone: 01, Alpha-numeric: 11.
ATN11: Returns the current value of Function Override.
ATN11=*n* sets Function Override to *n*.
Enumeration values:
0 = Message Encoding
1 = Always 00
2 = Always 01
3 = Always 10
4 = Always 11

Purge Timeout (Stored)
Duration to wait to collate paging messages for sending over the air.
ATN29: Returns the current value of Purge Timeout.
ATN29=*n*.: Sets the value of Purge Timeout to *n* ms, given that 250 <= *n* <= 5000.

Reset Statistics
ATN40: Runs the Reset Statistics routine.

Tx Delay (Stored)
Duration to wait before transmitting any page message.
ATN50: Returns the current value of Tx Delay.
ATN50=*n*.: Sets the value of Tx Delay to *n* s, given that 0 <= *n* <= 60.

Page Repeat Rules Table

Enabled (Stored)
Whether this rule is enabled.
ATN36[a]: Returns the current value of Enabled.
ATN36[a]=*n* sets Enabled to *n*.
Enumeration values:
0 = False
1 = True
Where: a = Page Repeat Rules table index (starting from 0).

Capcode (Stored)
The Capcode to match for this rule. 0 matches any capcode, all other integers match the specific capcode.
ATN37[a]: Returns the current value of Capcode.
ATN37[a]=*n*.: Sets the value of Capcode to *n* , given that 0 <= *n* <= 2097152.
Where: a = Page Repeat Rules table index (starting from 0).

Delay (Stored)
The delay to insert between page repetitions.
ATN38[a]: Returns the current value of Delay.
ATN38[a]=*n*.: Sets the value of Delay to *n* s, given that 4 <= *n* <= 60.
Where: a = Page Repeat Rules table index (starting from 0).

Count (Stored)
The number of times to repeat pages.
ATN39[a]: Returns the current value of Count.
ATN39[a]=*n*.: Sets the value of Count to *n* , given that 1 <= *n* <= 5.
Where: a = Page Repeat Rules table index (starting from 0).

POCSAG MAC Statistics Table

Name
ATN34[a]: Returns the current value of Name.
Where: a = POCSAG MAC Statistics table index (starting from 0).

Count
ATN35[a]: Returns the current value of Count.
Where: a = POCSAG MAC Statistics table index (starting from 0).

Test Menu

Status
Current status of any in progress survey.
ATG171: Returns the current value of Status.
Enumeration values:
0 = Idle
1 = In Progress
2 = Error: External Encoder
3 = Finished

Message
The message to send during the survey.
ATG172: Returns the current value of Message.
ATG172=s: Sets the value of Message to s, given that 0 <= length(s) <= 30.

Encoding
The character encoding to use.
ATG173: Returns the current value of Encoding.
ATG173=*n* sets Encoding to *n*.
Enumeration values:
0 = Alpha-numeric
1 = Numeric

Capcode
The capcode (address) to send the survey messages to.
ATG174: Returns the current value of Capcode.
ATG174=*n*.: Sets the value of Capcode to *n* , given that 1 <= *n* <= 2097152.

Baud Rate
The baud rate of survey messages.
ATG175: Returns the current value of Baud Rate.
ATG175=*n* sets Baud Rate to *n*.
Enumeration values:
0 = 512
1 = 1200
2 = 2400

Append
Optionally append timestamp and/or message count to survey messages.
ATG176: Returns the current value of Append.
ATG176=*n* sets Append to *n*.
Enumeration values:
0 = Nothing
1 = Count
2 = Timestamp
3 = Count and Timestamp

Interval
The interval in which to send survey messages.
ATG177: Returns the current value of Interval.
ATG177=*n*.: Sets the value of Interval to *n* s, given that 1 <= *n* <= 120.

Duration
The total duration a survey should run for before automatically stopping. A duration of 0 min will run until the survey is manually stopped.
ATG178: Returns the current value of Duration.
ATG178=*n*.: Sets the value of Duration to *n* mins, given that 0 <= *n* <= 720.

Begin Survey
Starts the survey mode using the settings configured.
ATG180: Runs the Begin Survey routine.

Stop Survey
Stop the survey early or used to stop a survey without a defined duration.
ATG181: Runs the Stop Survey routine.

Send One Message
Send a single message using the settings configured.
ATG182: Runs the Send One Message routine.

Event Menu

Advanced Menu

Custom Deviation (Stored)
The deviation of the custom paging protocol.
ATP103: Returns the current value of Custom Deviation.
ATP103=*n[.m]*.: Sets the value of Custom Deviation to *n* Hz, given that 0.0 <= *n* <= 4800.0.
Can return the following error codes:
1 = External data clock required for 4-level protocol
2 = Insufficient access
3 = Warning! External data clock now enabled.

Custom FSK level (Stored)
The FSK-levels of the custom paging protocol.
ATP104: Returns the current value of Custom FSK level.
ATP104=*n* sets Custom FSK level to *n*.
Enumeration values:
0 = 2-level
1 = 4-level
Can return the following error codes:
1 = External data clock required for 4-level protocol
2 = Insufficient access
3 = Warning! External data clock now enabled.

Profiles Table

Paging Protocol (Stored)
Configured paging protocol for this profile.
ATP91[a]: Returns the current value of Paging Protocol.
ATP91[a]=*n* sets Paging Protocol to *n*.
Enumeration values:
0 = POCSAG
1 = FLEX-2
2 = FLEX-4
3 = Custom

Where: a = Profiles table index (starting from 0).
Can return the following error codes:
1 = External data clock required for 4-level protocol
2 = Insufficient access
3 = Warning! External data clock now enabled.

Carrier Offset (Stored)
Configured carrier frequency offset for this profile.
ATP92[a]: Returns the current value of Carrier Offset.
ATP92[a]=[+/-]*n*.: Sets the value of Carrier Offset to *n* Hz, given that -4000 <= *n* <= 4000.
Where: a = Profiles table index (starting from 0).
Can return the following error codes:
1 = External data clock required for 4-level protocol
2 = Insufficient access
3 = Warning! External data clock now enabled.

Ext. Data Clock (Stored)
Configures whether to use an external clock to synchronise data. An external clock is mandatory for 4-level protocols.
ATP93[a]: Returns the current value of Ext. Data Clock.
ATP93[a]=*n* sets Ext. Data Clock to *n*.
Enumeration values:
0 = Disabled
1 = Enabled
Where: a = Profiles table index (starting from 0).
Can return the following error codes:
1 = External data clock required for 4-level protocol
2 = Insufficient access
3 = Warning! External data clock now enabled.

Encryption Menu

Encryption (Stored)
ATS220: Returns the current value of Encryption.
ATS220=*n* sets Encryption to *n*.
Enumeration values:
0 = Disabled
1 = Enabled
Can return the following error codes:
1 = WARNING - The current time does not appear to be valid, please correct to ensure message tampering can be determined.

Encrypt All (Stored)
ATS221: Returns the current value of Encrypt All.
ATS221=*n* sets Encrypt All to *n*.
Enumeration values:
0 = False
1 = True

Key Generator (Stored)

ATS222: Returns the current value of Key Generator.
ATS222=*n* sets Key Generator to *n*.
Enumeration values:
0 = Disabled
1 = Enabled

Vendor (Stored)
ATS223: Returns the current value of Vendor.
ATS223=*n* sets Vendor to *n*.
Enumeration values:
0 = TPL

End Password Session
ATS224: Runs the End Password Session routine.

Password
ATS225: Returns the current value of Password.
ATS225=s: Sets the value of Password to s, given that 0 <= length(s) <= 17.

Encryption ID (Stored)
ATS233: Returns the current value of Encryption ID.
ATS233=s: Sets the value of Encryption ID to s, given that 1 <= length(s) <= 6.

Key Generator Table

Capcode (Stored)
ATS226[a]: Returns the current value of Capcode.
ATS226[a]=*n*.: Sets the value of Capcode to *n* , given that 0 <= *n* <= 2097151.
Where: a = Key Generator table index (starting from 0).
Can return the following error codes:
1 = Enable the Key Generator to generate keys from capcodes.

Upper Value (Hex)
ATS227[a]: Returns the current value of Upper Value (Hex) .
Where: a = Key Generator table index (starting from 0).

Lower Value (Hex)
ATS228[a]: Returns the current value of Lower Value (Hex) .
Where: a = Key Generator table index (starting from 0).

Key Entry Table

Top Value (Hex) (Stored)
ATS229[a]: Returns the current value of Top Value (Hex).
ATS229[a]=s: Sets the value of Top Value (Hex) to s, given that 0 <= length(s) <= 32.
Where: a = Key Entry table index (starting from 0).
Can return the following error codes:
1 = Incorrect length - expected 16 characters.
2 = Invalid character(s) - please enter only 0-9 and A-F.
3 = Disable the Key Generator to manually enter keys.

Upper Value (Hex) (Stored)

ATS230[a]: Returns the current value of Upper Value (Hex).
ATS230[a]=s: Sets the value of Upper Value (Hex) to s, given that 0 <= length(s) <= 32.
Where: a = Key Entry table index (starting from 0).
Can return the following error codes:
1 = Incorrect length - expected 16 characters.
2 = Invalid character(s) - please enter only 0-9 and A-F.
3 = Disable the Key Generator to manually enter keys.

Lower Value (Hex) (Stored)
ATS231[a]: Returns the current value of Lower Value (Hex).
ATS231[a]=s: Sets the value of Lower Value (Hex) to s, given that 0 <= length(s) <= 32.
Where: a = Key Entry table index (starting from 0).
Can return the following error codes:
1 = Incorrect length - expected 16 characters.
2 = Invalid character(s) - please enter only 0-9 and A-F.
3 = Disable the Key Generator to manually enter keys.

Bottom Value (Hex) (Stored)
ATS232[a]: Returns the current value of Bottom Value (Hex).
ATS232[a]=s: Sets the value of Bottom Value (Hex) to s, given that 0 <= length(s) <= 32.
Where: a = Key Entry table index (starting from 0).
Can return the following error codes:
1 = Incorrect length - expected 16 characters.
2 = Invalid character(s) - please enter only 0-9 and A-F.
3 = Disable the Key Generator to manually enter keys.

Encrypted Message Capcode Range Table

Capcodes (Stored)
ATS242[a]: Returns the current value of Capcodes.
ATS242[a]=*n*.: Sets the value of Capcodes to *n* , given that 0 <= *n* <= 2097152.
Where: a = Encrypted Message Capcode Range table index (starting from 0).
Can return the following error codes:
1 = Max cannot be less than Min.

Individual Capcodes Table

Capcodes (Stored)
ATS241[a]: Returns the current value of Capcodes.
ATS241[a]=*n*.: Sets the value of Capcodes to *n* , given that 0 <= *n* <= 2097152.
Where: a = Individual Capcodes table index (starting from 0).

Fan Control Menu

Sensed Temp.
Current temperature at sensor used for fan control.
ATP109: Returns the current value of Sensed Temp..

Time Until Fan Test
ATP111: Returns the current value of Time Until Fan Test.

Fan Override (Stored)
Manual fan override (allows fans to be forced on).
ATP22: Returns the current value of Fan Override.

ATP22=*n* sets Fan Override to *n*.
Enumeration values:
0 = Normal
1 = Always On

Sensor To Use (Stored)
Temperature sensor used for fan control.
ATP108: Returns the current value of Sensor To Use.
ATP108=*n* sets Sensor To Use to *n*.
Enumeration values:
0 = Baseband Sensor
1 = PA Sensor
2 = Driver Sensor
3 = PA/Driver Ambient Sensor
4 = Isolator Sensor
5 = Baseband Thermistor
6 = PA Group Average
7 = Hottest Sensor
8 = PA Group Sensors

Turn On Temp. (Stored)
Sensed temperature above which fans will be turned on.
ATP20: Returns the current value of Turn On Temp..
ATP20=[+/-]*n*.: Sets the value of Turn On Temp. to *n* deg C, given that -128 <= *n* <= 127.

Turn Off Temp. (Stored)
Sensed temperature below which fans will be turned off.
ATP21: Returns the current value of Turn Off Temp..
ATP21=[+/-]*n*.: Sets the value of Turn Off Temp. to *n* deg C, given that -128 <= *n* <= 127.

Fan Test Interval (Stored)
Interval in hours between fan self-tests.
ATP110: Returns the current value of Fan Test Interval.
ATP110=*n*.: Sets the value of Fan Test Interval to *n* hrs, given that 12 <= *n* <= 48.

Sensors Menu

(Distributer) Fault Reporting (Stored)
ATI213: Returns the current value of Fault Reporting.
ATI213=*n* sets Fault Reporting to *n*.
Enumeration values:
0 = Disabled
1 = Enabled

(Distributer) Fail-safes (Stored)
ATI204: Returns the current value of Fail-safes.
ATI204=*n* sets Fail-safes to *n*.
Enumeration values:
0 = Disabled
1 = Enabled

Sensor Configuration Menu

Reset Cutoffs
Revert the sensor upper and lower cutoffs to the firmware defined defaults.
ATI207: Runs the Reset Cutoffs routine.

Reset Min/Max
Reset the historical minimums and maximums of monitored sensor values.
ATI104: Runs the Reset Min/Max routine.

Status Parameters Table

Name
Name of the sensor and its unit in this row of the table.
ATI176[a]: Returns the current value of Name.
Where: a = Status Parameters table index (starting from 0).

Current
Current measured sensor value.
ATI90[a]: Returns the current value of Current.
Where: a = Status Parameters table index (starting from 0).

Relevant Value
The current measured sensor value if it is relevant. Otherwise -2000000
ATI99[a]: Returns the current value of Relevant Value.
Where: a = Status Parameters table index (starting from 0).

Maximum
Maximum recorded sensor value since the statistics were reset.
ATI91[a]: Returns the current value of Maximum.
Where: a = Status Parameters table index (starting from 0).

Minimum
Minimum recorded sensor value since the statistics were reset.
ATI92[a]: Returns the current value of Minimum.
Where: a = Status Parameters table index (starting from 0).

Current State
Current fault status associated with this sensor.
ATI177[a]: Returns the current value of Current State.
Enumeration values:
0 = Nominal
1 = Lower Fault
2 = Upper Fault
Where: a = Status Parameters table index (starting from 0).

Upper Cutoff
Upper cutoff value for this sensor. Measurements which exceed this cutoff cause a fault.
ATI93[a]: Returns the current value of Upper Cutoff.
Where: a = Status Parameters table index (starting from 0).

Hysteresis (Stored)
Hysteresis value for this sensor. When a sensor is near the cutoff value this helps reduce excessive fault toggling.

ATI97[a]: Returns the current value of Hysteresis.
ATI97[a]=*n*.: Sets the value of Hysteresis to *n* , given that 0 <= *n* <= 65535.
Where: a = Status Parameters table index (starting from 0).
Can return the following error codes:
1 = Invalid cutoff value. Upper cutoff > Lower cutoff
3 = Hysteresis value too large for configured cutoffs.

Lower Cutoff
Lower cutoff value for this sensor. Measurements lower than this cutoff cause a fault.
ATI96[a]: Returns the current value of Lower Cutoff.
Where: a = Status Parameters table index (starting from 0).

Reset Sensor Min/Max
Reset the historical minimum and maximum for this sensor.
ATI181[a]: Runs the Reset Sensor Min/Max routine.
Where: a = Status Parameters table index (starting from 0).

Sensor Interpolation Menu
HW Build Variation Table
Transmit Power Variation Table
Name
Name of the sensor and its unit in this row of the table.
ATG156[a]: Returns the current value of Name.
Where: a = Transmit Power Variation table index (starting from 0).

20W Lower Cutoff (Stored)
ATG157[a]: Returns the current value of 20W Lower Cutoff.
ATG157[a]=[+/-]*n*.: Sets the value of 20W Lower Cutoff to *n* , given that -2147483648 <= *n* <= 2147483647.
Where: a = Transmit Power Variation table index (starting from 0).
Can return the following error codes:
1 = Invalid cutoff value. Upper cutoff > Lower cutoff
3 = Hysteresis value too large for configured cutoffs.

20W Upper Cutoff (Stored)
ATG158[a]: Returns the current value of 20W Upper Cutoff.
ATG158[a]=[+/-]*n*.: Sets the value of 20W Upper Cutoff to *n* , given that -2147483648 <= *n* <= 2147483647.
Where: a = Transmit Power Variation table index (starting from 0).
Can return the following error codes:
1 = Invalid cutoff value. Upper cutoff > Lower cutoff
3 = Hysteresis value too large for configured cutoffs.

50W Lower Cutoff (Stored)
ATG159[a]: Returns the current value of 50W Lower Cutoff.
ATG159[a]=[+/-]*n*.: Sets the value of 50W Lower Cutoff to *n* , given that -2147483648 <= *n* <= 2147483647.
Where: a = Transmit Power Variation table index (starting from 0).
Can return the following error codes:
1 = Invalid cutoff value. Upper cutoff > Lower cutoff
3 = Hysteresis value too large for configured cutoffs.

50W Upper Cutoff (Stored)
ATG160[a]: Returns the current value of 50W Upper Cutoff.
ATG160[a]=[+/-]*n*.: Sets the value of 50W Upper Cutoff to *n* , given that -2147483648 <= *n* <= 2147483647.
Where: a = Transmit Power Variation table index (starting from 0).
Can return the following error codes:
1 = Invalid cutoff value. Upper cutoff > Lower cutoff
3 = Hysteresis value too large for configured cutoffs.

100W Lower Cutoff (Stored)
ATG161[a]: Returns the current value of 100W Lower Cutoff.
ATG161[a]=[+/-]*n*.: Sets the value of 100W Lower Cutoff to *n* , given that -2147483648 <= *n* <= 2147483647.
Where: a = Transmit Power Variation table index (starting from 0).
Can return the following error codes:
1 = Invalid cutoff value. Upper cutoff > Lower cutoff
3 = Hysteresis value too large for configured cutoffs.

100W Upper Cutoff (Stored)
ATG162[a]: Returns the current value of 100W Upper Cutoff.
ATG162[a]=[+/-]*n*.: Sets the value of 100W Upper Cutoff to *n* , given that -2147483648 <= *n* <= 2147483647.
Where: a = Transmit Power Variation table index (starting from 0).
Can return the following error codes:
1 = Invalid cutoff value. Upper cutoff > Lower cutoff
3 = Hysteresis value too large for configured cutoffs.

200W Lower Cutoff (Stored)
ATG163[a]: Returns the current value of 200W Lower Cutoff.
ATG163[a]=[+/-]*n*.: Sets the value of 200W Lower Cutoff to *n* , given that -2147483648 <= *n* <= 2147483647.
Where: a = Transmit Power Variation table index (starting from 0).
Can return the following error codes:
1 = Invalid cutoff value. Upper cutoff > Lower cutoff
3 = Hysteresis value too large for configured cutoffs.

200W Upper Cutoff (Stored)
ATG164[a]: Returns the current value of 200W Upper Cutoff.
ATG164[a]=[+/-]*n*.: Sets the value of 200W Upper Cutoff to *n* , given that -2147483648 <= *n* <= 2147483647.
Where: a = Transmit Power Variation table index (starting from 0).
Can return the following error codes:
1 = Invalid cutoff value. Upper cutoff > Lower cutoff
3 = Hysteresis value too large for configured cutoffs.

250W Lower Cutoff (Stored)
ATG165[a]: Returns the current value of 250W Lower Cutoff.
ATG165[a]=[+/-]*n*.: Sets the value of 250W Lower Cutoff to *n* , given that -2147483648 <= *n* <= 2147483647.

Where: a = Transmit Power Variation table index (starting from 0).
Can return the following error codes:
1 = Invalid cutoff value. Upper cutoff > Lower cutoff
3 = Hysteresis value too large for configured cutoffs.

250W Upper Cutoff (Stored)
ATG166[a]: Returns the current value of 250W Upper Cutoff.
ATG166[a]=[+/-]*n*.: Sets the value of 250W Upper Cutoff to *n* , given that -2147483648 <= *n* <= 2147483647.
Where: a = Transmit Power Variation table index (starting from 0).
Can return the following error codes:
1 = Invalid cutoff value. Upper cutoff > Lower cutoff
3 = Hysteresis value too large for configured cutoffs.

Other Table

Name
Name of the sensor and its unit in this row of the table.
ATG167[a]: Returns the current value of Name.
Where: a = Other table index (starting from 0).

Lower Cutoff (Stored)
ATG169[a]: Returns the current value of Lower Cutoff.
ATG169[a]=[+/-]*n*.: Sets the value of Lower Cutoff to *n* , given that -2147483648 <= *n* <= 2147483647.
Where: a = Other table index (starting from 0).
Can return the following error codes:
1 = Invalid cutoff value. Upper cutoff > Lower cutoff
3 = Hysteresis value too large for configured cutoffs.

Upper Cutoff (Stored)
ATG168[a]: Returns the current value of Upper Cutoff.
ATG168[a]=[+/-]*n*.: Sets the value of Upper Cutoff to *n* , given that -2147483648 <= *n* <= 2147483647.
Where: a = Other table index (starting from 0).
Can return the following error codes:
1 = Invalid cutoff value. Upper cutoff > Lower cutoff
3 = Hysteresis value too large for configured cutoffs.

Temperature Sensors Table
Voltage Sensors Table
Current Sensors Table
Fan Speeds Table
Power Table
Ratio Table
Faults Menu

Total Faults Counter
ATI156: Returns the current value of Total Faults Counter.

Active Faults
ATI157: Returns the current value of Active Faults.

Combined Fault Status
The status of the combined alarm.
ATI158: Returns the current value of Combined Fault Status.
Enumeration values:
0 = Inactive
1 = Active

Overview Filter
ATI155: Returns the current value of Overview Filter.
ATI155=*n* sets Overview Filter to *n*.
Enumeration values:
0 = Show All
1 = Show Active/Latched
2 = Show Counter > 0

Clear All Faults
Clears all active faults and reverts all fault actions that have been taken.
ATI151: Runs the Clear All Faults routine.

Fault Configuration Menu

Combined Fault Ext. Alarm (Stored)
The hardware alarm associated with the combined alarm.
ATI173: Returns the current value of Combined Fault Ext. Alarm.
ATI173=*n* sets Combined Fault Ext. Alarm to *n*.
Enumeration values:
0 = ALM1
1 = ALM2
2 = ALM3
3 = ALM4
4 = ALM5
5 = ALM6
6 = ALM7
7 = ALM8
8 = ALM9
9 = COMB
10 = ALM10
11 = ALM11
12 = ALM12
13 = ALM13
14 = None

Min. Fault Duration (Stored)
The minimum duration a parameter must be in its fault condition before it is reported.
ATI172: Returns the current value of Min. Fault Duration.
ATI172=*n[.m]*.: Sets the value of Min. Fault Duration to *n* s, given that 0.000 <= *n* <= 65.535.

Fault Beeper (Stored)
ATI174: Returns the current value of Fault Beeper.
ATI174=*n* sets Fault Beeper to *n*.
Enumeration values:

0 = Never
1 = Activity
2 = Heartbeat

Reset Counters
ATI163: Runs the Reset Counters routine.

Faults Table

Fault Name
Name of the fault in this row of the table.
ATI164[a]: Returns the current value of Fault Name.
Where: a = Faults table index (starting from 0).

Status
Indicates whether or not this fault condition is currently active.
ATI165[a]: Returns the current value of Status.
Enumeration values:
0 = Inactive
1 = Active
2 = Latched
3 = Fleeting
Where: a = Faults table index (starting from 0).

Active Duration
Duration for which this fault has been active, or 0 if the fault is not active.
ATI170[a]: Returns the current value of Active Duration.
Where: a = Faults table index (starting from 0).

Ext. Alarm (Stored)
The hardware alarm that will be asserted when this fault is active.
ATI166[a]: Returns the current value of Ext. Alarm.
ATI166[a]=*n* sets Ext. Alarm to *n*.
Enumeration values:
0 = ALM1
1 = ALM2
2 = ALM3
3 = ALM4
4 = ALM5
5 = ALM6
6 = ALM7
7 = ALM8
8 = ALM9
9 = COMB
10 = ALM10
11 = ALM11
12 = ALM12
13 = ALM13
14 = None
Where: a = Faults table index (starting from 0).
Can return the following error codes:

1 = Can only reset fault actions.
2 = Cannot latch a fault.
3 = Changing this requires elevated access rights.
4 = Cannot clear. This source of this fault is still active
5 = Fault actions cannot have fault actions.
6 = This fault must have a latching mechanism.
7 = Cannot select this Alarm - it is being used by the Hot-Standby feature.
8 = The currently selected reference mode (Radio->Reference->Reference Mode) requires this fault to use the Reference Switchover fault action.

Fault Action (Stored)
Configured action to be taken when this fault occurs.
ATI167[a]: Returns the current value of Fault Action.
ATI167[a]=*n* sets Fault Action to *n*.
Enumeration values:
0 = None
1 = Reference Switchover
2 = Disable Transmit
3 = Scale Transmit Power
4 = Enable Current Foldback
5 = Enable Reverse Power Foldback
Where: a = Faults table index (starting from 0).
Can return the following error codes:
1 = Can only reset fault actions.
2 = Cannot latch a fault.
3 = Changing this requires elevated access rights.
4 = Cannot clear. This source of this fault is still active
5 = Fault actions cannot have fault actions.
6 = This fault must have a latching mechanism.
7 = Cannot select this Alarm - it is being used by the Hot-Standby feature.
8 = The currently selected reference mode (Radio->Reference->Reference Mode) requires this fault to use the Reference Switchover fault action.

Latching Mechanism (Stored)
Configured latching mechanism for this fault.
ATI168[a]: Returns the current value of Latching Mechanism.
ATI168[a]=*n* sets Latching Mechanism to *n*.
Enumeration values:
0 = None
1 = SW Reset
Where: a = Faults table index (starting from 0).
Can return the following error codes:
1 = Can only reset fault actions.
2 = Cannot latch a fault.
3 = Changing this requires elevated access rights.
4 = Cannot clear. This source of this fault is still active
5 = Fault actions cannot have fault actions.
6 = This fault must have a latching mechanism.
7 = Cannot select this Alarm - it is being used by the Hot-Standby feature.
8 = The currently selected reference mode (Radio->Reference->Reference Mode) requires this fault to use the Reference Switchover fault action.

Triggers Combined (Stored)
Allows this fault to assert the combined alarm (COMB) in addition to it's configured alarm.
ATI169[a]: Returns the current value of Triggers Combined.
ATI169[a]=*n* sets Triggers Combined to *n*.
Enumeration values:
0 = False
1 = True
Where: a = Faults table index (starting from 0).

Go Standby (Stored)
Configures this fault as a TX FAULT for the purposes of entering standby mode when Hot Standby operation is enabled
ATM17[a]: Returns the current value of Go Standby.
ATM17[a]=*n* sets Go Standby to *n*.
Enumeration values:
0 = False
1 = True
Where: a = Faults table index (starting from 0).

Counter (Stored)
The number of times this fault has occurred since the statistics were reset.
ATI171[a]: Returns the current value of Counter.
ATI171[a]=*n*.: Sets the value of Counter to *n* , given that 0 <= *n* <= 65535.
Where: a = Faults table index (starting from 0).

Faults Overview Table

Fault
ATI159[a]: Returns the current value of Fault.
Where: a = Faults Overview table index (starting from 0).

Status
ATI160[a]: Returns the current value of Status.
Enumeration values:
0 = Inactive
1 = Active
2 = Latched
3 = Fleeting
Where: a = Faults Overview table index (starting from 0).

Active Duration
ATI161[a]: Returns the current value of Active Duration.
Where: a = Faults Overview table index (starting from 0).

Counter
ATI162[a]: Returns the current value of Counter.
Where: a = Faults Overview table index (starting from 0).

Encoder Interface Menu

Encoder Detected

ATP102: Returns the current value of Encoder Detected.
Enumeration values:
0 = No
1 = Yes
2 = Hot Standby

Data Idle Duration
ATP94: Returns the current value of Data Idle Duration.

Data Idle Timeout (Stored)
Configurable timeout for detecting the encoder data inputs as idle, which will cause the encoder data idle fault to go active.
ATP95: Returns the current value of Data Idle Timeout.
ATP95=*n[.m]*.: Sets the value of Data Idle Timeout to *n* s, given that 0.000 <= *n* <= 4294967.295.

Report Data Idle (Stored)
Enable or disable reporting of idle encoder data fault.
ATP96: Returns the current value of Report Data Idle.
ATP96=*n* sets Report Data Idle to *n*.
Enumeration values:
0 = False
1 = True

4-Level Operation (Stored)
Allows swapping of L-/H-bit.
ATP124: Returns the current value of 4-Level Operation.
ATP124=*n* sets 4-Level Operation to *n*.
Enumeration values:
0 = Normal
1 = Legacy

Encoder Protocol Control (Stored)
Allows the active protocol profile to be toggled by hardware input.
ATP99: Returns the current value of Encoder Protocol Control.
ATP99=*n* sets Encoder Protocol Control to *n*.
Enumeration values:
0 = Disabled
1 = Enabled

Encoder Channel Control (Stored)
Allows the active channel to be toggled by hardware input.
ATS180: Returns the current value of Encoder Channel Control.
ATS180=*n* sets Encoder Channel Control to *n*.
Enumeration values:
0 = Disabled
1 = Enabled

Encoder Hardware PTT (Stored)
Allows transmitter PTT to be controlled by hardware input.
ATP97: Returns the current value of Encoder Hardware PTT.

ATP97=*n* sets Encoder Hardware PTT to *n*.
Enumeration values:
0 = Disabled
1 = Enabled
Can return the following error codes:
1 = Auto PTT and hardware PTT cannot be enabled at the same time. Disable one before enabling the other.
2 = External encoding inputs are disabled while the internal encoding (ie TAP/PET or TNPP) function is in use.

Tx On Active Level (Stored)
Configures which state is considered to be active with hardware PTT.
ATP98: Returns the current value of Tx On Active Level.
ATP98=*n* sets Tx On Active Level to *n*.
Enumeration values:
0 = Active Low
1 = Active High

Auto PTT (Stored)
Setting to enable or disable the automatic Push-To-Talk on data feature.
ATP100: Returns the current value of Auto PTT.
ATP100=*n* sets Auto PTT to *n*.
Enumeration values:
0 = Disabled
1 = Enabled
Can return the following error codes:
1 = Auto PTT and hardware PTT cannot be enabled at the same time. Disable one before enabling the other.
2 = External encoding inputs are disabled while the internal encoding (ie TAP/PET or TNPP) function is in use.

Auto PTT Timeout (Stored)
No-data timeout for the automatic PTT feature.
ATP101: Returns the current value of Auto PTT Timeout.
ATP101=*n[.m]*.: Sets the value of Auto PTT Timeout to *n* s, given that 0.000 <= *n* <= 65.535.

Active Profile (Stored)
Active protocol profile.
ATP90: Returns the current value of Active Profile.
ATP90=*n* sets Active Profile to *n*.
Enumeration values:
0 = Profile 1
1 = Profile 2
Can return the following error codes:
1 = Cannot change while encoder interface control is active

Aux Input 1 Debounce (Stored)
ATP121: Returns the current value of Aux Input 1 Debounce.
ATP121=*n[.m]*.: Sets the value of Aux Input 1 Debounce to *n* s, given that 0.5 <= *n* <= 120.0.

Aux Input 1 Mode (Stored)
Controls behaviour of the optional Aux Input 1 on the LIU. Fault Active [Low/High] will set the 'Aux Input 1 Fault' active.

ATP122: Returns the current value of Aux Input 1 Mode.
ATP122=*n* sets Aux Input 1 Mode to *n*.
Enumeration values:
0 = Unused
1 = Fault Active Low
2 = Fault Active High
Can return the following error codes:
1 = Cannot configure mode of an unsupported I/O.

Aux Input 2 Mode (Stored)
Controls behaviour of the optional Aux Input 2 on the LIU. Page Active [Low/High] will trigger a Page to be sent as configured by the [Paging Protocols -> Event] group.
ATP128: Returns the current value of Aux Input 2 Mode.
ATP128=*n* sets Aux Input 2 Mode to *n*.
Enumeration values:
0 = Unused
1 = Page Active Low
2 = Page Active High
Can return the following error codes:
1 = Cannot configure mode of an unsupported I/O.

Clock Edge (Stored)
Configures the clock edge to use when using an external data clock.
ATI152: Returns the current value of Clock Edge.
ATI152=*n* sets Clock Edge to *n*.
Enumeration values:
0 = Rising-edge
1 = Falling-edge
Can return the following error codes:
1 = Delay must be in increments of 5 us.
2 = Cannot change while transmitting
3 = Warning! External data clock must be used for 4-level protocols
4 = Unsupported with this hardware

Data Invert (Stored)
Set to true to invert data internally before modulation.
ATI153: Returns the current value of Data Invert.
ATI153=*n* sets Data Invert to *n*.
Enumeration values:
0 = Normal
1 = Inverted

External I/O Table

Name
ATR248[a]: Returns the current value of Name.
Where: a = External I/O table index (starting from 0).

Direction
ATR249[a]: Returns the current value of Direction.
Enumeration values:

0 = Input
1 = Output
Where: a = External I/O table index (starting from 0).

State
ATR250[a]: Returns the current value of State.
Enumeration values:
0 = Inactive
1 = Active
2 = Unsupported
Where: a = External I/O table index (starting from 0).

Hot Standby Menu

Role
ATM13: Returns the current value of Role.
Enumeration values:
0 = N/A
1 = Unknown
2 = Primary
3 = Secondary

State
ATM14: Returns the current value of State.
Enumeration values:
0 = N/A
1 = Active
2 = Standby
3 = Missing HW

RF Switch
ATM15: Returns the current value of RF Switch.
Enumeration values:
0 = N/A
1 = Primary
2 = Secondary

Can Go Active (HW)
ATM11: Returns the current value of Can Go Active (HW).
Enumeration values:
0 = False
1 = True

TX Fault
ATM16: Returns the current value of TX Fault.
Enumeration values:
0 = False
1 = True

PHSB Detect
ATM18: Returns the current value of PHSB Detect.
Enumeration values:

0 = Not Detected
1 = Detected

HS Support
ATM19: Returns the current value of HS Support.
Enumeration values:
0 = Not Supported
1 = Supported

Standby Mode (Stored)
ATM10: Returns the current value of Standby Mode.
ATM10=*n* sets Standby Mode to *n*.
Enumeration values:
0 = Disabled
1 = Hardware
2 = Software
Can return the following error codes:
1 = Not compatible with this hardware
2 = Requires a power-on-reset to take effect

Can Go Active (SW)
ATM12: Returns the current value of Can Go Active (SW).
ATM12=*n* sets Can Go Active (SW) to *n*.
Enumeration values:
0 = False
1 = True

Serial Ports Menu

Main DCD State
The state of the DCD input on the main serial port.
ATS92: Returns the current value of Main DCD State.

Main CTS State
The state of the CTS input on the main serial port.
ATS93: Returns the current value of Main CTS State.

Main Flow Control (Stored)
Configures flow control methods for the main serial port
ATS104: Returns the current value of Main Flow Control.
ATS104=*n* sets Main Flow Control to *n*.
Enumeration values:
0 = None
2 = Hardware (RTS / CTS)

Main DTR Mode (Stored)
Configures the behaviour of the DTR output on the main serial port.
ATS90: Returns the current value of Main DTR Mode.
ATS90=*n* sets Main DTR Mode to *n*.
Enumeration values:
0 = Always High
1 = Always Low

2 = Mirrors DCD
3 = Mirrors CTS
4 = Follows TX

Main RTS Mode (Stored)
Configures the behaviour of the RTS output on the main serial port.
ATS91: Returns the current value of Main RTS Mode.
ATS91=*n* sets Main RTS Mode to *n*.
Enumeration values:
0 = Always High
1 = Always Low
2 = Mirrors DCD
3 = Mirrors CTS
4 = Follows TX

Settings Table

Baud Rate (Stored)
The baud rate configured for this serial port.
ATS100[a]: Returns the current value of Baud Rate.
ATS100[a]=*n* sets Baud Rate to *n*.
Enumeration values:
1 = 300
2 = 600
3 = 1200
4 = 2400
5 = 4800
6 = 9600
8 = 19200
9 = 38400
10 = 57600
11 = 115200
Where: a = Settings table index (starting from 0).
Can return the following error codes:
1 = Configuration of this port is locked

Data Bits (Stored)
The number of data bits configured for this serial port.
ATS102[a]: Returns the current value of Data Bits.
ATS102[a]=*n* sets Data Bits to *n*.
Enumeration values:
0 = 7
1 = 8
Where: a = Settings table index (starting from 0).
Can return the following error codes:
1 = Configuration of this port is locked

Parity (Stored)
The parity configuration for this serial port.
ATS101[a]: Returns the current value of Parity.
ATS101[a]=*n* sets Parity to *n*.
Enumeration values:

0 = None
1 = Even
2 = Odd
Where: a = Settings table index (starting from 0).
Can return the following error codes:
1 = Configuration of this port is locked

Stop Bits (Stored)
The number of stop bits used on this serial port.
ATS103[a]: Returns the current value of Stop Bits.
ATS103[a]=*n* sets Stop Bits to *n*.
Enumeration values:
0 = 1
1 = 2
Where: a = Settings table index (starting from 0).
Can return the following error codes:
1 = Configuration of this port is locked

Reset Statistics
ATS189[a]: Runs the Reset Statistics routine.
Where: a = Settings table index (starting from 0).

Statistics Table

Name
ATS188[a,b]: Returns the current value of Name.
Where: a = Settings table index (starting from 0).
b = Statistics table index (starting from 0).

Value
Shows statistics for serial port events.
ATI20[a,b]: Returns the current value of Value.
Where: a = Settings table index (starting from 0).
b = Statistics table index (starting from 0).

LAN Interface Menu

Ethernet Menu

Local MAC Address
The factory-assigned Ethernet MAC address of the unit.
ATR46: Returns the current value of Local MAC Address.

Link Status
ATR255: Returns the current value of Link Status.
Enumeration values:
0 = Down
1 = Up

Auto Negotiation Status
ATR256: Returns the current value of Auto Negotiation Status.
Enumeration values:
0 = Not Completed
1 = Completed

Link Speed
ATR257: Returns the current value of Link Speed.
Enumeration values:
0 = 10 Mbps
1 = 100 Mbps

Link Duplex
ATR258: Returns the current value of Link Duplex.
Enumeration values:
0 = Half duplex
1 = Full duplex

Auto Negotiation (Stored)
Configure whether the Ethernet interface will automatically detect link speed and duplex.
ATR259: Returns the current value of Auto Negotiation.
ATR259=*n* sets Auto Negotiation to *n*.
Enumeration values:
0 = Force
1 = Auto-negotiate

Forced Link Speed (Stored)
Configures the speed to use when the link parameters are forced.
ATR260: Returns the current value of Forced Link Speed.
ATR260=*n* sets Forced Link Speed to *n*.
Enumeration values:
0 = 10 Mbps
1 = 100 Mbps

Forced Link Duplex (Stored)
Configures duplex when the link parameters are forced.
ATR261: Returns the current value of Forced Link Duplex.
ATR261=*n* sets Forced Link Duplex to *n*.
Enumeration values:
0 = Half duplex
1 = Full duplex

TCP/IP Menu

IP Address
A read-only string that shows the current IP address of the unit. If DHCP is enabled this will be the IP address assigned by the DHCP server. If DHCP is disabled this will be the configured static IP address.
ATI70: Returns the current value of IP Address.

Subnet Mask
ATI201: Returns the current value of Subnet Mask.

Gateway
ATI202: Returns the current value of Gateway.

Bcast Addr
ATI205: Returns the current value of Bcast Addr.

TCP Idle Timeout (Stored)
Idle time before a TCP connection times out.
ATG48: Returns the current value of TCP Idle Timeout.
ATG48=*n*.: Sets the value of TCP Idle Timeout to *n* s, given that 0 <= *n* <= 65535.

UDP Idle Timeout (Stored)
Idle time before a UDP connection times out.
ATG96: Returns the current value of UDP Idle Timeout.
ATG96=*n*.: Sets the value of UDP Idle Timeout to *n* s, given that 20 <= *n* <= 600.

DHCP Client (Identity)
Enables or disables the DHCP client of this unit. When disabled, the unit will use the configured static IP address.
ATI71: Returns the current value of DHCP Client.
ATI71=*n* sets DHCP Client to *n*.
Enumeration values:
0 = Disabled
1 = Enabled
Can return the following error codes:
1 = Power must be cycled to apply this change.
2 = Invalid hostname. Must only contain digits, letters and hyphens. Cannot start or end with hyphen.

Hostname (Stored)
The hostname of the unit.
ATI72: Returns the current value of Hostname.
ATI72=s: Sets the value of Hostname to s, given that 0 <= length(s) <= 26.
Can return the following error codes:
1 = Power must be cycled to apply this change.
2 = Invalid hostname. Must only contain digits, letters and hyphens. Cannot start or end with hyphen.

Static IP Configuration Table

1st Octet (Identity)
Get or set the 1st Octet of either IP address, subnet mask or gateway.
ATI80[a]: Returns the current value of 1st Octet.
ATI80[a]=*n*.: Sets the value of 1st Octet to *n* , given that 0 <= *n* <= 255.
Where: a = Static IP Configuration table index (starting from 0).
Can return the following error codes:
1 = Power must be cycled to apply this change.
2 = Invalid hostname. Must only contain digits, letters and hyphens. Cannot start or end with hyphen.

2nd Octet (Identity)
Get or set the 2nd Octet of either IP address, subnet mask or gateway.
ATI81[a]: Returns the current value of 2nd Octet.
ATI81[a]=*n*.: Sets the value of 2nd Octet to *n* , given that 0 <= *n* <= 255.
Where: a = Static IP Configuration table index (starting from 0).
Can return the following error codes:
1 = Power must be cycled to apply this change.
2 = Invalid hostname. Must only contain digits, letters and hyphens. Cannot start or end with hyphen.

3rd Octet (Identity)

Get or set the 3rd Octet of either IP address, subnet mask or gateway.
ATI82[a]: Returns the current value of 3rd Octet.
ATI82[a]=*n*.: Sets the value of 3rd Octet to *n* , given that 0 <= *n* <= 255.
Where: a = Static IP Configuration table index (starting from 0).
Can return the following error codes:
1 = Power must be cycled to apply this change.
2 = Invalid hostname. Must only contain digits, letters and hyphens. Cannot start or end with hyphen.

4th Octet (Identity)
Get or set the 4th Octet of either IP address, subnet mask or gateway.
ATI83[a]: Returns the current value of 4th Octet.
ATI83[a]=*n*.: Sets the value of 4th Octet to *n* , given that 0 <= *n* <= 255.
Where: a = Static IP Configuration table index (starting from 0).
Can return the following error codes:
1 = Power must be cycled to apply this change.
2 = Invalid hostname. Must only contain digits, letters and hyphens. Cannot start or end with hyphen.

SNTP Menu

Status
ATG8: Returns the current value of Status.
Enumeration values:
0 = -
1 = Disabled
2 = Error Sending Request
3 = Request Timed Out
4 = Request Pending
5 = Synchronised

Last Sync
ATG2: Returns the current value of Last Sync.

Last Query Latency
ATG5: Returns the current value of Last Query Latency.

Mode (Stored)
ATG1: Returns the current value of Mode.
ATG1=*n* sets Mode to *n*.
Enumeration values:
0 = Disabled
1 = Unicast

Server IP (Stored)
ATG3: Returns the current value of Server IP.
ATG3=s: Sets the value of Server IP to s, given that 0 <= length(s) <= 32.

Query Interval (Stored)
ATG4: Returns the current value of Query Interval.
ATG4=*n*.: Sets the value of Query Interval to *n* mins, given that 1 <= *n* <= 2880.

Request Timeout (Stored)

ATG6: Returns the current value of Request Timeout.
ATG6=*n[.m]*.: Sets the value of Request Timeout to *n* s, given that 0.000 <= *n* <= 65.535.

Send Request
ATG7: Runs the Send Request routine.

UDP Connections Table

Local Port
ATG49[a]: Returns the current value of Local Port.
Where: a = UDP Connections table index (starting from 0).

Remote IP
ATG50[a]: Returns the current value of Remote IP.
Where: a = UDP Connections table index (starting from 0).

Remote Port
ATG51[a]: Returns the current value of Remote Port.
Where: a = UDP Connections table index (starting from 0).

Diagnostics Menu

(Distributer) Estimated Life Uptime
An approximation of the total number of hours that this device has been powered up.
ATI206: Returns the current value of Estimated Life Uptime.

Total Tx Time
ATG155: Returns the current value of Total Tx Time.

Startup Reason
ATG9: Returns the current value of Startup Reason.
Enumeration values:
0 = Normal
1 = Explicitly Reset
2 = Firmware Update
3 = Exceptional
4 = Unknown

Startup Config
ATG154: Returns the current value of Startup Config.
Enumeration values:
0 = Normal
1 = Config. Reset
2 = Unknown

Approval Code
International type approval code which applies to this device.
ATI175: Returns the current value of Approval Code.
Enumeration values:
0 = ACMA
1 = FCC
2 = ETSI

EEPROM Status
Displays the EEPROM status at start-up. Blank or Invalid EEPROM could indicate a hardware fault.
ATR10: Returns the current value of EEPROM Status.
Enumeration values:
0 = Valid
1 = Blank or Invalid

Build Date
The date the firmware was compiled.
ATR9: Returns the current value of Build Date.

Firmware Version
Version information for the firmware loaded in this device.
ATI4: Returns the current value of Firmware Version.

FPGA Version
Version information for the FPGA image loaded into this device.
ATI18: Returns the current value of FPGA Version.

Bootloader Version
ATI130: Returns the current value of Bootloader Version.

(Distributer) Assertion Messages (Stored)
ATG170: Returns the current value of Assertion Messages.
ATG170=*n* sets Assertion Messages to *n*.
Enumeration values:
0 = Disabled
1 = Enabled

Software Reset
ATG10: Runs the Software Reset routine.

Time Menu

Uptime
Seconds since the radio powered up.
ATG16: Returns the current value of Uptime.

Local Time
The current local time (in seconds since Jan 1 1970).
ATG11: Returns the current value of Local Time.

Battery Status
ATG13: Returns the current value of Battery Status.
Enumeration values:
0 = Good
1 = Low Battery
2 = N/A

Local Time
The current local time.
ATG12: Returns the current value of Local Time.

Startup Date
ATG17: Returns the current value of Startup Date.

Power Off Date
ATG14: Returns the current value of Power Off Date.

UTC
The current UTC (in seconds since Jan 1 1970).
AT%63: Returns the current value of UTC.
AT%63=*n*.: Sets the value of UTC to *n* s, given that 0 <= *n* <= -1.

Time String Format (Stored)
ATG15: Returns the current value of Time String Format.
ATG15=*n* sets Time String Format to *n*.
Enumeration values:
0 = DoW MMM DD HH:MM:SS YYYY
1 = "DD/MM/YYYY"
2 = DD/MM/YYYY
3 = "DD/MM/YYYY HH:MM:SS"
4 = DD/MM/YYYY HH:MM:SS
5 = "YYYY/MM/DD HH:MM:SS"
6 = YYYY/MM/DD HH:MM:SS

Time Zone (UTC +/-) Table

Hours (Stored)
The hours portion of the time zone.
ATG18[a]: Returns the current value of Hours.
ATG18[a]=[+/-]*n*.: Sets the value of Hours to *n* hrs, given that -12 <= *n* <= 14.
Where: a = Time Zone (UTC +/-) table index (starting from 0).

Minutes (Stored)
The minutes portion of the time zone.
ATG19[a]: Returns the current value of Minutes.
ATG19[a]=*n*.: Sets the value of Minutes to *n* mins, given that 0 <= *n* <= 59.
Where: a = Time Zone (UTC +/-) table index (starting from 0).

Firmware Update Menu

Current State
ATU50: Returns the current value of Current State.
Enumeration values:
0 = Normal
1 = New Firmware Image Invalid
2 = Firmware Image Download Cancelled
3 = No Valid Firmware Snapshot
4 = Mass Storage Read/Write Failure
5 = Scheduled CRC Check Failed
6 = Image Load Failed
7 = Modem Update Successful

Startup State

ATU46: Returns the current value of Startup State.
Enumeration values:
0 = Normal
1 = New Firmware Loaded
2 = Firmware Rollback
3 = Firmware Rollback with EEPROM recovery failure
4 = Bootloader Exception
5 = Mass Storage Read/Write Failure
6 = Boot Instruction Ignored
7 = New Bootloader Loaded
8 = Bootloader Responded OK

Snapshot Progress
Displays the completion status of a firmware snapshot being created.
ATU11: Returns the current value of Snapshot Progress.

Use Schedule Information (Stored)
Use the schedule information in the CCMP-FIRMWARE-SCHEDULE packet to determine when to update to the new firmware image.
ATU47: Returns the current value of Use Schedule Information.
ATU47=*n* sets Use Schedule Information to *n*.
Enumeration values:
0 = False
1 = True

Update Firmware Now
Update the firmware to the most recent uploaded firmware image. This operation cannot be reversed and can cause configuration loss.
ATU17: Runs the Update Firmware Now routine.

Take Firmware Snapshot
Trigger a firmware snapshot to be created. The progress of the snapshot creation can be tracked under the node 'Snapshot Progress'.
ATU10: Runs the Take Firmware Snapshot routine.

Roll Back to Snapshot
'Roll Back' to the most recent firmware snapshot. This will load the firmware and configuration saved on the most recent firmware snapshot. This operation cannot be reversed.
ATU15: Runs the Roll Back to Snapshot routine.

Firmware Update Table
ATU48[a]: Returns the current value of .
Where: a = table index (starting from 0).

Available
Displays availability of the firmware image saved into this memory bank. True means an image is available, false means there is no image.
ATU20[a]: Returns the current value of Available.
Enumeration values:
0 = False
1 = True

Where: a = table index (starting from 0).

Type
ATU49[a]: Returns the current value of Type.
Enumeration values:
0 = None
1 = Firmware-New
2 = Firmware-Snapshot
3 = Bootloader-New
4 = Bootloader-Snapshot
5 = PLD-New
6 = PLD-Snapshot
7 = Modem-New
8 = Modem-Snapshot
Where: a = table index (starting from 0).

Version
The firmware version of the firmware image loaded into this memory bank.
ATU21[a]: Returns the current value of Version.
Where: a = table index (starting from 0).

Timestamp
The creation date or upload date of the firmware image loaded into this memory bank.
ATU22[a]: Returns the current value of Timestamp.
Where: a = table index (starting from 0).

(Distributer) Load Image
ATU51[a]: Runs the Load Image routine.
Where: a = table index (starting from 0).

Ethernet Statistics Menu

Ethernet Summary Statistics Table

Name
ATR251[a]: Returns the current value of Name.
Where: a = Ethernet Summary Statistics table index (starting from 0).

Value
ATR252[a]: Returns the current value of Value.
Where: a = Ethernet Summary Statistics table index (starting from 0).

Ethernet Error Statistics Table

Name
ATR253[a]: Returns the current value of Name.
Where: a = Ethernet Error Statistics table index (starting from 0).

Value
ATR254[a]: Returns the current value of Value.
Where: a = Ethernet Error Statistics table index (starting from 0).

Ethernet Data Statistics Table

Name

Value
ATR303[a]: Returns the current value of Value.
Where: a = Ethernet Data Statistics table index (starting from 0).

IP Statistics Menu

IP Statistics Table

Name
ATG34[a]: Returns the current value of Name.
Where: a = IP Statistics table index (starting from 0).

Value
ATG35[a]: Returns the current value of Value.
Where: a = IP Statistics table index (starting from 0).

Protocol Statistics Table

Protocol
ATG36[a]: Returns the current value of Protocol.
Where: a = Protocol Statistics table index (starting from 0).

Transmitted
ATG37[a]: Returns the current value of Transmitted.
Where: a = Protocol Statistics table index (starting from 0).

Re-Transmitted
ATG38[a]: Returns the current value of Re-Transmitted.
Where: a = Protocol Statistics table index (starting from 0).

Received
ATG39[a]: Returns the current value of Received.
Where: a = Protocol Statistics table index (starting from 0).

Forwarded
ATG40[a]: Returns the current value of Forwarded.
Where: a = Protocol Statistics table index (starting from 0).

Dropped
ATG41[a]: Returns the current value of Dropped.
Where: a = Protocol Statistics table index (starting from 0).

Checksum Error
ATG42[a]: Returns the current value of Checksum Error.
Where: a = Protocol Statistics table index (starting from 0).

Length Error
ATG43[a]: Returns the current value of Length Error.
Where: a = Protocol Statistics table index (starting from 0).

Memory Error
ATG44[a]: Returns the current value of Memory Error.
Where: a = Protocol Statistics table index (starting from 0).

Routing Error
ATG45[a]: Returns the current value of Routing Error.
Where: a = Protocol Statistics table index (starting from 0).

Protocol Error
ATG46[a]: Returns the current value of Protocol Error.
Where: a = Protocol Statistics table index (starting from 0).

Error
ATG47[a]: Returns the current value of Error.
Where: a = Protocol Statistics table index (starting from 0).

Fault History Menu

(Distributer) Reset Fault History
ATG179: Runs the Reset Fault History routine.

Fault History Table

Time
The time that the fault occurred.
ATG20[a]: Returns the current value of Time.
Where: a = Fault History table index (starting from 0).

Fault
The fault that occurred.
ATG21[a]: Returns the current value of Fault.
Where: a = Fault History table index (starting from 0).

Event Log Menu

Level (Stored)
The granularity of information to write to the event log.
ATS60: Returns the current value of Level.
ATS60=*n* sets Level to *n*.
Enumeration values:
0 = Faults
1 = Warnings
2 = Status
3 = Information
4 = Debugging

Clear Event Log
Clears all entries in the event log.
ATS65: Runs the Clear Event Log routine.

Filters Table

Type
ATS181[a]: Returns the current value of Type.
Where: a = Filters table index (starting from 0).

Status (Stored)

ATS182[a]: Returns the current value of Status.
ATS182[a]=*n* sets Status to *n*.
Enumeration values:
0 = Disabled
1 = Enabled
Where: a = Filters table index (starting from 0).

Transmission Log Table

Time
ATP113[a]: Returns the current value of Time.
Where: a = Transmission Log table index (starting from 0).

Event
ATP114[a]: Returns the current value of Event.
Enumeration values:
0 = -
1 = Transmit On
2 = Transmit Off
3 = Transmit Cancelled
4 = Transmit Re-key
5 = Disable Transmit
6 = Enable Transmit
Where: a = Transmission Log table index (starting from 0).

Appendix E. Sensor and Fault List Reference

Index	Sensor	Unit	Range	Default Upper Cut-off	Default Lower Cut-off
0	PA Temp	ºC	-40 to 126	75	-20
1	Driver Temp	ºC	-40 to 126	70	-20
2	PA Ambient Temp	ºC	-40 to 126	70	-20
3	Isolator Temp	ºC	-40 to 126	60	-20
4	Baseband Temp 1	ºC	-40 to 126	60	-20
5	Baseband Thermistor	ºC	-42 to 152	60	-20
6	Baseband Voltage	mV	0 to 32991	49000	46500
7	RFI-148: 12V Voltage; RFI-900: 24V Voltage	mV	0 to 14833	25930	23040
8	5V Voltage	mV	0 to 6649	5380	4810
9	3.3V Voltage	mV	0 to 4347	3510	3170
10	Baseband Current	mA	0 to 3296	2490	40
11	RFI-148: 12V Current; RFI-900: 24V Current	mA	0 to 3296	3110[12]	200
12	5V Current	mA	0 to 2197	2640[12]	800
13	3.3V Current	mA	0 to 3296	1130	670
14[13]	RFI-148: Panel Current; RFI-900: PA0 Current	mA	0 to 24951	7330	4500
15[13]	RFI-148: PA Current; RFI-900: PA90 Current	mA	0 to 24951	7330	4500
16	Driver Current	mA	0 to 2495	390	90
17[13]	Supply Current	mA	0 to 30742	16170[12]	40
18	Rear Fan Current	mA	0 to 1636	470	50
19	Front Fan Current	mA	0 to 1636	470	50

[12] If the LIU interface supply voltages are being used to supply external peripherals then these corresponding cutoffs will need to be increased by the current draw of the peripheral.

[13] These values depend upon build (RFI-148/RFI-900) and Tx Power – the values shown are for RFI-900, 250W.

20	Rear Fan Speed	RPM	0 to 32767	4440	1320
21	Front Fan Speed	RPM	0 to 32767	4440	1320
22[13]	Reverse Power	mW	0 to 86000	1730	0
23[13]	Transmit Power	mW	0 to 650000 (typical)	281000	222000
24[13]	Driver Power	mW	0 to 1714000	2640	800
25	DDS Power[14]	mW	0 to 21977	680	220
26	Isolator VSWR	10^{-3}:1	0 to 9000	2500	0

Table 32: Sensor Reference

[14] For all units with system tag 1.*d.a*, where *d* and *a* are any digit and alpha-character, respectively, this will read "Exciter Power"

Note:

- '-' indicates no change from the value in the leftmost column;
- an empty cell indicates no entry exists at this index;
- All "*Latching*", "*Default Fault Action*" and "*Default Alarm*" entries are for those parameters identified in the leftmost column.

Index	Faults					Latching	Default Fault Action	Default Alarm
	Firmware Version							
	< 2.0-A	2.0-A→2.5-C 2.6-A→2.6-C 2.11	2.5-D+ 2.6-D+ 2.8	4.0 4.1A→4.1-B	4.1-C+ 4.3			
0	High PA Temperature	-	-	-	-	Configurable	Disable Transmit	ALM7
1	High Driver Temperature	-	-	-	-	Configurable	Disable Transmit	ALM7
2	High PA Ambient Temperature	-	-	-	-	Configurable	None	ALM7
3	High Isolator Temperature	-	-	-	-	Configurable	Disable Transmit	ALM7
4	High Baseband 1 Temperature	-	-	-	-	Configurable	None	ALM7
5	High Baseband 2 Temperature	-	-	-	-	Configurable	None	ALM7
6	High 24V	-	-	High Baseband Voltage	High Baseband	Configurable	None	ALM1

	Voltage					Voltage				
7	High 12V Voltage	-	-	RFI-148	RFI-900	RFI-148	RFI-900	Configurable	None	ALM1
				High 12V Voltage	High 24V Voltage	High 12V Voltage	High 24V Voltage			
8	High 5V Voltage	-	-	-		-		Configurable	None	ALM1
9	High 3.3V Voltage	-	-	-		-		Configurable	None	ALM1
10	High 24V Current	-	-	High Baseband Current		High Baseband Current		Configurable	None	ALM1
11	High 12V Current	-	-	RFI-148	RFI-900	RFI-148	RFI-900	Configurable	None	ALM1
				High 12V Current	High 24V Current	High 12V Current	High 24V Current			
12	High 5V Current	-	-	-		-		Configurable	None	ALM1
13	High 3.3V Current	-	-	-		-		Configurable	None	ALM1
14	High Exciter Current	-	-	RFI-148	RFI-900	RFI-148	RFI-900	Configurable	Disable Transmit	ALM1
				High Panel Current	High PA0 Current	High Panel Current	High PA0 Current			
15	High PA Current	-	-	RFI-148	RFI-900	RFI-148	RFI-900	Configurable	Disable Transmit	ALM1
				High PA Current	High PA90 Current	High PA Current	High PA90 Current			
16	High Driver Current	-	-	-		-		Configurable	None	ALM1

17	High Supply Current	-	-	-	-	Configurable	None	ALM1
18	High Rear Fan Current	-	-	-	-	Configurable	None	ALM8
19	High Front Fan Current	-	-	-	-	Configurable	None	ALM8
20	High Rear Fan RPM	-	-	-	-	Configurable	None	ALM8
21	High Front Fan RPM	-	-	-	-	Configurable	None	ALM8
22	High Reverse Power	-	-	-	-	Configurable	Disable Transmit	None
23	High Transmit Power	-	-	-	-	Configurable	Disable Transmit	ALM4
24	High Driver Power	-	-	-	-	Configurable	None	None
25	High Exciter Power	-	-	High DDS Power	High DDS Power	Configurable	None	ALM4
26	High Isolator VSWR	-	-	-	-	Configurable	Disable Transmit	ALM6
27	Low PA Temperature	-	-	-	-	Configurable	None	None
28	Low Driver Temperature	-	-	-	-	Configurable	None	None
29	Low PA Ambient Temperature	-	-	-	-	Configurable	None	None

30	Low Isolator Temperature	-	-	-		-		Configurable	None	None
31	Low Baseband 1 Temperature	-	-	-		-		Configurable	None	None
32	Low Baseband 2 Temperature	-	-	-		-		Configurable	None	None
33	Low 24V Voltage	-	-	Low Baseband Voltage		Low Baseband Voltage		Configurable	None	ALM1
34	Low 12V Voltage	-	-	RFI-148	RFI-900	RFI-148	RFI-900	Configurable	None	ALM1
				Low 12V Voltage	Low 24V Voltage	Low 12V Voltage	Low 24V Voltage			
35	Low 5V Voltage	-	-	-		-		Configurable	None	ALM1
36	Low 3.3V Voltage	-	-	-		-		Configurable	None	ALM1
37	Low 24V Current	-	-	Low Baseband Current		Low Baseband Current		Configurable	None	ALM1
38	Low 12V Current	-	-	RFI-148	RFI-900	RFI-148	RFI-900	Configurable	None	ALM1
				Low 12V Current	Low 24V Current	Low 12V Current	Low 24V Current			
39	Low 5V Current	-	-	-		-		Configurable	None	ALM1
40	Low 3.3V Current	-	-	-		-		Configurable	None	ALM1
41	Low Exciter	-	-	RFI-148	RFI-900	RFI-148	RFI-900	Configurable	None	ALM1

	Current			Low Panel Current	Low PA0 Current	Low Panel Current	Low PA0 Current			
42	Low PA Current	-	-	RFI-148 Low PA Current	RFI-900 Low PA90 Current	RFI-148 Low PA Current	RFI-900 Low PA90 Current	Configurable	None	ALM1
43	Low Driver Current	-	-	-		-		Configurable	None	ALM1
44	Low Supply Current	-	-	-		-		Configurable	None	ALM1
45	Low Rear Fan Current	-	-	-		-		Configurable	None	ALM8
46	Low Front Fan Current	-	-	-		-		Configurable	None	ALM8
47	Low Rear Fan RPM	-	-	-		-		Configurable	None	ALM8
48	Low Front Fan RPM	-	-	-		-		Configurable	None	ALM8
49	Low Reverse Power	-	-	-		-		Configurable	None	None
50	Low Transmit Power	-	-	-		-		Configurable	None	ALM5
51	Low Driver Power	-	-	-		-		Configurable	None	None
52	Low Exciter Power	-	-	Low DDS Power		Low DDS Power		Configurable	None	None
53	Low Isolator	-	-	-		-		Configurable	None	None

	VSWR							
54	External Reference Fail	-	-	-	-	Configurable	Reference Switchover	ALM2
55	Software Fault	-	-	-	-	Configurable	None	None
56	Exciter Out-of-Lock	-	-	-	-	Configurable	Disable Transmit	ALM9
57	Efficiency Warning	-	-	-	-	Configurable	None	None
58	Transmit Timeout	-	-	-	-	Latch-only	Disable Transmit	None
59	Encoder Data Idle	-	-	-	-	Configurable	None	None
60	PA Current Foldback	-	-	-	-	Configurable	None	None
61	Reverse Power Foldback	-	-	-	-	Configurable	Disable Transmit	None
62	Invalid Calibration	-	-	-	-	Latch-only	Disable Transmit	None
63	Watch Dog Reset	-	-	-	-	Latch-only	None	None
64	Assertion Reset	-	-	-	-	Latch-only	None	None
65	Firmware Update Exception	-	-	-	-	Latch-only	None	None
66	Reference	Mass Storage	Mass Storage	Mass Storage	Mass Storage	Configurable	None	None

	Switchover								
67	Disable Transmission	Reference Switchover	Module	Module		Module		Latch-only	Disable transmit	None
68	Scale Transmit Power	Disable Transmission	Aux Input 1 Fault[15]	Aux Input 1 Fault		Aux Input 1 Fault				
69	Enable PA Current Foldback	Scale Transmit Power	Unused 1[15]	Unused 1		Software Compatibility[16]				
70	Enable Reverse Power Foldback	Enable PA Current Foldback	Unused 2[15]	Unused 2		Unused 1				
71		Enable Reverse Power Foldback	Unused 3[15]	Unused 3		Unused 2[17]				
72			Reference Switchover	Reference Switchover		Reference Switchover		Latch-only	None	ALM3
73			Disable Transmission	Disable Transmission		Disable Transmission		Latch-only	None	None
74			Scale Transmit Power	Scale Transmit Power		Scale Transmit Power		Latch-only	None	None
75			Enable PA Current Foldback	**RFI-148**	**RFI-900**	**RFI-148**	**RFI-900**	Latch-only	None	None
				Enable PA	Enable PA0	Enable PA	Enable PA0			

[15] For 2.5-D *only*, these will appear as “External 1”, “Spare 1”, “Spare 2”, “Spare 3”

[16] The Default Fault Action for this is to Disable Transmit.

[17] For Analogue Paging builds and where this feature has been enabled, this will be “Audio Calibration Failure” (refer to 8.5), with no fault action or latching mechanism by default.

				Current Foldback	Current Foldback	Current Foldback	Current Foldback			
76			Enable Reverse Power Foldback	Enable Reverse Power Foldback	Enable PA90 Current Foldback	Enable Reverse Power Foldback	Enable PA90 Current Foldback	Latch-only	None	None
77					Enable Reverse Power Foldback		Enable Reverse Power Foldback	Latch-only	None	None

Table 33: Fault Reference

Appendix F. Product Identification Table

Table 34 shows the Paging Transmitter product identification. The green shaded items are the available configurations. This table should be used when ordering a Paging Transmitter.

FREQUENCY BAND		MAXIMUM TX POWER		POWER SUPPLY		INTEGRATED ISOLATOR		DIGITAL		APPROVAL		FREQUENCY		ADDITIONAL FEATURES	
148	VHF	250	250 W	P	110/240 VAC	C	Fitted	D	POCSAG/ FLEX	A	Australia and US	01	148.5 - 150.5 MHz	H	Hot standby operation
		100	100 W	E	24 VDC					E	Europe	02	150.5 - 153.5 MHz	A	Analog Mode
				T	-48 VDC							0102	148.5 - 153.5 MHz	UN	Ultra-Narrow Band
												03	153.5 - 156.5 MHz		
												04	156.5 - 159.5 MHz		
												0304	153.5 - 159.5 MHz		
												05	159.5 - 162.5 MHz		
												06	162.5 - 165.5 MHz		
												07	165.5 - 168.5 MHz		
												08	167 - 170 MHz		
												09	170 - 173 MHz		
												10	171 - 174 MHz		
												11	169 – 171.4 MHz		
												12	169 - 172 MHz		
												13	151-154 MHz		
148	VHF	110	110 W	P	110/240 VAC	C	Fitted	D	POCSAG/ FLEX	C	Canada	03	153.5 - 156.5 MHz		
												04	156.5 - 159.5 MHz		
												0304	153.5 - 159.5 MHz		
900	UHF	250	250 W	P	110/240 VAC	C	Fitted	D	POCSAG/ FLEX	A	US	01	929 – 932 MHz	H	Hot standby operation
		100	100 W	E	48 VDC										

Table 34: Paging Transmitter product identification table

For example, the product code for a 250 W Paging Transmitter supplied from -48 VDC, with an integrated isolator and released for Europe is RFI-148 250TCDE.

Note that “Additional Features” are not mutually exclusive. That is, a “RFI-148 250PCDAHAUN” unit will support Hot-Standby, Analogue and Ultra-Narrow band operation.

Appendix G. Troubleshooting

This section outlines steps that can be taken in response to issues with the paging transmitter.

G.1 Configuring Sensor Cutoffs

Changing the paging transmitter transmit power should also include changing the sensor cutoffs. The factory default settings for the paging transmitter is for 20 W transmit power, including reasonable sensor cutoffs for this transmit power. If the transmit power is increased, then the sensor cutoffs also need to be similarly increased. Please contact STI Engineering for accessing Cruise Control configuration files with recommended sensor cutoffs for common transmit power settings.

If the LIU interface supply voltages are being used to supply external peripherals then the corresponding upper current cutoff will need to be increased by the current draw of the peripheral.

G.2 Fault LED Active

The paging transmitter has several different indicators that a fault is currently active. The easiest method to determine fault status is to observe the front panel of the unit. If the red fault LED is on then the transmitter has an active fault. The fault status can also be interrogated using Cruise Control.

To determine the type of fault that is active, connect to the paging transmitter using Cruise Control (for information on using Cruise Control see section 3.2). The front serial port of the paging transmitter has a configuration locked to 19200 8N1 (19200 baud, 8 data bits, even parity, and 1 stop bit). Once connected with Cruise Control, navigate to the Faults group and Cruise Control will display a view similar to the one shown in Figure 20 below.

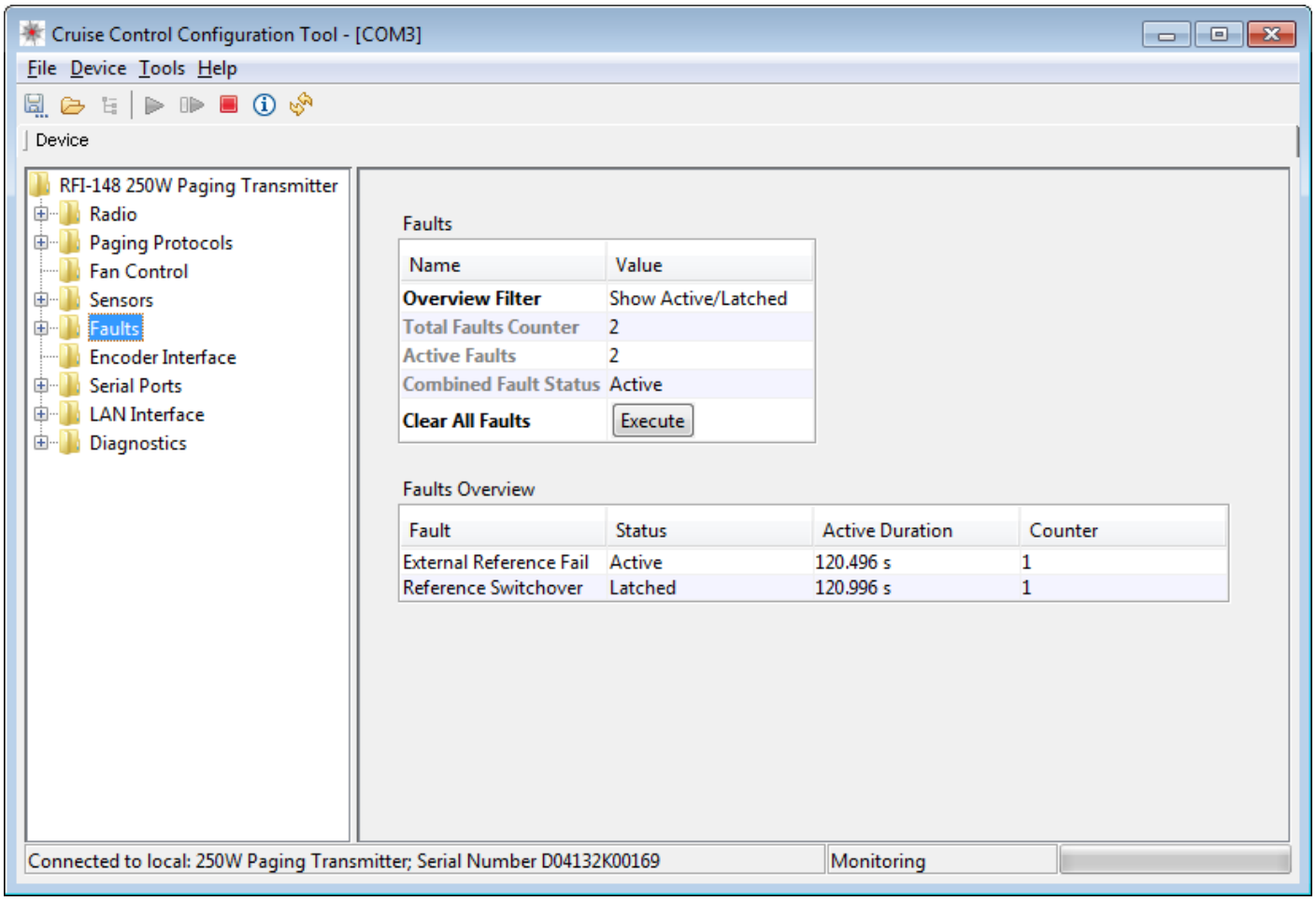

Figure 20: Cruise Control Faults Overview

In the case of Figure 20, the external reference fail and reference switchover faults are active. See the headings below to diagnose some common active faults.

G.3 External Reference Fail

The external reference fail fault goes active when the transmitter is configured to use the external reference, but it cannot be locked to.

If an external reference is not in use, change the reference mode to internal and then run the clear all faults routine to clear the fault LED.

If an external reference is required:

- Ensure the external reference is plugged in.
- Ensure the external reference is within specification (see Table 16).
- Ensure the external reference frequency is configured correctly.

G.4 High Transmit Power

A high transmit power fault could indicate a hardware issue, however it is usually due to incorrect configuration. The high transmit power fault will go active when the sensed transmit power exceeds the transmit power upper cutoff. A high transmit power fault is usually seen in tandem with high PA current and foldback faults.

If the transmit power setting has been increased without changing the sensor cutoff values then this is likely the cause of the fault. See G.1 for troubleshooting sensor cutoffs. For information on sensor cutoffs see section Appendix E.

G.5 High VSWR

The high VSWR fault goes active when there is too much power being reflected into the RF out connection. When diagnosing a VSWR fault ensure the guidelines on human exposure to RF emissions are followed in section 2.3.1. To diagnose a high VSWR fault:

- Ensure an antenna is attached to the RF out port.
- Ensure the paging transmitter is configured for the correct operating frequency and the correct channel number is selected.
- Ensure the antenna is tuned to the operating frequency.
    - Also ensure any in-line devices (such as a cavity filter) are tuned to the correct frequency.
- Ensure there are no open circuits in the cable run from the paging transmitter to the antenna.
- If possible, visually inspect the antenna for damage.

G.6 Disable Transmit

The disable transmit fault is a fault action automatically performed by the firmware due to other faults being active. The disable transmit fault action is caused by critical faults in the paging transmitter to stop hardware damage or transmitting off frequency. A list of faults that will cause disable transmit and how to troubleshoot them follows.

G.6.1 High PA or Driver Temperature

The temperature on the PA module has exceeded the sensor cutoff values (80 °C by default). To troubleshoot high PA temperature:

- Ensure the fans are configured to turn on at a reasonable temperature. The factory default is recommended and has the fans turn on at 40 °C.
- Check the ambient air temperature where the paging transmitter is installed. When transmitting at 250 W with an ambient temperature of 60 °C, the paging transmitter is expected to reach 80 °C. Ensure proper air circulation and/or air conditioning in the area the paging transmitter is installed.

- Ensure the fans are working. Check for blockages of the fan intake and exhaust.

G.6.2 High Reverse Power or Reverse Power Foldback

A high reverse power fault indicates a hardware failure of the circulator inside the paging transmitter. Failure of the circulator can cause RF spectrum splatter, so transmit is disabled. Return the unit to STI Engineering for repair.

G.6.3 Exciter Out-of-Lock

An exciter out-of-lock fault indicates that the channel frequencies can no longer be generated. There are two possible causes of an exciter out-of-lock:

- If an external reference is in use: the external reference frequency has drifted too far from the configured reference frequency. Check the accuracy of the external reference.
- A critical hardware failure in the paging transmitter. Return the unit to STI Engineering for repair.

G.6.4 Transmit Timeout

The transmit timeout fault goes active when the unit has been transmitting for longer than the transmit timeout duration. The transmit timeout fault can either be disabled, or the timeout can be increased.

G.7 Unit Won't Transmit

There could be several causes for the paging transmitting not transmitting, each is explained below.

G.7.1 PTT Override

The paging transmitter PTT override can disable the transmitter from transmitting. The status of PTT override is displayed in the PTT Override Status field under the radio settings:

- ***Enabled:*** Transmitting is enabled.
- ***DISABLED:User:*** Transmitting is disabled because the user-configurable option PTT Override is set to disable transmit. To enable transmit again, set PTT override to enable transmit.
- ***DISABLED:Fault:*** Transmitting is disabled because the disable transmit fault action is active. See section G.6 for troubleshooting a disable transmit fault action.
- ***DISABLED:Listening:*** Transmitting is disabled because the isolator mode is set for listening. To enable transmitting again, the isolator mode must be set for transmitting.
- ***DISABLED:Loading Config:*** Transmitting is disabled while Cruise Control is loading a configuration file.

- ***DISABLED: External Reference:*** Transmitting is disabled because Radio → Reference → Reference Mode is set to "External Only" but the external reference cannot be locked to. Either change the reference mode to allow use of the internal reference or restore the external reference source to within specification. In either case, the PTT override will clear itself automatically.

G.7.2 Hardware or Auto PTT

When troubleshooting hardware or auto PTT, ensure the following:

- The paging transmitter can transmit with the "Transmit On" routine in Cruise Control.
- Hardware PTT or auto PTT is enabled.

For hardware PTT:

- The correct hardware PTT active level is configured, active low or active high.
- Toggling the hardware PTT state is reflected in the "Ext I/O" table in Cruise Control in the Encoder Interface group. If this does not work, it indicates a cabling issue with the hardware PTT input.

For auto PTT:

- Toggling the L-bit state is reflected in the "Ext I/O" table in Cruise Control in the Encoder Interface group. If this does not work, it indicates a cabling issue with the L-bit input.

G.7.3 Profile Definition

If the RFI-900 reports that it is transmitting (*Radio → Power → Transmitter Status*), yet LIU L-Bit activity does not produce modulated data, ensure that the selected modulation profile (*Encoder Interface → Active Profile*) is not configured to use an external data clock (via the LIU) unless you are providing one (*Paging Protocols → Profiles → Ext. Data Clock*).

G.8 Unit Transmits at Low Power

If the unit is transmitting at low power as indicated by the front panel power gauge or transmit power sensor there could be several causes. Ensure:

- The required transmit power is configured.
- There are no faults active. A unit configured to transmit at a high power level needs similarly higher sensor cutoffs, see Appendix D.

Otherwise, low transmit power could indicate a hardware failure. If troubleshooting fails, return the unit to STI Engineering for repair.

Appendix H. Glossary

BNC	Bayonet Neill-Concelman (Connector)
CTS	Clear To Send
DCD	Data Carrier Detect
DCE	Data Communications Equipment (radio modem)
DTE	Data Terminal Equipment (computer device)
DTR	Data Terminal Ready
EIRP	Effective Isotropic Radiated Power
GUI	Graphical User Interface
PA	Power Amplifier
POCSAG	Post Office Code Standardisation Advisory Group
PET	Motorola Page Entry (now TAP)
PTT	Push-To-Talk
RF	Radio Frequency
RSSI	Received Signal Strength Indicator
RTS	Request To Send
Rx	Received
SNMP	Simple Network Management Protocol
SNTP	Simple Network Time Protocol
TAP	Telelocator Alphanumeric Protocol (formerly PET)
TNC	Threaded Neill-Concelman (Connector)
TNPP	Telelocator Network Paging Protocol
Tx	Transmitted
UTC	Coordinated Universal Time
VHF	Very High Frequency
VSWR	Voltage Standing Wave Ratio

Table 35: Glossary

Index

Appendix
- Controller Configurations
  - Glenayre C2000 Controller / FLEX Mode 64, 65
  - Glenayre C2000 Controller / POCSAG Mode 65
  - Motorola NIU Controller / FLEX Mode 64
  - Zetron Model 66 Controller / POCSAG Mode 66

Configuration 15
- Auto PTT 27
- Carrier Offset 32
- Channel Selection 25
- Combined Fault 35
- Default Reference 28
- Delay Correction 29
- Encoder Frequency Control 22
- Encoder Hardware PTT 22
- Encoder Protocol Control 22
- External Reference 28
- Isolator Mode 29
- Minimum Fault Duration 35
- PTT System Override 27
- PTT Turn Off Delay 27
- Sensor Cut-off 33
- Serial Ports 24
- SNTP 37
- Transmit Power 25
- Transmit Timeout 27

Diagnostics and Troubleshooting
- Serial Port Statistics 24

Fault Reference 116

Glossary 133

Installation
- Product 9

Introduction 7

Operation 24
- Serial Ports 24

Sensor Reference 116

Technical Specifications 55
- Paging Transmitter 55
- Serial Ports 59