InterLab®

Final Report on

Cinterion Wireless Module PH8-P
HW: Release 2, B2
SW: Revision 01.370

Report Reference: MDE_CINTE_1107_FCCc

acc. Title 47 CFR chapter I part 24 subpart E

Date: September 22, 2011

Test Laboratory:
7Layers AG
Borsigstr. 11
40880 Ratingen
Germany

DAkkS
Deutsche
Akkreditierungsstelle
D-PL-12140-01-01

Note:
The following test results relate only to the devices specified in this document. This report shall not be reproduced in parts without the written approval of the test laboratory.

7Layers AG
Borsigstrasse 11
40880 Ratingen, Germany
Phone: +49 (0) 2102 749 0
Fax: +49 (0) 2102 749 350
www.7Layers.com

Aufsichtsratsvorsitzender
Chairman of the Supervisory Board:
Markus Becker
Vorstand Board:
Dr. H.-J. Meckelburg

Registergericht registered in:
Düsseldorf, HRB 44096
USt-IdNr VAT No.:
DE 203159652
TAX No. 147/5869/0385

1 Administrative Data

1.1 Project Data

Project Responsible:	Mr. René Houx
Date Of Test Report:	2011/09/22
Date of first test:	2011/08/15
Date of last test:	2011/08/20

1.2 Applicant Data

Company Name: Cinterion Wireless Modules GmbH

Street:	Siemensdamm 50
City:	13629 Berlin
Country:	Germany

Contact Person: Mr. Thorsten Liebig

Function:	Manager Approval
Phone:	+49 (30) 31102-8241
E-Mail:	thorsten.liebig@cinterion.com

1.3 Test Laboratory Data

The following list shows all places and laboratories involved for test result generation:

7 layers DE

Company Name :	7 layers AG
Street :	Borsigstrasse 11
City :	40880 Ratingen
Country :	Germany
Contact Person :	Mr. Michael Albert
Phone :	+49 2102 749 201
Fax :	+49 2102 749 444
E Mail :	michael.albert@7Layers.de

Laboratory Details

Lab ID	*Identification*	*Responsible*	*Accreditation Info*
Lab 1	Radiated Emissions	Mr. Robert Machulec Mr. Andreas Petz	DAkkS-Registration no. D-PL-12140-01-01
Lab 2	Radio Lab	Mr. Robert Machulec Mr. Andreas Petz	DAkkS-Registration no. D-PL-12140-01-01

1.4 Signature of the Testing Responsible

Machulec

Robert Machulec
responsible for tests performed in: Lab 1, Lab 2

1.5 Signature of the Accreditation Responsible

[B RETKA]

Accreditation scope responsible person
responsible for Lab 1, Lab 2

2 Test Object Data

2.1 General OUT Description

The following section lists all OUTs (Object's Under Test) involved during testing.

OUT: PH8-P

Type / Model / Family:	Cinterion Wireless Module PH8-P HW: Release 2, B2 SW: Revision 01.370
Product Category:	Module

Parameter List:

Parameter name	*Value*
Parameter for Scope FCC_v2:	
Antenna gain 1900 band	not specified (dBi)
Antenna gain 850 band	not specified (dBi)
Antenna gain GPS	not specified (dBi)
DC Power Supply	4.2 (V)
highest channel	251 (848.8MHz) for GSM850, 810 (1909.8MHz) for GSM1900, 4233 (846.6MHz) for FDD5, 9538 (1907.6MHz) for FDD2
lowest channel	128 (824.2MHz) for GSM850, 512 (1850.2MHz) for GSM1900, 4132 (826.4MHz) for FDD5, 9262 (1852.4MHz) for FDD2
mid channel	190 (836.6MHz) for GSM850, 661 (1880.0MHz) for GSM1900, 4183 (836.6MHz) for FDD5, 9400 (1880MHz) for FDD2

2.2 Detailed Description of OUT Samples

Sample : b01

OUT Identifier	PH8-P		
Sample Description	sample #02		
Serial No.	IMEI: 004401080640028		
HW Status	Release 2, B2		
SW Status	Revision 01.370		
Date of Receipt	2011/08/05		
Low Voltage	3.3 V	*Low Temp.*	-10 °C
High Voltage	4.2 V	*High Temp.*	+55 °C
Nominal Voltage	4.2 V	*Normal Temp.*	+22 °C

2.3 OUT Features

Features for OUT: PH8-P

Designation	*Description*	*Allowed Values*	*Supported Value(s)*
Features for scope: FCC_v2			
AC	The OUT is powered by or connected to AC Mains		
DC	The OUT is powered by or connected to DC Mains		
EDGE850	EUT supports EDGE in the band 824 MHz - 849 MHz		
EDGE1900	EUT supports EDGE in the band 1850 MHz - 1910 MHz		
FDD2	EUT supports UMTS FDD2 in the band 1850 MHz - 1910 MHz		
FDD5	EUT supports UMTS FDD5 in the band 824 MHz - 849 MHz		
GSM850	EUT supports GSM850 band 824MHz - 849MHz		
HSDPA-FDD2	EUT supports UMTS FDD2 HSDPA in the band 1850 MHz - 1910 MHz		
HSDPA-FDD5	EUT supports UMTS FDD5 HSDPA in the band 824 MHz - 849 MHz		
HSUPA-FDD2	EUT supports UMTS FDD2 HSUPA in the band 1850 MHz - 1910 MHz		
HSUPA-FDD5	EUT supports UMTS FDD5 HSUPA in the band 824 MHz - 849 MHz		
PantC	permanent fixed antenna connector, which may be built-in, designed as an indispensable part of the equipment		
PCS1900	EUT supports PCS1900 band 1850MHz - 1910MHz		

2.4 Auxiliary Equipment

AE No.	*Type Designation*	*Serial No.*	*HW Status*	*SW Status*	*Description*
AE 09	-	-	-	-	Direct RF coupler to SMA
AE 02	-	-	-	-	Flex cable
AE Ant1	-	-	-	-	GSM/UMTS antenna
AE Ant2	-	-	-	-	UMTS antenna
AE Ant3	ANN-MS-0-005 M827B	601657	-	-	GPS antenna
AE 01	DSB75_B1.1_0152	-	-	-	Evaluation board

2.5 Setups used for Testing

For each setup a relation is given to determine if and which samples and auxiliary equipment is used.
The left side list all OUT samples and the right side lists all auxiliary equipment for the given setup.

Setup No.	*List of OUT samples*		*List of auxiliary equipment*	
	Sample No.	*Sample Description*	*AE No.*	*AE Description*
B01_direct	**(used for measurement using antenna port at the module)**			
	Sample: b01	sample #02	AE 09	Direct RF coupler to SMA
			AE 02	Flex cable
			AE 01	Evaluation board
B01_rad	**(used for radiated measurement using external antennas)**			
	Sample: b01	sample #02	AE 02	Flex cable
			AE Ant1	GSM/UMTS antenna
			AE Ant2	UMTS antenna
			AE Ant3	GPS antenna
			AE 01	Evaluation board
B01_RF1	**(used for measurement at external RF connector RF1)**			
	Sample: b01	sample #02	AE 02	Flex cable
			AE 01	Evaluation board

3 Results

3.1 General

Documentation of tested devices:	Available at the test laboratory.
Interpretation of the test results:	The results of the inspection are described on the following pages, where 'Conformity' or 'Passed' means that the certification criteria were verified and that the tested device is conform to the applied standard. In cases where 'Declaration' is printed, the required documents are available in the manufacturers product documentation. In cases where 'not applicable' is printed, the test case requirements are not relevant to the specific equipment implementation.

3.2 List of the Applicable Body

(Body for Scope: FCC_v2)

Designation	*Description*
FCC47CFRChIPART24PERSONAL COMMUNICATIONS SERVICES	Part 24, Subpart E - Broadband PCS

3.3 List of Test Specification

Test Specification:	**FCC part 2 and 24**
Version	10-1-10 Edition
Title:	PART 2 - GENERAL RULES AND REGULATIONS PART 24 - PERSONAL COMMUNICATIONS SERVICES

3.4 Summary

Test Case Identifier / Name Test (condition)	*Result*	*Date of Test*	*Lab Ref.*	*Setup*
24.1 RF Power Output §2.1046, §24.232				
24.1; Frequency Band = 1900, Mode = EDGE, Channel = 512, Frequency = 1850.2MHz, Method = conducted	Passed	2011/08/19	Lab 2	B01_direct
24.1; Frequency Band = 1900, Mode = EDGE, Channel = 661, Frequency = 1880.0MHz, Method = conducted	Passed	2011/08/19	Lab 2	B01_direct
24.1; Frequency Band = 1900, Mode = EDGE, Channel = 810, Frequency = 1909.8MHz, Method = conducted	Passed	2011/08/20	Lab 2	B01_direct
24.1; Frequency Band = 1900, Mode = GSM, Channel = 512, Frequency = 1850.2MHz, Method = conducted	Passed	2011/08/19	Lab 2	B01_direct
24.1; Frequency Band = 1900, Mode = GSM, Channel = 661, Frequency = 1880.0MHz, Method = conducted	Passed	2011/08/19	Lab 2	B01_direct
24.1; Frequency Band = 1900, Mode = GSM, Channel = 810, Frequency = 1909.8MHz, Method = conducted	Passed	2011/08/19	Lab 2	B01_direct
24.1; Frequency Band = FDD2, Mode = HSDPA_subtest_1, Channel = 9262, Frequency = 1852.4MHz, Method = conducted	Passed	2011/08/20	Lab 2	B01_direct
24.1; Frequency Band = FDD2, Mode = HSDPA_subtest_1, Channel = 9400, Frequency = 1880MHz, Method = conducted	Passed	2011/08/20	Lab 2	B01_direct
24.1; Frequency Band = FDD2, Mode = HSDPA_subtest_1, Channel = 9538, Frequency = 1907.6MHz, Method = conducted	Passed	2011/08/20	Lab 2	B01_direct
24.1; Frequency Band = FDD2, Mode = HSDPA_subtest_2, Channel = 9262, Frequency = 1852.4MHz, Method = conducted	Passed	2011/08/20	Lab 2	B01_direct
24.1; Frequency Band = FDD2, Mode = HSDPA_subtest_2, Channel = 9400, Frequency = 1880MHz, Method = conducted	Passed	2011/08/20	Lab 2	B01_direct
24.1; Frequency Band = FDD2, Mode = HSDPA_subtest_2, Channel = 9538, Frequency = 1907.6MHz, Method = conducted	Passed	2011/08/20	Lab 2	B01_direct
24.1; Frequency Band = FDD2, Mode = HSDPA_subtest_3, Channel = 9262, Frequency = 1852.4MHz, Method = conducted	Passed	2011/08/20	Lab 2	B01_direct
24.1; Frequency Band = FDD2, Mode = HSDPA_subtest_3, Channel = 9400, Frequency = 1880MHz, Method = conducted	Passed	2011/08/20	Lab 2	B01_direct
24.1; Frequency Band = FDD2, Mode = HSDPA_subtest_3, Channel = 9538, Frequency = 1907.6MHz, Method = conducted	Passed	2011/08/20	Lab 2	B01_direct
24.1; Frequency Band = FDD2, Mode = HSDPA_subtest_4, Channel = 9262, Frequency = 1852.4MHz, Method = conducted	Passed	2011/08/20	Lab 2	B01_direct
24.1; Frequency Band = FDD2, Mode = HSDPA_subtest_4, Channel = 9400, Frequency = 1880MHz, Method = conducted	Passed	2011/08/20	Lab 2	B01_direct
24.1; Frequency Band = FDD2, Mode = HSDPA_subtest_4, Channel = 9538, Frequency = 1907.6MHz, Method = conducted	Passed	2011/08/20	Lab 2	B01_direct
24.1; Frequency Band = FDD2, Mode = HSUPA_subtest_1, Channel = 9262, Frequency = 1852.4MHz, Method = conducted	Passed	2011/08/20	Lab 2	B01_direct
24.1; Frequency Band = FDD2, Mode = HSUPA_subtest_1, Channel = 9400, Frequency = 1880MHz, Method = conducted	Passed	2011/08/20	Lab 2	B01_direct

Test Case Identifier / Name *Test (condition)*	*Result*	*Date of Test*	*Lab Ref.*	*Setup*
24.1 RF Power Output §2.1046, §24.232				
24.1; Frequency Band = FDD2, Mode = HSUPA_subtest_1, Channel = 9538, Frequency = 1907.6MHz, Method = conducted	Passed	2011/08/20	Lab 2	B01_direct
24.1; Frequency Band = FDD2, Mode = HSUPA_subtest_2, Channel = 9262, Frequency = 1852.4MHz, Method = conducted	Passed	2011/08/20	Lab 2	B01_direct
24.1; Frequency Band = FDD2, Mode = HSUPA_subtest_2, Channel = 9400, Frequency = 1880MHz, Method = conducted	Passed	2011/08/20	Lab 2	B01_direct
24.1; Frequency Band = FDD2, Mode = HSUPA_subtest_2, Channel = 9538, Frequency = 1907.6MHz, Method = conducted	Passed	2011/08/20	Lab 2	B01_direct
24.1; Frequency Band = FDD2, Mode = HSUPA_subtest_3, Channel = 9262, Frequency = 1852.4MHz, Method = conducted	Passed	2011/08/20	Lab 2	B01_direct
24.1; Frequency Band = FDD2, Mode = HSUPA_subtest_3, Channel = 9400, Frequency = 1880MHz, Method = conducted	Passed	2011/08/20	Lab 2	B01_direct
24.1; Frequency Band = FDD2, Mode = HSUPA_subtest_3, Channel = 9538, Frequency = 1907.6MHz, Method = conducted	Passed	2011/08/20	Lab 2	B01_direct
24.1; Frequency Band = FDD2, Mode = HSUPA_subtest_4, Channel = 9262, Frequency = 1852.4MHz, Method = conducted	Passed	2011/08/20	Lab 2	B01_direct
24.1; Frequency Band = FDD2, Mode = HSUPA_subtest_4, Channel = 9400, Frequency = 1880MHz, Method = conducted	Passed	2011/08/20	Lab 2	B01_direct
24.1; Frequency Band = FDD2, Mode = HSUPA_subtest_4, Channel = 9538, Frequency = 1907.6MHz, Method = conducted	Passed	2011/08/20	Lab 2	B01_direct
24.1; Frequency Band = FDD2, Mode = HSUPA_subtest_5, Channel = 9262, Frequency = 1852.4MHz, Method = conducted	Passed	2011/08/20	Lab 2	B01_direct
24.1; Frequency Band = FDD2, Mode = HSUPA_subtest_5, Channel = 9400, Frequency = 1880MHz, Method = conducted	Passed	2011/08/20	Lab 2	B01_direct
24.1; Frequency Band = FDD2, Mode = HSUPA_subtest_5, Channel = 9538, Frequency = 1907.6MHz, Method = conducted	Passed	2011/08/20	Lab 2	B01_direct
24.1; Frequency Band = FDD2, Mode = W-CDMA, Channel = 9262, Frequency = 1852.4MHz, Method = conducted	Passed	2011/08/20	Lab 2	B01_direct
24.1; Frequency Band = FDD2, Mode = W-CDMA, Channel = 9400, Frequency = 1880MHz, Method = conducted	Passed	2011/08/20	Lab 2	B01_direct
24.1; Frequency Band = FDD2, Mode = W-CDMA, Channel = 9538, Frequency = 1907.6MHz, Method = conducted	Passed	2011/08/20	Lab 2	B01_direct
24.2 Frequency stability §2.1055, §24.235				
24.2; Frequency Band = 1900, Mode = EDGE, Channel = 661, Frequency = 1880.0MHz	Passed	2011/08/19	Lab 2	B01_RF1
24.2; Frequency Band = 1900, Mode = GSM, Channel = 661, Frequency = 1880.0MHz	Passed	2011/08/19	Lab 2	B01_RF1
24.2; Frequency Band = FDD2, Mode = HSDPA, Channel = 9400, Frequency = 1880MHz	Passed	2011/08/19	Lab 2	B01_RF1
24.2; Frequency Band = FDD2, Mode = HSUPA, Channel = 9400, Frequency = 1880MHz	Passed	2011/08/19	Lab 2	B01_RF1
24.2; Frequency Band = FDD2, Mode = W-CDMA, Channel = 9400, Frequency = 1880MHz	Passed	2011/08/19	Lab 2	B01_RF1

Test Case Identifier / Name *Test (condition)*	*Result*	*Date of Test*	*Lab Ref.*	*Setup*
24.3 Spurious emissions at antenna terminals §2.1051, §24.238				
24.3; Frequency Band = 1900, Mode = EDGE, Channel = 512, Frequency = 1850.2MHz	Passed	2011/08/19	Lab 2	B01_direct
24.3; Frequency Band = 1900, Mode = EDGE, Channel = 661, Frequency = 1880.0MHz	Passed	2011/08/19	Lab 2	B01_direct
24.3; Frequency Band = 1900, Mode = EDGE, Channel = 810, Frequency = 1909.8MHz	Passed	2011/08/20	Lab 2	B01_direct
24.3; Frequency Band = 1900, Mode = GSM, Channel = 512, Frequency = 1850.2MHz	Passed	2011/08/19	Lab 2	B01_direct
24.3; Frequency Band = 1900, Mode = GSM, Channel = 661, Frequency = 1880.0MHz	Passed	2011/08/19	Lab 2	B01_direct
24.3; Frequency Band = 1900, Mode = GSM, Channel = 810, Frequency = 1909.8MHz	Passed	2011/08/19	Lab 2	B01_direct
24.3; Frequency Band = FDD2, Mode = HSDPA, Channel = 9262, Frequency = 1852.4MHz	Passed	2011/08/20	Lab 2	B01_direct
24.3; Frequency Band = FDD2, Mode = HSDPA, Channel = 9400, Frequency = 1880MHz	Passed	2011/08/20	Lab 2	B01_direct
24.3; Frequency Band = FDD2, Mode = HSDPA, Channel = 9538, Frequency = 1907.6MHz	Passed	2011/08/20	Lab 2	B01_direct
24.3; Frequency Band = FDD2, Mode = HSUPA, Channel = 9262, Frequency = 1852.4MHz	Passed	2011/08/20	Lab 2	B01_direct
24.3; Frequency Band = FDD2, Mode = HSUPA, Channel = 9400, Frequency = 1880MHz	Passed	2011/08/20	Lab 2	B01_direct
24.3; Frequency Band = FDD2, Mode = HSUPA, Channel = 9538, Frequency = 1907.6MHz	Passed	2011/08/20	Lab 2	B01_direct
24.3; Frequency Band = FDD2, Mode = W-CDMA, Channel = 9262, Frequency = 1852.4MHz	Passed	2011/08/20	Lab 2	B01_direct
24.3; Frequency Band = FDD2, Mode = W-CDMA, Channel = 9400, Frequency = 1880MHz	Passed	2011/08/20	Lab 2	B01_direct
24.3; Frequency Band = FDD2, Mode = W-CDMA, Channel = 9538, Frequency = 1907.6MHz	Passed	2011/08/20	Lab 2	B01_direct

Test Case Identifier / Name *Test (condition)*	*Result*	*Date of Test*	*Lab Ref.*	*Setup*
24.4 Field strength of spurious radiation §2.1053, §24.238				
24.4; Frequency Band = 1900, Mode = EDGE, Channel = 512, Frequency = 1850.2MHz	Passed	2011/08/16	Lab 1	B01_rad
24.4; Frequency Band = 1900, Mode = EDGE, Channel = 661, Frequency = 1880.0MHz	Passed	2011/08/16	Lab 1	B01_rad
24.4; Frequency Band = 1900, Mode = EDGE, Channel = 810, Frequency = 1909.8MHz	Passed	2011/08/16	Lab 1	B01_rad
24.4; Frequency Band = 1900, Mode = GSM, Channel = 512, Frequency = 1850.2MHz	Passed	2011/08/16	Lab 1	B01_rad
24.4; Frequency Band = 1900, Mode = GSM, Channel = 661, Frequency = 1880.0MHz	Passed	2011/08/16	Lab 1	B01_rad
24.4; Frequency Band = 1900, Mode = GSM, Channel = 810, Frequency = 1909.8MHz	Passed	2011/08/16	Lab 1	B01_rad
24.4; Frequency Band = FDD2, Mode = HSDPA, Channel = 9262, Frequency = 1852.4MHz	Passed	2011/08/16	Lab 1	B01_rad
24.4; Frequency Band = FDD2, Mode = HSDPA, Channel = 9400, Frequency = 1880MHz	Passed	2011/08/16	Lab 1	B01_rad
24.4; Frequency Band = FDD2, Mode = HSDPA, Channel = 9538, Frequency = 1907.6MHz	Passed	2011/08/16	Lab 1	B01_rad
24.4; Frequency Band = FDD2, Mode = HSUPA, Channel = 9262, Frequency = 1852.4MHz	Passed	2011/08/15	Lab 1	B01_rad
24.4; Frequency Band = FDD2, Mode = HSUPA, Channel = 9400, Frequency = 1880MHz	Passed	2011/08/15	Lab 1	B01_rad
24.4; Frequency Band = FDD2, Mode = HSUPA, Channel = 9538, Frequency = 1907.6MHz	Passed	2011/08/15	Lab 1	B01_rad
24.4; Frequency Band = FDD2, Mode = W-CDMA, Channel = 9262, Frequency = 1852.4MHz	Passed	2011/08/16	Lab 1	B01_rad
24.4; Frequency Band = FDD2, Mode = W-CDMA, Channel = 9400, Frequency = 1880MHz	Passed	2011/08/16	Lab 1	B01_rad
24.4; Frequency Band = FDD2, Mode = W-CDMA, Channel = 9538, Frequency = 1907.6MHz	Passed	2011/08/16	Lab 1	B01_rad

Test Case Identifier / Name *Test (condition)*	*Result*	*Date of Test*	*Lab Ref.*	*Setup*
24.5 Emission and Occupied Bandwidth §2.1049, §24.238				
24.5; Frequency Band = 1900, Mode = EDGE, Channel = 512, Frequency = 1850.2MHz	Passed	2011/08/19	Lab 2	B01_direct
24.5; Frequency Band = 1900, Mode = EDGE, Channel = 661, Frequency = 1880.0MHz	Passed	2011/08/19	Lab 2	B01_direct
24.5; Frequency Band = 1900, Mode = EDGE, Channel = 810, Frequency = 1909.8MHz	Passed	2011/08/20	Lab 2	B01_direct
24.5; Frequency Band = 1900, Mode = GSM, Channel = 512, Frequency = 1850.2MHz	Passed	2011/08/19	Lab 2	B01_direct
24.5; Frequency Band = 1900, Mode = GSM, Channel = 661, Frequency = 1880.0MHz	Passed	2011/08/19	Lab 2	B01_direct
24.5; Frequency Band = 1900, Mode = GSM, Channel = 810, Frequency = 1909.8MHz	Passed	2011/08/19	Lab 2	B01_direct
24.5; Frequency Band = FDD2, Mode = HSDPA, Channel = 9262, Frequency = 1852.4MHz	Passed	2011/08/20	Lab 2	B01_direct
24.5; Frequency Band = FDD2, Mode = HSDPA, Channel = 9400, Frequency = 1880MHz	Passed	2011/08/20	Lab 2	B01_direct
24.5; Frequency Band = FDD2, Mode = HSDPA, Channel = 9538, Frequency = 1907.6MHz	Passed	2011/08/20	Lab 2	B01_direct
24.5; Frequency Band = FDD2, Mode = HSUPA, Channel = 9262, Frequency = 1852.4MHz	Passed	2011/08/20	Lab 2	B01_direct
24.5; Frequency Band = FDD2, Mode = HSUPA, Channel = 9400, Frequency = 1880MHz	Passed	2011/08/20	Lab 2	B01_direct
24.5; Frequency Band = FDD2, Mode = HSUPA, Channel = 9538, Frequency = 1907.6MHz	Passed	2011/08/20	Lab 2	B01_direct
24.5; Frequency Band = FDD2, Mode = W-CDMA, Channel = 9262, Frequency = 1852.4MHz	Passed	2011/08/20	Lab 2	B01_direct
24.5; Frequency Band = FDD2, Mode = W-CDMA, Channel = 9400, Frequency = 1880MHz	Passed	2011/08/20	Lab 2	B01_direct
24.5; Frequency Band = FDD2, Mode = W-CDMA, Channel = 9538, Frequency = 1907.6MHz	Passed	2011/08/20	Lab 2	B01_direct

Test Case Identifier / Name *Test (condition)*	*Result*	*Date of Test*	*Lab Ref.*	*Setup*
24.6 Band edge compliance §2.1053, §24.238				
24.6; Frequency Band = 1900, Mode = EDGE, Channel = 512, Frequency = 1850.2MHz	Passed	2011/08/19	Lab 2	B01_direct
24.6; Frequency Band = 1900, Mode = EDGE, Channel = 810, Frequency = 1909.8MHz	Passed	2011/08/20	Lab 2	B01_direct
24.6; Frequency Band = 1900, Mode = GSM, Channel = 512, Frequency = 1850.2MHz	Passed	2011/08/19	Lab 2	B01_direct
24.6; Frequency Band = 1900, Mode = GSM, Channel = 810, Frequency = 1909.8MHz	Passed	2011/08/19	Lab 2	B01_direct
24.6; Frequency Band = FDD2, Mode = HSDPA, Channel = 9262, Frequency = 1852.4MHz	Passed	2011/08/20	Lab 2	B01_direct
24.6; Frequency Band = FDD2, Mode = HSDPA, Channel = 9538, Frequency = 1907.6MHz	Passed	2011/08/20	Lab 2	B01_direct
24.6; Frequency Band = FDD2, Mode = HSUPA, Channel = 9262, Frequency = 1852.4MHz	Passed	2011/08/20	Lab 2	B01_direct
24.6; Frequency Band = FDD2, Mode = HSUPA, Channel = 9538, Frequency = 1907.6MHz	Passed	2011/08/20	Lab 2	B01_direct
24.6; Frequency Band = FDD2, Mode = W-CDMA, Channel = 9262, Frequency = 1852.4MHz	Passed	2011/08/20	Lab 2	B01_direct
24.6; Frequency Band = FDD2, Mode = W-CDMA, Channel = 9538, Frequency = 1907.6MHz	Passed	2011/08/20	Lab 2	B01_direct

3.5 Detailed Results

3.5.1 24.1 RF Power Output §2.1046, §24.232

Test: 24.1; Frequency Band = 1900, Mode = EDGE, Channel = 512, Frequency = 1850.2MHz, Method = conducted

Result:	Passed
Setup No.:	B01_direct
Date of Test:	2011/08/19 19:41
Body:	FCC47CFRChIPART24PERSONAL COMMUNICATIONS SERVICES
Test Specification:	FCC part 2 and 24

Detailed Results:

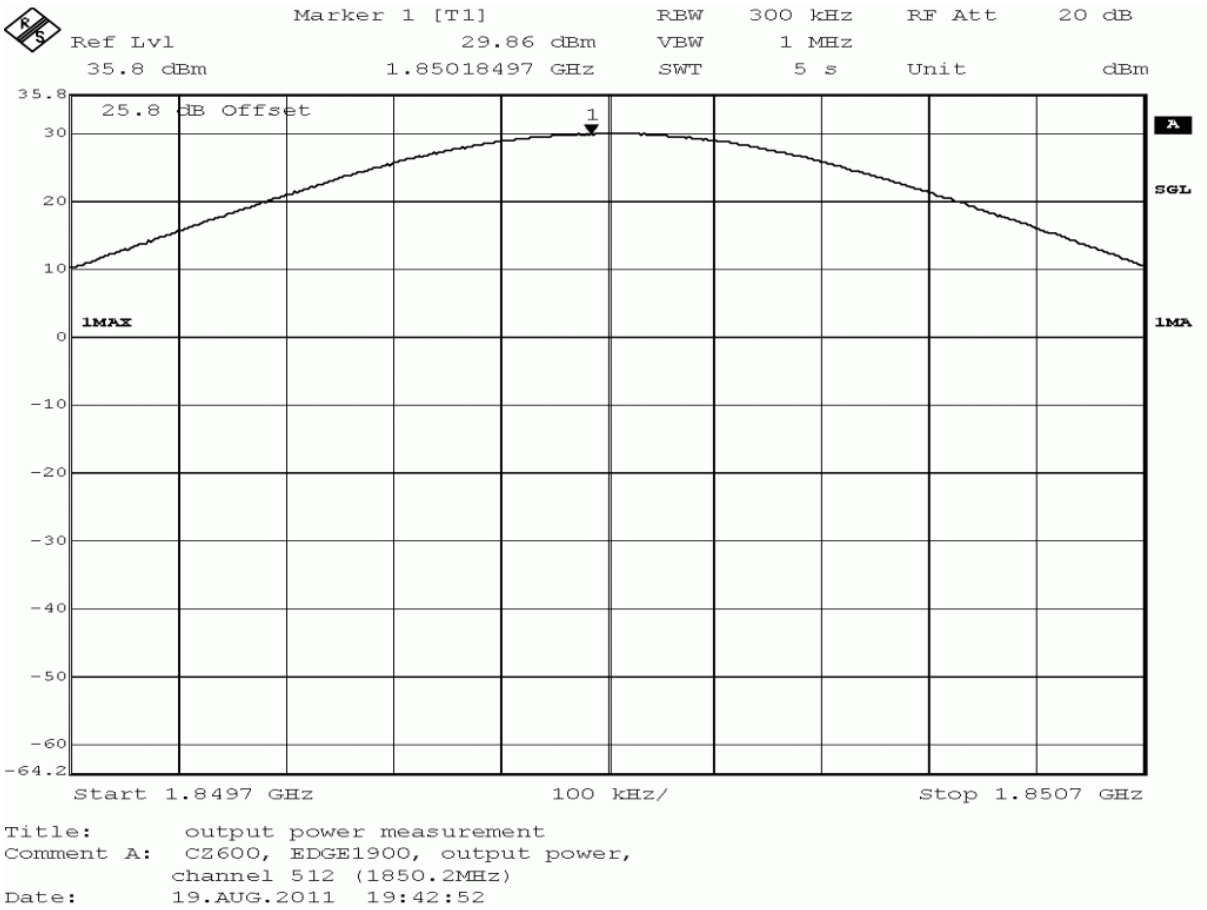

detector	trace	resolution bandwidth /kHz	conducted peak value /dBm	verdict
peak	maxhold	300	29.86	passed
average	maxhold	300	26.24	passed
rms	maxhold	300	26.82	passed

no external antenna gain is specified, the verdict is valid
for external antenna gains equal or less than
3.14 dBi

Test: 24.1; Frequency Band = 1900, Mode = EDGE, Channel = 661, Frequency = 1880.0MHz, Method = conducted

Result:	Passed
Setup No.:	B01_direct
Date of Test:	2011/08/19 19:34
Body:	FCC47CFRChIPART24PERSONAL COMMUNICATIONS SERVICES
Test Specification:	FCC part 2 and 24

Detailed Results:

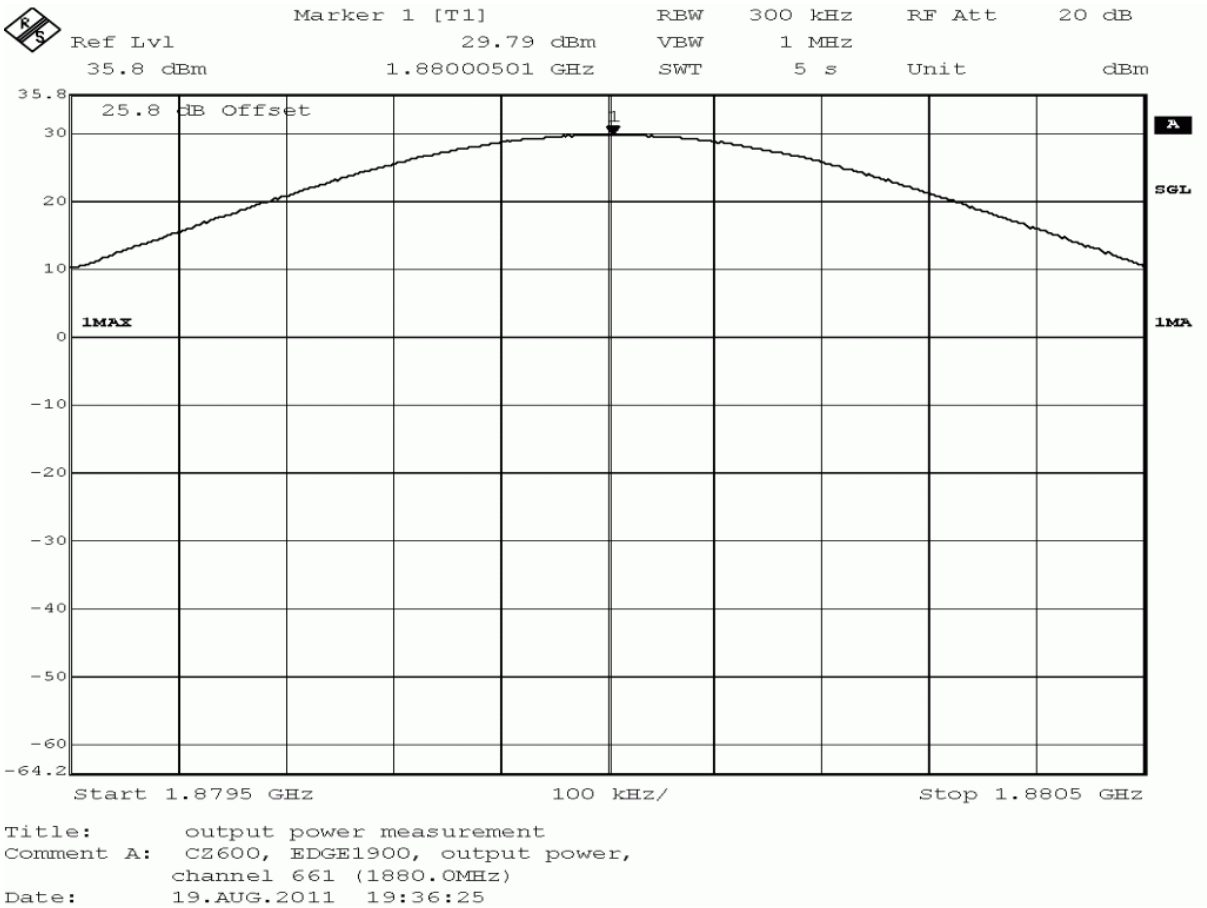

Title: output power measurement
Comment A: CZ600, EDGE1900, output power, channel 661 (1880.0MHz)
Date: 19.AUG.2011 19:36:25

detector	trace	resolution bandwidth /kHz	conducted peak value /dBm	verdict
peak	maxhold	300	29.79	passed
average	maxhold	300	25.96	passed
rms	maxhold	300	26.64	passed

no external antenna gain is specified, the verdict is valid
for external antenna gains equal or less than
3.21 dBi

Test: 24.1; Frequency Band = 1900, Mode = EDGE, Channel = 810, Frequency = 1909.8MHz, Method = conducted

Result:	Passed
Setup No.:	B01_direct
Date of Test:	2011/08/20 1:55
Body:	FCC47CFRChIPART24PERSONAL COMMUNICATIONS SERVICES
Test Specification:	FCC part 2 and 24

Detailed Results:

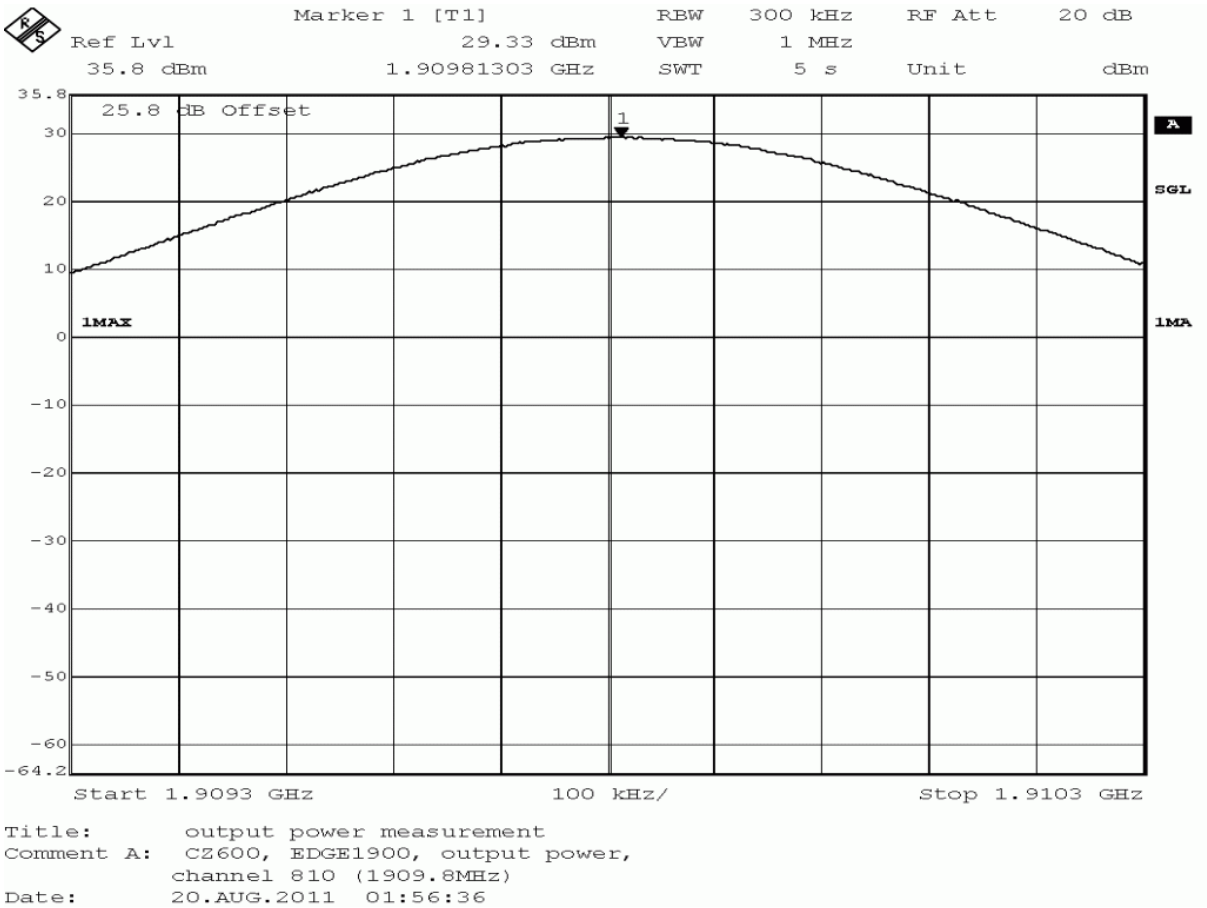

Title: output power measurement
Comment A: CZ600, EDGE1900, output power, channel 810 (1909.8MHz)
Date: 20.AUG.2011 01:56:36

detector	trace	resolution bandwidth /kHz	conducted peak value /dBm	verdict
peak	maxhold	300	29.33	passed
average	maxhold	300	25.72	passed
rms	maxhold	300	26.30	passed

no external antenna gain is specified, the verdict is valid
for external antenna gains equal or less than
3.67 dBi

Test: 24.1; Frequency Band = 1900, Mode = GSM, Channel = 512, Frequency = 1850.2MHz, Method = conducted

Result:	Passed
Setup No.:	B01_direct
Date of Test:	2011/08/19 19:19
Body:	FCC47CFRChIPART24PERSONAL COMMUNICATIONS SERVICES
Test Specification:	FCC part 2 and 24

Detailed Results:

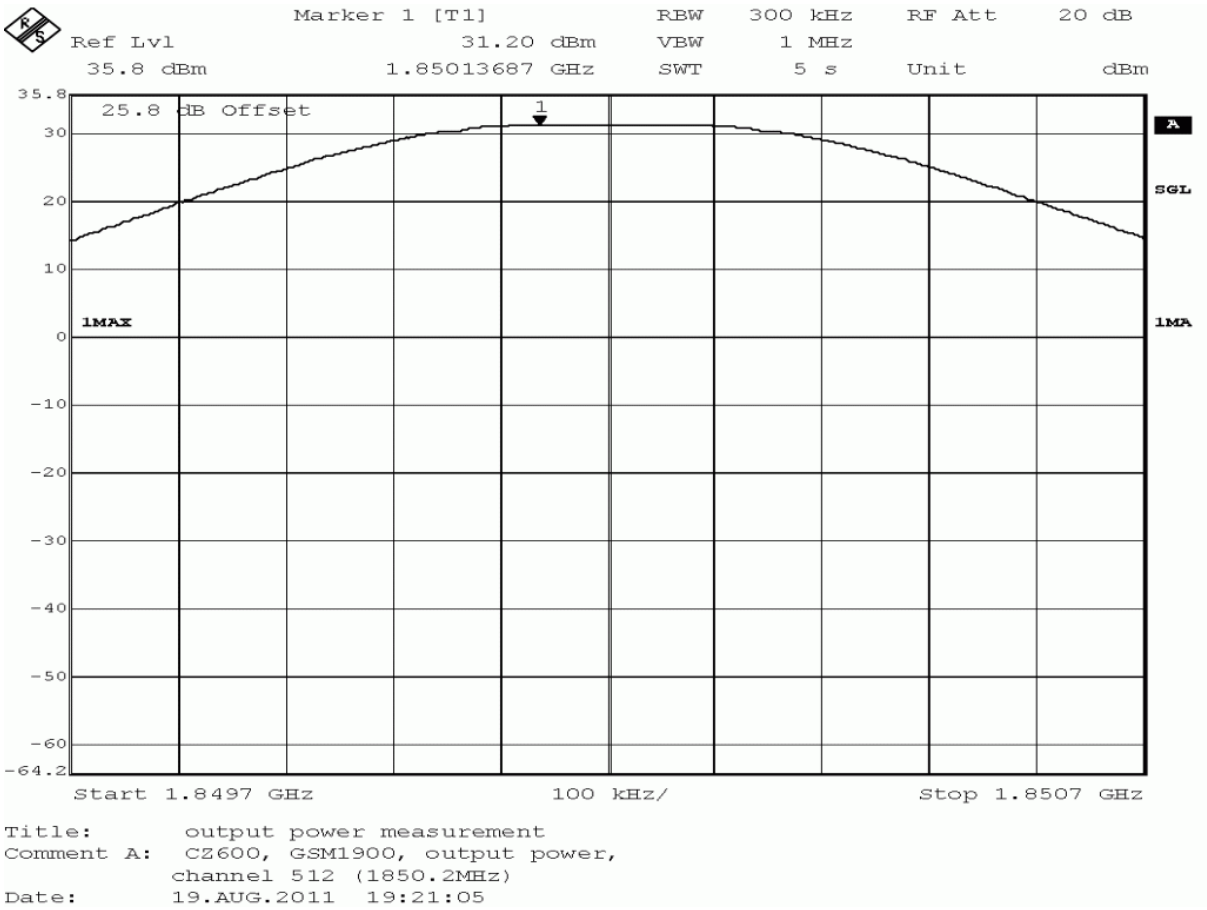

Title: output power measurement
Comment A: CZ600, GSM1900, output power, channel 512 (1850.2MHz)
Date: 19.AUG.2011 19:21:05

detector	trace	resolution bandwidth /kHz	conducted peak value /dBm	verdict
peak	maxhold	300	31.20	passed
average	maxhold	300	30.85	passed
rms	maxhold	300	30.96	passed

no external antenna gain is specified, the verdict is valid
for external antenna gains equal or less than
1.80 dBi

Test: 24.1; Frequency Band = 1900, Mode = GSM, Channel = 661, Frequency = 1880.0MHz, Method = conducted

Result:	Passed
Setup No.:	B01_direct
Date of Test:	2011/08/19 19:09
Body:	FCC47CFRChIPART24PERSONAL COMMUNICATIONS SERVICES
Test Specification:	FCC part 2 and 24

Detailed Results:

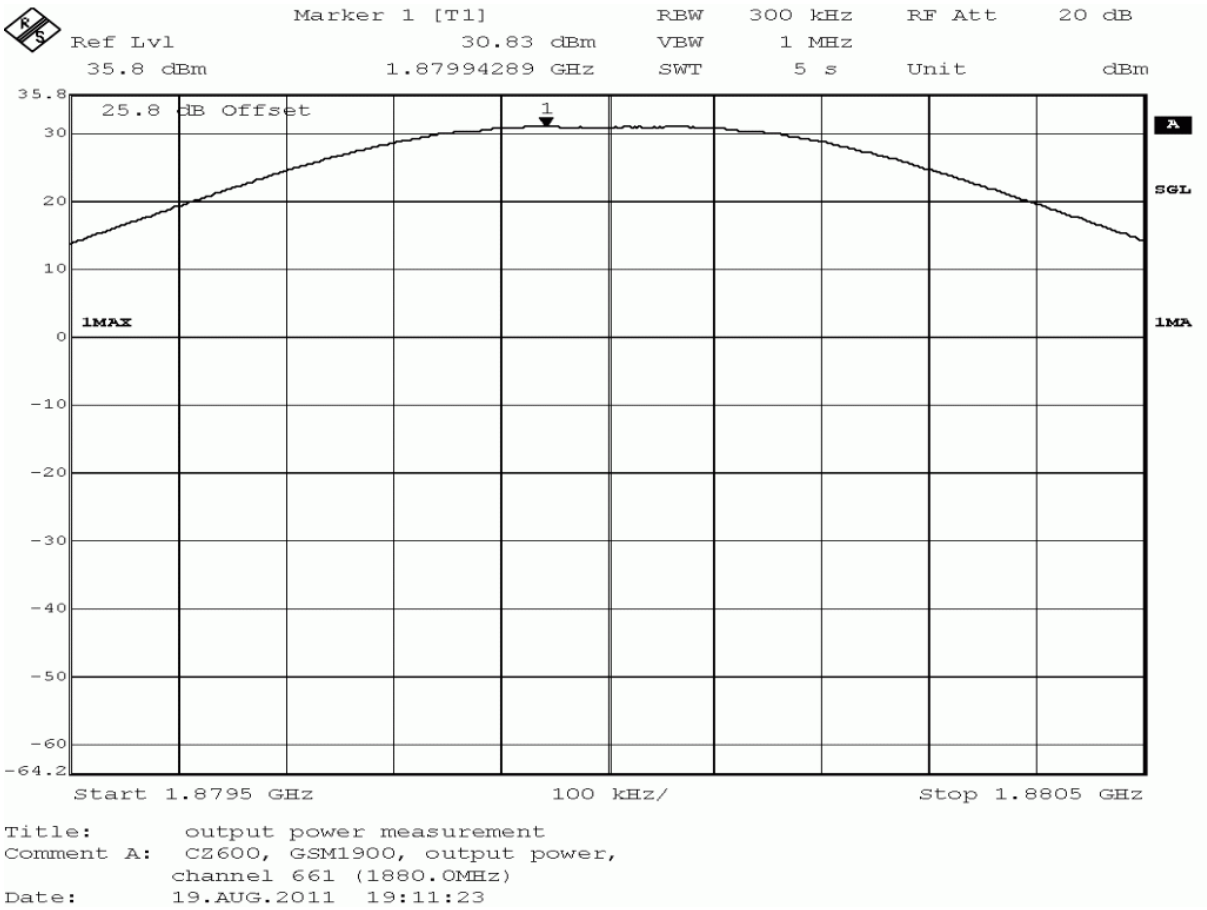

Title: output power measurement
Comment A: CZ600, GSM1900, output power, channel 661 (1880.0MHz)
Date: 19.AUG.2011 19:11:23

detector	trace	resolution bandwidth /kHz	conducted peak value /dBm	verdict
peak	maxhold	300	30.83	passed
average	maxhold	300	30.51	passed
rms	maxhold	300	30.59	passed

no external antenna gain is specified, the verdict is valid
for external antenna gains equal or less than
2.17 dBi

Test: 24.1; Frequency Band = 1900, Mode = GSM, Channel = 810, Frequency = 1909.8MHz, Method = conducted

Result:	Passed
Setup No.:	B01_direct
Date of Test:	2011/08/19 19:26
Body:	FCC47CFRChIPART24PERSONAL COMMUNICATIONS SERVICES
Test Specification:	FCC part 2 and 24

Detailed Results:

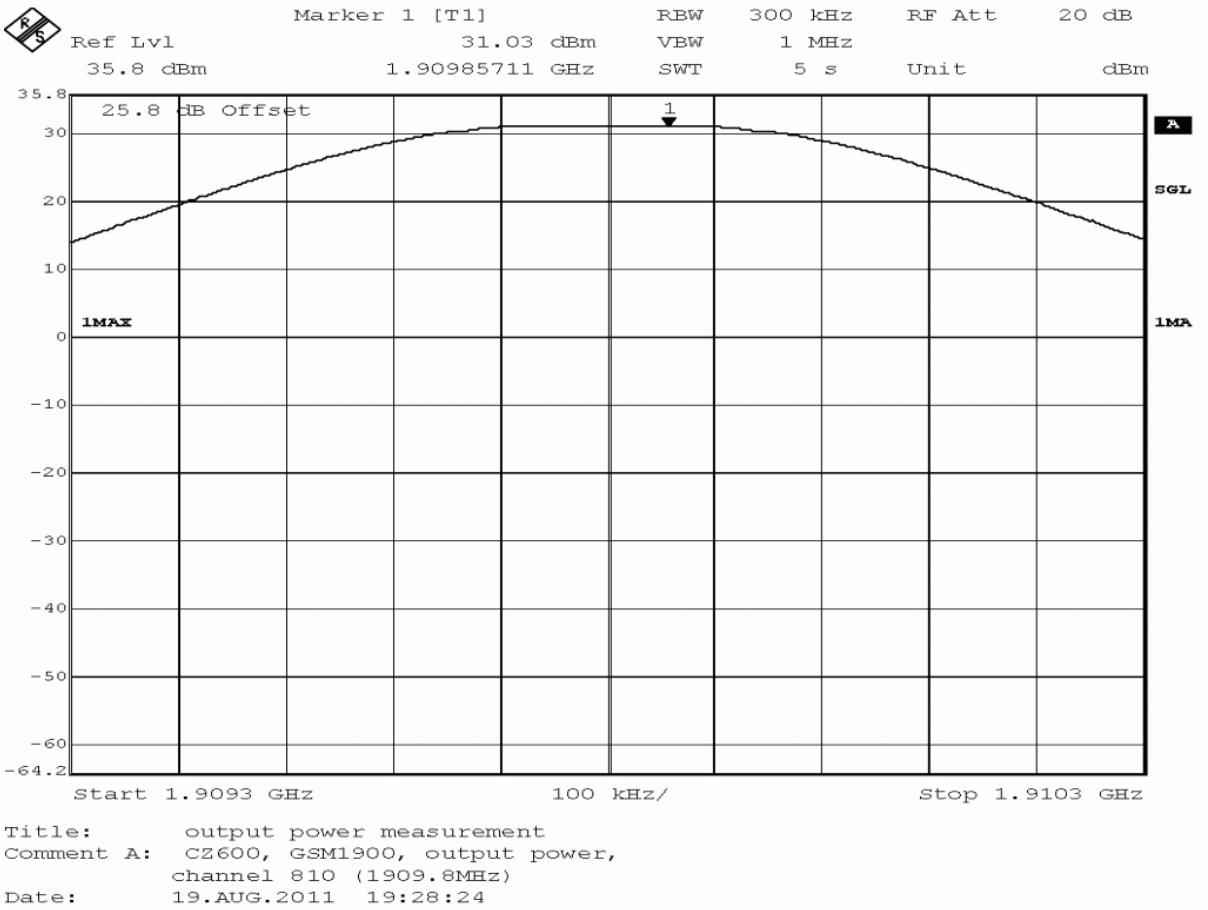

Title: output power measurement
Comment A: CZ600, GSM1900, output power, channel 810 (1909.8MHz)
Date: 19.AUG.2011 19:28:24

detector	trace	resolution bandwidth /kHz	conducted peak value /dBm	verdict
peak	maxhold	300	31.03	passed
average	maxhold	300	30.66	passed
rms	maxhold	300	30.77	passed

no external antenna gain is specified, the verdict is valid
for external antenna gains equal or less than
1.97 dBi

Test: 24.1; Frequency Band = FDD2, Mode = HSDPA_subtest_1, Channel = 9262, Frequency = 1852.4MHz, Method = conducted

Result:	Passed
Setup No.:	B01_direct
Date of Test:	2011/08/20 1:03
Body:	FCC47CFRChIPART24PERSONAL COMMUNICATIONS SERVICES
Test Specification:	FCC part 2 and 24

Detailed Results:

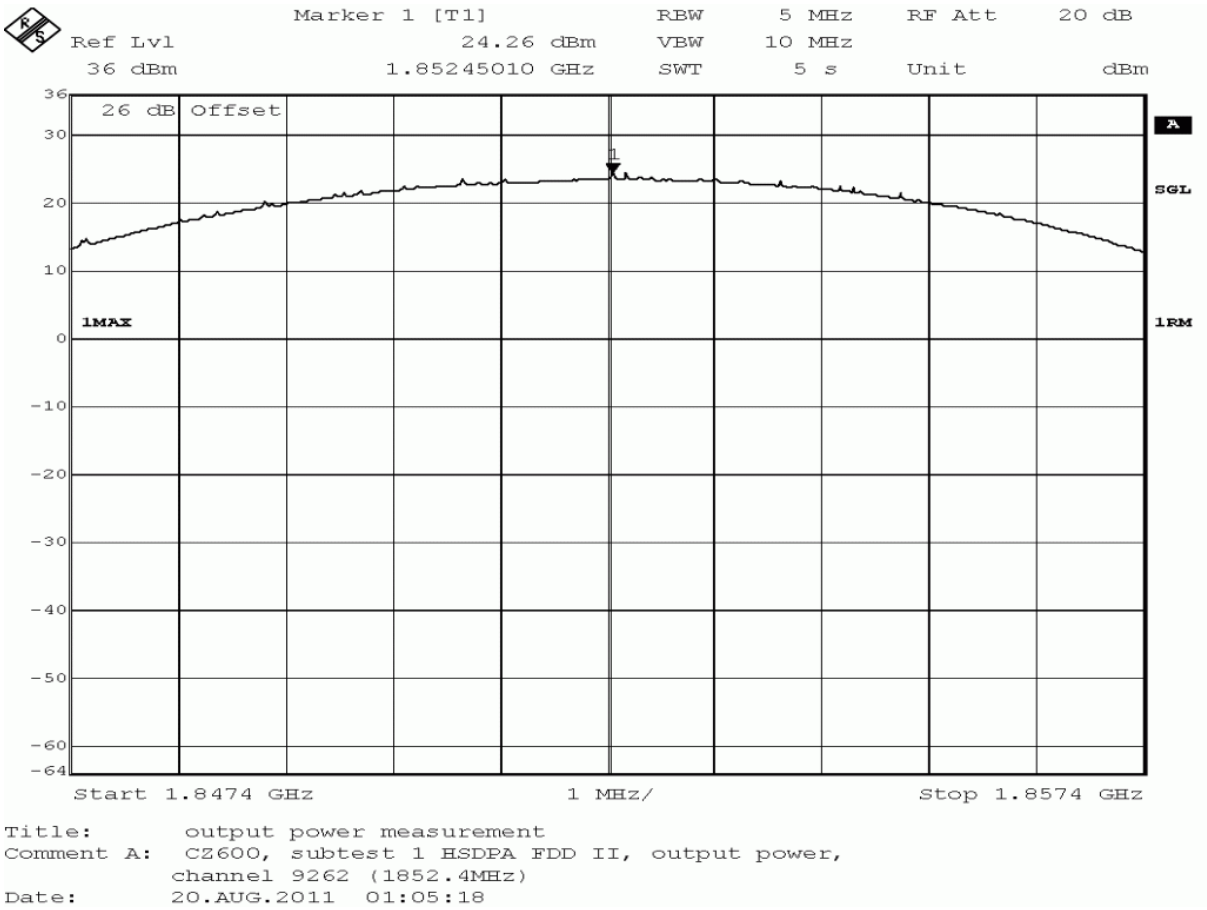

detector	trace	resolution bandwidth /kHz	conducted peak value /dBm	verdict
peak	maxhold	5000	29.60	passed
average	maxhold	5000	23.51	passed
rms	maxhold	5000	24.26	passed

no external antenna gain is specified, the verdict is valid
for external antenna gains equal or less than
3.40 dBi

Test: 24.1; Frequency Band = FDD2, Mode = HSDPA_subtest_1, Channel = 9400, Frequency = 1880MHz, Method = conducted

Result:	Passed
Setup No.:	B01_direct
Date of Test:	2011/08/20 0:50
Body:	FCC47CFRChIPART24PERSONAL COMMUNICATIONS SERVICES
Test Specification:	FCC part 2 and 24

Detailed Results:

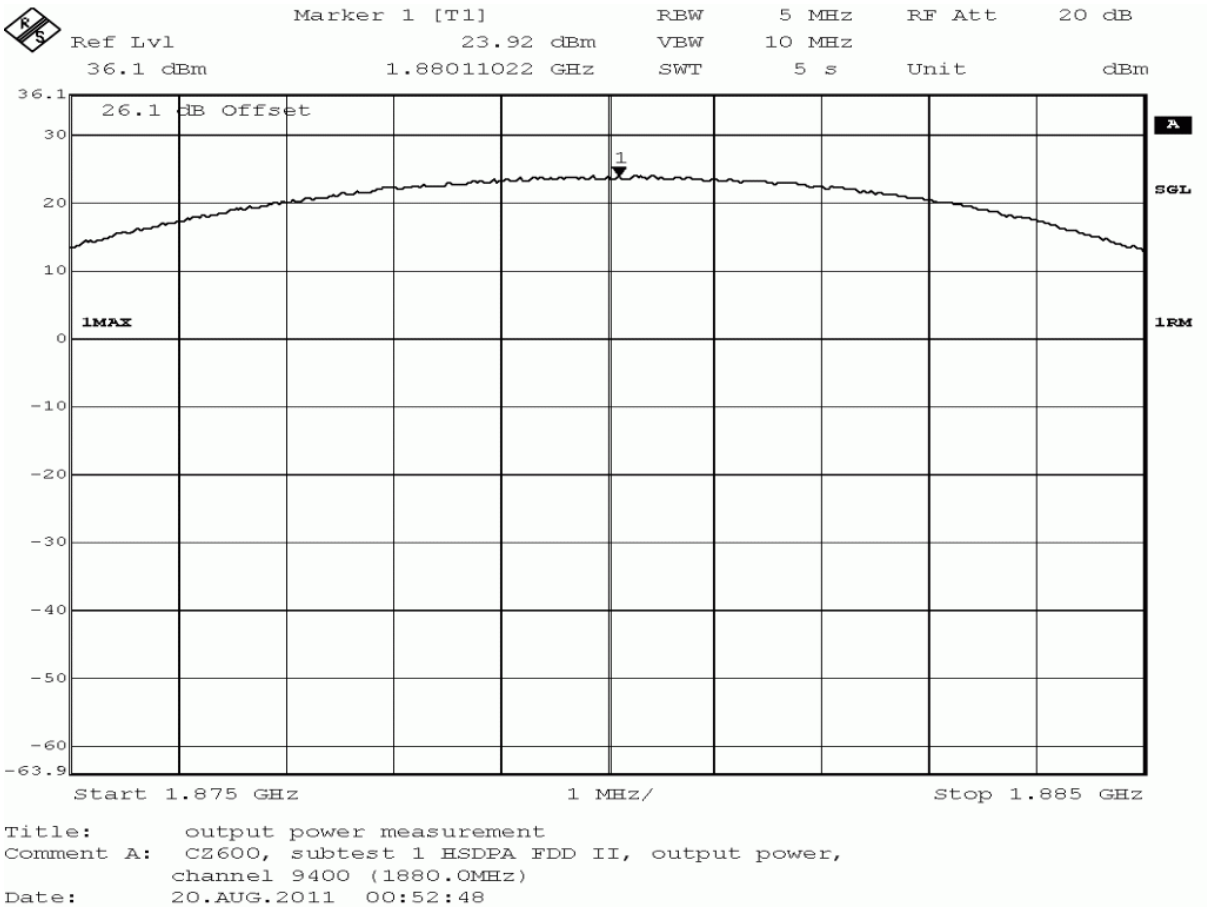

detector	trace	resolution bandwidth /kHz	conducted peak value /dBm	verdict
peak	maxhold	5000	29.44	passed
average	maxhold	5000	23.51	passed
rms	maxhold	5000	23.92	passed

no external antenna gain is specified, the verdict is valid
for external antenna gains equal or less than
3.56 dBi

Test: 24.1; Frequency Band = FDD2, Mode = HSDPA_subtest_1, Channel = 9538, Frequency = 1907.6MHz, Method = conducted

Result:	Passed
Setup No.:	B01_direct
Date of Test:	2011/08/20 1:13
Body:	FCC47CFRChIPART24PERSONAL COMMUNICATIONS SERVICES
Test Specification:	FCC part 2 and 24

Detailed Results:

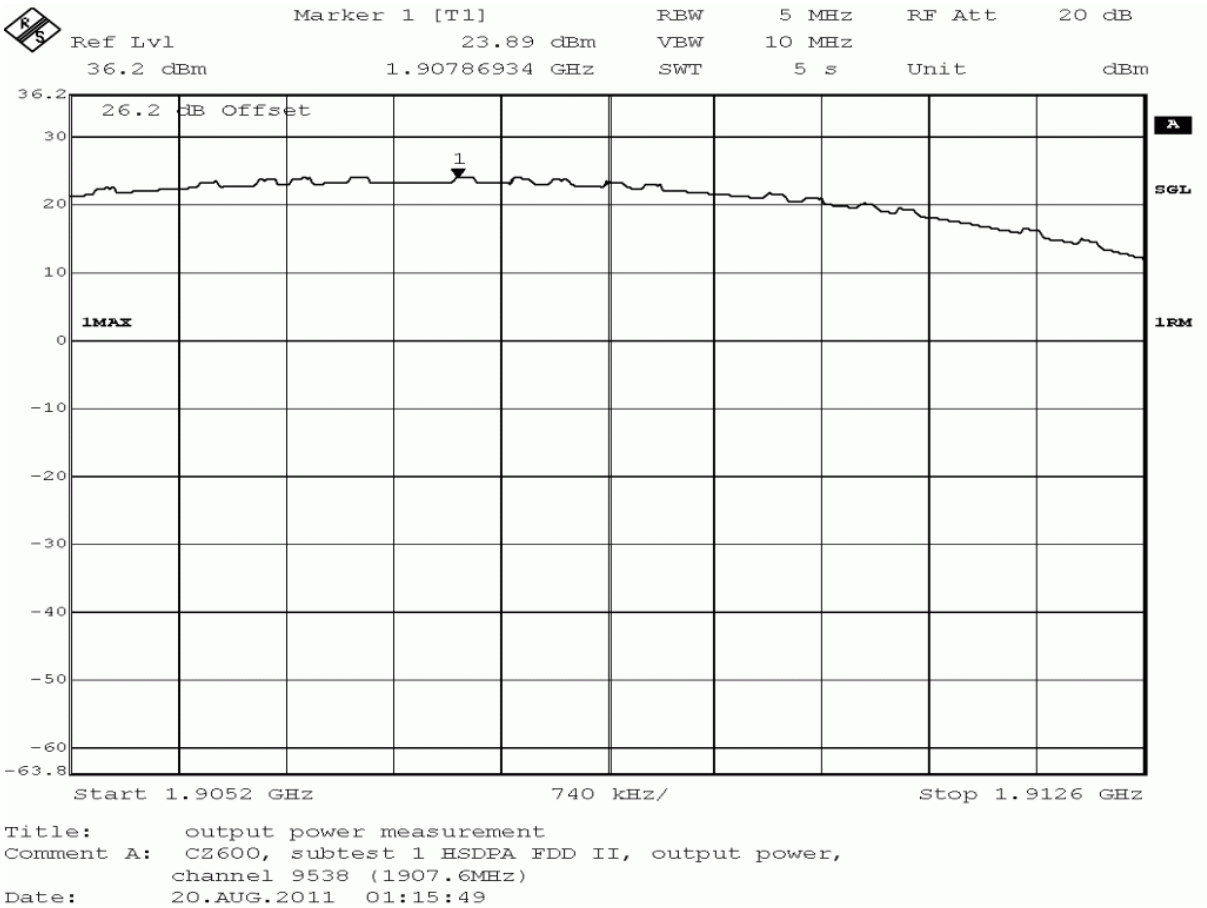

detector	trace	resolution bandwidth /kHz	conducted peak value /dBm	verdict
peak	maxhold	5000	29.41	passed
average	maxhold	5000	23.66	passed
rms	maxhold	5000	23.89	passed

no external antenna gain is specified, the verdict is valid
for external antenna gains equal or less than
3.59 dBi

Test: 24.1; Frequency Band = FDD2, Mode = HSDPA_subtest_2, Channel = 9262, Frequency = 1852.4MHz, Method = conducted

Result:	Passed
Setup No.:	B01_direct
Date of Test:	2011/08/20 1:21
Body:	FCC47CFRChIPART24PERSONAL COMMUNICATIONS SERVICES
Test Specification:	FCC part 2 and 24

Detailed Results:

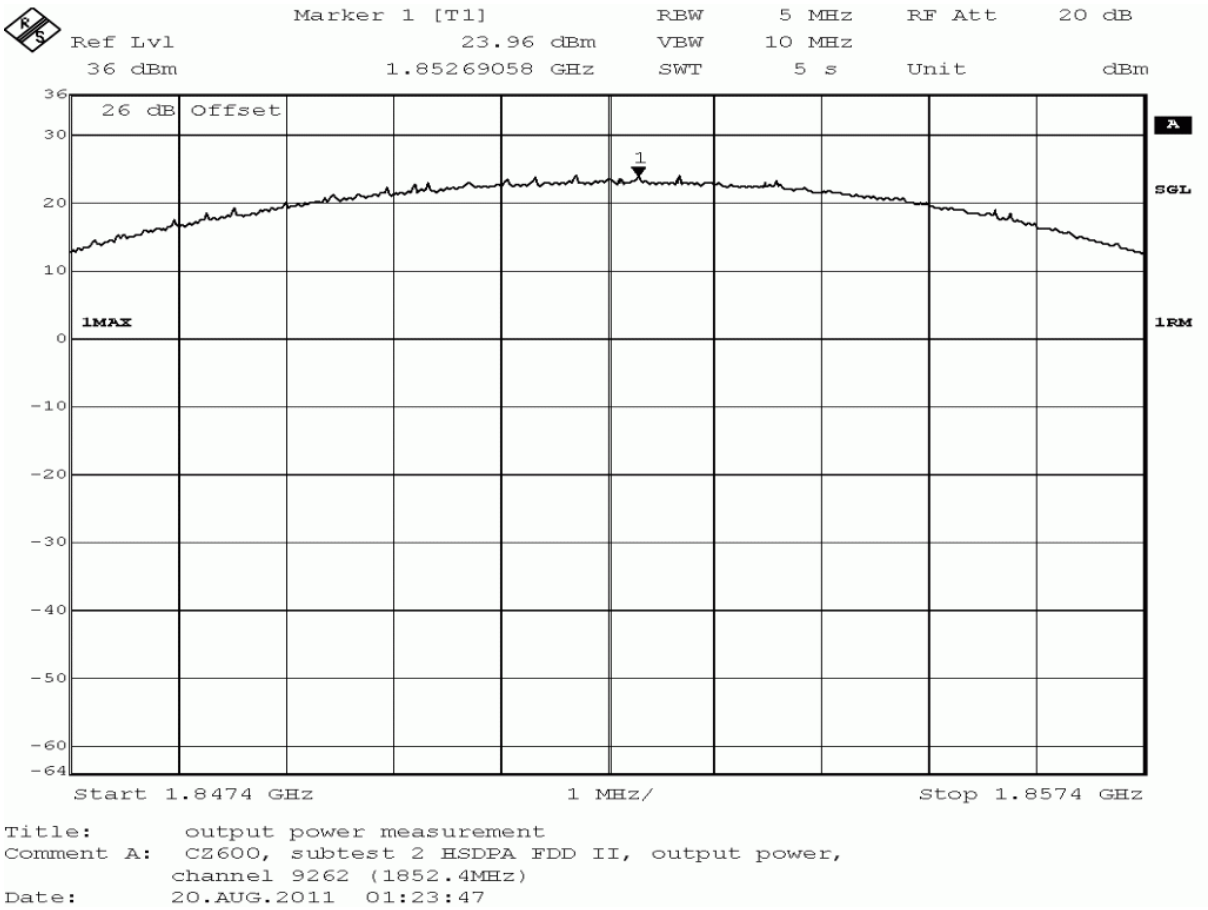

detector	trace	resolution bandwidth /kHz	conducted peak value /dBm	verdict
peak	maxhold	5000	30.50	passed
average	maxhold	5000	23.22	passed
rms	maxhold	5000	23.96	passed

no external antenna gain is specified, the verdict is valid
for external antenna gains equal or less than
2.50 dBi

Test: 24.1; Frequency Band = FDD2, Mode = HSDPA_subtest_2, Channel = 9400, Frequency = 1880MHz, Method = conducted

Result:	Passed
Setup No.:	B01_direct
Date of Test:	2011/08/20 1:19
Body:	FCC47CFRChIPART24PERSONAL COMMUNICATIONS SERVICES
Test Specification:	FCC part 2 and 24

Detailed Results:

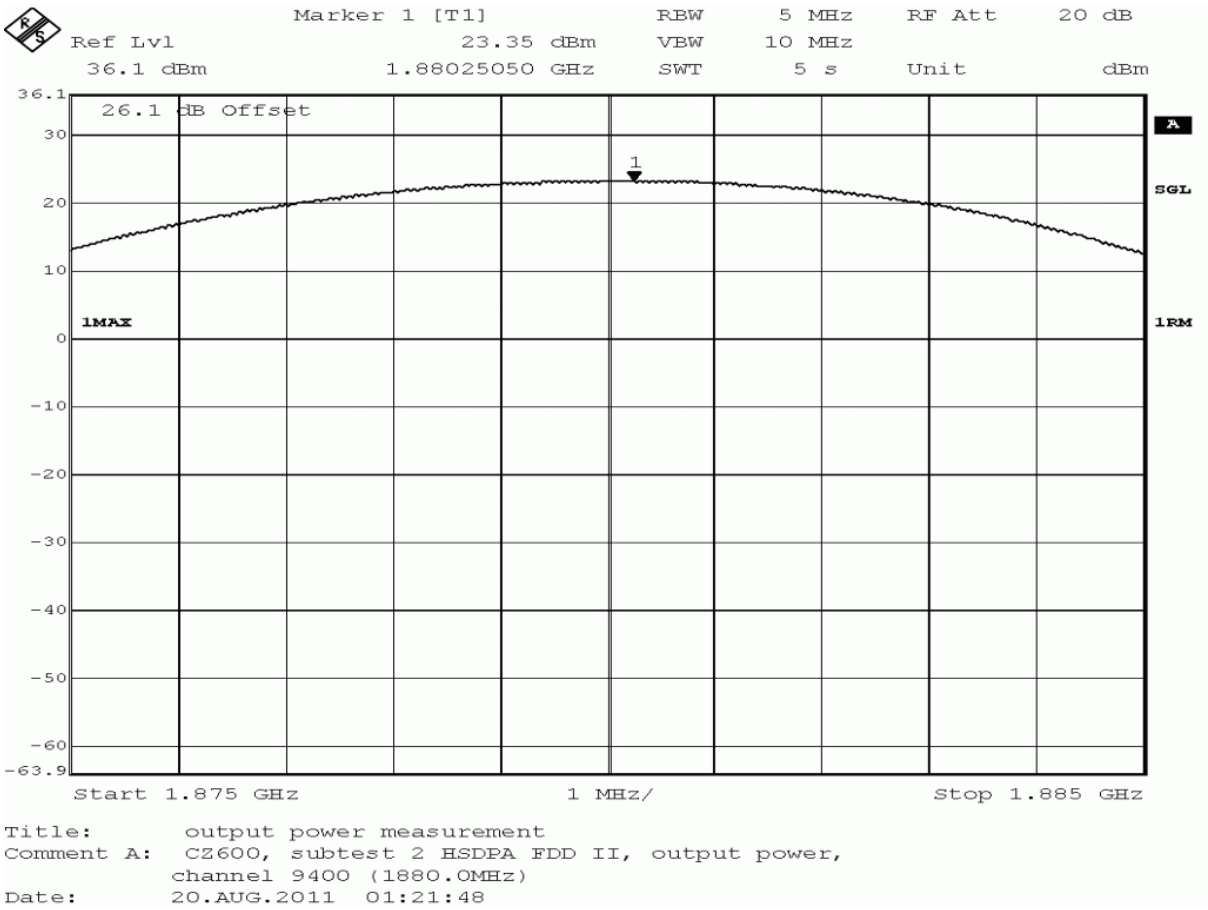

detector	trace	resolution bandwidth /kHz	conducted peak value /dBm	verdict
peak	maxhold	5000	30.43	passed
average	maxhold	5000	22.71	passed
rms	maxhold	5000	23.35	passed

no external antenna gain is specified, the verdict is valid
for external antenna gains equal or less than
10.29 dBi

Test: 24.1; Frequency Band = FDD2, Mode = HSDPA_subtest_2, Channel = 9538, Frequency = 1907.6MHz, Method = conducted

Result:	Passed
Setup No.:	B01_direct
Date of Test:	2011/08/20 1:20
Body:	FCC47CFRChIPART24PERSONAL COMMUNICATIONS SERVICES
Test Specification:	FCC part 2 and 24

Detailed Results:

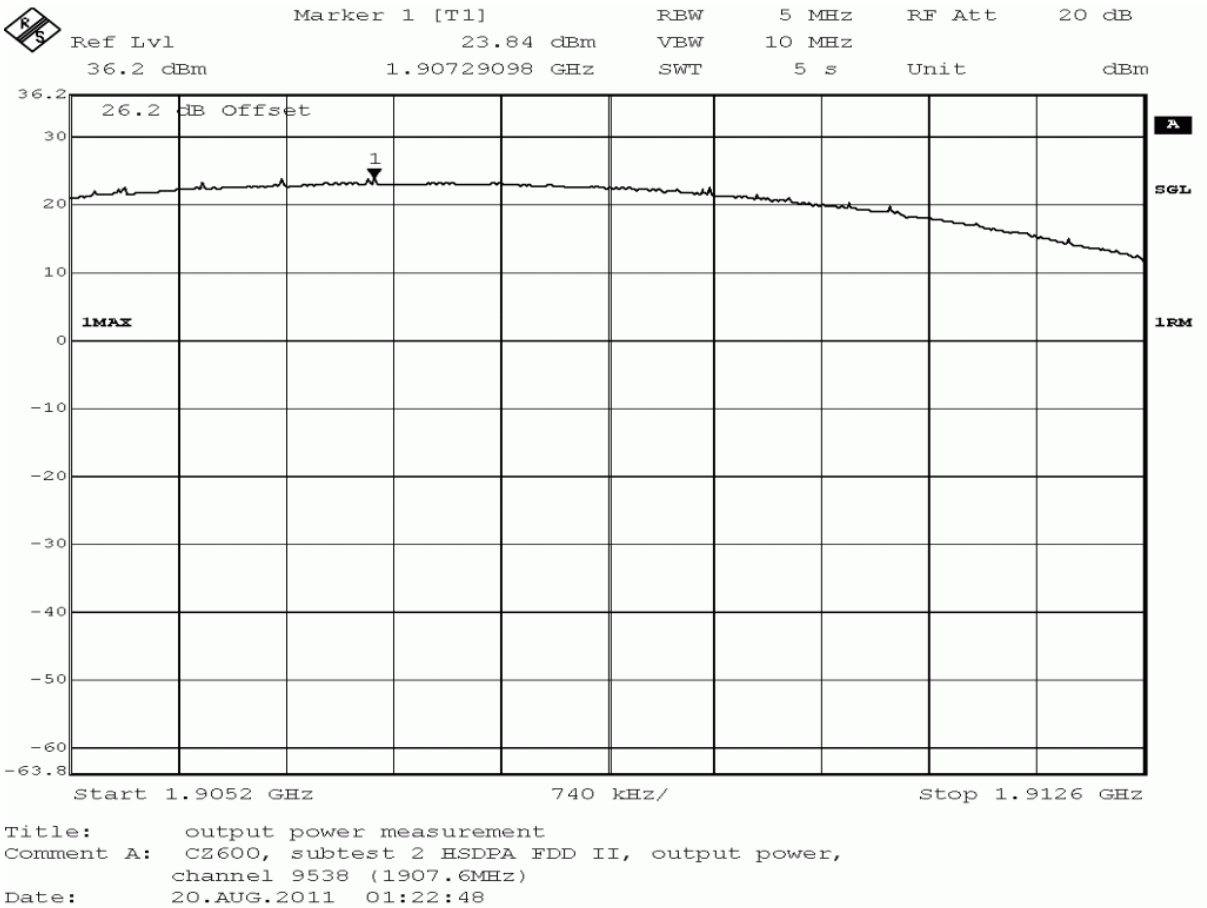

detector	trace	resolution bandwidth /kHz	conducted peak value /dBm	verdict
peak	maxhold	5000	30.53	passed
average	maxhold	5000	22.87	passed
rms	maxhold	5000	23.84	passed

no external antenna gain is specified, the verdict is valid
for external antenna gains equal or less than
10.13 dBi

Test: 24.1; Frequency Band = FDD2, Mode = HSDPA_subtest_3, Channel = 9262, Frequency = 1852.4MHz, Method = conducted

Result:	Passed
Setup No.:	B01_direct
Date of Test:	2011/08/20 1:24
Body:	FCC47CFRChIPART24PERSONAL COMMUNICATIONS SERVICES
Test Specification:	FCC part 2 and 24

Detailed Results:

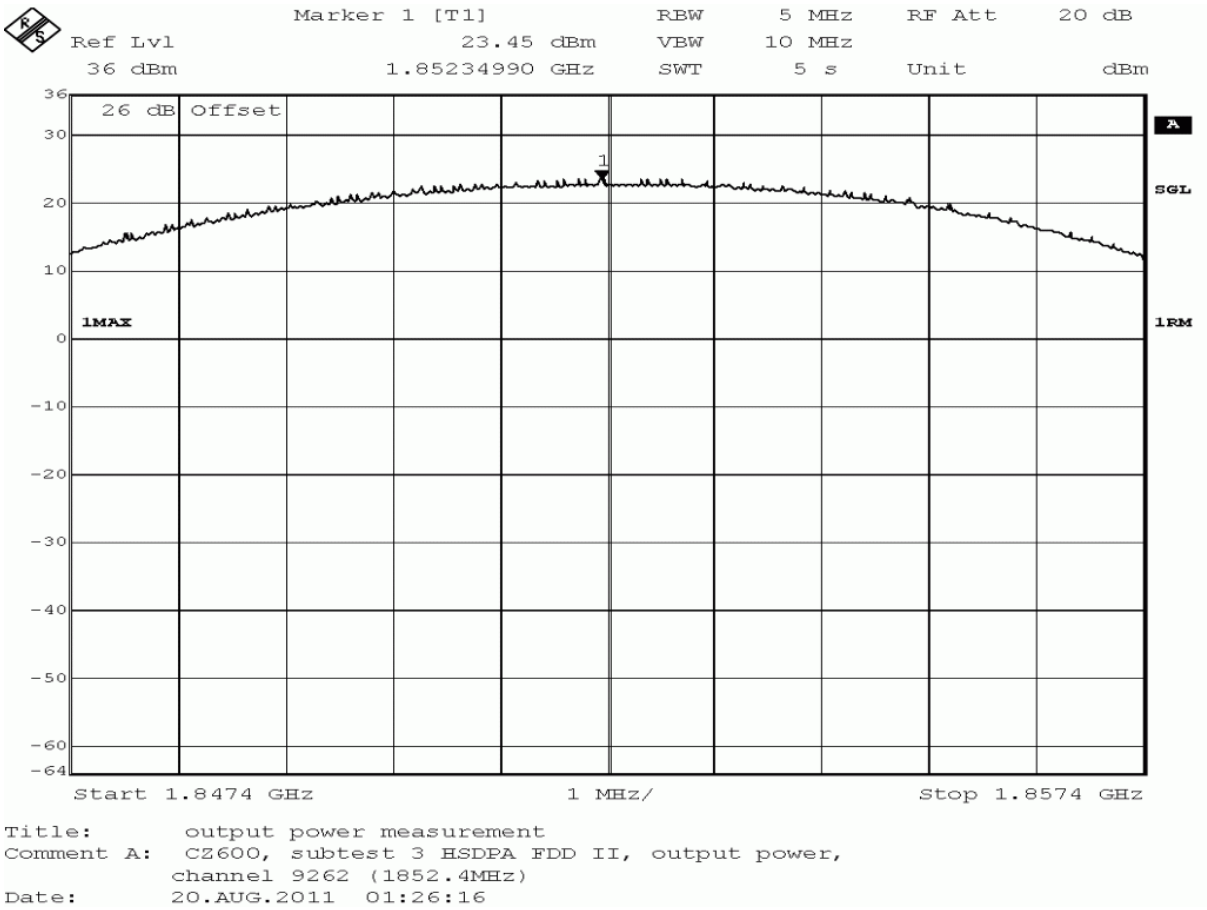

detector	trace	resolution bandwidth /kHz	conducted peak value /dBm	verdict
peak	maxhold	5000	31.40	passed
average	maxhold	5000	22.23	passed
rms	maxhold	5000	23.45	passed

no external antenna gain is specified, the verdict is valid
for external antenna gains equal or less than
1.60 dBi

Test: 24.1; Frequency Band = FDD2, Mode = HSDPA_subtest_3, Channel = 9400, Frequency = 1880MHz, Method = conducted

Result:	Passed
Setup No.:	B01_direct
Date of Test:	2011/08/20 1:23
Body:	FCC47CFRChIPART24PERSONAL COMMUNICATIONS SERVICES
Test Specification:	FCC part 2 and 24

Detailed Results:

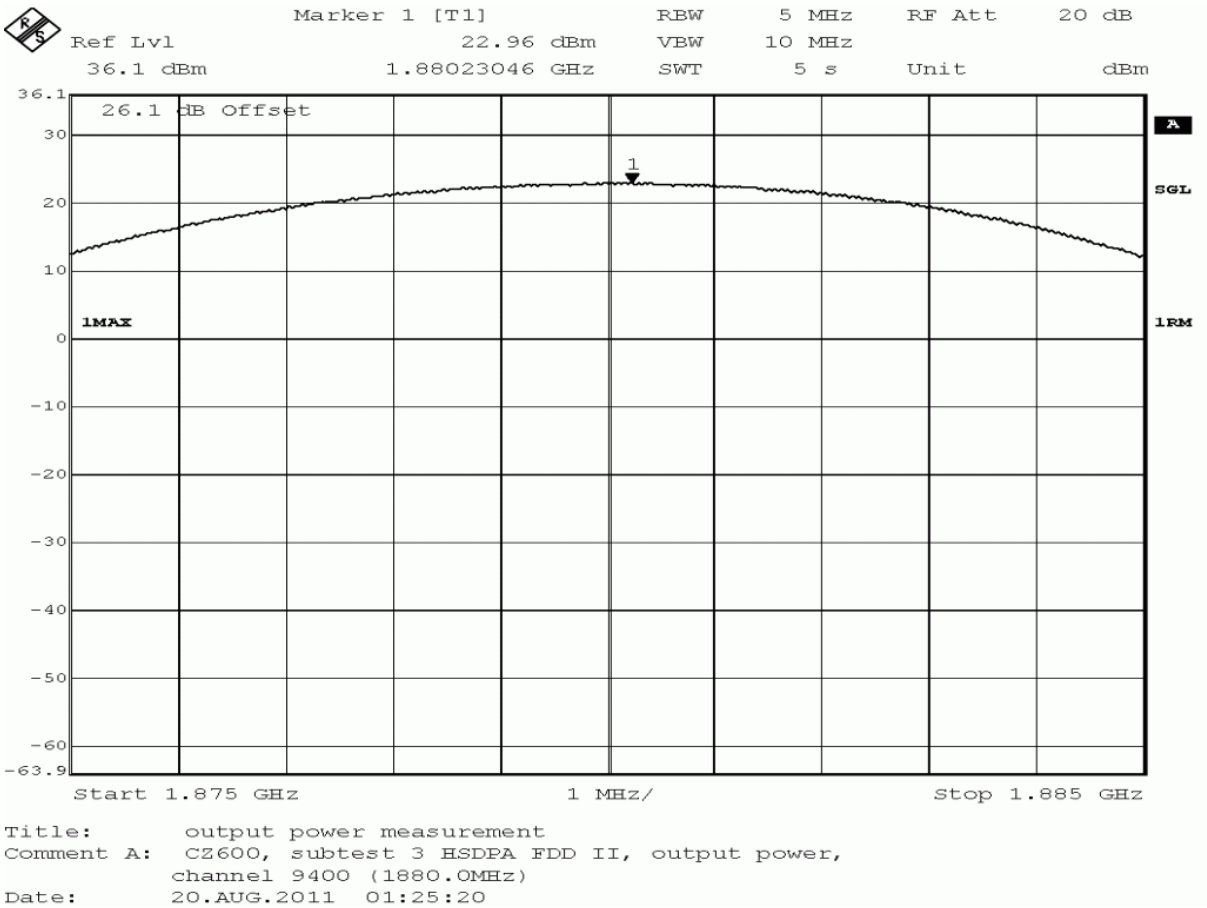

detector	trace	resolution bandwidth /kHz	conducted peak value /dBm	verdict
peak	maxhold	5000	30.85	passed
average	maxhold	5000	21.92	passed
rms	maxhold	5000	22.96	passed

no external antenna gain is specified, the verdict is valid
for external antenna gains equal or less than
10.04 dBi

Test: 24.1; Frequency Band = FDD2, Mode = HSDPA_subtest_3, Channel = 9538, Frequency = 1907.6MHz, Method = conducted

Result:	Passed
Setup No.:	B01_direct
Date of Test:	2011/08/20 1:25
Body:	FCC47CFRChIPART24PERSONAL COMMUNICATIONS SERVICES
Test Specification:	FCC part 2 and 24

Detailed Results:

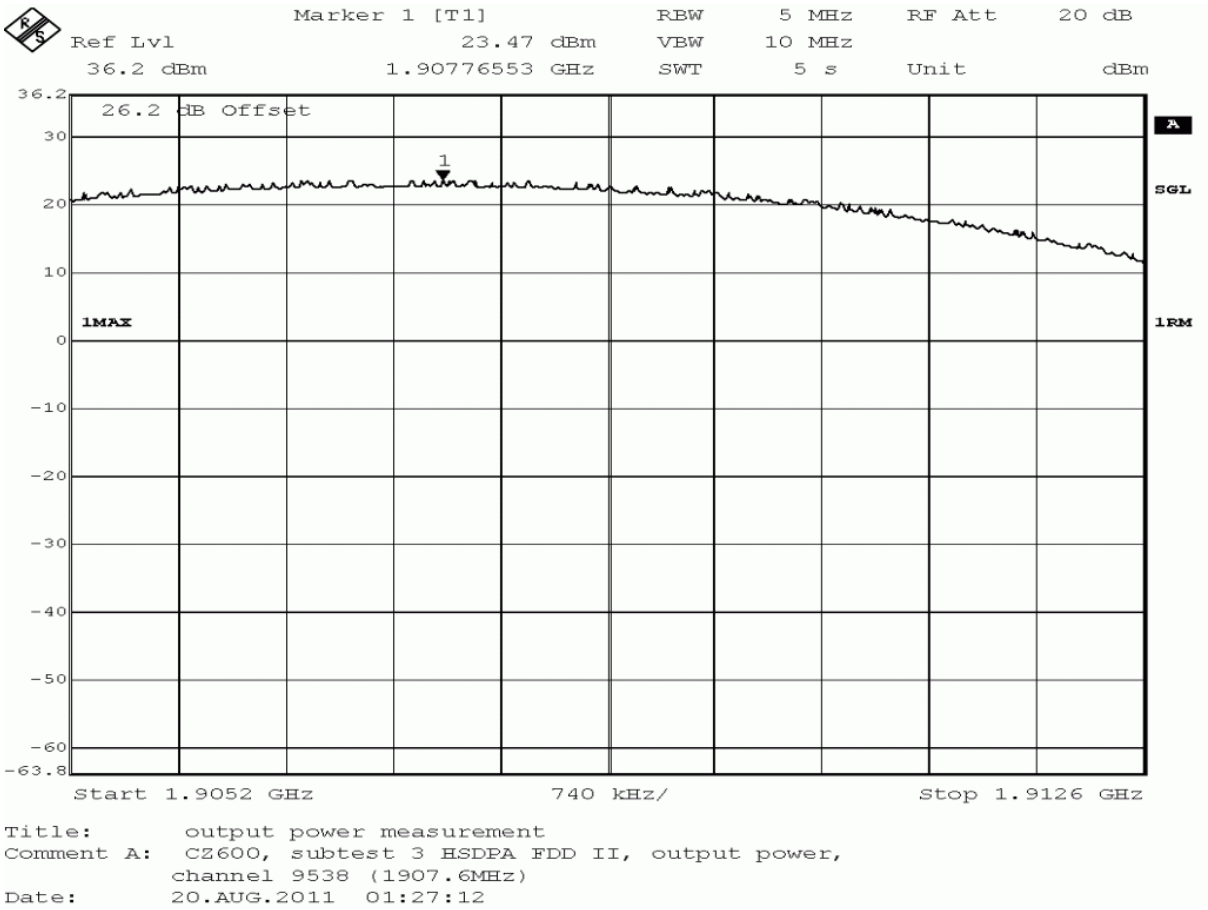

detector	trace	resolution bandwidth /kHz	conducted peak value /dBm	verdict
peak	maxhold	5000	30.70	passed
average	maxhold	5000	22.40	passed
rms	maxhold	5000	23.47	passed

no external antenna gain is specified, the verdict is valid
for external antenna gains equal or less than
10.60 dBi

Test: 24.1; Frequency Band = FDD2, Mode = HSDPA_subtest_4, Channel = 9262, Frequency = 1852.4MHz, Method = conducted

Result:	Passed
Setup No.:	B01_direct
Date of Test:	2011/08/20 1:27
Body:	FCC47CFRChIPART24PERSONAL COMMUNICATIONS SERVICES
Test Specification:	FCC part 2 and 24

Detailed Results:

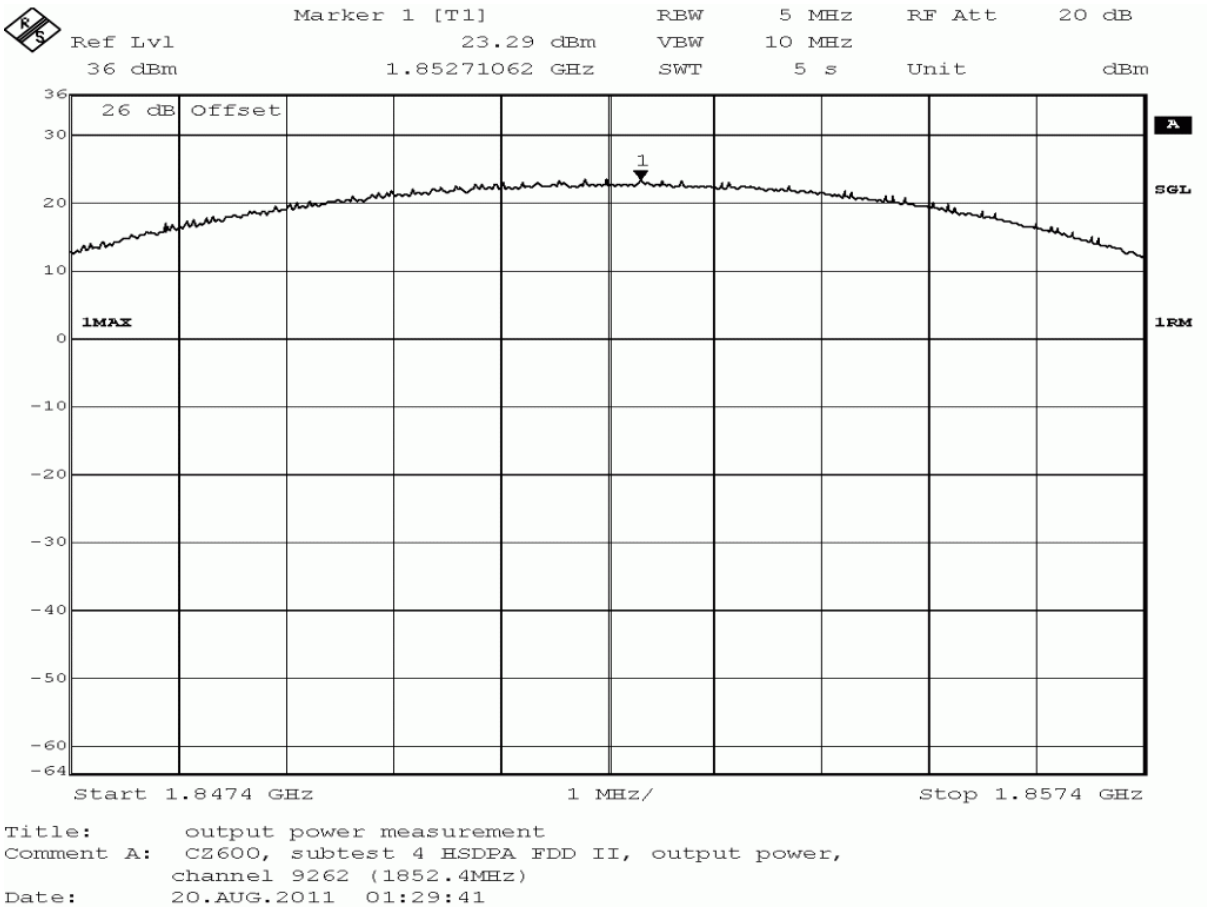

detector	trace	resolution bandwidth /kHz	conducted peak value /dBm	verdict
peak	maxhold	5000	30.90	passed
average	maxhold	5000	22.02	passed
rms	maxhold	5000	23.29	passed

no external antenna gain is specified, the verdict is valid
for external antenna gains equal or less than
10.98 dBi

Test: 24.1; Frequency Band = FDD2, Mode = HSDPA_subtest_4, Channel = 9400, Frequency = 1880MHz, Method = conducted

Result:	Passed
Setup No.:	B01_direct
Date of Test:	2011/08/20 1:26
Body:	FCC47CFRChIPART24PERSONAL COMMUNICATIONS SERVICES
Test Specification:	FCC part 2 and 24

Detailed Results:

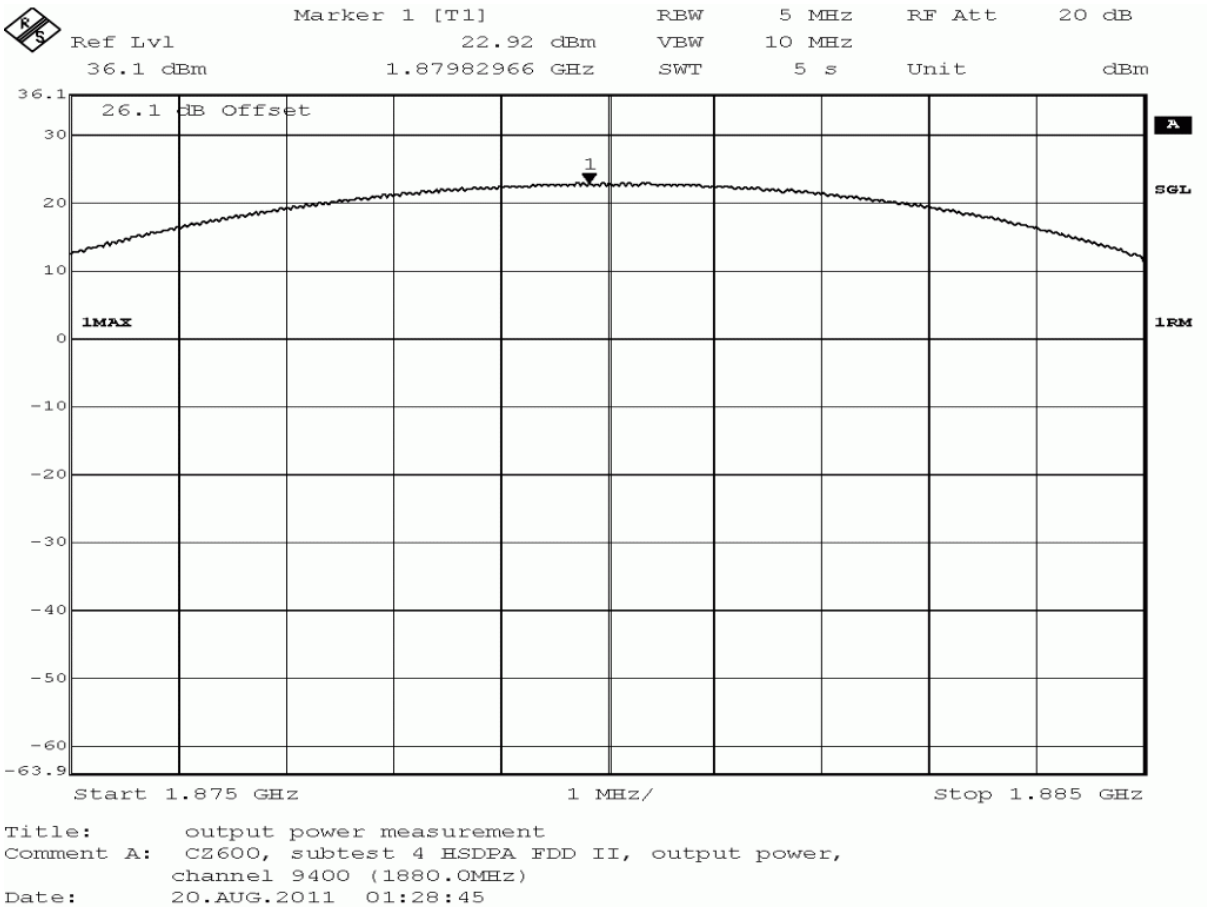

detector	trace	resolution bandwidth /kHz	conducted peak value /dBm	verdict
peak	maxhold	5000	30.60	passed
average	maxhold	5000	21.84	passed
rms	maxhold	5000	22.92	passed

no external antenna gain is specified, the verdict is valid
for external antenna gains equal or less than
10.08 dBi

Test: 24.1; Frequency Band = FDD2, Mode = HSDPA_subtest_4, Channel = 9538, Frequency = 1907.6MHz, Method = conducted

Result:	Passed
Setup No.:	B01_direct
Date of Test:	2011/08/20 1:28
Body:	FCC47CFRChIPART24PERSONAL COMMUNICATIONS SERVICES
Test Specification:	FCC part 2 and 24

Detailed Results:

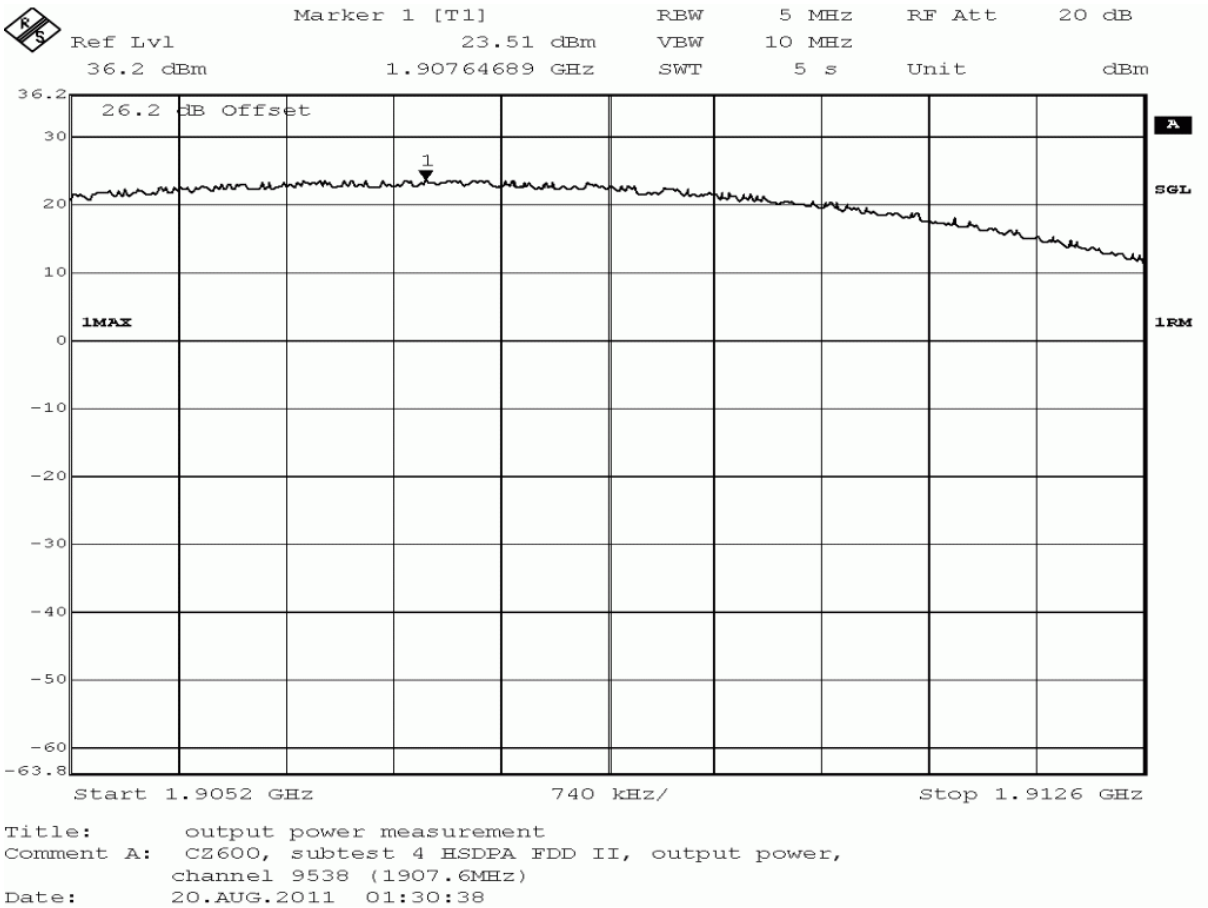

detector	trace	resolution bandwidth /kHz	conducted peak value /dBm	verdict
peak	maxhold	5000	31.23	passed
average	maxhold	5000	22.39	passed
rms	maxhold	5000	23.51	passed

no external antenna gain is specified, the verdict is valid
for external antenna gains equal or less than
1.77 dBi

Test: 24.1; Frequency Band = FDD2, Mode = HSUPA_subtest_1, Channel = 9262, Frequency = 1852.4MHz, Method = conducted

Result:	Passed
Setup No.:	B01_direct
Date of Test:	2011/08/20 2:14
Body:	FCC47CFRChIPART24PERSONAL COMMUNICATIONS SERVICES
Test Specification:	FCC part 2 and 24

Detailed Results:

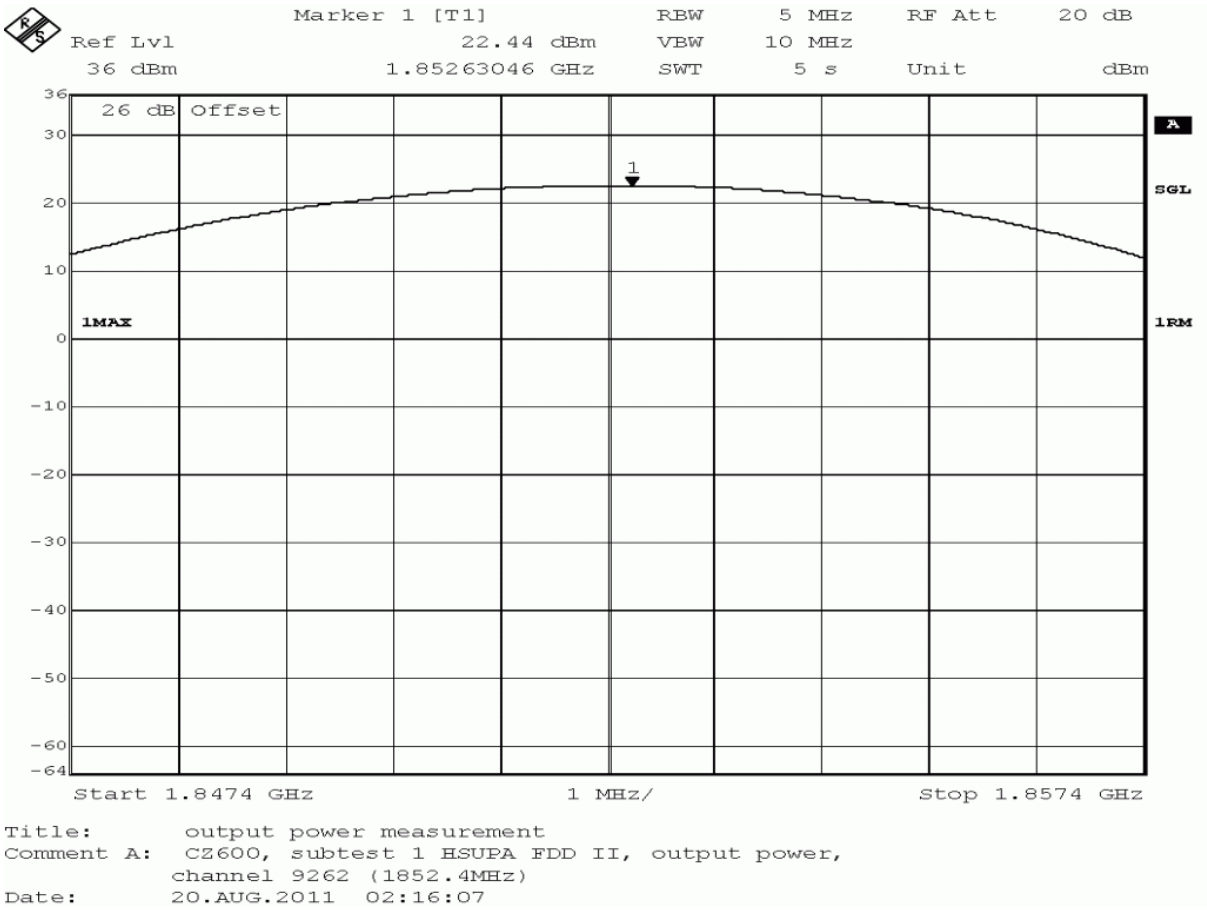

detector	trace	resolution bandwidth /kHz	conducted peak value /dBm	verdict
peak	maxhold	5000	29.87	passed
average	maxhold	5000	22.01	passed
rms	maxhold	5000	22.44	passed

no external antenna gain is specified, the verdict is valid
for external antenna gains equal or less than
10.56 dBi

Test: 24.1; Frequency Band = FDD2, Mode = HSUPA_subtest_1, Channel = 9400, Frequency = 1880MHz, Method = conducted

Result:	Passed
Setup No.:	B01_direct
Date of Test:	2011/08/20 2:08
Body:	FCC47CFRChIPART24PERSONAL COMMUNICATIONS SERVICES
Test Specification:	FCC part 2 and 24

Detailed Results:

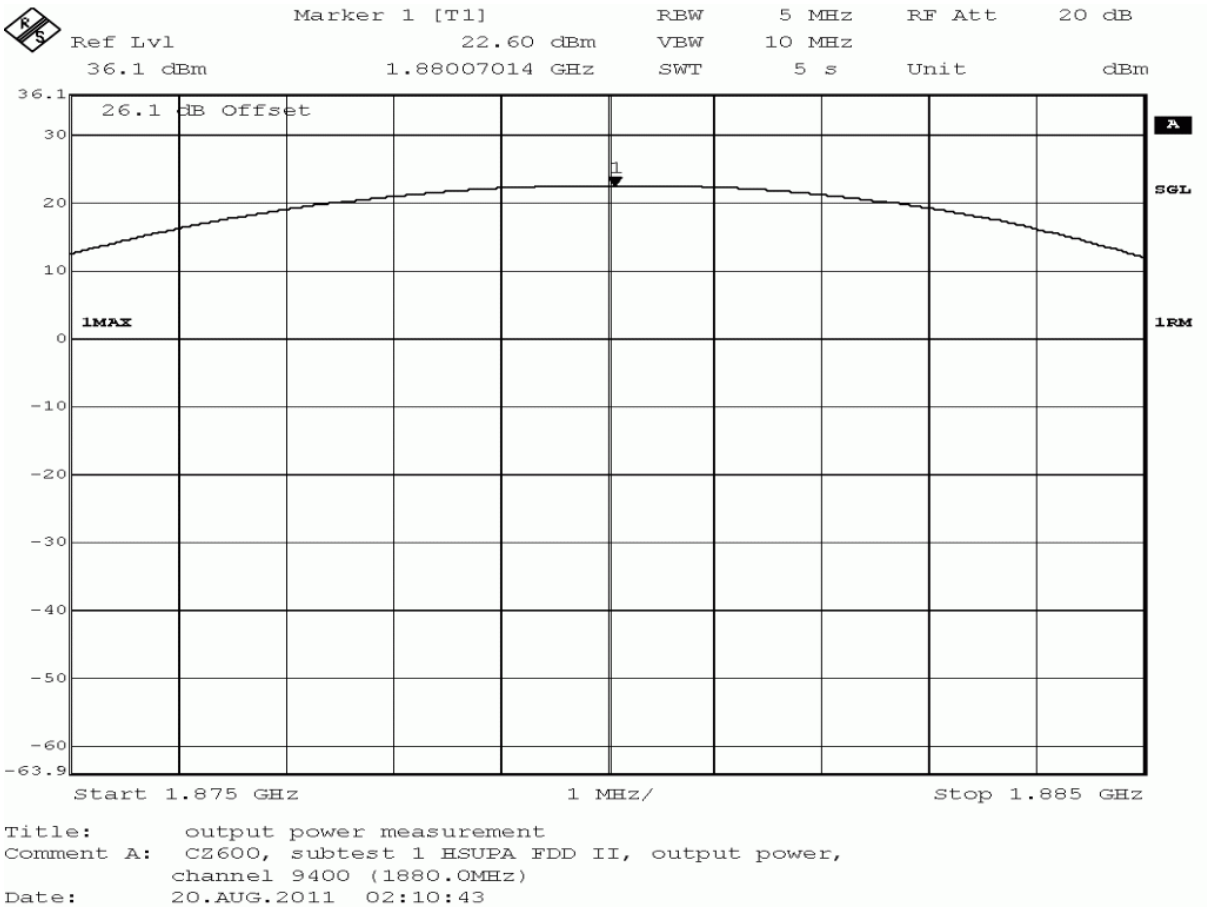

Title: output power measurement
Comment A: CZ600, subtest 1 HSUPA FDD II, output power, channel 9400 (1880.0MHz)
Date: 20.AUG.2011 02:10:43

detector	trace	resolution bandwidth /kHz	conducted peak value /dBm	verdict
peak	maxhold	5000	30.10	passed
average	maxhold	5000	22.26	passed
rms	maxhold	5000	22.60	passed

no external antenna gain is specified, the verdict is valid
for external antenna gains equal or less than
10.40 dBi

Test: 24.1; Frequency Band = FDD2, Mode = HSUPA_subtest_1, Channel = 9538, Frequency = 1907.6MHz, Method = conducted

Result:	Passed
Setup No.:	B01_direct
Date of Test:	2011/08/20 2:20
Body:	FCC47CFRChIPART24PERSONAL COMMUNICATIONS SERVICES
Test Specification:	FCC part 2 and 24

Detailed Results:

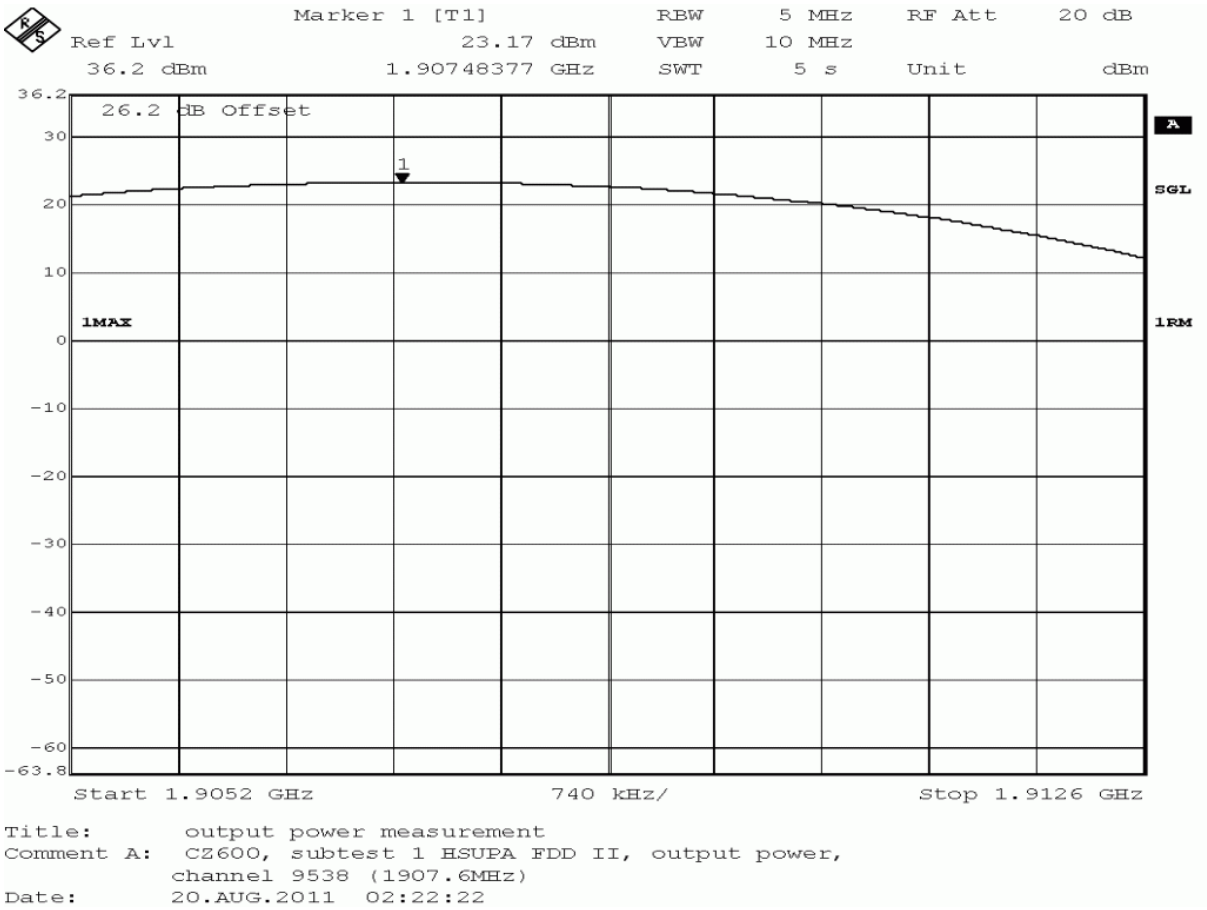

detector	trace	resolution bandwidth /kHz	conducted peak value /dBm	verdict
peak	maxhold	5000	30.33	passed
average	maxhold	5000	22.68	passed
rms	maxhold	5000	23.17	passed

no external antenna gain is specified, the verdict is valid
for external antenna gains equal or less than
10.32 dBi

Test: 24.1; Frequency Band = FDD2, Mode = HSUPA_subtest_2, Channel = 9262, Frequency = 1852.4MHz, Method = conducted

Result:	Passed
Setup No.:	B01_direct
Date of Test:	2011/08/20 2:32
Body:	FCC47CFRChIPART24PERSONAL COMMUNICATIONS SERVICES
Test Specification:	FCC part 2 and 24

Detailed Results:

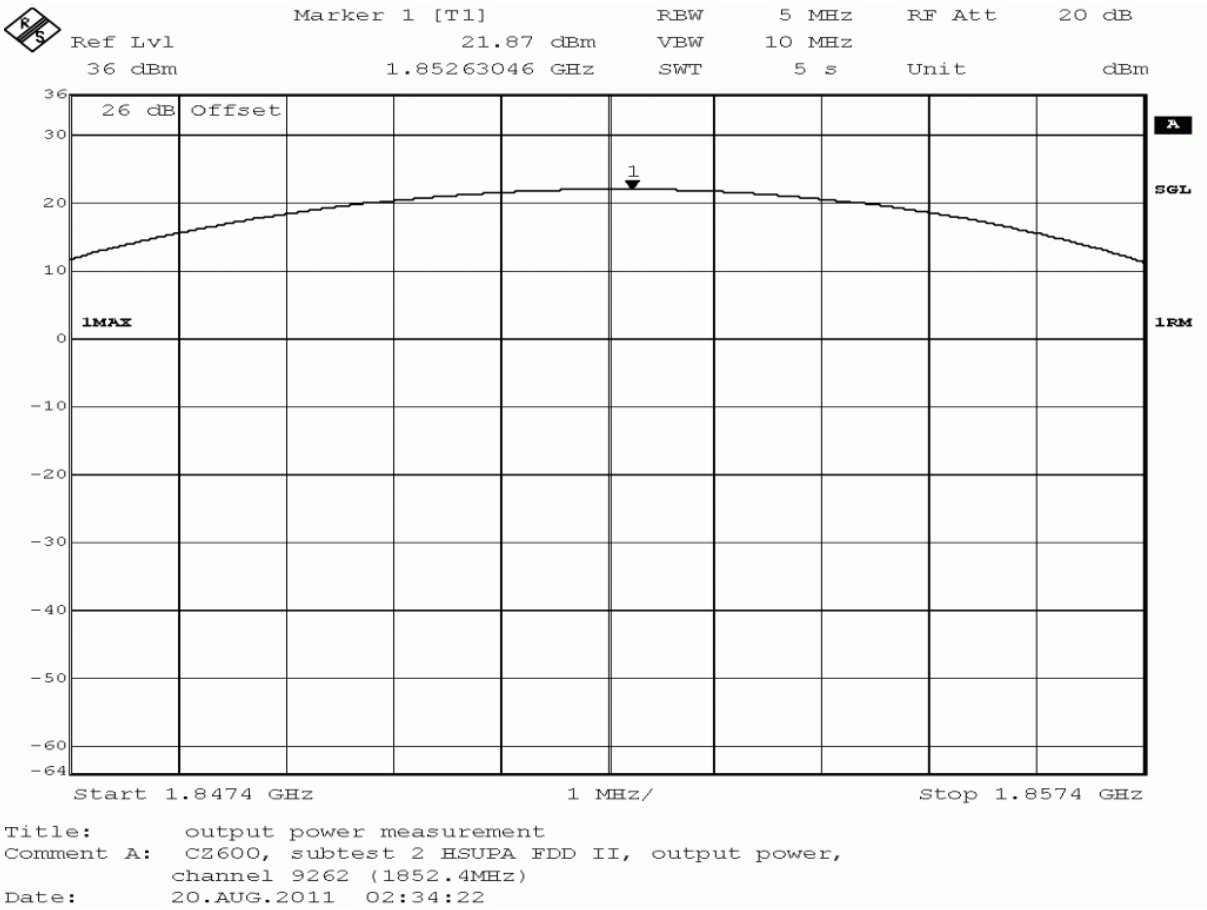

detector	trace	resolution bandwidth /kHz	conducted peak value /dBm	verdict
peak	maxhold	5000	30.75	passed
average	maxhold	5000	20.97	passed
rms	maxhold	5000	21.87	passed

no external antenna gain is specified, the verdict is valid
for external antenna gains equal or less than
11.13 dBi

Test: 24.1; Frequency Band = FDD2, Mode = HSUPA_subtest_2, Channel = 9400, Frequency = 1880MHz, Method = conducted

Result:	Passed
Setup No.:	B01_direct
Date of Test:	2011/08/20 2:31
Body:	FCC47CFRChIPART24PERSONAL COMMUNICATIONS SERVICES
Test Specification:	FCC part 2 and 24

Detailed Results:

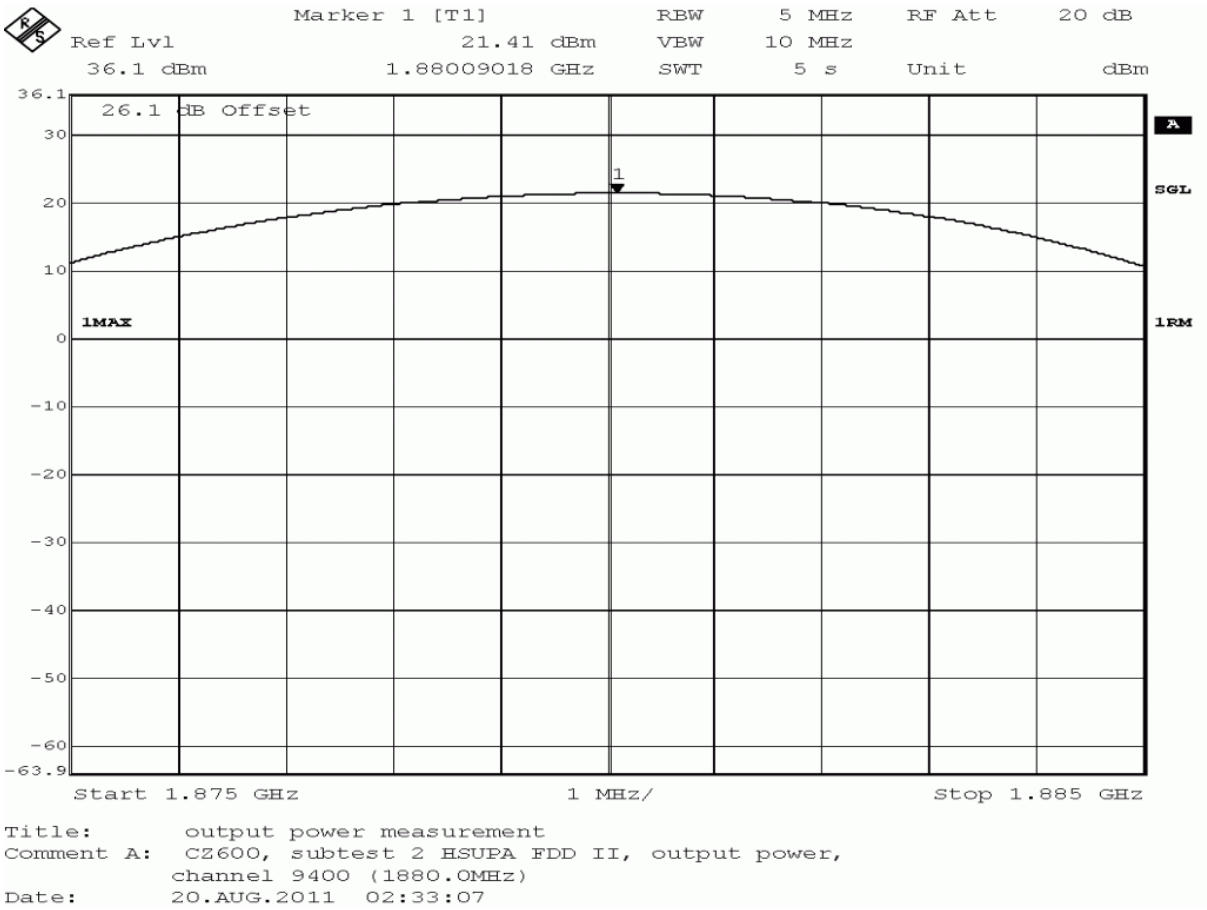

detector	trace	resolution bandwidth /kHz	conducted peak value /dBm	verdict
peak	maxhold	5000	29.70	passed
average	maxhold	5000	20.50	passed
rms	maxhold	5000	21.41	passed

no external antenna gain is specified, the verdict is valid
for external antenna gains equal or less than
11.59 dBi

Test: 24.1; Frequency Band = FDD2, Mode = HSUPA_subtest_2, Channel = 9538, Frequency = 1907.6MHz, Method = conducted

Result:	Passed
Setup No.:	B01_direct
Date of Test:	2011/08/20 2:34
Body:	FCC47CFRChIPART24PERSONAL COMMUNICATIONS SERVICES
Test Specification:	FCC part 2 and 24

Detailed Results:

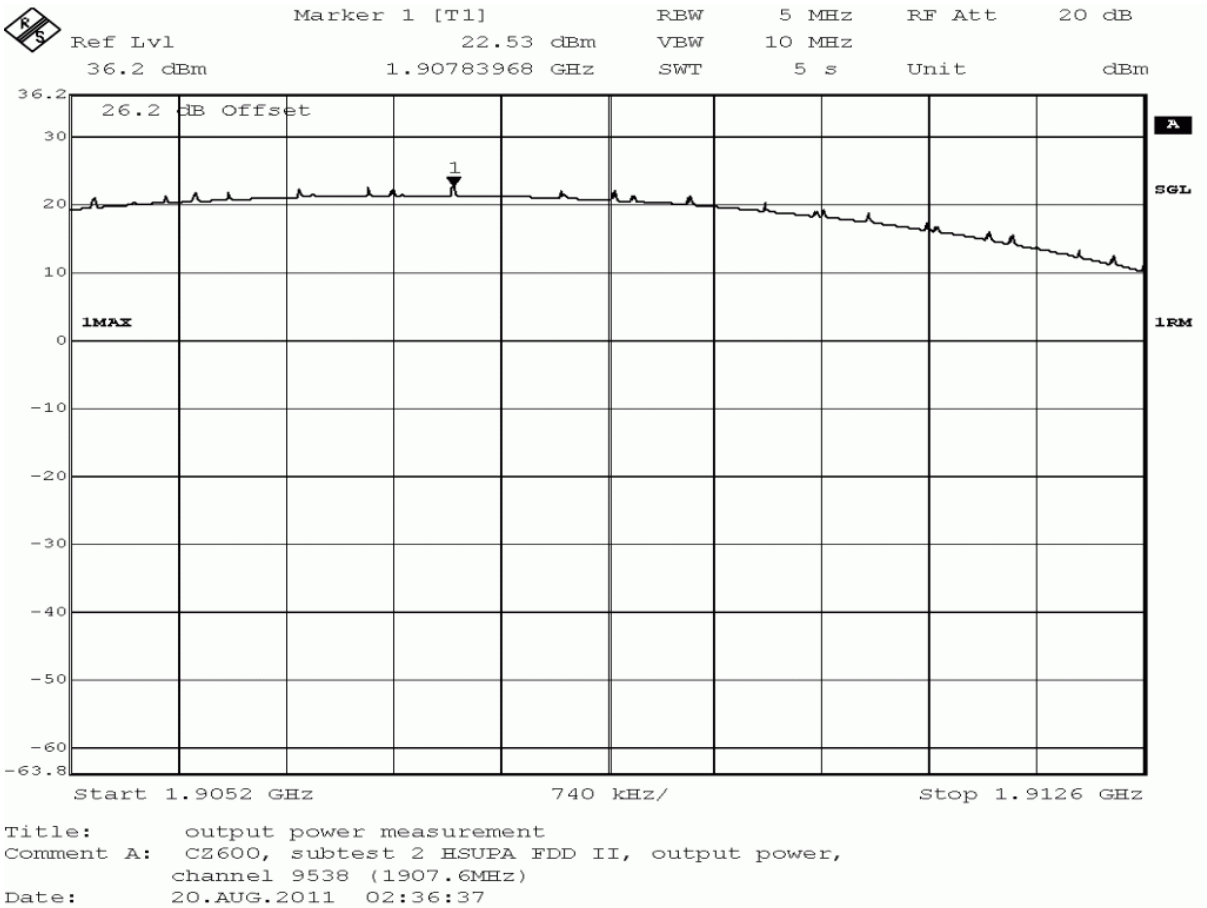

Title: output power measurement
Comment A: CZ600, subtest 2 HSUPA FDD II, output power, channel 9538 (1907.6MHz)
Date: 20.AUG.2011 02:36:37

detector	trace	resolution bandwidth /kHz	conducted peak value /dBm	verdict
peak	maxhold	5000	30.33	passed
average	maxhold	5000	21.36	passed
rms	maxhold	5000	22.53	passed

no external antenna gain is specified, the verdict is valid
for external antenna gains equal or less than
10.47 dBi

Test: 24.1; Frequency Band = FDD2, Mode = HSUPA_subtest_3, Channel = 9262, Frequency = 1852.4MHz, Method = conducted

Result:	Passed
Setup No.:	B01_direct
Date of Test:	2011/08/20 2:38
Body:	FCC47CFRChIPART24PERSONAL COMMUNICATIONS SERVICES
Test Specification:	FCC part 2 and 24

Detailed Results:

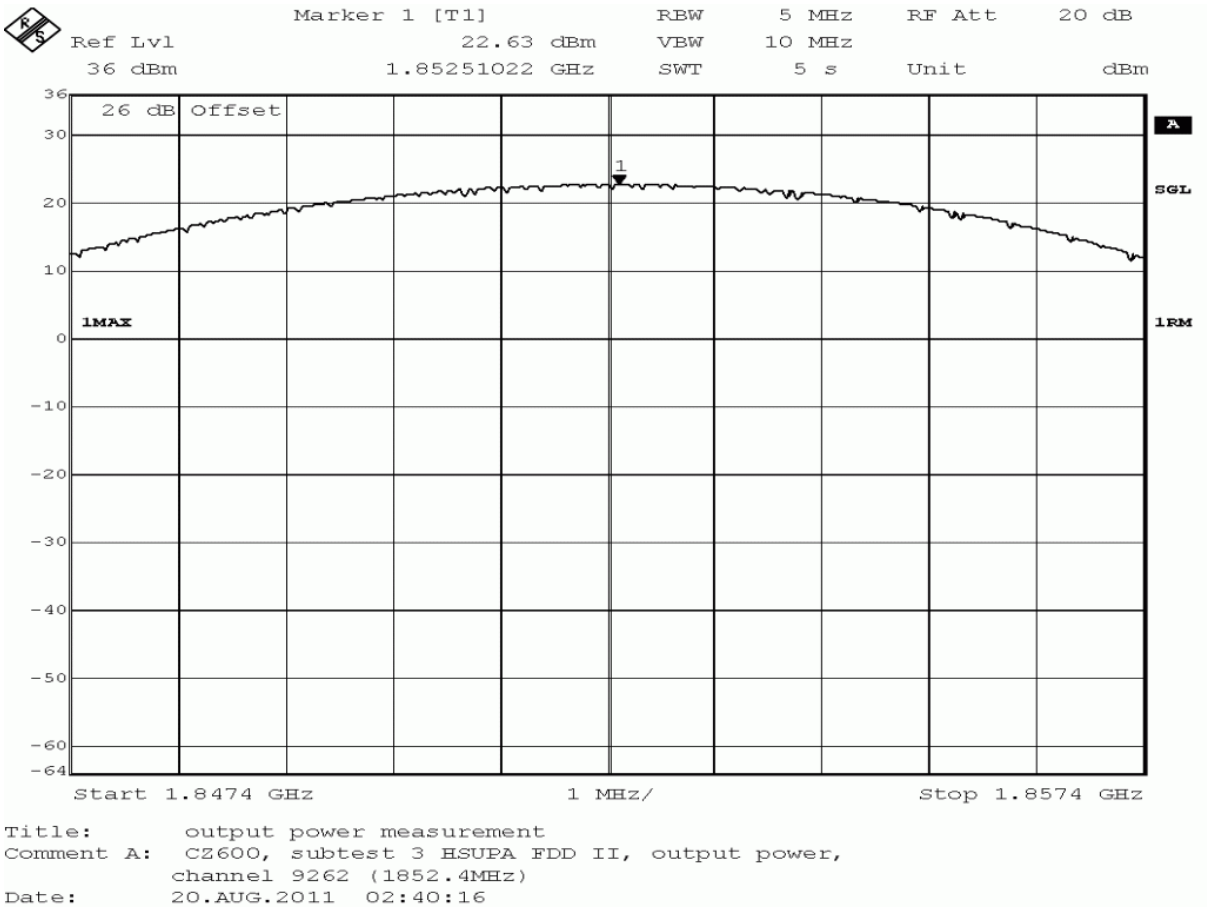

detector	trace	resolution bandwidth /kHz	conducted peak value /dBm	verdict
peak	maxhold	5000	31.17	passed
average	maxhold	5000	21.67	passed
rms	maxhold	5000	22.63	passed

no external antenna gain is specified, the verdict is valid
for external antenna gains equal or less than
1.83 dBi

Test: 24.1; Frequency Band = FDD2, Mode = HSUPA_subtest_3, Channel = 9400, Frequency = 1880MHz, Method = conducted

Result:	Passed
Setup No.:	B01_direct
Date of Test:	2011/08/20 2:37
Body:	FCC47CFRChIPART24PERSONAL COMMUNICATIONS SERVICES
Test Specification:	FCC part 2 and 24

Detailed Results:

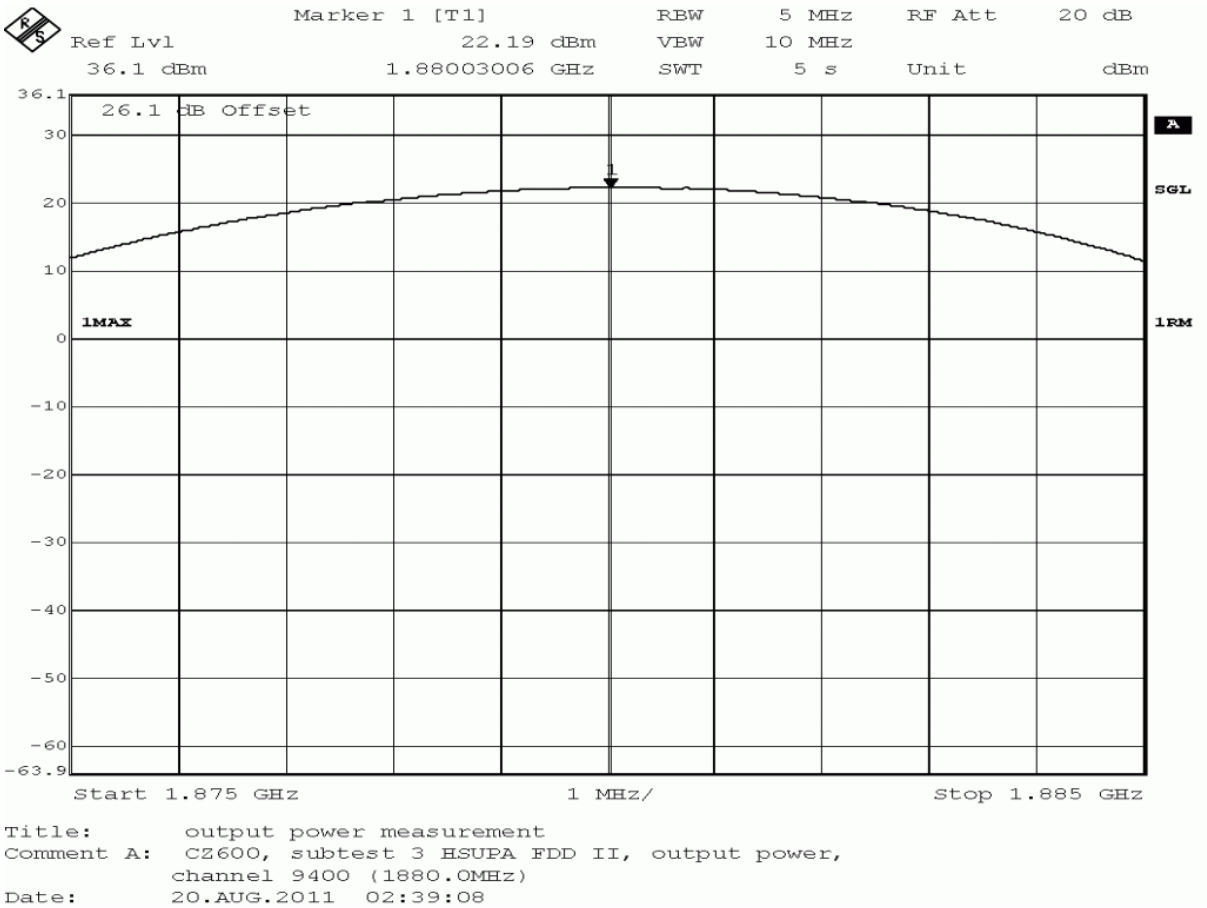

detector	trace	resolution bandwidth /kHz	conducted peak value /dBm	verdict
peak	maxhold	5000	30.60	passed
average	maxhold	5000	21.29	passed
rms	maxhold	5000	22.19	passed

no external antenna gain is specified, the verdict is valid
for external antenna gains equal or less than
10.81 dBi

Test: 24.1; Frequency Band = FDD2, Mode = HSUPA_subtest_3, Channel = 9538, Frequency = 1907.6MHz, Method = conducted

Result:	Passed
Setup No.:	B01_direct
Date of Test:	2011/08/20 2:39
Body:	FCC47CFRChIPART24PERSONAL COMMUNICATIONS SERVICES
Test Specification:	FCC part 2 and 24

Detailed Results:

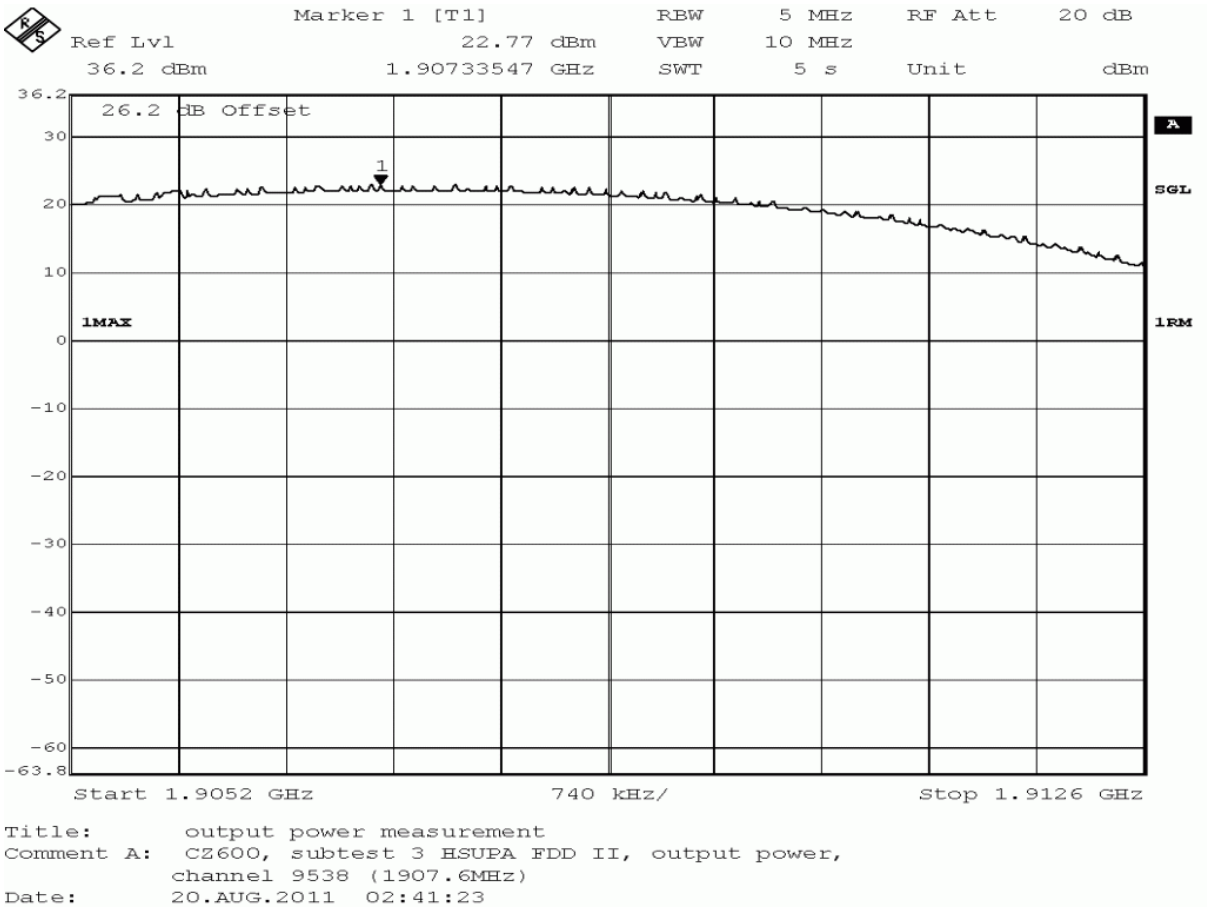

detector	trace	resolution bandwidth /kHz	conducted peak value /dBm	verdict
peak	maxhold	5000	30.70	passed
average	maxhold	5000	21.93	passed
rms	maxhold	5000	22.77	passed

no external antenna gain is specified, the verdict is valid
for external antenna gains equal or less than
10.23 dBi

Test: 24.1; Frequency Band = FDD2, Mode = HSUPA_subtest_4, Channel = 9262, Frequency = 1852.4MHz, Method = conducted

Result:	Passed
Setup No.:	B01_direct
Date of Test:	2011/08/20 2:42
Body:	FCC47CFRChIPART24PERSONAL COMMUNICATIONS SERVICES
Test Specification:	FCC part 2 and 24

Detailed Results:

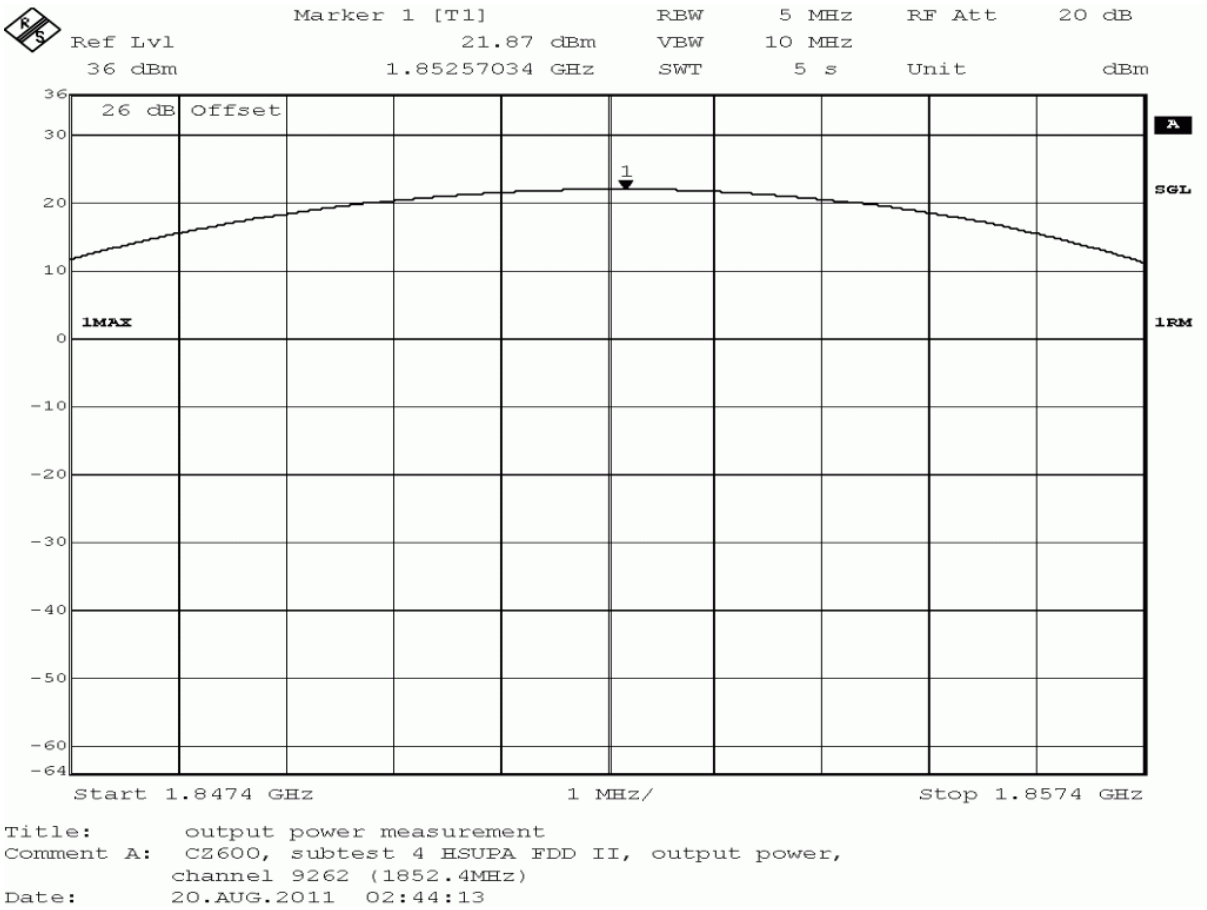

detector	trace	resolution bandwidth /kHz	conducted peak value /dBm	verdict
peak	maxhold	5000	30.00	passed
average	maxhold	5000	21.09	passed
rms	maxhold	5000	21.87	passed

no external antenna gain is specified, the verdict is valid
for external antenna gains equal or less than
11.13 dBi

Test: 24.1; Frequency Band = FDD2, Mode = HSUPA_subtest_4, Channel = 9400, Frequency = 1880MHz, Method = conducted

Result:	Passed
Setup No.:	B01_direct
Date of Test:	2011/08/20 2:41
Body:	FCC47CFRChIPART24PERSONAL COMMUNICATIONS SERVICES
Test Specification:	FCC part 2 and 24

Detailed Results:

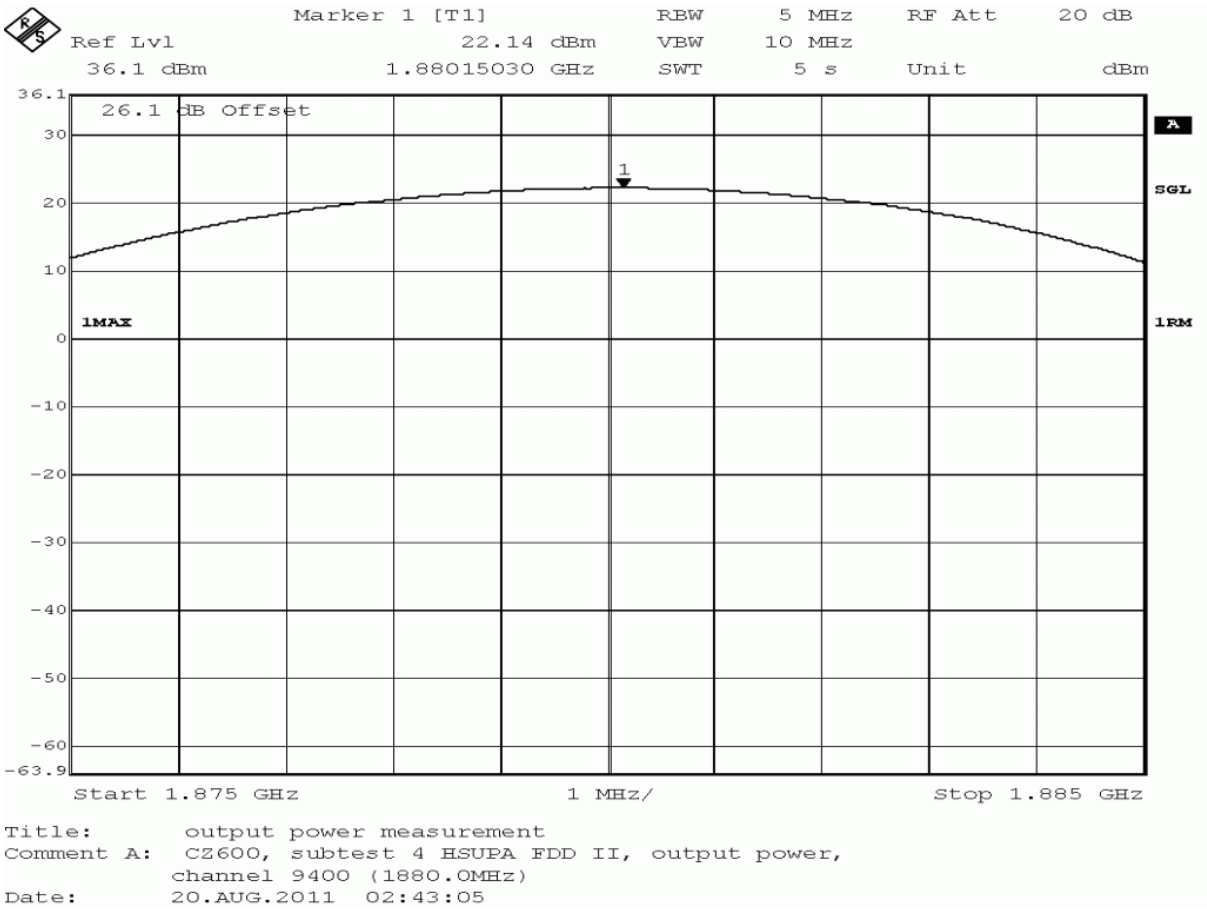

detector	trace	resolution bandwidth /kHz	conducted peak value /dBm	verdict
peak	maxhold	5000	30.31	passed
average	maxhold	5000	21.16	passed
rms	maxhold	5000	22.14	passed

no external antenna gain is specified, the verdict is valid
for external antenna gains equal or less than
10.86 dBi

Test: 24.1; Frequency Band = FDD2, Mode = HSUPA_subtest_4, Channel = 9538, Frequency = 1907.6MHz, Method = conducted

Result:	Passed
Setup No.:	B01_direct
Date of Test:	2011/08/20 2:43
Body:	FCC47CFRChIPART24PERSONAL COMMUNICATIONS SERVICES
Test Specification:	FCC part 2 and 24

Detailed Results:

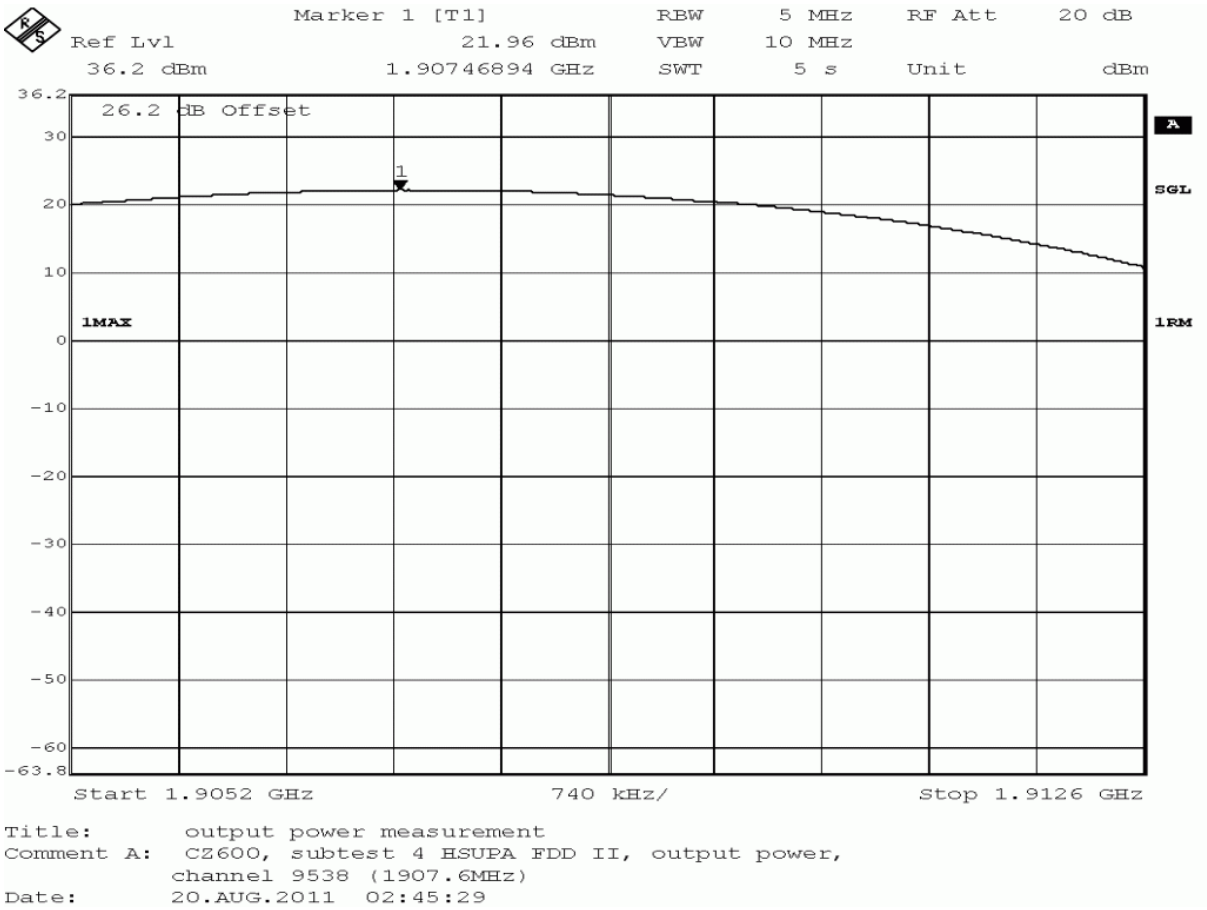

detector	trace	resolution bandwidth /kHz	conducted peak value /dBm	verdict
peak	maxhold	5000	30.20	passed
average	maxhold	5000	20.97	passed
rms	maxhold	5000	21.96	passed

no external antenna gain is specified, the verdict is valid
for external antenna gains equal or less than
11.04 dBi

Test: 24.1; Frequency Band = FDD2, Mode = HSUPA_subtest_5, Channel = 9262, Frequency = 1852.4MHz, Method = conducted

Result:	Passed
Setup No.:	B01_direct
Date of Test:	2011/08/20 2:46
Body:	FCC47CFRChIPART24PERSONAL COMMUNICATIONS SERVICES
Test Specification:	FCC part 2 and 24

Detailed Results:

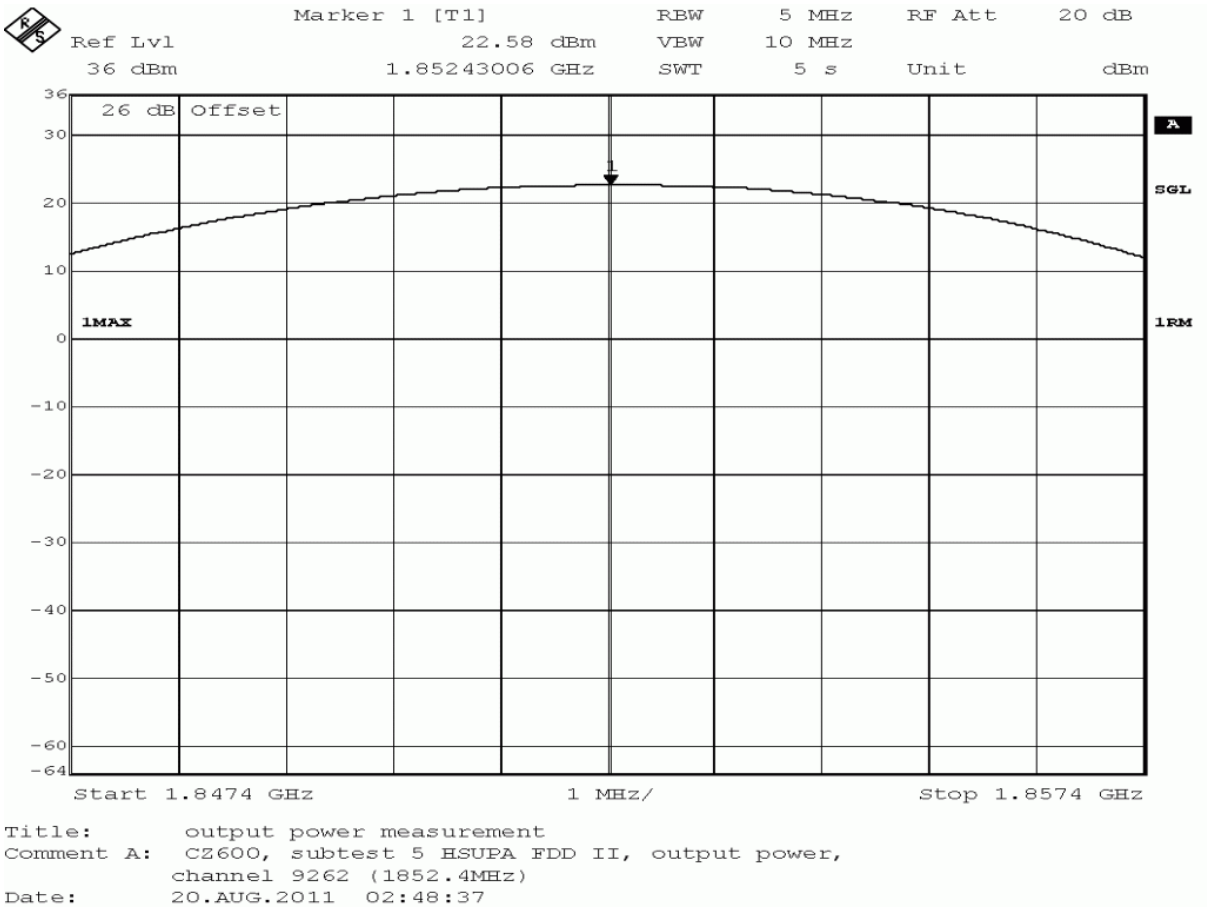

detector	trace	resolution bandwidth /kHz	conducted peak value /dBm	verdict
peak	maxhold	5000	29.60	passed
average	maxhold	5000	22.21	passed
rms	maxhold	5000	22.58	passed

no external antenna gain is specified, the verdict is valid
for external antenna gains equal or less than
10.42 dBi

Test: 24.1; Frequency Band = FDD2, Mode = HSUPA_subtest_5, Channel = 9400, Frequency = 1880MHz, Method = conducted

Result:	Passed
Setup No.:	B01_direct
Date of Test:	2011/08/20 2:45
Body:	FCC47CFRChIPART24PERSONAL COMMUNICATIONS SERVICES
Test Specification:	FCC part 2 and 24

Detailed Results:

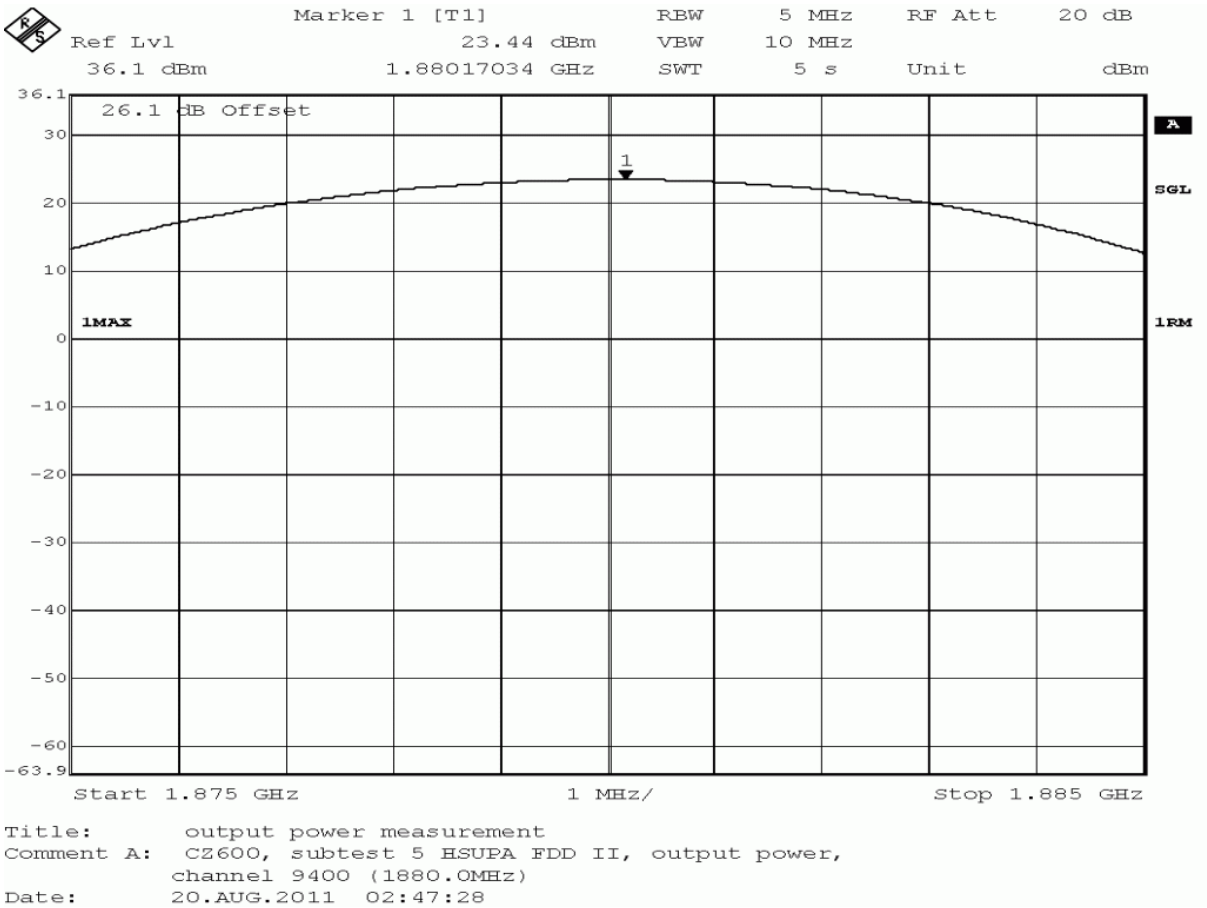

detector	trace	resolution bandwidth /kHz	conducted peak value /dBm	verdict
peak	maxhold	5000	30.31	passed
average	maxhold	5000	23.08	passed
rms	maxhold	5000	23.44	passed

no external antenna gain is specified, the verdict is valid
for external antenna gains equal or less than
2.69 dBi

Test: 24.1; Frequency Band = FDD2, Mode = HSUPA_subtest_5, Channel = 9538, Frequency = 1907.6MHz, Method = conducted

Result:	Passed
Setup No.:	B01_direct
Date of Test:	2011/08/20 2:47
Body:	FCC47CFRChIPART24PERSONAL COMMUNICATIONS SERVICES
Test Specification:	FCC part 2 and 24

Detailed Results:

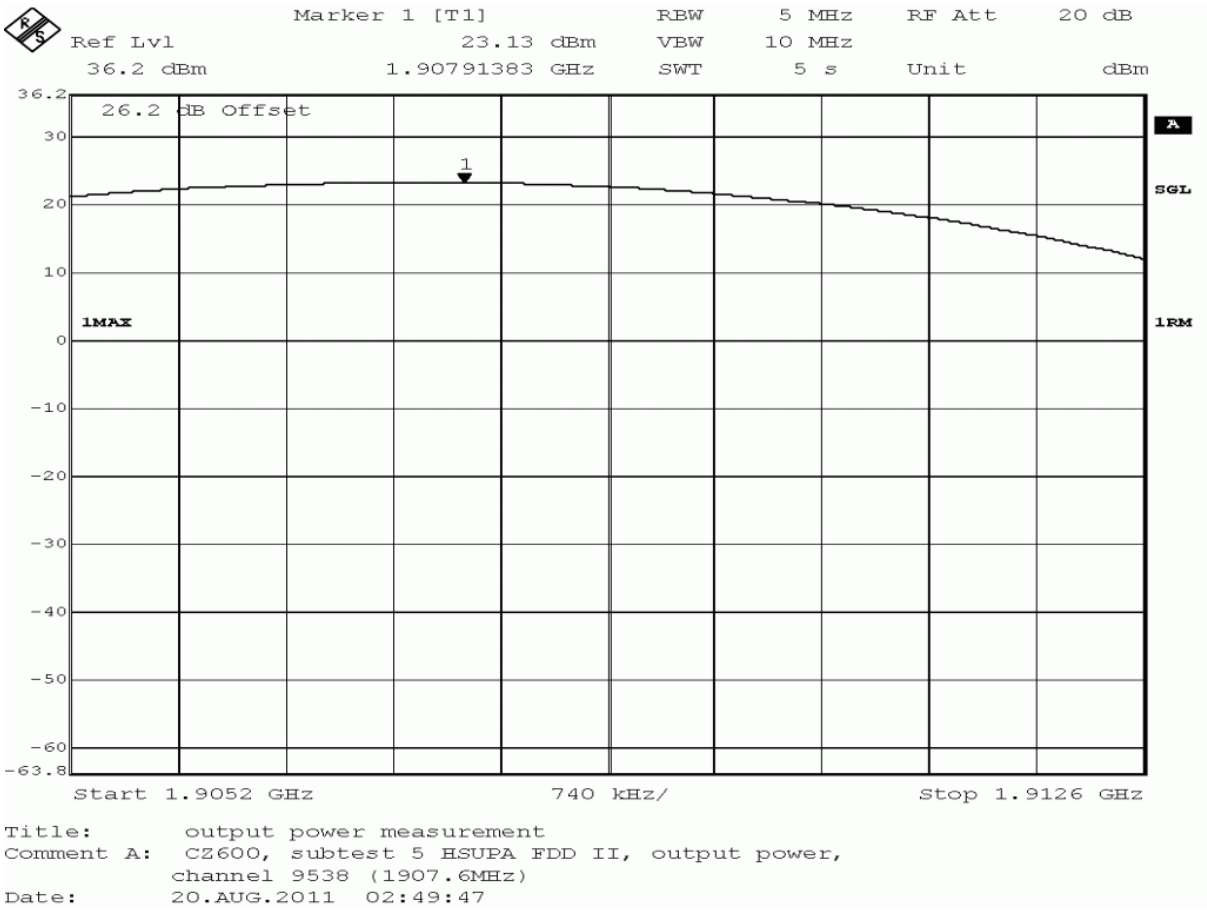

detector	trace	resolution bandwidth /kHz	conducted peak value /dBm	verdict
peak	maxhold	5000	30.07	passed
average	maxhold	5000	22.76	passed
rms	maxhold	5000	23.13	passed

no external antenna gain is specified, the verdict is valid
for external antenna gains equal or less than
10.24 dBi

Test: 24.1; Frequency Band = FDD2, Mode = W-CDMA, Channel = 9262, Frequency = 1852.4MHz, Method = conducted

Result:	Passed
Setup No.:	B01_direct
Date of Test:	2011/08/20 1:38
Body:	FCC47CFRChIPART24PERSONAL COMMUNICATIONS SERVICES
Test Specification:	FCC part 2 and 24

Detailed Results:

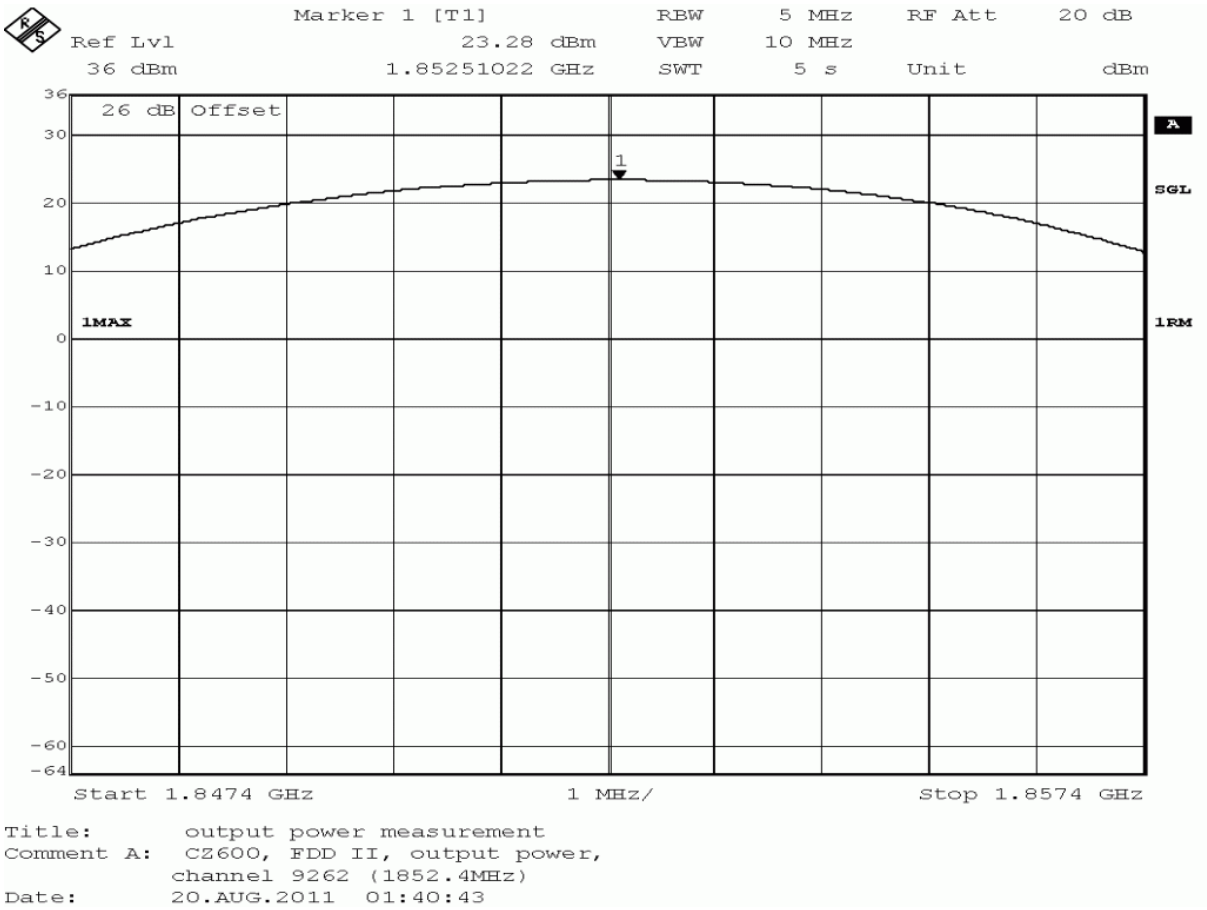

detector	trace	resolution bandwidth /kHz	conducted peak value /dBm	verdict
peak	maxhold	5000	28.82	passed
average	maxhold	5000	23.06	passed
rms	maxhold	5000	23.28	passed

no external antenna gain is specified, the verdict is valid
for external antenna gains equal or less than
4.18 dBi

Test: 24.1; Frequency Band = FDD2, Mode = W-CDMA, Channel = 9400, Frequency = 1880MHz, Method = conducted

Result:	Passed
Setup No.:	B01_direct
Date of Test:	2011/08/20 1:39
Body:	FCC47CFRChIPART24PERSONAL COMMUNICATIONS SERVICES
Test Specification:	FCC part 2 and 24

Detailed Results:

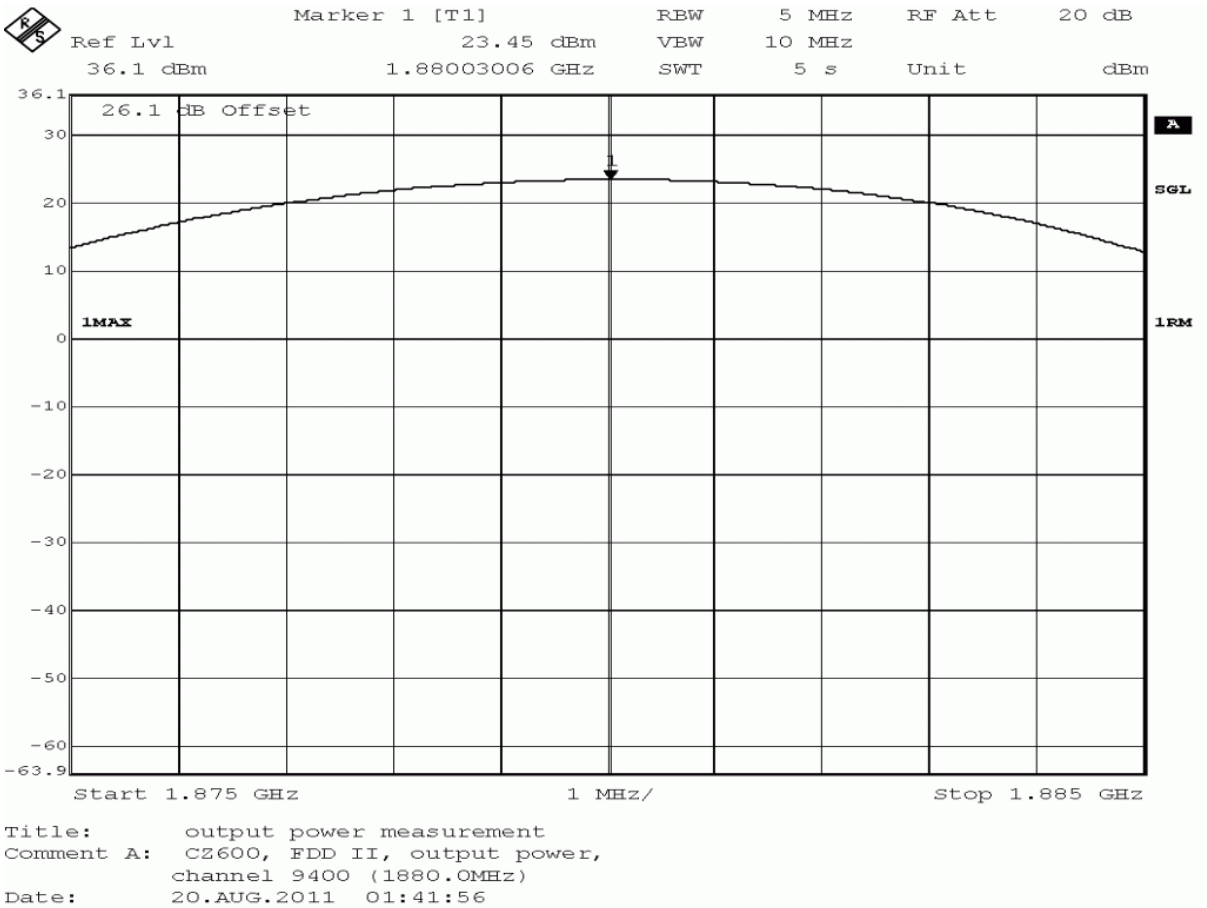

Title: output power measurement
Comment A: CZ600, FDD II, output power, channel 9400 (1880.0MHz)
Date: 20.AUG.2011 01:41:56

detector	trace	resolution bandwidth /kHz	conducted peak value /dBm	verdict
peak	maxhold	5000	28.92	passed
average	maxhold	5000	23.22	passed
rms	maxhold	5000	23.45	passed

no external antenna gain is specified, the verdict is valid
for external antenna gains equal or less than
4.08 dBi

Test: 24.1; Frequency Band = FDD2, Mode = W-CDMA, Channel = 9538, Frequency = 1907.6MHz, Method = conducted

Result:	Passed
Setup No.:	B01_direct
Date of Test:	2011/08/20 1:48
Body:	FCC47CFRChIPART24PERSONAL COMMUNICATIONS SERVICES
Test Specification:	FCC part 2 and 24

Detailed Results:

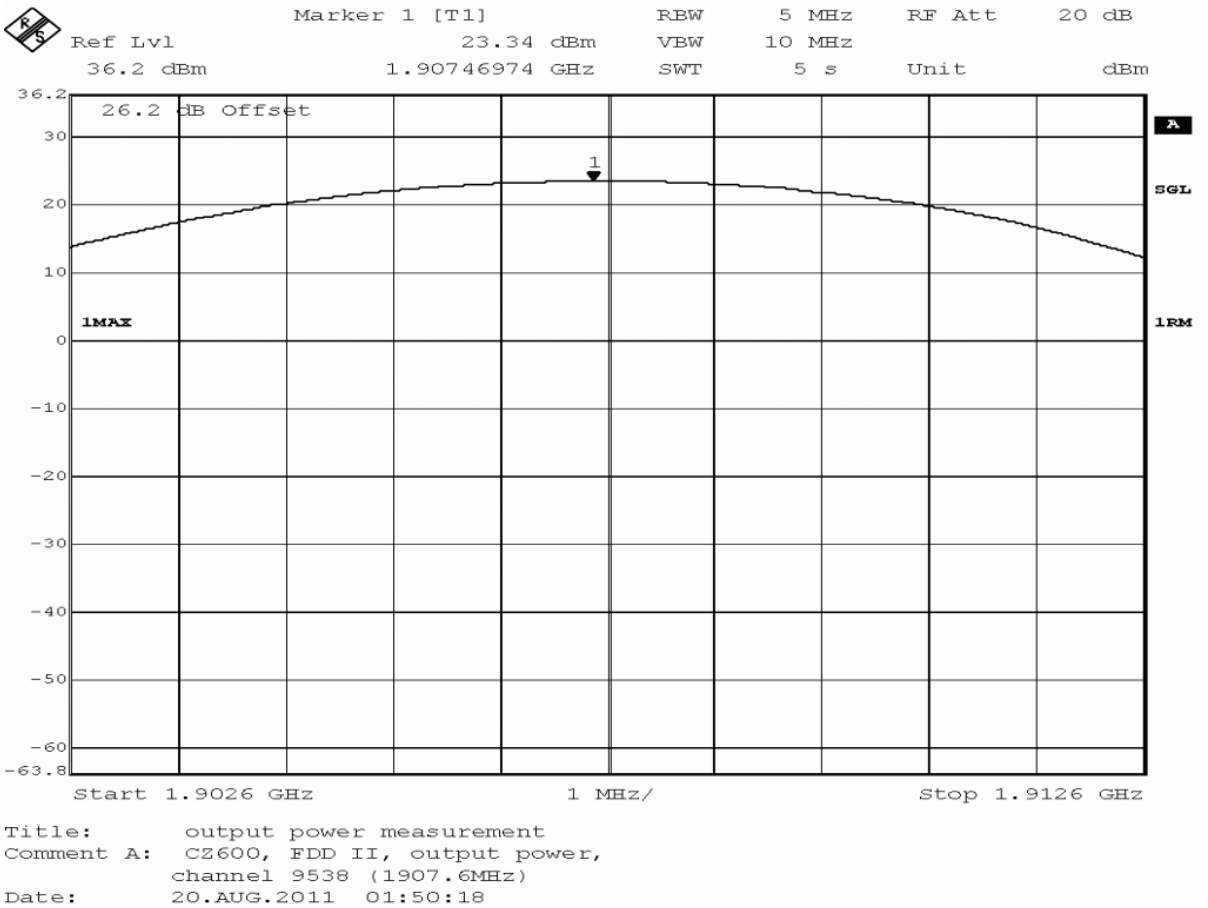

detector	trace	resolution bandwidth /kHz	conducted peak value /dBm	verdict
peak	maxhold	5000	28.77	passed
average	maxhold	5000	23.00	passed
rms	maxhold	5000	23.34	passed

no external antenna gain is specified, the verdict is valid
for external antenna gains equal or less than
10.00 dBi

3.5.2 24.2 Frequency stability §2.1055, §24.235

Test: 24.2; Frequency Band = 1900, Mode = EDGE, Channel = 661, Frequency = 1880.0MHz

Result:	Passed
Setup No.:	B01_RF1
Date of Test:	2011/08/19 9:01
Body:	FCC47CFRChIPART24PERSONAL COMMUNICATIONS SERVICES
Test Specification:	FCC part 2 and 24

Detailed Results:

FCC part 24 frequency stability			
EDGE 1900 TCH 661			
		Normal Voltage / V	
		4.2	
Temp. °C	Duration min	Freq. error Average (Hz)	Freq. error Max. (Hz)
-30	0	44	54
-30	5	61	70
-30	10	58	67
-20	0	71	79
-20	5	58	67
-20	10	62	69
-10	0	19	27
-10	5	72	80
-10	10	64	73
0	0	30	33
0	5	22	26
0	10	12	22
10	0	12	34
10	5	-1	-9
10	10	32	41
30	0	-21	-37
30	5	30	39
30	10	46	54
40	0	4	112
40	5	10	114
40	10	20	28
50	0	-20	-28
50	5	42	52
50	10	40	49
Remark	none		

		Minimum Voltage / V		Normal Voltage / V		Maximum Voltage / V	
		85%=3.3		100%=4.2		115%=x.x	
Temp. °C	Duration min	Freq. error Average (Hz)	Freq. error Max. (Hz)	Freq. error Average (Hz)	Freq. error Max. (Hz)	Freq. error Average (Hz)	Freq. error Max. (Hz)
20	0	-3	-26	-47	-56	-	-
20	5	34	55	-41	-46	-	-
20	10	7	46	-39	-44	-	-
Remark	The EUT was not able to reach (115% of normal voltage)						

Test: 24.2; Frequency Band = 1900, Mode = GSM, Channel = 661, Frequency = 1880.0MHz

Result: Passed

Setup No.: B01_RF1

Date of Test: 2011/08/19 9:00

Body: FCC47CFRChIPART24PERSONAL COMMUNICATIONS SERVICES

Test Specification: FCC part 2 and 24

Detailed Results:

FCC part 24 frequency stability

GSM 1900 TCH 661

		Normal Voltage / V	
		4.2	
Temp. °C	Duration min	Freq. error Average (Hz)	Freq. error Max. (Hz)
-30	0	65	86
-30	5	42	55
-30	10	19	25
-20	0	53	63
-20	5	27	32
-20	10	32	38
-10	0	44	50
-10	5	77	80
-10	10	56	62
0	0	33	41
0	5	28	30
0	10	14	28
10	0	28	37
10	5	12	19
10	10	34	39
30	0	-18	-27
30	5	8	15
30	10	9	26
40	0	-10	-18
40	5	11	17
40	10	18	28
50	0	-17	-26
50	5	6	12
50	10	4	9
Remark	none		

		Minimum Voltage / V		Normal Voltage / V		Maximum Voltage / V	
		85%=3.3		100%=4.2		115%=x.x	
Temp. °C	Duration min	Freq. error Average (Hz)	Freq. error Max. (Hz)	Freq. error Average (Hz)	Freq. error Max. (Hz)	Freq. error Average (Hz)	Freq. error Max. (Hz)
20	0	-6	-15	-10	-30	-	-
20	5	23	32	-7	-13	-	-
20	10	15	22	8	13	-	-
Remark	The EUT was not able to reach (115% of normal voltage)						

Test: 24.2; Frequency Band = FDD2, Mode = HSDPA, Channel = 9400, Frequency = 1880MHz

Result: Passed

Setup No.: B01_RF1

Date of Test: 2011/08/19 9:02

Body: FCC47CFRChIPART24PERSONAL COMMUNICATIONS SERVICES

Test Specification: FCC part 2 and 24

Detailed Results:

FCC part 24 frequency stability

UTRA FDD II HSDPA UARFCN 9400

		Normal Voltage / V	
		4.2	
Temp. °C	Duration min	Freq. error Average	Freq. error Max. (Hz)
-30	0	1	-18
-30	5	-5	-15
-30	10	0	-17
-20	0	-7	-25
-20	5	3	24
-20	10	-3	16
-10	0	7	25
-10	5	6	24
-10	10	1	-16
0	0	5	18
0	5	7	22
0	10	4	16
10	0	10	28
10	5	0	-19
10	10	0	16
30	0	-6	-18
30	5	-7	-21
30	10	-9	-14
40	0	-2	-14
40	5	-5	-21
40	10	-9	-26
50	0	4	-14
50	5	-1	-38
50	10	-3	-29
Remark	none		

		Minimum Voltage / V		Normal Voltage / V		Maximum Voltage / V	
		85%=3.3		100%=4.2		115%=x.x	
Temp. °C	Duration min	Freq. error Average	Freq. error Max. (Hz)	Freq. error Average	Freq. error Max. (Hz)	Freq. error Average	Freq. error Max. (Hz)
20	0	8	28	7	29	-	-
20	5	-8	-29	6	26	-	-
20	10	0	22	2	-17	-	-
Remark	The EUT was not able to reach (115% of normal voltage)						

Test: 24.2; Frequency Band = FDD2, Mode = HSUPA, Channel = 9400, Frequency = 1880MHz

Result: Passed

Setup No.: B01_RF1

Date of Test: 2011/08/19 9:02

Body: FCC47CFRChIPART24PERSONAL COMMUNICATIONS SERVICES

Test Specification: FCC part 2 and 24

Detailed Results:

FCC part 24 frequency stability

UTRA FDD II HSUPA UARFCN 9400

		Normal Voltage / V	
		4.2	
Temp. °C	Duration min	Freq. error Average	Freq. error Max. (Hz)
-30	0	-9	-22
-30	5	4	28
-30	10	-4	-10
-20	0	-3	21
-20	5	2	30
-20	10	-6	-9
-10	0	0	22
-10	5	-4	-8
-10	10	-3	-8
0	0	7	21
0	5	3	20
0	10	6	13
10	0	3	19
10	5	-1	-14
10	10	-4	-14
30	0	3	22
30	5	1	26
30	10	-6	-26
40	0	0	-24
40	5	-4	15
40	10	-1	14
50	0	5	22
50	5	-1	-17
50	10	2	-26
Remark	none		

		Minimum Voltage / V		Normal Voltage / V		Maximum Voltage / V	
		85%=3.3		100%=4.2		115%=x.x	
Temp. °C	Duration min	Freq. error Average	Freq. error Max. (Hz)	Freq. error Average	Freq. error Max. (Hz)	Freq. error Average	Freq. error Max. (Hz)
20	0	2	-23	0	-18	-	-
20	5	5	20	-2	14	-	-
20	10	-1	13	1	-13	-	-
Remark	The EUT was not able to reach (115% of normal voltage)						

Test: 24.2; Frequency Band = FDD2, Mode = W-CDMA, Channel = 9400, Frequency = 1880MHz

Result: Passed

Setup No.: B01_RF1

Date of Test: 2011/08/19 9:01

Body: FCC47CFRChIPART24PERSONAL COMMUNICATIONS SERVICES

Test Specification: FCC part 2 and 24

Detailed Results:

FCC part 24 frequency stability

UTRA FDD II UARFCN 9400

		Normal Voltage / V	
		4.2	
Temp. °C	Duration min	Freq. error Average	Freq. error Max. (Hz)
-30	0	-3	25
-30	5	-1	30
-30	10	0	27
-20	0	1	-37
-20	5	1	-29
-20	10	-1	32
-10	0	-6	-28
-10	5	-1	33
-10	10	-1	-23
0	0	7	22
0	5	6	20
0	10	2	11
10	0	-3	-17
10	5	3	23
10	10	0	14
30	0	0	-14
30	5	13	21
30	10	5	19
40	0	0	-18
40	5	-3	27
40	10	2	23
50	0	-2	-19
50	5	3	21
50	10	-1	22
Remark	none		

		Minimum Voltage / V		Normal Voltage / V		Maximum Voltage / V	
		85%=3.3		100%=4.2		115%=x.x	
Temp. °C	Duration min	Freq. error Average	Freq. error Max. (Hz)	Freq. error Average	Freq. error Max. (Hz)	Freq. error Average	Freq. error Max. (Hz)
20	0	-7	-16	4	25	-	-
20	5	0	-22	-5	28	-	-
20	10	-7	-30	-3	-21	-	-
Remark	The EUT was not able to reach (115% of normal voltage)						

3.5.3 24.3 Spurious emissions at antenna terminals §2.1051, §24.238

Test: 24.3; Frequency Band = 1900, Mode = EDGE, Channel = 512, Frequency = 1850.2MHz

Result:	Passed
Setup No.:	B01_direct
Date of Test:	2011/08/19 19:45
Body:	FCC47CFRChIPART24PERSONAL COMMUNICATIONS SERVICES
Test Specification:	FCC part 2 and 24

Detailed Results:

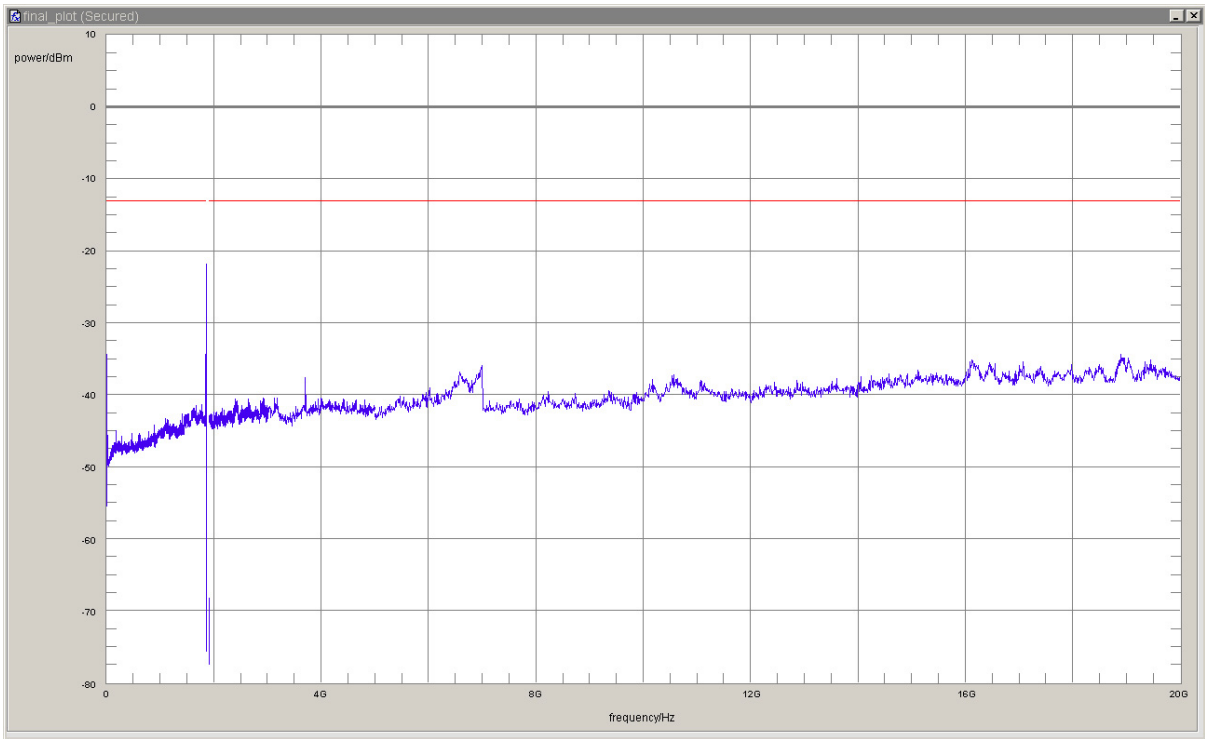

detector	trace	resolution bandwidth /kHz	frequency /MHz	peak value /dBm	margin to limit /dB	limit /dBm	verdict
peak	maxhold	100	1848.30	-32.4	19.4	-13.0	passed
peak	maxhold	100	1848.57	-30.6	17.6	-13.0	passed
peak	maxhold	100	1848.60	-31.2	18.2	-13.0	passed
peak	maxhold	100	1848.68	-31.3	18.3	-13.0	passed
peak	maxhold	100	1848.71	-32.1	19.1	-13.0	passed
peak	maxhold	100	1848.86	-31.1	18.1	-13.0	passed
peak	maxhold	100	1848.89	-31.1	18.1	-13.0	passed
peak	maxhold	100	1848.93	-32.8	19.8	-13.0	passed
peak	maxhold	3	1849.9479	-24.8	11.8	-13.0	passed
peak	maxhold	3	1849.9760	-22.4	9.4	-13.0	passed
peak	maxhold	3	1849.9900	-21.8	8.8	-13.0	passed

no further values have been found with a margin of less than 20 dB

Test: 24.3; Frequency Band = 1900, Mode = EDGE, Channel = 661, Frequency = 1880.0MHz

Result:	Passed
Setup No.:	B01_direct
Date of Test:	2011/08/19 19:38
Body:	FCC47CFRChIPART24PERSONAL COMMUNICATIONS SERVICES
Test Specification:	FCC part 2 and 24

Detailed Results:

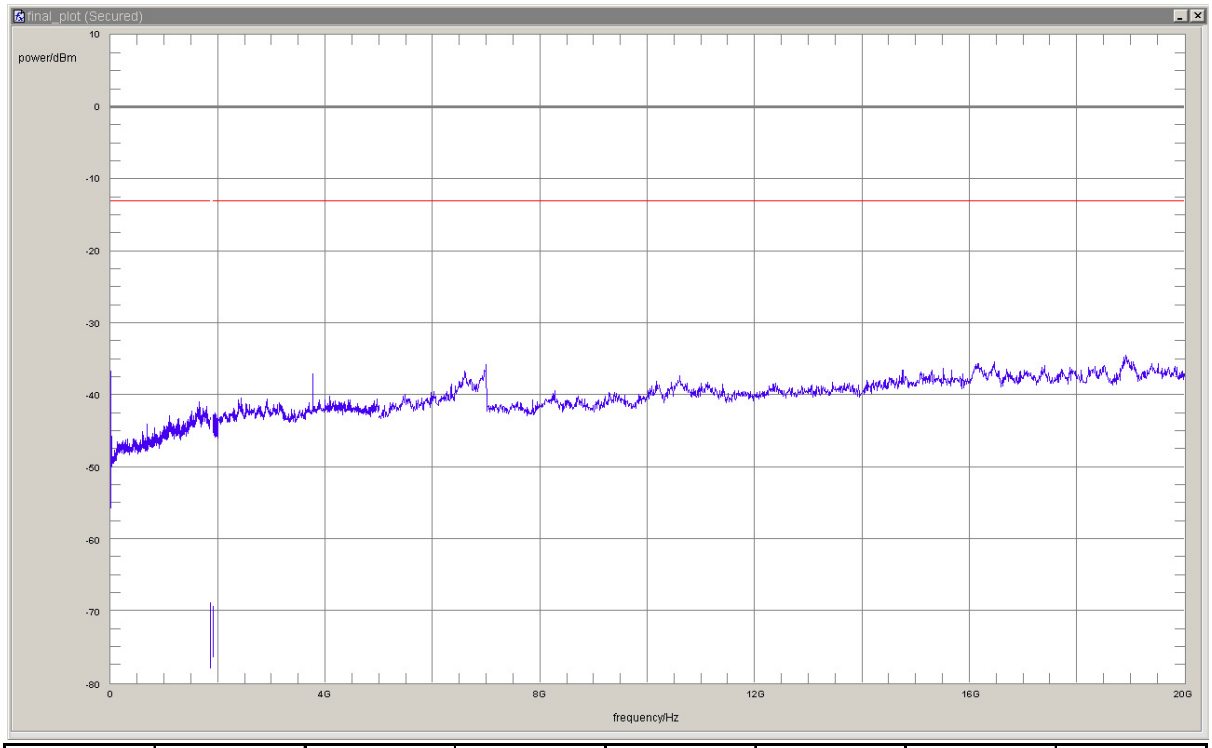

detector	trace	resolution bandwidth /kHz	frequency /MHz	peak value /dBm	margin to limit /dB	limit /dBm	verdict
peak	maxhold	1000	18907.816	-34.48	21.48	-13	passed

no further values have been found with a margin of less than 20 dB

Test: 24.3; Frequency Band = 1900, Mode = EDGE, Channel = 810, Frequency = 1909.8MHz

Result:	Passed
Setup No.:	B01_direct
Date of Test:	2011/08/20 2:00
Body:	FCC47CFRChIPART24PERSONAL COMMUNICATIONS SERVICES
Test Specification:	FCC part 2 and 24

Detailed Results:

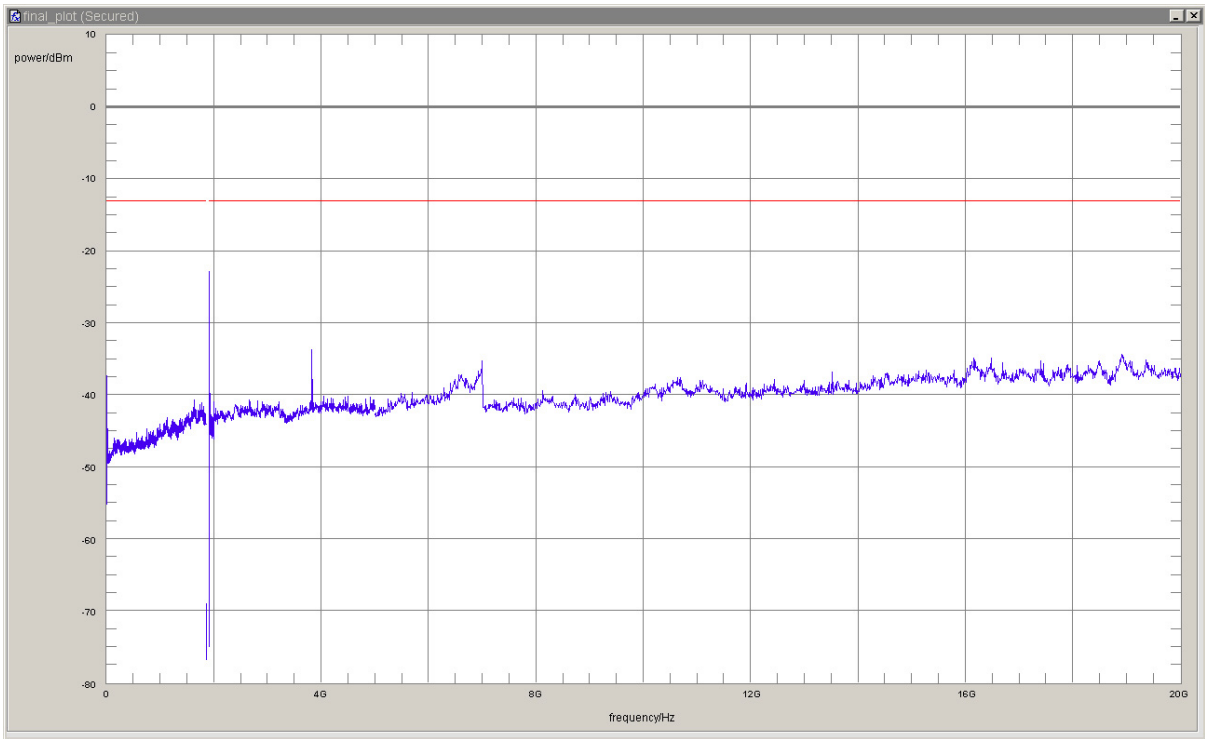

detector	trace	resolution bandwidth /kHz	frequency /MHz	peak value /dBm	margin to limit /dB	limit /dBm	verdict
peak	maxhold	3	1910.0000	-23.4	10.4	-13.0	passed
peak	maxhold	3	1910.0180	-22.9	9.9	-13.0	passed
peak	maxhold	3	1910.0421	-26.0	13.0	-13.0	passed
peak	maxhold	3	1910.0621	-31.3	18.3	-13.0	passed
peak	maxhold	3	1910.0681	-29.9	16.9	-13.0	passed
peak	maxhold	3	1910.0822	-31.2	18.2	-13.0	passed
peak	maxhold	100	1911.05	-32.8	19.8	-13.0	passed
peak	maxhold	100	1911.23	-32.5	19.5	-13.0	passed
peak	maxhold	100	1911.32	-32.2	19.2	-13.0	passed
peak	maxhold	100	1911.36	-31.3	18.3	-13.0	passed
peak	maxhold	100	1911.40	-31.5	18.5	-13.0	passed
peak	maxhold	100	1911.43	-27.7	14.7	-13.0	passed
peak	maxhold	100	1911.47	-30.5	17.5	-13.0	passed
peak	maxhold	100	1911.51	-32.8	19.8	-13.0	passed
peak	maxhold	100	1911.54	-32.9	19.9	-13.0	passed
peak	maxhold	100	1911.79	-31.4	18.4	-13.0	passed
peak	maxhold	100	1911.83	-31.9	18.9	-13.0	passed
peak	maxhold	100	1911.96	-31.7	18.7	-13.0	passed
peak	maxhold	100	1911.99	-31.8	18.8	-13.0	passed
peak	maxhold	100	1912.14	-32.5	19.5	-13.0	passed

no further values have been found with a margin of less than 20 dB

Test: 24.3; Frequency Band = 1900, Mode = GSM, Channel = 512, Frequency = 1850.2MHz

Result:	Passed
Setup No.:	B01_direct
Date of Test:	2011/08/19 19:23
Body:	FCC47CFRChIPART24PERSONAL COMMUNICATIONS SERVICES
Test Specification:	FCC part 2 and 24

Detailed Results:

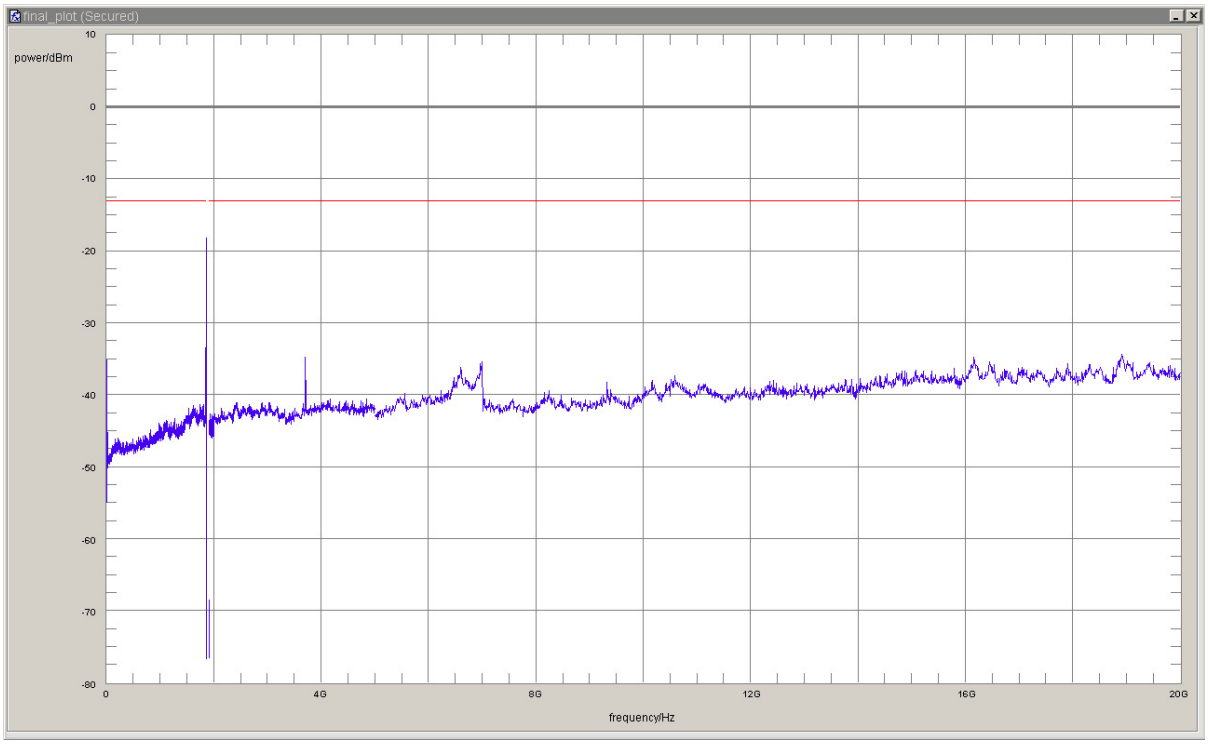

acc. Title 47 CFR chapter I part 24 subpart E

detector	trace	resolution bandwidth /kHz	frequency /MHz	peak value /dBm	margin to limit /dB	limit /dBm	verdict
peak	maxhold	100	1847.48	-32.8	19.8	-13.0	passed
peak	maxhold	100	1847.52	-31.9	18.9	-13.0	passed
peak	maxhold	100	1847.59	-32.7	19.7	-13.0	passed
peak	maxhold	100	1847.63	-31.5	18.5	-13.0	passed
peak	maxhold	100	1847.67	-31.8	18.8	-13.0	passed
peak	maxhold	100	1847.70	-32.5	19.5	-13.0	passed
peak	maxhold	100	1847.81	-32.3	19.3	-13.0	passed
peak	maxhold	100	1847.85	-30.4	17.4	-13.0	passed
peak	maxhold	100	1847.88	-31.2	18.2	-13.0	passed
peak	maxhold	100	1848.04	-30.6	17.6	-13.0	passed
peak	maxhold	100	1848.08	-31.4	18.4	-13.0	passed
peak	maxhold	100	1848.12	-31.1	18.1	-13.0	passed
peak	maxhold	100	1848.15	-31.1	18.1	-13.0	passed
peak	maxhold	100	1848.19	-31.7	18.7	-13.0	passed
peak	maxhold	100	1848.22	-32.6	19.6	-13.0	passed
peak	maxhold	100	1848.30	-32.1	19.1	-13.0	passed
peak	maxhold	100	1848.33	-30.5	17.5	-13.0	passed
peak	maxhold	100	1848.37	-32.4	19.4	-13.0	passed
peak	maxhold	100	1848.40	-32.5	19.5	-13.0	passed
peak	maxhold	100	1848.44	-28.6	15.6	-13.0	passed
peak	maxhold	100	1848.48	-28.1	15.1	-13.0	passed
peak	maxhold	100	1848.51	-28.1	15.1	-13.0	passed
peak	maxhold	100	1848.55	-29.2	16.2	-13.0	passed
peak	maxhold	100	1848.64	-28.3	15.3	-13.0	passed
peak	maxhold	100	1848.68	-27.7	14.7	-13.0	passed
peak	maxhold	100	1848.71	-28.2	15.2	-13.0	passed
peak	maxhold	100	1848.78	-30.2	17.2	-13.0	passed
peak	maxhold	100	1848.82	-31.8	18.8	-13.0	passed
peak	maxhold	100	1848.86	-29.4	16.4	-13.0	passed
peak	maxhold	100	1848.89	-30.0	17.0	-13.0	passed
peak	maxhold	100	1848.93	-31.2	18.2	-13.0	passed
peak	maxhold	100	1848.96	-31.1	18.1	-13.0	passed
peak	maxhold	100	1849.00	-32.0	19.0	-13.0	passed
peak	maxhold	3	1849.9058	-32.0	19.0	-13.0	passed
peak	maxhold	3	1849.9259	-28.8	15.8	-13.0	passed
peak	maxhold	3	1849.9339	-26.8	13.8	-13.0	passed
peak	maxhold	3	1849.9559	-22.9	9.9	-13.0	passed
peak	maxhold	3	1849.9639	-21.1	8.1	-13.0	passed
peak	maxhold	3	1849.9760	-18.2	5.2	-13.0	passed
peak	maxhold	3	1849.9960	-18.7	5.7	-13.0	passed
peak	maxhold	3	1850.0000	-18.7	5.7	-13.0	passed

no further values have been found with a margin of less than 20 dB

Test: 24.3; Frequency Band = 1900, Mode = GSM, Channel = 661, Frequency = 1880.0MHz

Result:	Passed
Setup No.:	B01_direct
Date of Test:	2011/08/19 19:13
Body:	FCC47CFRChIPART24PERSONAL COMMUNICATIONS SERVICES
Test Specification:	FCC part 2 and 24

Detailed Results:

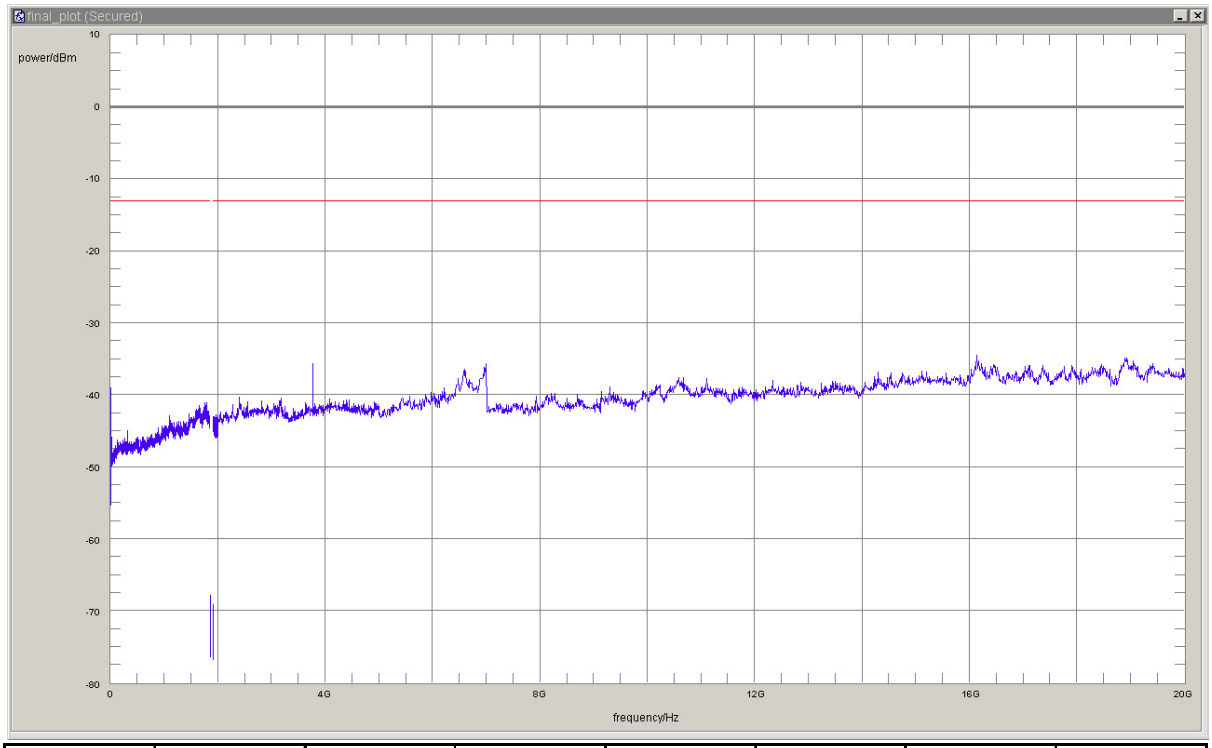

detector	trace	resolution bandwidth /kHz	frequency /MHz	peak value /dBm	margin to limit /dB	limit /dBm	verdict
peak	maxhold	1000	16132.265	-34.44	21.44	-13	passed

no further values have been found with a margin of less than 20 dB

Test: 24.3; Frequency Band = 1900, Mode = GSM, Channel = 810, Frequency = 1909.8MHz

Result:	Passed
Setup No.:	B01_direct
Date of Test:	2011/08/19 19:30
Body:	FCC47CFRChIPART24PERSONAL COMMUNICATIONS SERVICES
Test Specification:	FCC part 2 and 24

Detailed Results:

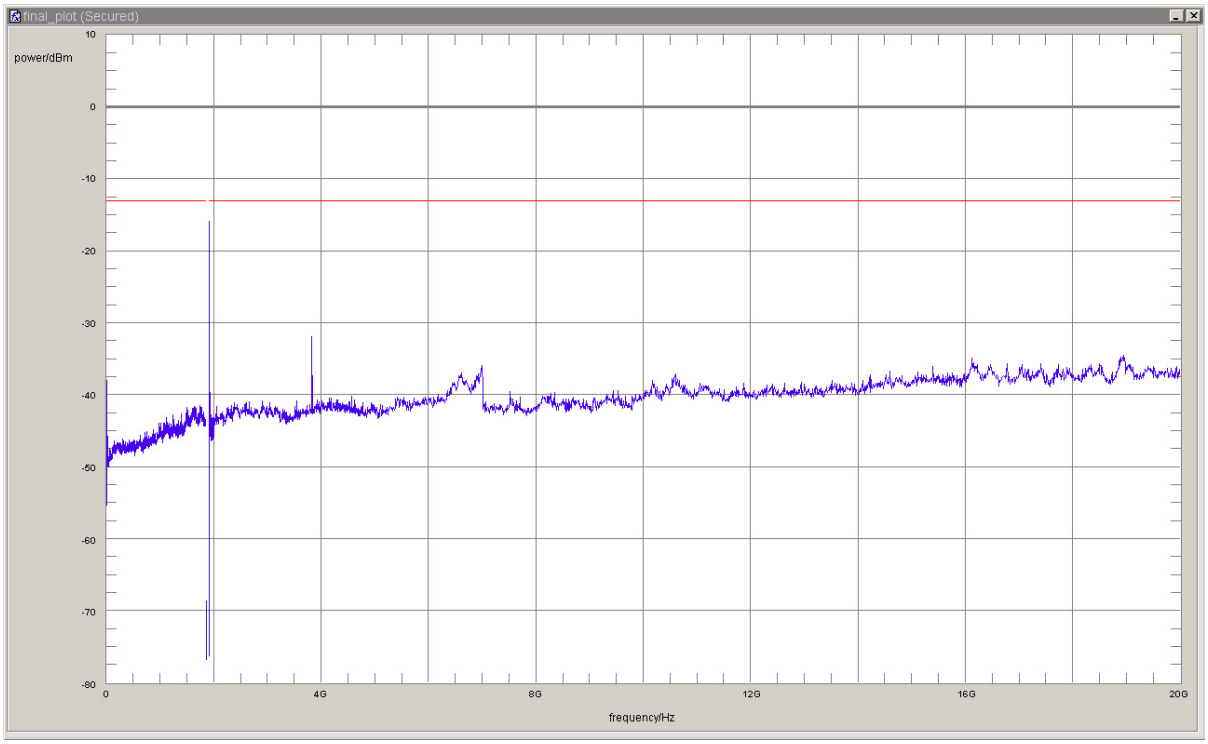

acc. Title 47 CFR chapter I part 24 subpart E

detector	trace	resolution bandwidth /kHz	frequency /MHz	peak value /dBm	margin to limit /dB	limit /dBm	verdict
peak	maxhold	3	1910.0000	-15.8	2.8	-13.0	passed
peak	maxhold	3	1910.0180	-16.4	3.4	-13.0	passed
peak	maxhold	3	1910.0461	-20.7	7.7	-13.0	passed
peak	maxhold	3	1910.0721	-26.6	13.6	-13.0	passed
peak	maxhold	3	1910.0802	-29.1	16.1	-13.0	passed
peak	maxhold	100	1911.00	-30.2	17.2	-13.0	passed
peak	maxhold	100	1911.04	-31.4	18.4	-13.0	passed
peak	maxhold	100	1911.07	-31.5	18.5	-13.0	passed
peak	maxhold	100	1911.11	-31.5	18.5	-13.0	passed
peak	maxhold	100	1911.14	-32.3	19.3	-13.0	passed
peak	maxhold	100	1911.18	-32.9	19.9	-13.0	passed
peak	maxhold	100	1911.22	-32.3	19.3	-13.0	passed
peak	maxhold	100	1911.25	-29.7	16.7	-13.0	passed
peak	maxhold	100	1911.29	-28.7	15.7	-13.0	passed
peak	maxhold	100	1911.32	-28.1	15.1	-13.0	passed
peak	maxhold	100	1911.36	-26.9	13.9	-13.0	passed
peak	maxhold	100	1911.49	-29.3	16.3	-13.0	passed
peak	maxhold	100	1911.52	-30.5	17.5	-13.0	passed
peak	maxhold	100	1911.56	-32.0	19.0	-13.0	passed
peak	maxhold	100	1911.60	-31.9	18.9	-13.0	passed
peak	maxhold	100	1911.63	-31.7	18.7	-13.0	passed
peak	maxhold	100	1911.67	-30.2	17.2	-13.0	passed
peak	maxhold	100	1911.70	-31.6	18.6	-13.0	passed
peak	maxhold	100	1911.74	-32.7	19.7	-13.0	passed
peak	maxhold	100	1911.78	-31.9	18.9	-13.0	passed
peak	maxhold	100	1911.81	-31.6	18.6	-13.0	passed
peak	maxhold	100	1911.85	-32.1	19.1	-13.0	passed
peak	maxhold	100	1911.88	-32.5	19.5	-13.0	passed
peak	maxhold	100	1911.96	-31.5	18.5	-13.0	passed
peak	maxhold	100	1911.99	-32.8	19.8	-13.0	passed
peak	maxhold	100	1912.12	-32.5	19.5	-13.0	passed
peak	maxhold	100	1912.15	-31.4	18.4	-13.0	passed
peak	maxhold	100	1912.23	-32.8	19.8	-13.0	passed
peak	maxhold	100	1912.26	-32.3	19.3	-13.0	passed
peak	maxhold	100	1912.37	-32.9	19.9	-13.0	passed
peak	maxhold	100	1912.44	-32.7	19.7	-13.0	passed
peak	maxhold	100	1912.75	-32.6	19.6	-13.0	passed
peak	maxhold	100	1912.79	-32.6	19.6	-13.0	passed
peak	maxhold	100	1912.82	-32.1	19.1	-13.0	passed
peak	maxhold	1000	3821.6	-31.9	18.9	-13.0	passed

no further values have been found with a margin of less than 20 dB

Test: 24.3; Frequency Band = FDD2, Mode = HSDPA, Channel = 9262, Frequency = 1852.4MHz

Result: Passed

Setup No.: B01_direct

Date of Test: 2011/08/20 1:05

Body: FCC47CFRChIPART24PERSONAL COMMUNICATIONS SERVICES

Test Specification: FCC part 2 and 24

Detailed Results:

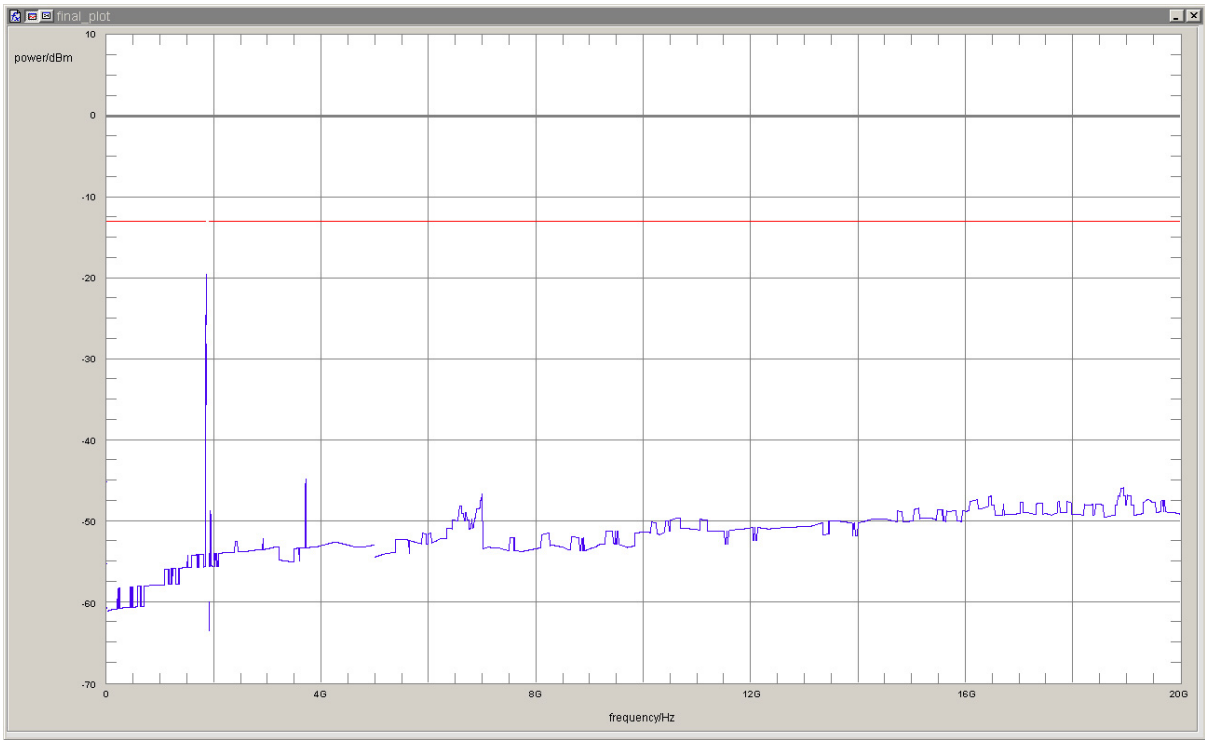

detector	trace	resolution bandwidth /kHz	frequency /MHz	peak value /dBm	margin to limit /dB	limit /dBm	verdict
rms	maxhold	100	1848.78	-19.5	6.5	-13.0	passed
rms	maxhold	50	1850.00	-28.1	15.1	-13.0	passed

no further values have been found with a margin of less than 20 dB

Test: 24.3; Frequency Band = FDD2, Mode = HSDPA, Channel = 9400, Frequency = 1880MHz

Result: Passed

Setup No.: B01_direct

Date of Test: 2011/08/20 0:55

Body: FCC47CFRChIPART24PERSONAL COMMUNICATIONS SERVICES

Test Specification: FCC part 2 and 24

Detailed Results:

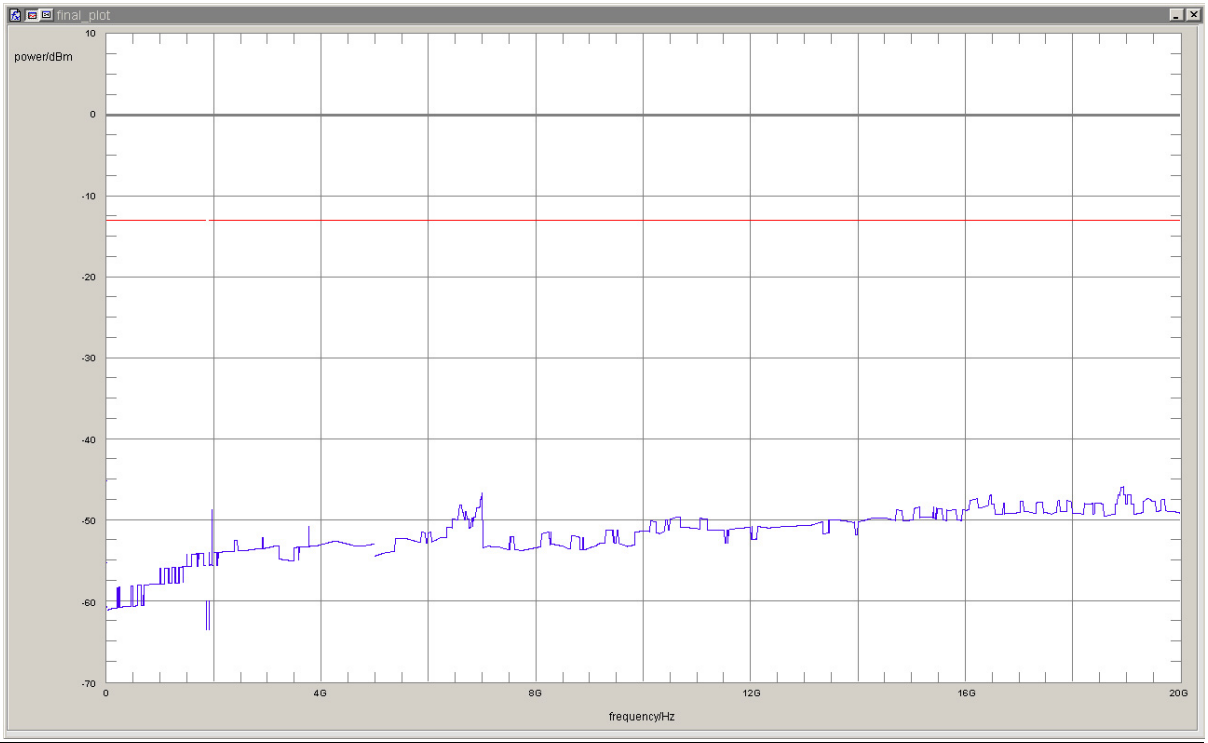

detector	trace	resolution bandwidth /kHz	frequency /MHz	peak value /dBm	margin to limit /dB	limit /dBm	verdict
rms	maxhold	1	0.009	-45.22	32.22	-13	passed

no further values have been found with a margin of less than 20 dB

Test: 24.3; Frequency Band = FDD2, Mode = HSDPA, Channel = 9538, Frequency = 1907.6MHz

Result: Passed

Setup No.: B01_direct

Date of Test: 2011/08/20 1:16

Body: FCC47CFRChIPART24PERSONAL COMMUNICATIONS SERVICES

Test Specification: FCC part 2 and 24

Detailed Results:

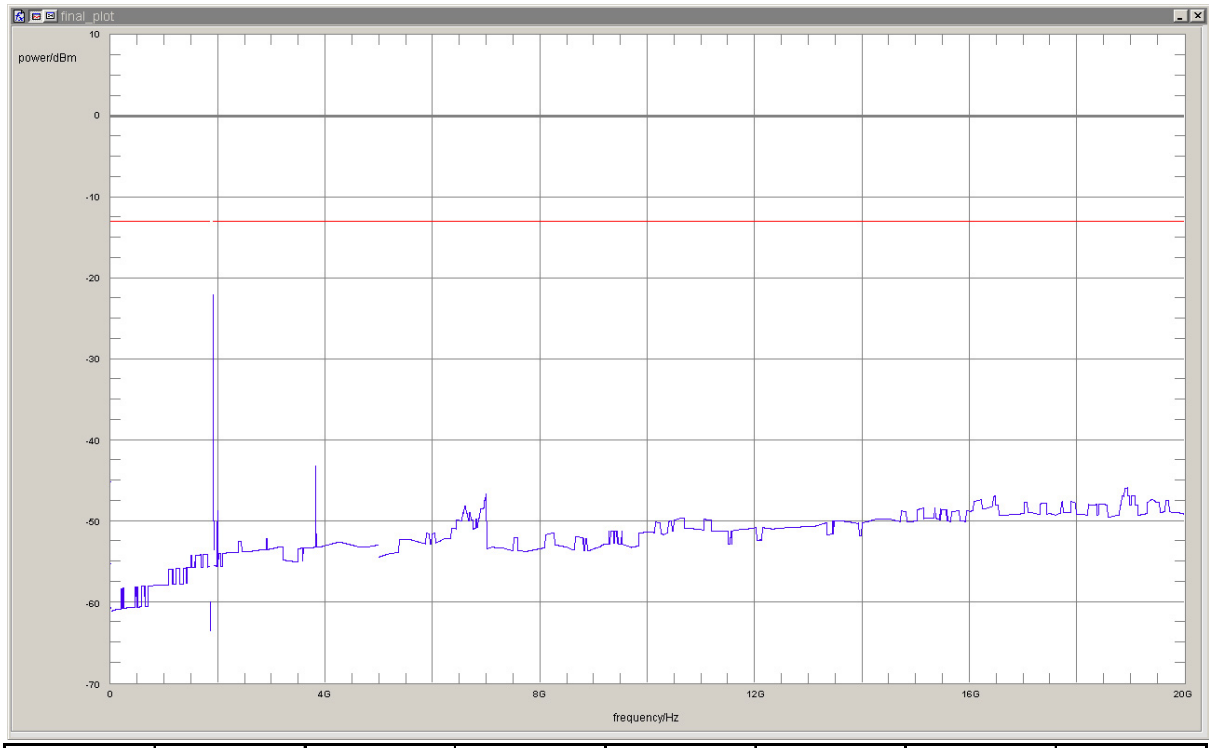

detector	trace	resolution bandwidth /kHz	frequency /MHz	peak value /dBm	margin to limit /dB	limit /dBm	verdict
rms	maxhold	50	1910.03	-30.7	17.7	-13.0	passed
rms	maxhold	100	1911.23	-22.1	9.1	-13.0	passed

no further values have been found with a margin of less than 20 dB

Test: 24.3; Frequency Band = FDD2, Mode = HSUPA, Channel = 9262, Frequency = 1852.4MHz

Result:	Passed
Setup No.:	B01_direct
Date of Test:	2011/08/20 2:16
Body:	FCC47CFRChIPART24PERSONAL COMMUNICATIONS SERVICES
Test Specification:	FCC part 2 and 24

Detailed Results:

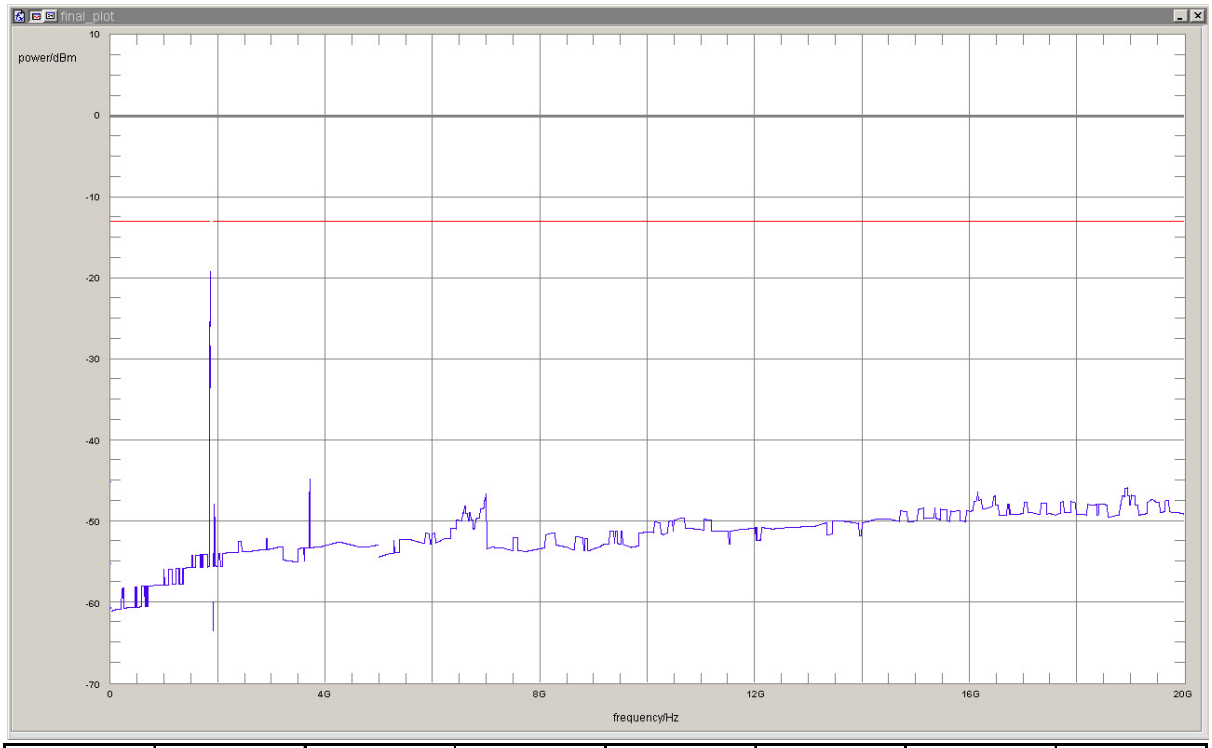

detector	trace	resolution bandwidth /kHz	frequency /MHz	peak value /dBm	margin to limit /dB	limit /dBm	verdict
rms	maxhold	100	1848.91	-19.2	6.2	-13.0	passed
rms	maxhold	50	1849.98	-28.4	15.4	-13.0	passed

no further values have been found with a margin of less than 20 dB

Test: 24.3; Frequency Band = FDD2, Mode = HSUPA, Channel = 9400, Frequency = 1880MHz

Result: Passed

Setup No.: B01_direct

Date of Test: 2011/08/20 2:10

Body: FCC47CFRChIPART24PERSONAL COMMUNICATIONS SERVICES

Test Specification: FCC part 2 and 24

Detailed Results:

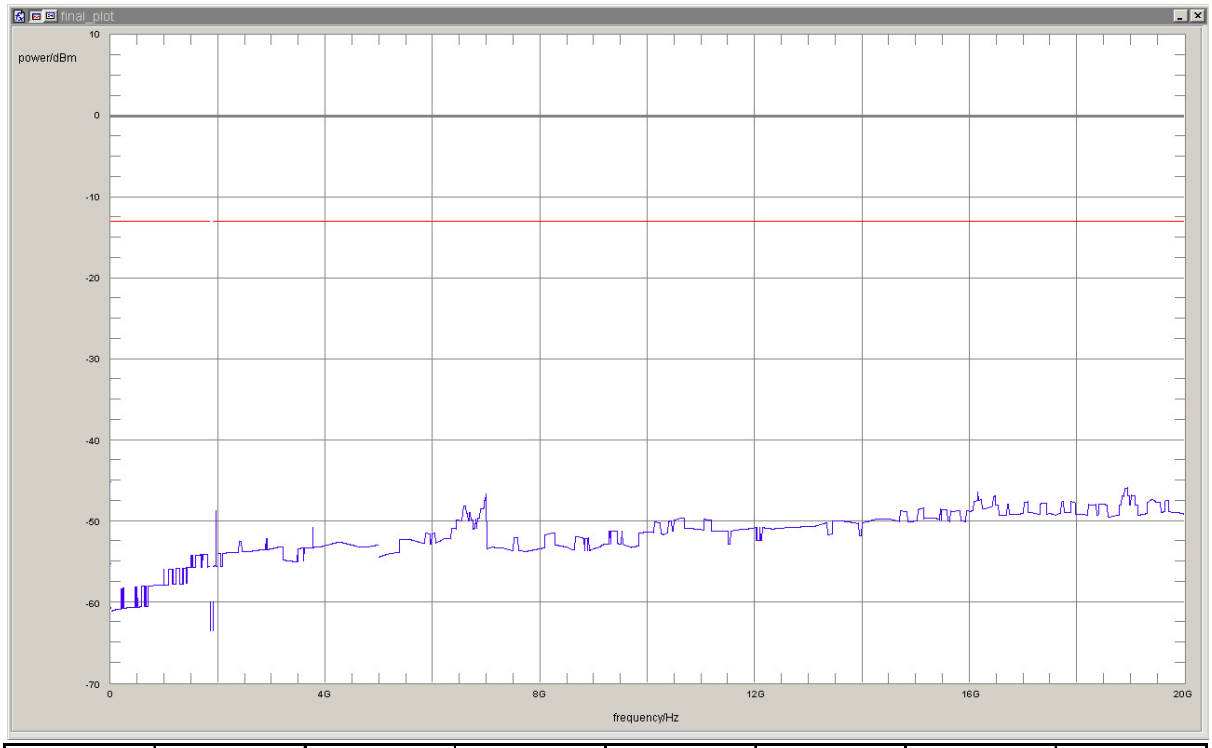

detector	trace	resolution bandwidth /kHz	frequency /MHz	peak value /dBm	margin to limit /dB	limit /dBm	verdict
rms	maxhold	1	0.009	-45.22	32.22	-13	passed

no further values have been found with a margin of less than 20 dB

Test: 24.3; Frequency Band = FDD2, Mode = HSUPA, Channel = 9538, Frequency = 1907.6MHz

Result:	Passed
Setup No.:	B01_direct
Date of Test:	2011/08/20 2:23
Body:	FCC47CFRChIPART24PERSONAL COMMUNICATIONS SERVICES
Test Specification:	FCC part 2 and 24

Detailed Results:

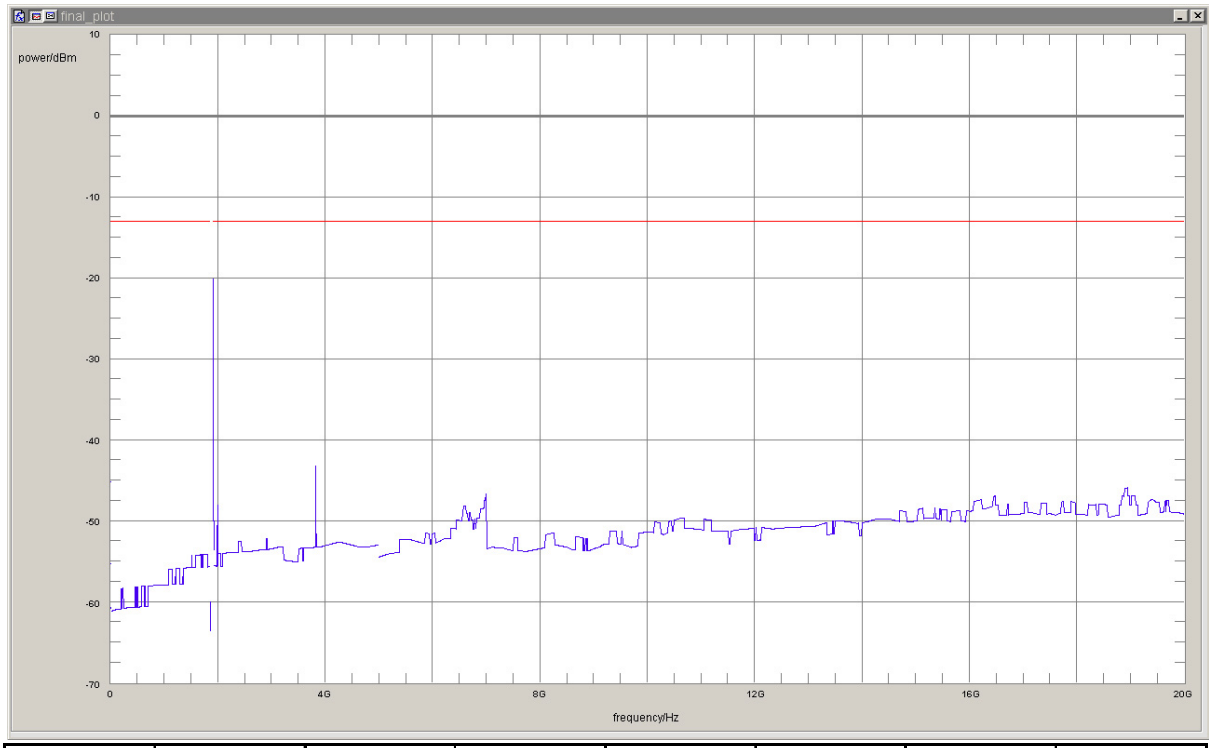

detector	trace	resolution bandwidth /kHz	frequency /MHz	peak value /dBm	margin to limit /dB	limit /dBm	verdict
rms	maxhold	50	1910.02	-30.9	17.9	-13.0	passed
rms	maxhold	100	1911.14	-20.1	7.1	-13.0	passed

no further values have been found with a margin of less than 20 dB

Test: 24.3; Frequency Band = FDD2, Mode = W-CDMA, Channel = 9262, Frequency = 1852.4MHz

Result: Passed

Setup No.: B01_direct

Date of Test: 2011/08/20 1:33

Body: FCC47CFRChIPART24PERSONAL COMMUNICATIONS SERVICES

Test Specification: FCC part 2 and 24

Detailed Results:

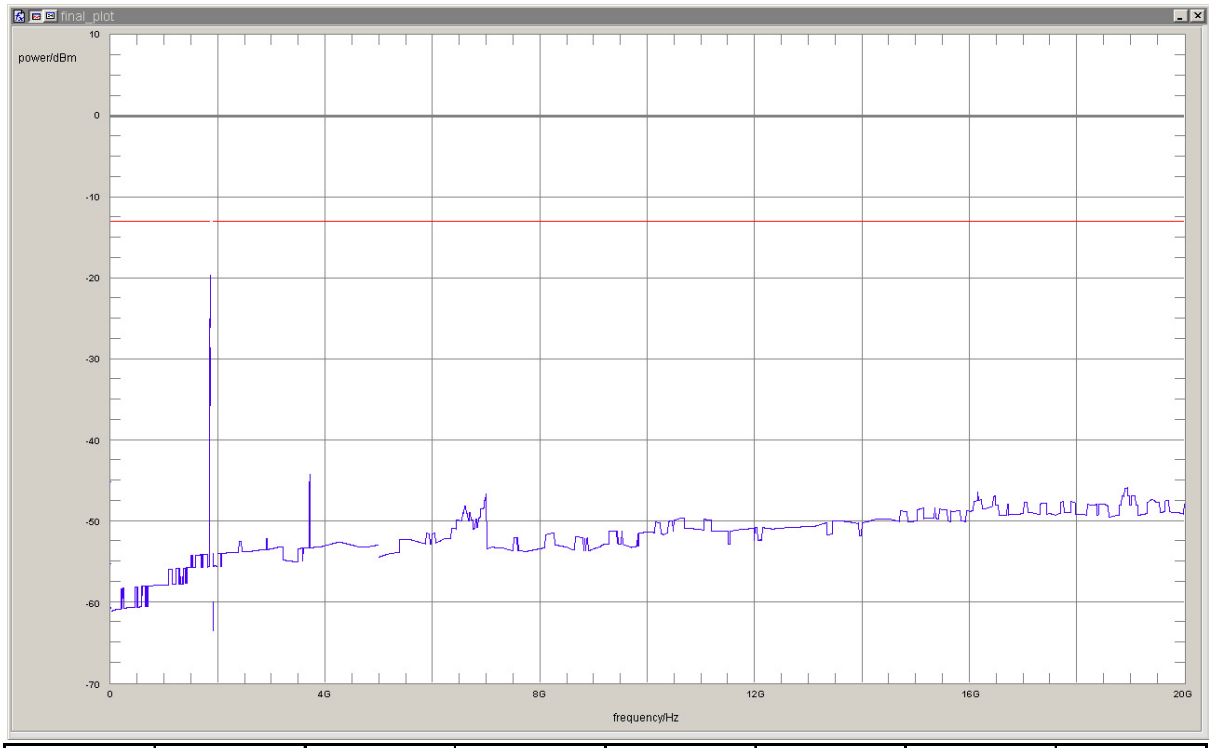

detector	trace	resolution bandwidth /kHz	frequency /MHz	peak value /dBm	margin to limit /dB	limit /dBm	verdict
rms	maxhold	100	1848.77	-19.7	6.7	-13.0	passed
rms	maxhold	50	1849.98	-28.6	15.6	-13.0	passed

no further values have been found with a margin of less than 20 dB

Test: 24.3; Frequency Band = FDD2, Mode = W-CDMA, Channel = 9400, Frequency = 1880MHz

Result: Passed

Setup No.: B01_direct

Date of Test: 2011/08/20 1:42

Body: FCC47CFRChIPART24PERSONAL COMMUNICATIONS SERVICES

Test Specification: FCC part 2 and 24

Detailed Results:

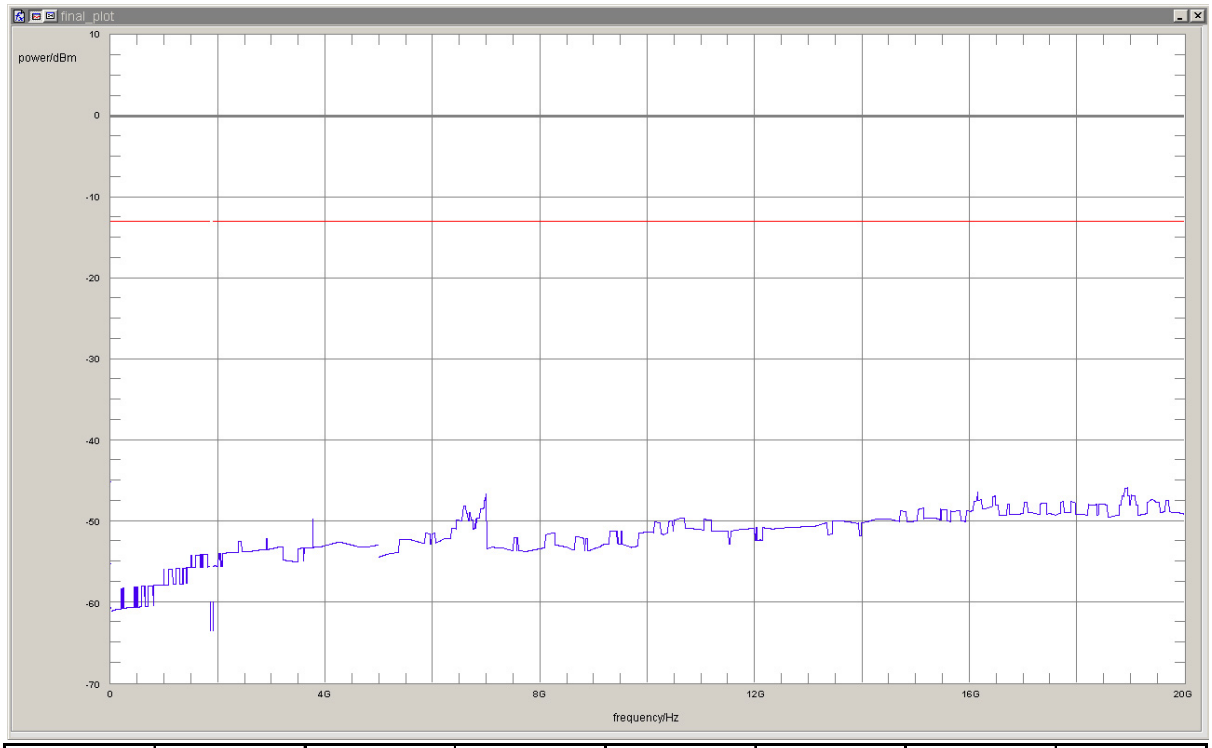

detector	trace	resolution bandwidth /kHz	frequency /MHz	peak value /dBm	margin to limit /dB	limit /dBm	verdict
rms	maxhold	1	0.009	-45.22	32.22	-13	passed

no further values have been found with a margin of less than 20 dB

Test: 24.3; Frequency Band = FDD2, Mode = W-CDMA, Channel = 9538, Frequency = 1907.6MHz

Result:	Passed
Setup No.:	B01_direct
Date of Test:	2011/08/20 1:50
Body:	FCC47CFRChIPART24PERSONAL COMMUNICATIONS SERVICES
Test Specification:	FCC part 2 and 24

Detailed Results:

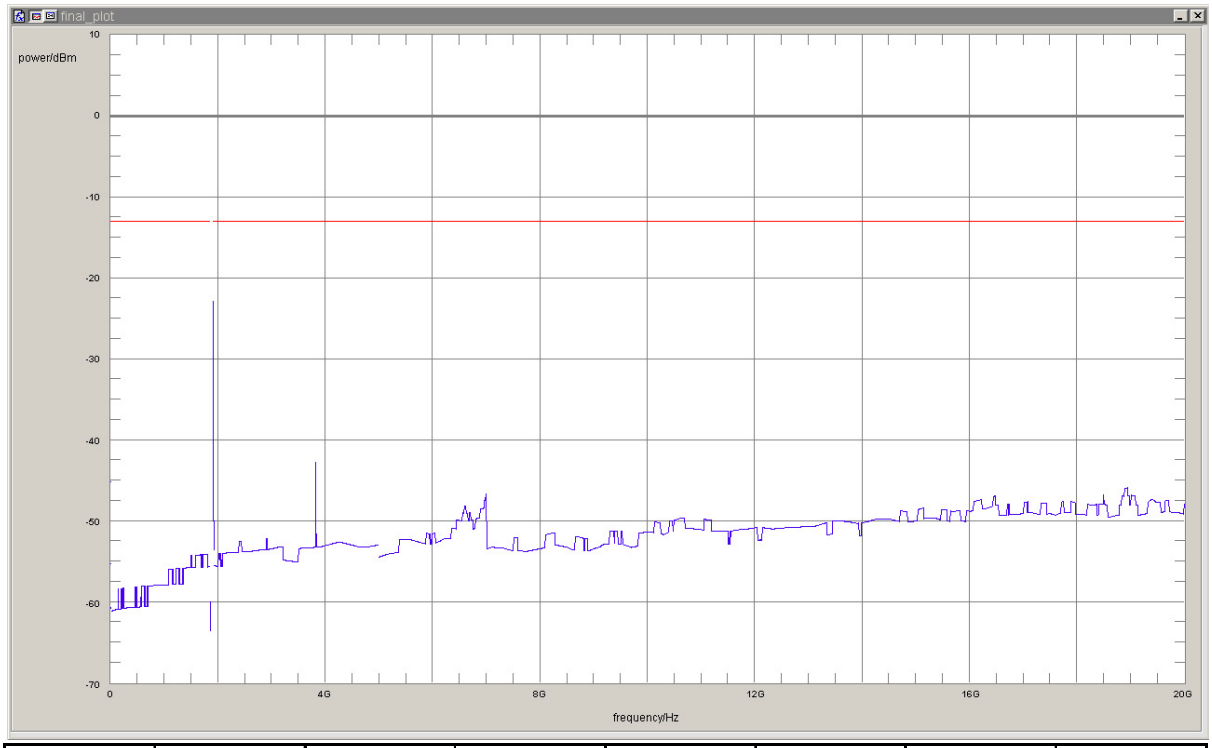

detector	trace	resolution bandwidth /kHz	frequency /MHz	peak value /dBm	margin to limit /dB	limit /dBm	verdict
rms	maxhold	50	1910.03	-31.5	18.5	-13.0	passed
rms	maxhold	100	1911.14	-22.9	9.9	-13.0	passed

no further values have been found with a margin of less than 20 dB

3.5.4 24.4 Field strength of spurious radiation §2.1053, §24.238

Test: 24.4; Frequency Band = 1900, Mode = EDGE, Channel = 512, Frequency = 1850.2MHz

Result:	Passed
Setup No.:	B01_rad
Date of Test:	2011/08/16 13:49
Body:	FCC47CFRChIPART24PERSONAL COMMUNICATIONS SERVICES
Test Specification:	FCC part 2 and 24

Detailed Results:

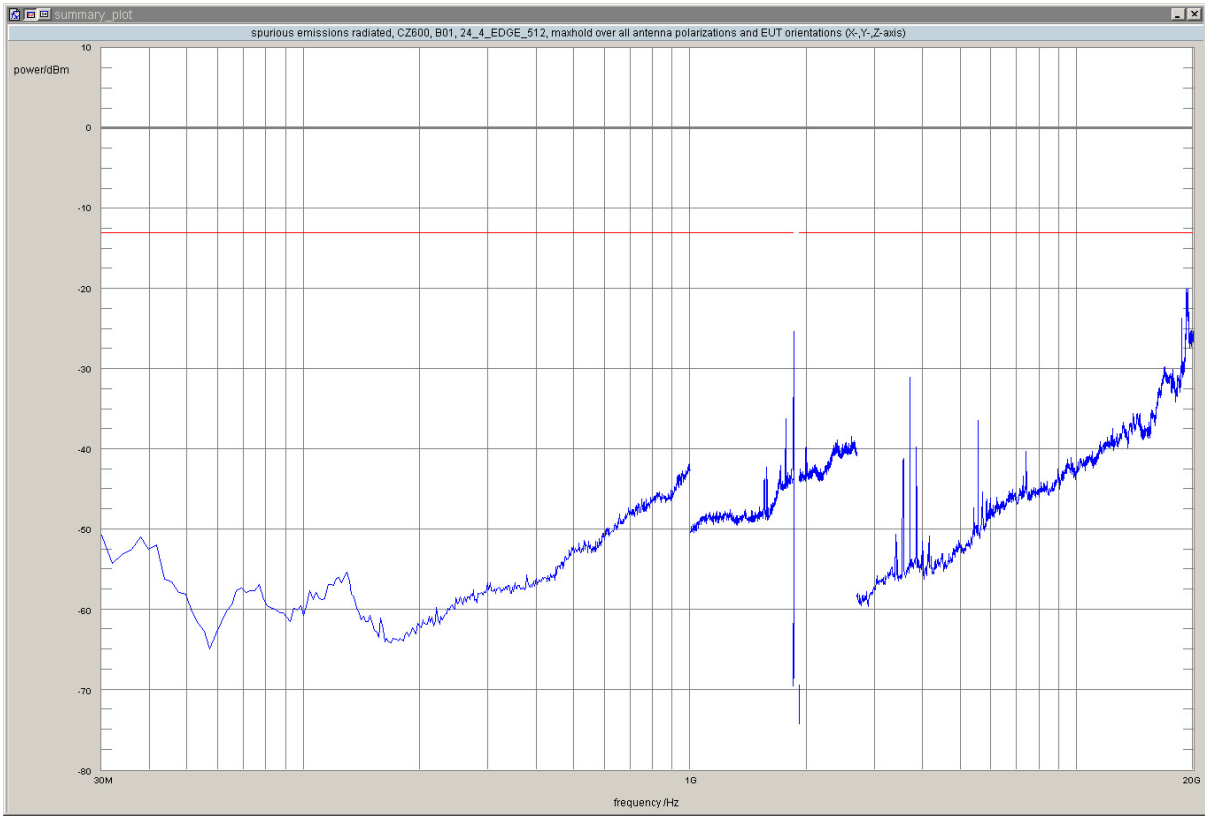

detector	trace	resolution bandwidth /kHz	frequency /MHz	peak value /dBm	limit /dBm	margin to limit /dB	azimuth /°	antenna polarization	EUT orientation	verdict
peak	maxhold	3	1849.9339	-30.21	-13.00	17.21	60.0	vertical	horizontal	passed
peak	maxhold	3	1849.9439	-31.51	-13.00	18.51	-180.0	horizontal	vertical	passed
peak	maxhold	3	1849.9579	-31.84	-13.00	18.84	-135.0	horizontal	vertical	passed
peak	maxhold	3	1849.9619	-27.04	-13.00	14.04	-180.0	vertical	horizontal	passed
peak	maxhold	3	1849.9739	-26.93	-13.00	13.93	45.0	horizontal	vertical	passed
peak	maxhold	3	1849.9880	-29.15	-13.00	16.15	-180.0	vertical	horizontal	passed
peak	maxhold	3	1849.9920	-25.29	-13.00	12.29	-180.0	horizontal	vertical	passed
peak	maxhold	1000	3699.6	-30.99	-13.00	17.99	90.0	vertical	vertical	passed
peak	maxhold	1000	18653.3	-23.67	-13.00	10.67	-180.0	horizontal	vertical	passed
peak	maxhold	1000	19214.4	-20.04	-13.00	7.04	-180.0	horizontal	vertical	passed
peak	maxhold	1000	19312.6	-20.92	-13.00	7.92	60.0	vertical	horizontal	passed
peak	maxhold	1000	19326.7	-19.95	-13.00	6.95	-45.0	horizontal	vertical	passed

no further values have been found with a margin of less than 20 dB

Test: 24.4; Frequency Band = 1900, Mode = EDGE, Channel = 661, Frequency = 1880.0MHz

Result: Passed

Setup No.: B01_rad

Date of Test: 2011/08/16 15:24

Body: FCC47CFRChIPART24PERSONAL COMMUNICATIONS SERVICES

Test Specification: FCC part 2 and 24

Detailed Results:

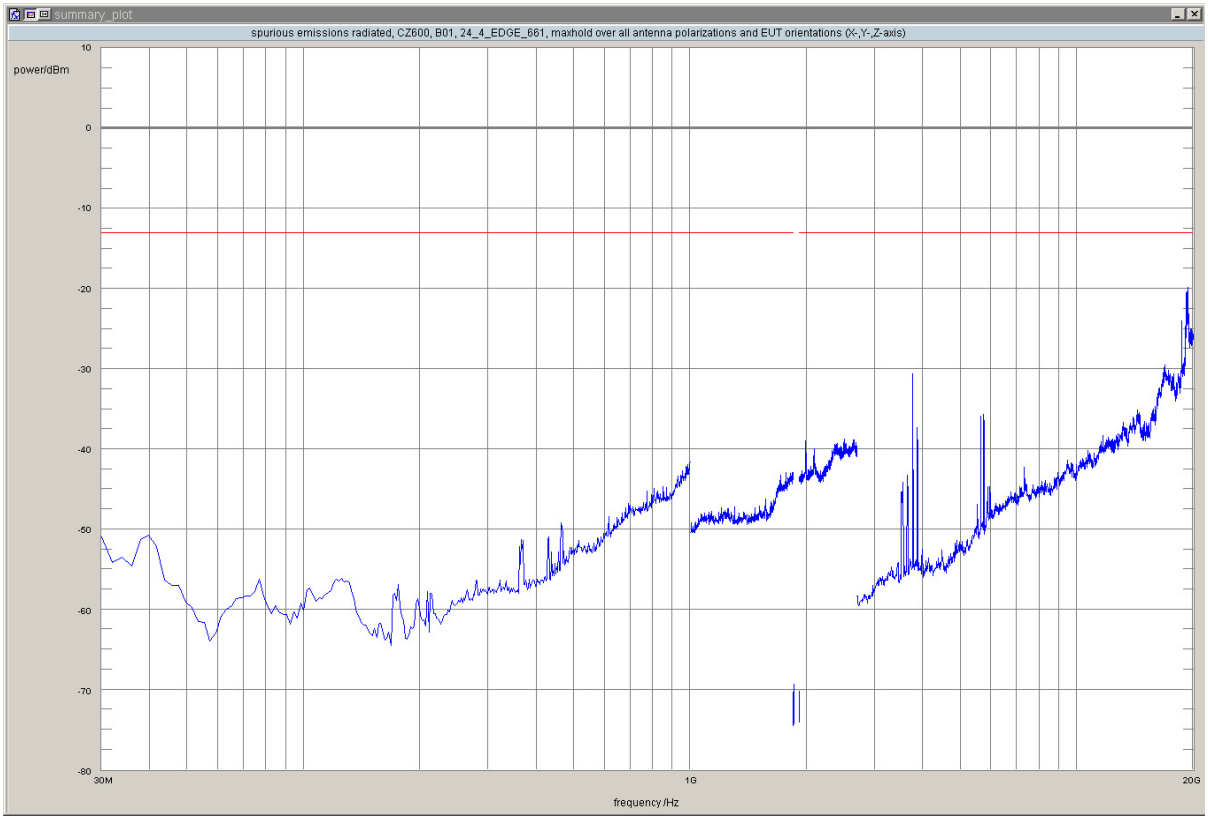

detector	trace	resolution bandwidth /kHz	frequency /MHz	peak value /dBm	limit /dBm	margin to limit /dB	azimuth /°	antenna polarization	EUT orientation	verdict
peak	maxhold	1000	3759.9	-30.64	-13.00	17.64	135.0	horizontal	vertical	passed
peak	maxhold	1000	18653.3	-24.04	-13.00	11.04	135.0	horizontal	vertical	passed
peak	maxhold	1000	19214.4	-20.44	-13.00	7.44	-135.0	vertical	vertical	passed
peak	maxhold	1000	19312.6	-20.85	-13.00	7.85	60.0	horizontal	horizontal	passed
peak	maxhold	1000	19326.7	-19.86	-13.00	6.86	0.0	horizontal	vertical	passed
peak	maxhold	1000	19340.7	-21.10	-13.00	8.10	45.0	horizontal	vertical	passed

no further values have been found with a margin of less than 20 dB

Test: 24.4; Frequency Band = 1900, Mode = EDGE, Channel = 810, Frequency = 1909.8MHz

Result: Passed

Setup No.: B01_rad

Date of Test: 2011/08/16 17:03

Body: FCC47CFRChIPART24PERSONAL COMMUNICATIONS SERVICES

Test Specification: FCC part 2 and 24

Detailed Results:

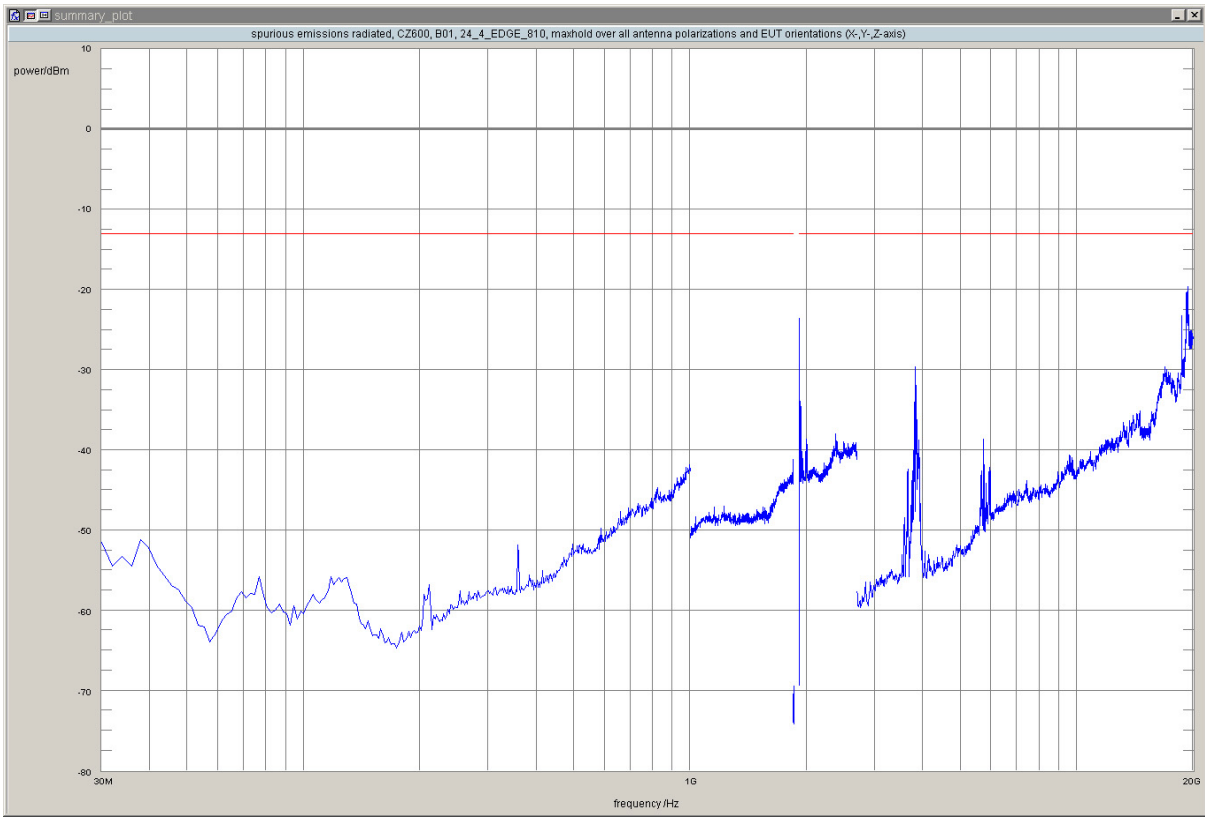

detector	trace	resolution bandwidth /kHz	frequency /MHz	peak value /dBm	limit /dBm	margin to limit /dB	azimuth /°	antenna polarization	EUT orientation	verdict
peak	maxhold	3	1910.0100	-23.57	-13.00	10.57	60.0	vertical	horizontal	passed
peak	maxhold	3	1910.0200	-24.71	-13.00	11.71	-180.0	horizontal	vertical	passed
peak	maxhold	3	1910.0381	-26.78	-13.00	13.78	-180.0	vertical	horizontal	passed
peak	maxhold	3	1910.0421	-29.86	-13.00	16.86	120.0	vertical	horizontal	passed
peak	maxhold	3	1910.0461	-32.19	-13.00	19.19	120.0	vertical	horizontal	passed
peak	maxhold	3	1910.0501	-32.45	-13.00	19.45	-180.0	vertical	horizontal	passed
peak	maxhold	3	1910.0541	-32.36	-13.00	19.36	120.0	vertical	horizontal	passed
peak	maxhold	100	1911.38	-30.76	-13.00	17.76	-180.0	horizontal	vertical	passed
peak	maxhold	1000	3820.2	-29.59	-13.00	16.59	135.0	horizontal	vertical	passed
peak	maxhold	1000	18653.3	-23.21	-13.00	10.21	-135.0	vertical	vertical	passed
peak	maxhold	1000	19312.6	-20.98	-13.00	7.98	60.0	horizontal	horizontal	passed
peak	maxhold	1000	19326.7	-19.62	-13.00	6.62	0.0	vertical	horizontal	passed

no further values have been found with a margin of less than 20 dB

Test: 24.4; Frequency Band = 1900, Mode = GSM, Channel = 512, Frequency = 1850.2MHz

Result: Passed

Setup No.: B01_rad

Date of Test: 2011/08/16 10:23

Body: FCC47CFRChIPART24PERSONAL COMMUNICATIONS SERVICES

Test Specification: FCC part 2 and 24

Detailed Results:

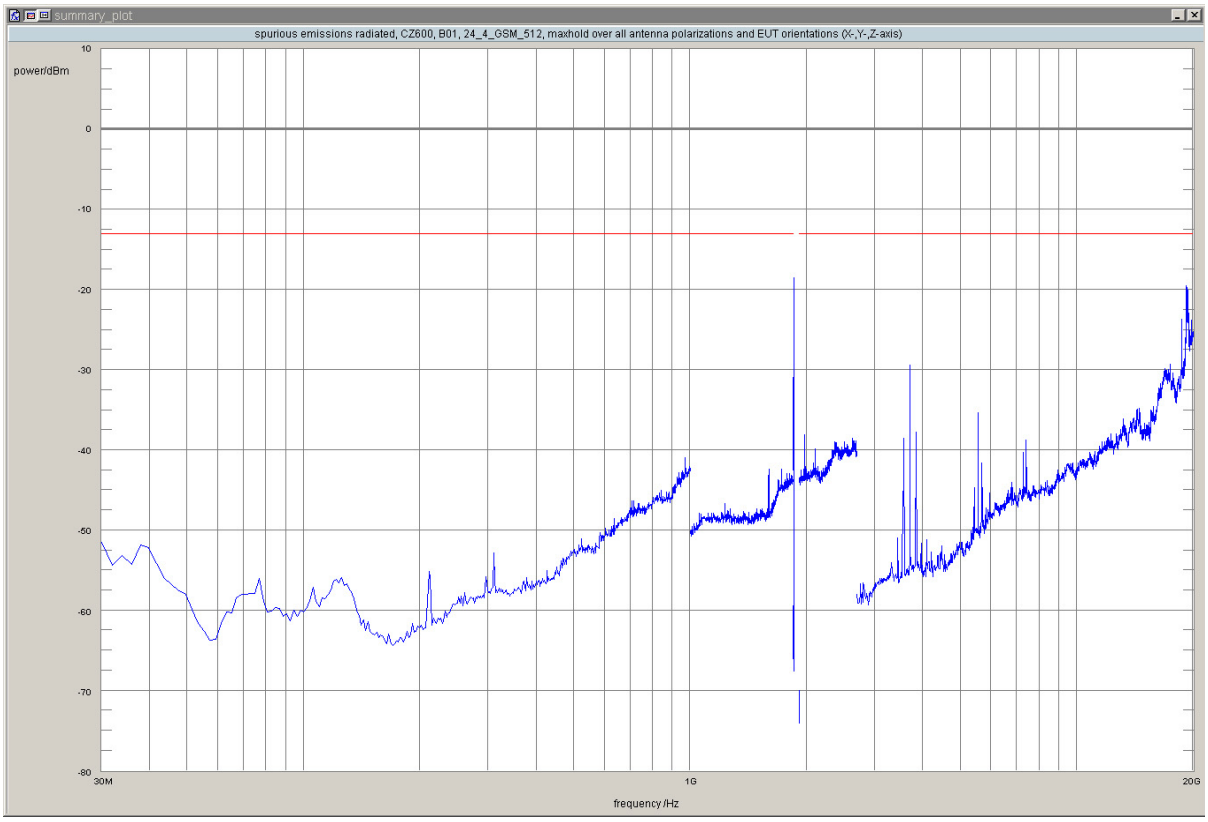

detector	trace	resolution bandwidth /kHz	frequency /MHz	peak value /dBm	limit /dBm	margin to limit /dB	azimuth /°	antenna polarization	EUT orientation	verdict
peak	maxhold	100	1848.59	-31.02	-13.00	18.02	-180.0	horizontal	vertical	passed
peak	maxhold	100	1848.87	-30.97	-13.00	17.97	-180.0	vertical	horizontal	passed
peak	maxhold	3	1849.9279	-30.29	-13.00	17.29	120.0	vertical	horizontal	passed
peak	maxhold	3	1849.9319	-31.18	-13.00	18.18	135.0	horizontal	vertical	passed
peak	maxhold	3	1849.9439	-28.29	-13.00	15.29	45.0	horizontal	vertical	passed
peak	maxhold	3	1849.9499	-26.62	-13.00	13.62	60.0	vertical	horizontal	passed
peak	maxhold	3	1849.9599	-23.40	-13.00	10.40	-180.0	horizontal	vertical	passed
peak	maxhold	3	1849.9659	-23.83	-13.00	10.83	60.0	vertical	horizontal	passed
peak	maxhold	3	1849.9980	-18.49	-13.00	5.49	-180.0	vertical	horizontal	passed
peak	maxhold	1000	3699.6	-29.37	-13.00	16.37	90.0	vertical	vertical	passed
peak	maxhold	1000	18653.3	-23.69	-13.00	10.69	135.0	vertical	vertical	passed
peak	maxhold	1000	19214.4	-19.54	-13.00	6.54	90.0	vertical	vertical	passed
peak	maxhold	1000	19228.5	-19.82	-13.00	6.82	-180.0	horizontal	horizontal	passed
peak	maxhold	1000	19312.6	-20.84	-13.00	7.84	-45.0	horizontal	vertical	passed
peak	maxhold	1000	19326.7	-20.31	-13.00	7.31	-180.0	vertical	vertical	passed

no further values have been found with a margin of less than 20 dB

Test: 24.4; Frequency Band = 1900, Mode = GSM, Channel = 661, Frequency = 1880.0MHz

Result: Passed

Setup No.: B01_rad

Date of Test: 2011/08/16 8:41

Body: FCC47CFRChIPART24PERSONAL COMMUNICATIONS SERVICES

Test Specification: FCC part 2 and 24