Operator's Manual

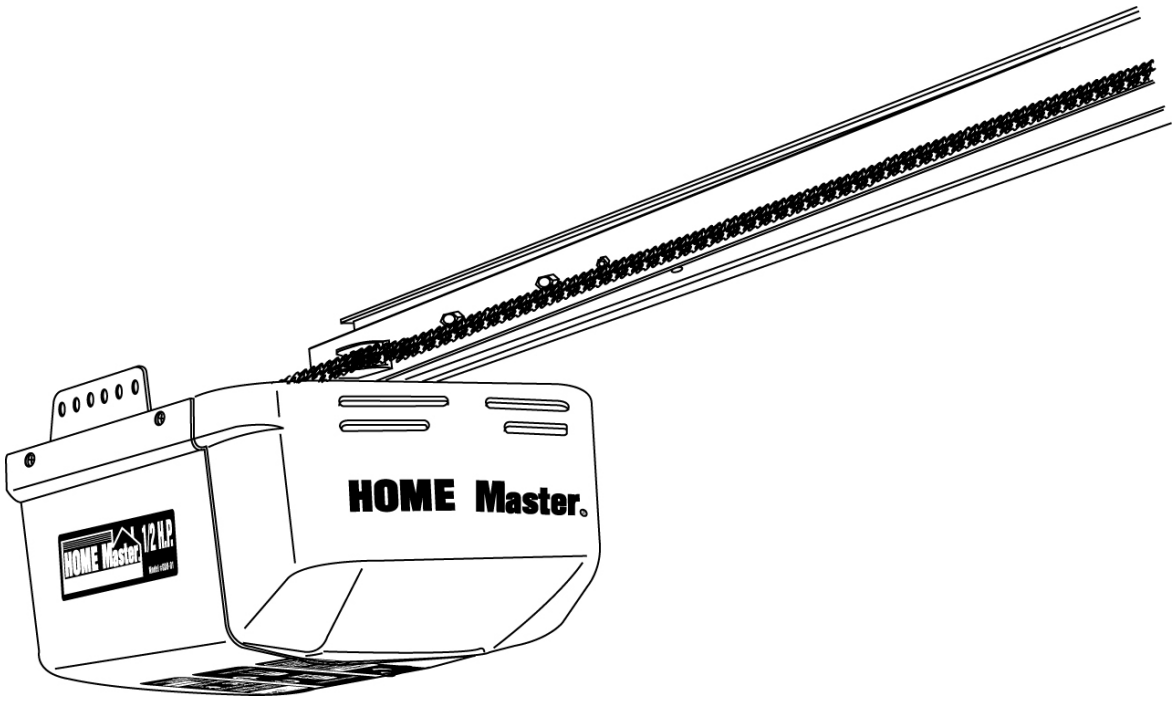

CAUTION:

MODEL: GDK02

Before using this Garage Door Opener, Read this manual and follow
All its Safety Rules and Operating Instructions

■Safety Instructions■Installation■Operation Maintenance■Parts List

Power Tool Specialists Inc.

Visit our Home Master website: www.homemaster-gdo.com

Customer Help Line

1-800-243-5114

⚠ WARNING

Child can be pinned under automatic garage door. *Death or serious injury can result.*

- **Never let child walk or run under moving door.**
- **Never let child use door opener controls.**
- **Always keep moving door in sight.**
- **If person is pinned, push control button or use emergency release.**
- **Test door opener monthly:**

  Refer to your owner's manual.

  Place one-inch object (or 2x4 laid flat) on floor.

  If door fails to reverse on contact, adjust opener.

  If opener still fails to reverse door, repair or replace opener.

Do not remove or paint over this label.
Mount wall control out of child's reach
(at least 5 feet above floor).
Place next to wall control.

Before You Begin 1
Tools Required for Assembly 3
Materials Not Included In The Carton 3
Preparing The Installation Site 4
Assembling Rail Components 5
A) Attaching the Trolley & Header Bracket to the Rail 5
B) Attaching the Rail to the Motor Assembly 7
C) Attaching the Chain to the Motor & Rail Assembly 9
Mounting the Assembled Garage Door Opener 12
Attach the Motor Assembly to Ceiling 16
Install Safety Sensors and Remote Switches 17
A) Install the Safety Reversing Sensors 17
B) Install The Door Bell 20
C) Install the Keyless Entry Control Pad 22
Attach The Door Brackets To The Garage Door And Garage Door Bracket 23
Testing and Adjusting the Garage Door Opener 29
A) Adjusting the Chain Tension 29
B) Testing and Adjusting the Door Range of Motion 29
C) Testing and Adjusting the Safety Reversing Sensors 31
D) Testing and Adjusting Door Force 31
E) Testing and Adjusting The Safety Reverse Feature 32
Programming the Remote Controls 33
Using your Garage Door Opener 35
Caring for your Garage Door Opener 36
Homelink Programming 37
Troubleshooting 39
Parts List and Schematic Diagrams 41
Parts List: Schematic A - Rail Assembly and Other Parts 41
Parts List: Schematic B - Motor Assembly 43

Before You Begin

Before you begin, make sure you have all the loose parts that shipped in the carton

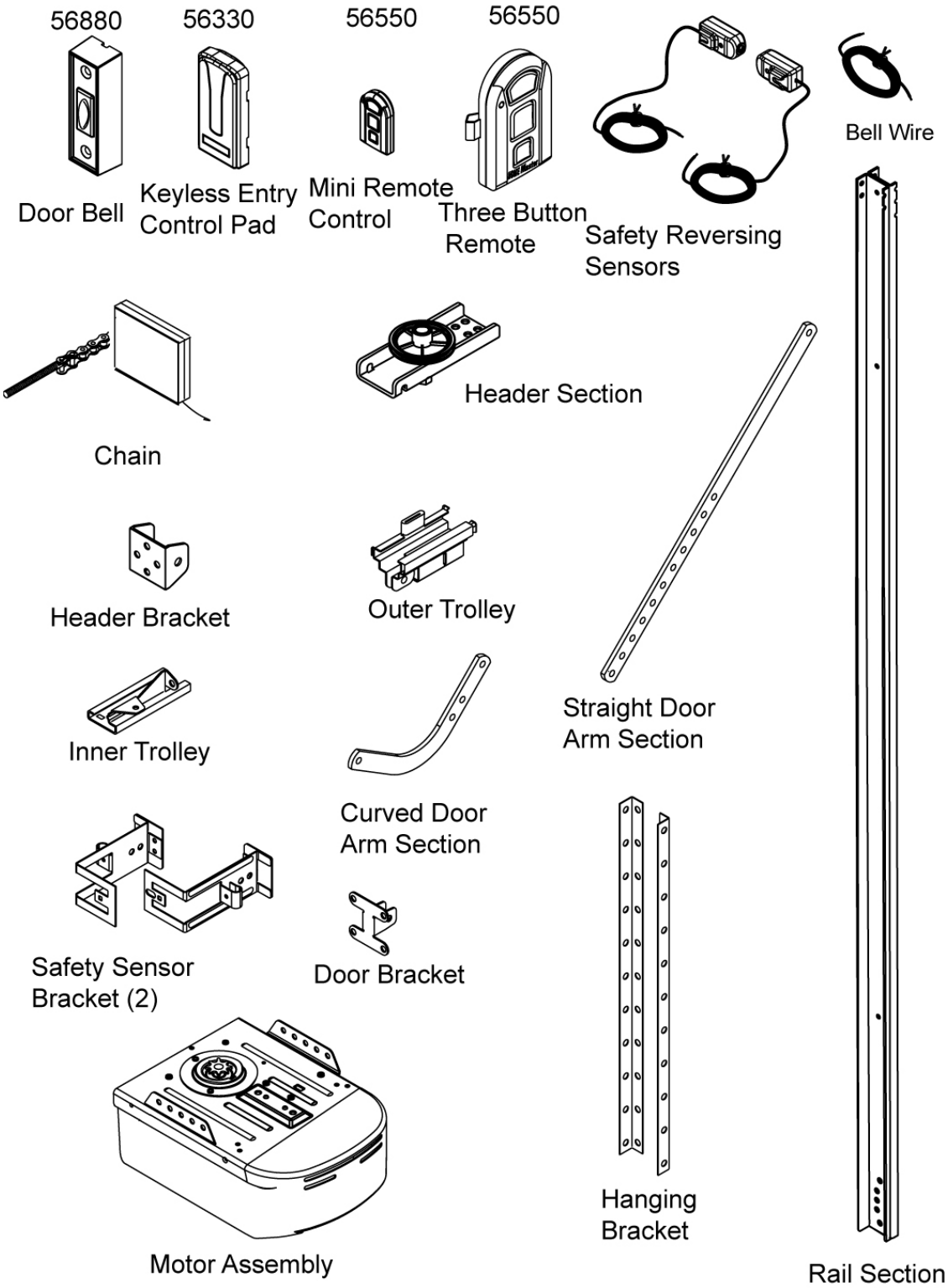

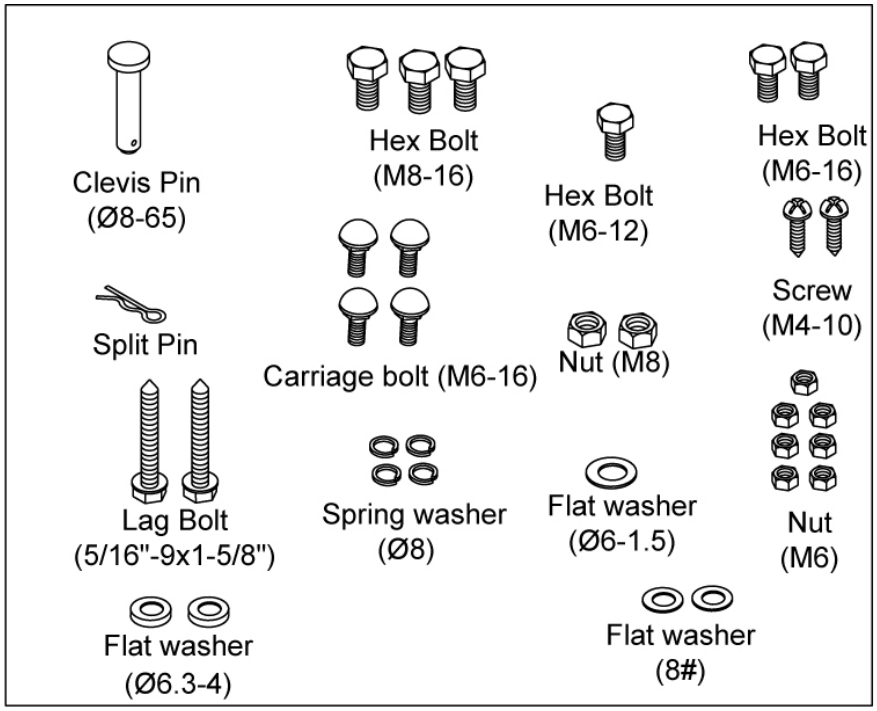
Clevis Pin
(Ø8-65)
Hex Bolt
(M8-16)
Hex Bolt
(M6-12)
Hex Bolt
(M6-16)
Screw
(M4-10)
Split Pin
Carriage bolt (M6-16)
Nut (M8)
Lag Bolt
(5/16"-9x1-5/8")
Spring washer
(Ø8)
Flat washer
(Ø6-1.5)
Nut
(M6)
Flat washer
(Ø6.3-4)
Flat washer
(8#)

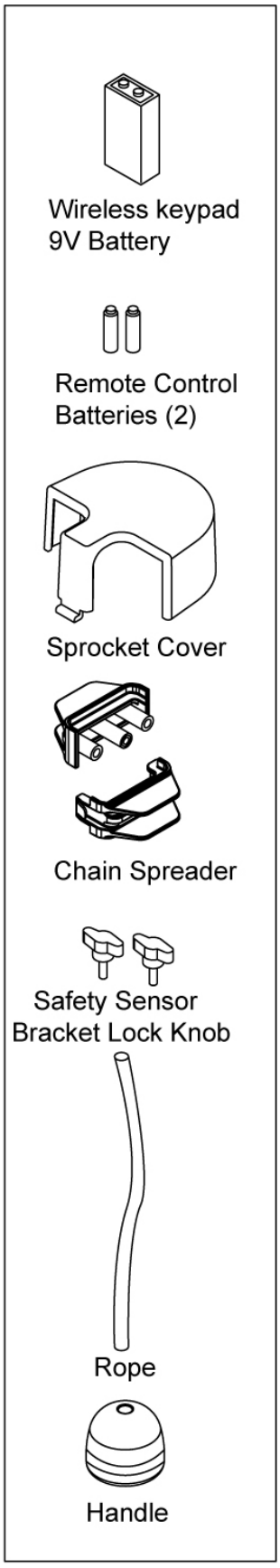
Wireless keypad
9V Battery
Remote Control
Batteries (2)
Sprocket Cover
Chain Spreader
Safety Sensor
Bracket Lock Knob
Rope
Handle

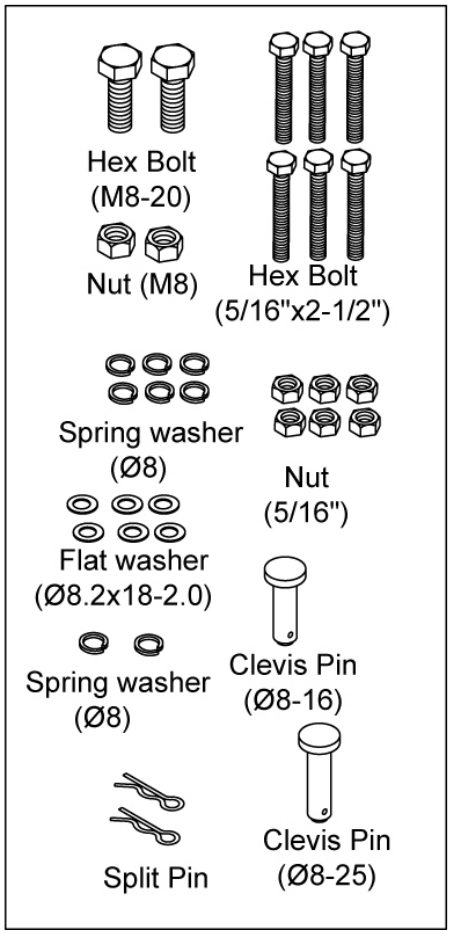
Hex Bolt
(M8-20)
Nut (M8)
Hex Bolt
(5/16"x2-1/2")
Spring washer
(Ø8)
Nut
(5/16")
Flat washer
(Ø8.2x18-2.0)
Spring washer
(Ø8)
Clevis Pin
(Ø8-16)
Split Pin
Clevis Pin
(Ø8-25)

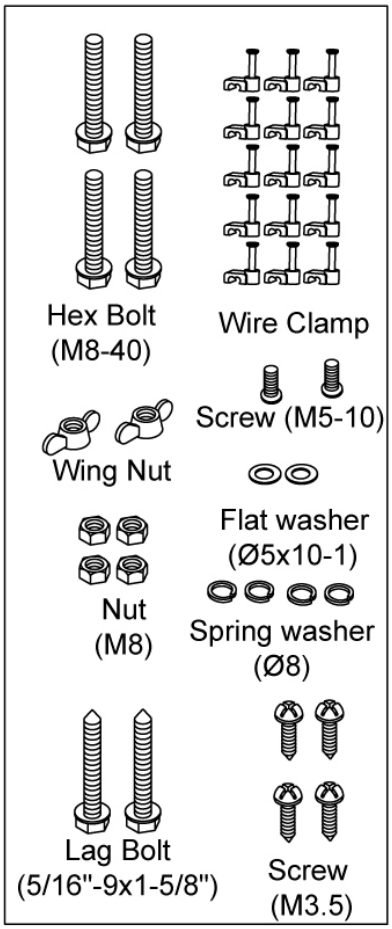
Hex Bolt
(M8-40)
Wire Clamp
Screw (M5-10)
Wing Nut
Flat washer
(Ø5x10-1)
Nut
(M8)
Spring washer
(Ø8)
Lag Bolt
(5/16"-9x1-5/8")
Screw
(M3.5)

Tools Required for Assembly

To make sure the installation goes smoothly, have the following tools on hand before you begin:

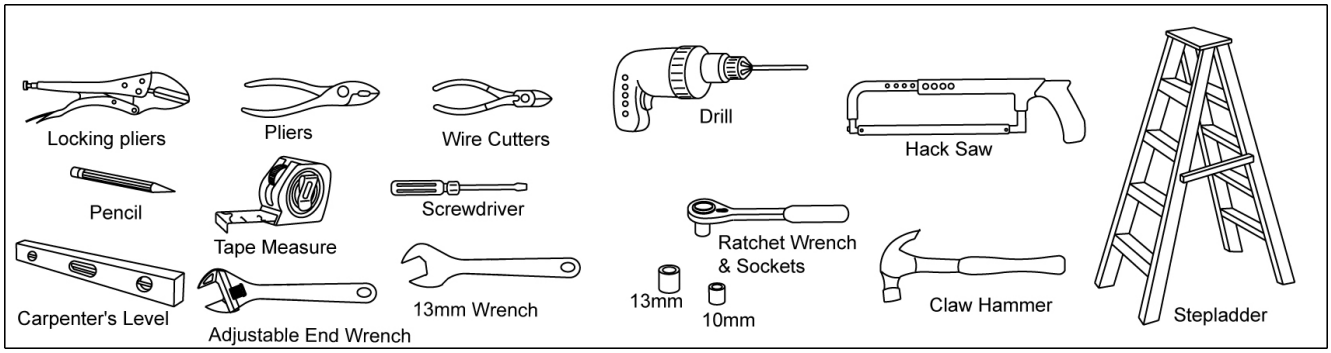

Materials Not Included In The Carton

You may need additional hardware (not included) to install this garage door opener, depending on your particular situation:

- Additional brackets are needed to secure the garage door opener to the door or frame if the door is more than 7 feet tall or if there is not a suitable mounting surface near the door opener.
- The safety reversal system will not work if there is more than ¼" space under the door due to uneven driveway, warped or broken door, etc. Fix such conditions before installing your door opener.
- Thin, aluminum or brittle wood doors may require additional brackets or support.

Safety Precautions

⚠ WARNING

Be sure to follow safety precautions while installing your garage door opener:

- To reduce the risk of electrical shock, do not install electrical equipment when standing in water or on a wet driveway or garage floor.
- Be sure to securely fasten the garage door opener to the garage door and to the ceiling. Failure to secure the garage door opener can lead to damaged property or personal injury or death.
- Be sure to properly adjust the emergency reversal system. A poorly installed or adjusted emergency reversal system will not work and may result in property damage or personal injury or death.
- Keeps fingers, hands, etc. away from moving parts. Do not touch moving garage door opener parts.
- Do not stand under the garage door when adjusting & operating the opener.

Preparing The Installation Site

You need a minimum of 2” clearance between the top of the garage door opener rail and ceiling. Make sure there is enough room and no obstructions where the garage door opener will be installed.

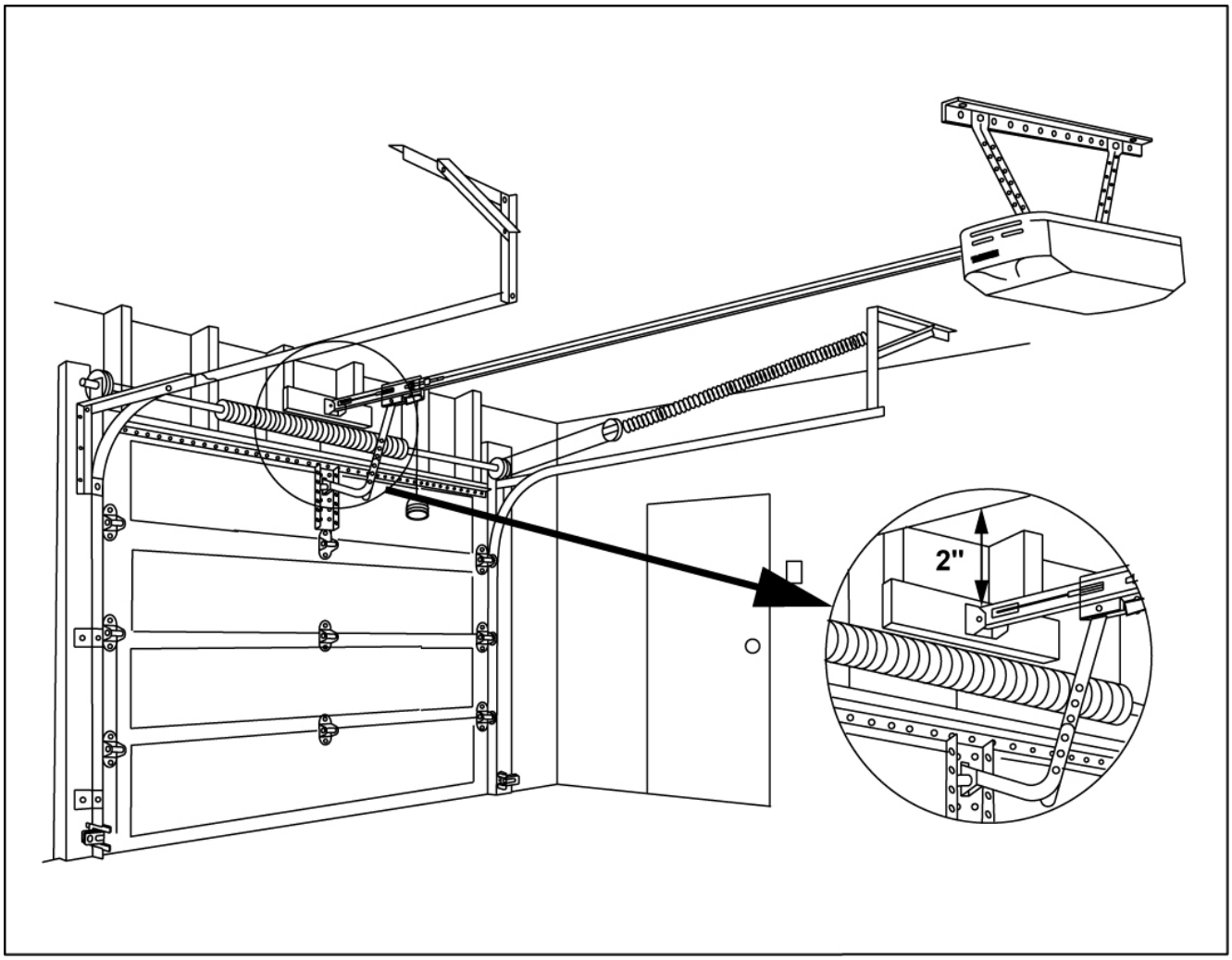

Assembling Rail Components

Assembling the garage door opener rail components are completed in three main steps:

A) Attaching the Trolley & Header Bracket to the Rail

B) Attaching the Rail to the Motor Assembly

C) Attaching the Chain to the Motor and Rail Assembly

A) Attaching the Trolley & Header Bracket to the Rail

⚠ WARNING To avoid **injury** or **death**, be sure to **securely** assemble garage door opener components.

1. Slide the Inner Trolley into the Outer Trolley until it snaps into place.

Inner Trolley

Outer Trolley

2. Slide the Trolley onto the rail exactly as shown.

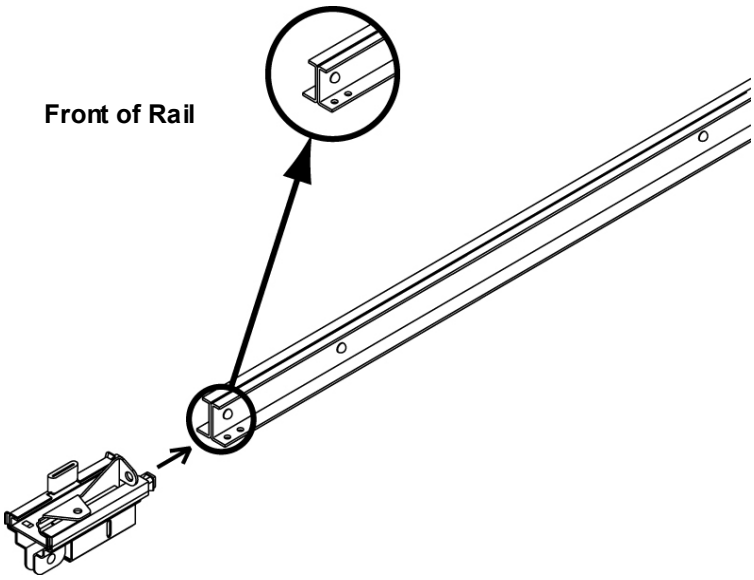

3. Secure the Header Section to the rail using four carriage bolts (M6-16) and four nuts (M6). Position header so the square holes are at the bottom of the rail.

B) Attaching the Rail to the Motor Assembly

⚠WARNING To avoid **injury** or **death**:

- Be sure to **securely** assemble garage door opener components.
- Never touch any moving part while the garage door opener is in operation.
- Do not attempt to fix the garage door opener if it jams or malfunctions. Call a garage door installation professional for assistance.
- Keep fingers and hands away from all moving parts.
- Do not attempt to operate the garage door opener at this time.

1. Remove the motor assembly and place it gear-side-up on a towel or other surface that won't scratch the housing.

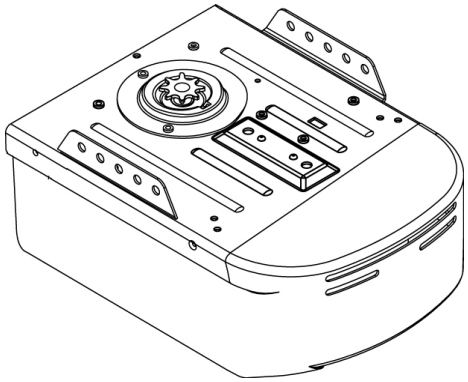

2. Attach the rail section to the motor assembly using three hex bolts (M8-16) and three spring washers (∅8).

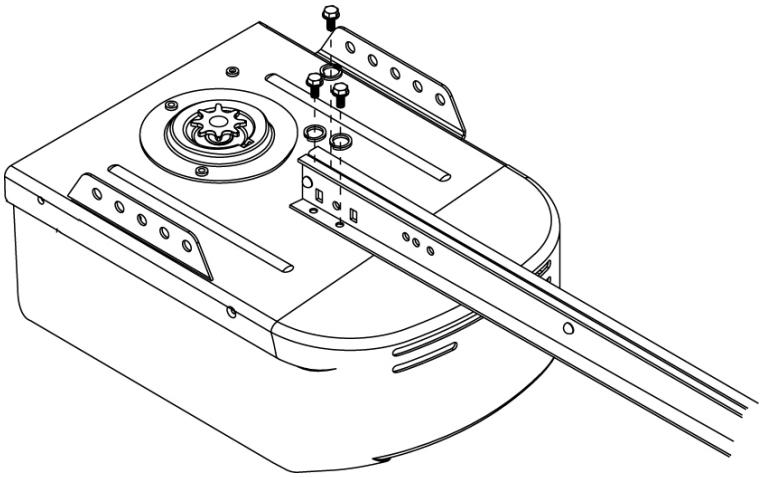

3. Attach the two chain spreaders to the end of the rail with one screw (M4-10) and flat washer (#8) for each spreader.

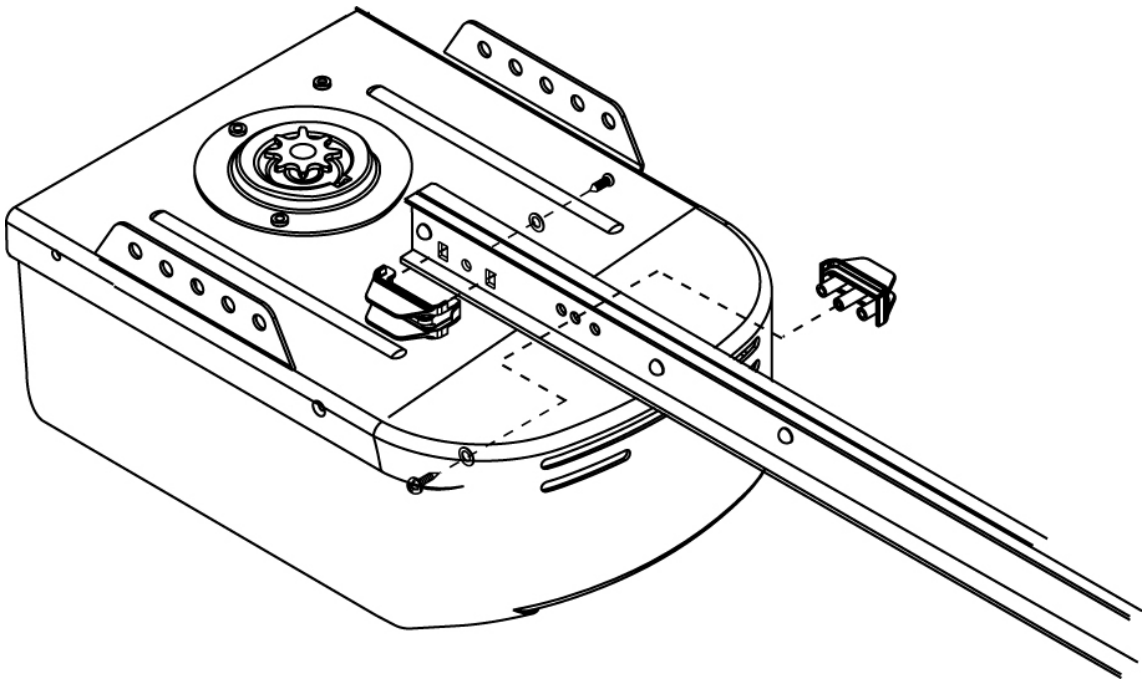

C) Attaching the Chain to the Motor and Rail Assembly

WARNING To avoid **injury** or **death**:

- Be sure to **securely** assemble garage door opener components.
- Never touch any moving part while the garage door opener is in operation.
- Do not attempt to fix the garage door opener if it jams or malfunctions. Call a garage door installation professional for assistance.
- Keep fingers and hands away from all moving parts.
- Do not attempt to operate the garage door opener at this time.

1. Attach a pair of locking pliers to the rail 8 inches away from the center of the gear on the header section as shown to hold the trolley in position when attaching the chain.

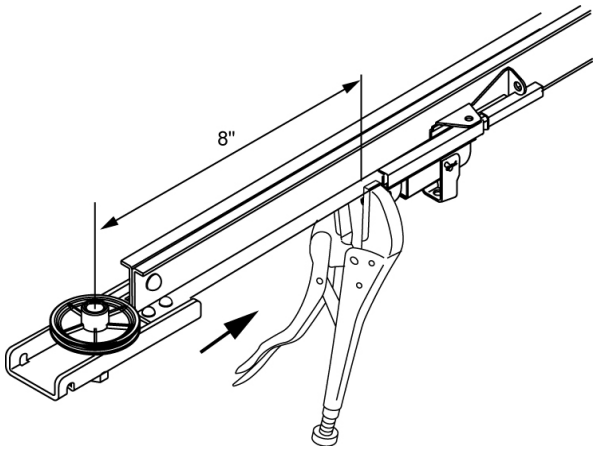

2. Pull the emergency release lever on the Outer Trolley and separate it from the Inner Trolley.

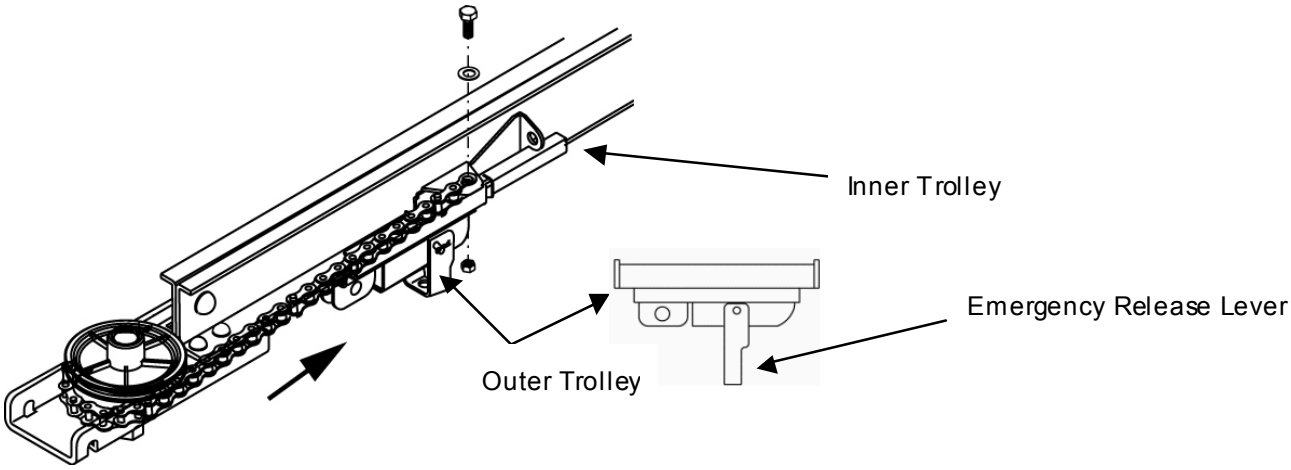

a. Connect the end of the chain with the cable loop to the Inner Trolley by placing one washer (∅6-1.5) onto one (M6-12) bolt, then place the cable loop onto bolt and insert bolt through the mounting hole on the inner trolley as shown. Thread one (M6) nut onto bolt and tighten. Make sure cable loop is straight when tightening.

3. Slide the Inner Trolley and Outer Trolley back together.

4. Attach a pair of locking pliers 8 inches away from the center of the pulley to the rail as shown to keep the trolley from moving when you attach the chain. Then pull on the cable until the trolley is snug against the locking pliers:

5. Hold on to the chain and pull the slack out of the cable. Then wrap the chain around the sprocket as shown:

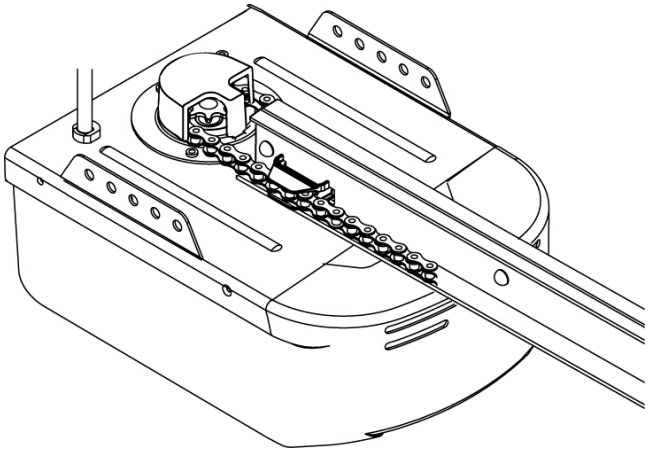

6. Thread 1 nut (M-8) and place one spring washer (∅8) onto the trolley bolt at the end of the Chain

7. Insert the trolley bolt through the mounting hole as shown, and thread on the second nut (M-8) as shown.

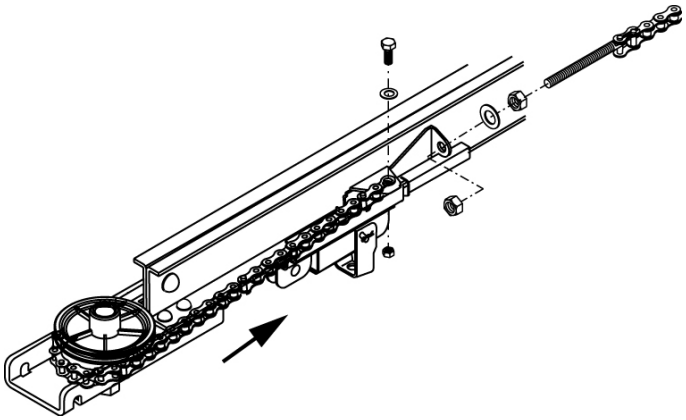

8. **Adjust the chain tension** by turning the outer nut with a 13mm wrench until the chain is ½ inch away from the bottom of the rail at the midpoint of the rail. **Caution:** Use a second wrench to hold the chain from twisting during assembly.

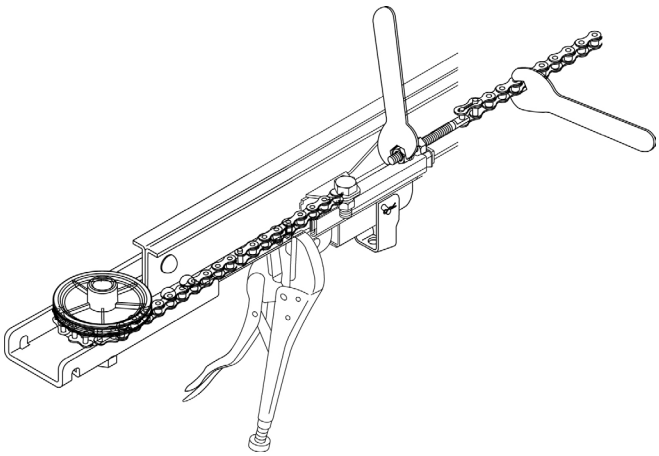

9. While holding the outer nut in position, tighten the inner nut securely to hold the proper chain tension.

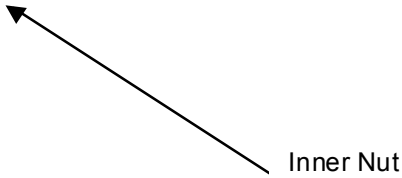

Mounting the Assembled Garage Door Opener

Mounting the assembled garage door opener is done in three main steps:

- Attach the Rail to the Wall
- Attach the Motor Assembly to the Ceiling
- Attach the Door Brackets to the Garage Door and Garage Door Bracket

Attach the Rail to the Wall – Sectional & One Piece Doors

⚠ WARNING To avoid **injury** or **death**:

- Be sure to **securely** mount the garage door opener.
- Never touch any moving part while the garage door opener is in operation.
- Do not attempt to fix the garage door opener if it jams or malfunctions. Call a DGO installation professional for assistance.

1. The first step is to determine where to attach the wall bracket. How you do this depends on whether you have a sectional garage door on rails or a one piece garage door.

   If you have a ***sectional garage door***, do the following:

   a. Open the door to the highest point of travel. In the center of the wall above the door, draw a horizontal line 2" above the high point of the garage door. This height will provide travel clearance for the top edge of the door.

If you have a o***ne-piece garage door***, do the following:

a. Open your door to the highest point of travel as shown. Measure the distance from the top of the door to the floor. Subtract the actual height of the door. Add 8” to the remainder. For example:

91” = Distance from top of door at highest point of travel to floor

87” = Actual height of door

91” – 87” = 4” remainder

4” + 8” = 12”

d. Close the door and draw an intersecting horizontal line on the header wall at the determined height from the top of the closed door.

NOTE: If there is not enough room or if there is no way to secure the garage door opener to the wall over the spring, you can secure it to the ceiling above the door. Mark the center of the ceiling, no more than 6 inches from the wall.

2. Mount the Header Bracket with two lag bolts provided to either the wall or the ceiling

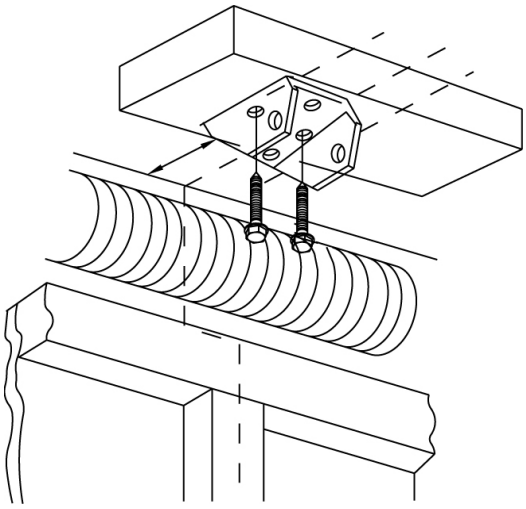

OR

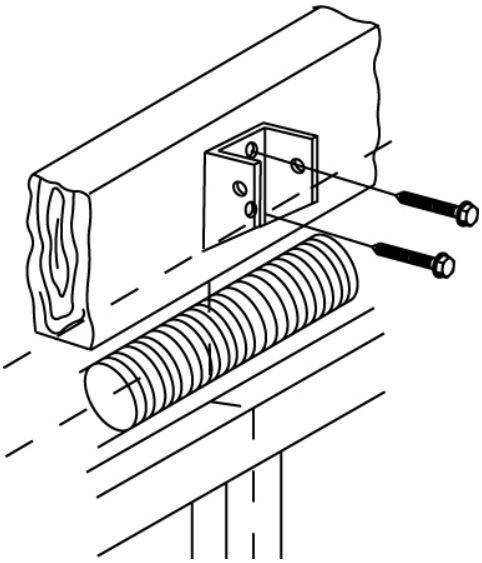

3. Lay the rail against the wall (or ceiling) mount and rest the motor assembly on something tall such as a ladder which is enough to support the rail so it does not touch the garage door spring. Some garage doors require this height to attach the rail to the header bracket. Other doors which do not have the door spring located directly above the garage door, may allow you to rest the opener on the carton it was shipped in to ease assembly.

4. Then attach the rail front to the wall mount with the Ø8-35mm clevis pin and split pin as shown.

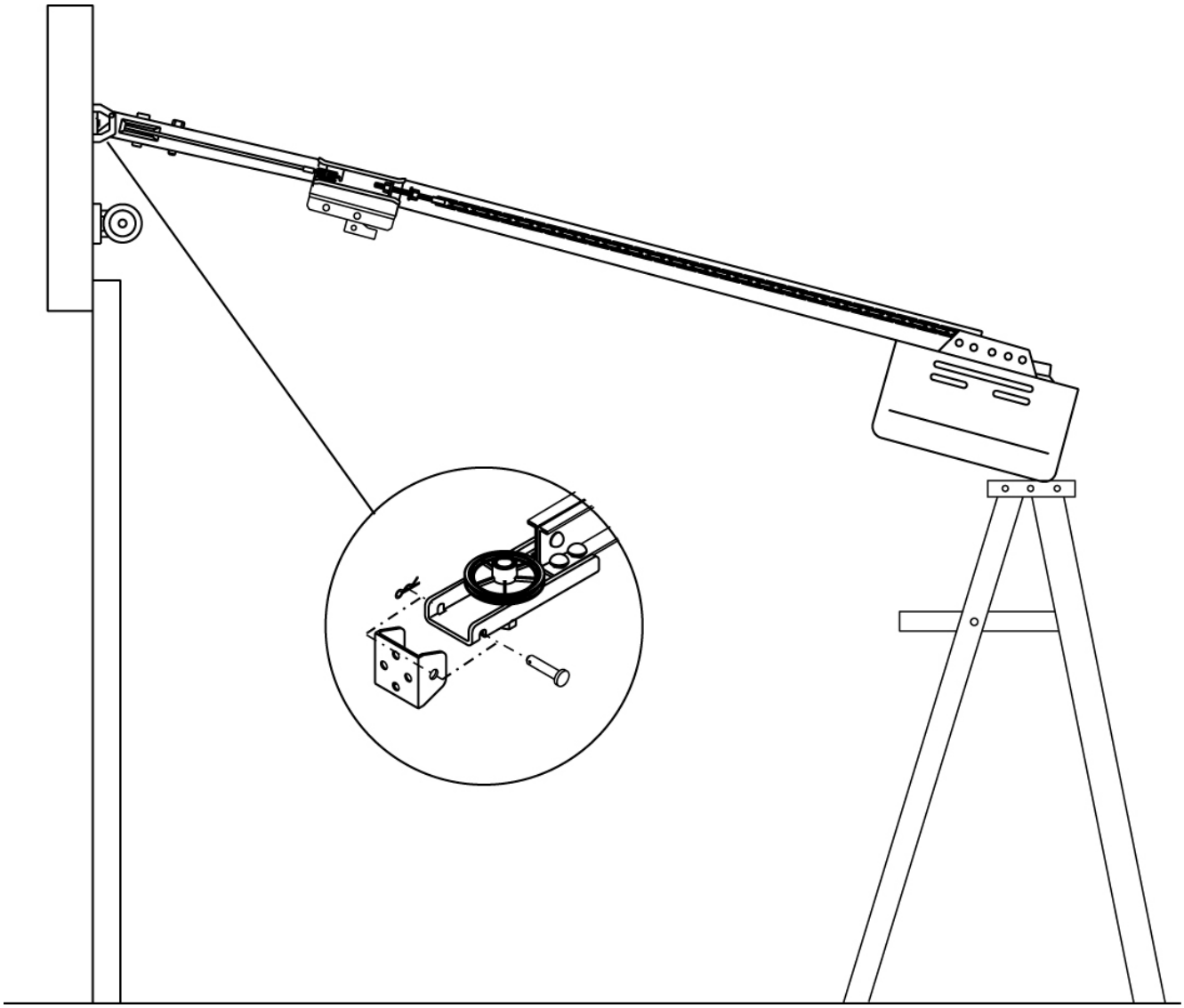

Attach the Motor Assembly to Ceiling

WARNING To avoid **injury** or **death**:

- Be sure to **securely** mount the garage door opener. Failure to mount the garage door opener securely can result in damage to property, personal injury and death.

- Never touch any moving part while the garage door opener is in operation.

- Do not attempt to fix the garage door opener if it jams or malfunctions. Call a garage door installation professional for assistance.

- Do not plug in the electrical cord until specifically instructed to do so.

1. While another person steadies the garage door opener, position the hanging brackets on either side of the motor assembly where they will reach beams in the ceiling overhead. If needed, cut the brackets to fit. Then attach the brackets with the M8-20 bolts, spring washers and M8 nuts as shown, and hand-tighten the screws. (Do not securely tighten the screws as you may need to adjust them when securing the motor to the ceiling in the next step.)

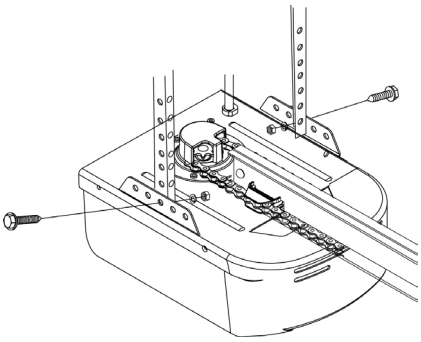

3. Then attach the brackets to the overhead beams with the 2 lag screws.

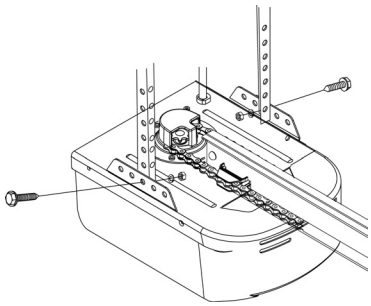

NOTE: In some cases you may need additional hardware (not included) to secure the garage door.

3. Finish tightening the screws on the motor assembly until the garage door opener is securely mounted.

A) Install Safety Sensors and Remote Switches

Installing the door sensors and remotes is done in three main steps:

A) Install the Safety Reversing Sensors

B) Install the Premium Control Console

C) Install the Keyless Entry Control Pad

Install the Safety Reversing Sensors

⚠ WARNING To avoid **injury** or **death**: Be sure to correctly install the safety sensors. Failure to correctly install the safety sensors may result in malfunction of the emergency reverse system which can result in damage to property, personal injury and death.

The garage door opener comes with two safety reversing sensors designed to stop the door from closing should anything be in the way.

NOTES:

-The garage door will not operate unless the safety sensors are installed properly.

-When the invisible beam path is obstructed or misaligned while the door is closing, the door will reverse. If the door is already open, it will not close. The door opener lights will flash.

Do the following to install the sensors.

1. Measure a point on the garage door wheel tracks six inches above the floor where the sensors will go: Repeat on the other wheel track.

2. To attach the safety sensor bracket, hook the bottom edge of the bracket on the back side of the wheel track and pull until the bracket snaps onto the track. Then secure the bracket to the rail with the knobs. Repeat to install the other bracket on the other wheel track.

NOTE: If your garage door is a one-piece door, secure the sensors directly to the wall with two M4-20 screws.

3. Attach each of the two sensors to the sensor bracket using an M5 screw, flat washer, and a wing nut.

Note the “Sending/Transmitting” sensor marked with a “T” and “Receiving” sensor marked with an “R” for the next step.

4. Run the wires back to the garage door motor assembly. Open the side panel on the garage dooropener and connect the wires as shown:

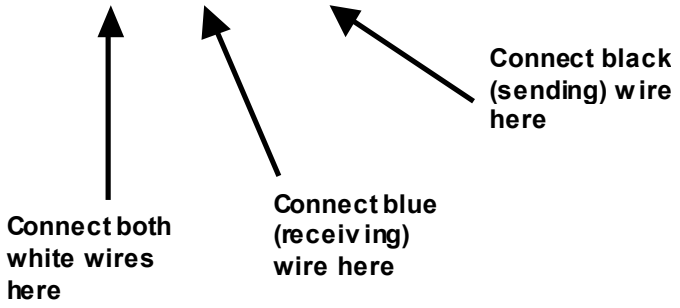

5. Then secure the wires to the wall and ceiling with the included wire clamps.
6. Finally, make sure the sensors are aligned and in line with each other. Verify alignment by looking at the green light on the sending/transmitting sensor which will light consistently without flickering when alignment is achieved.

B) Install the Door Bell

1. Position the control console near the inside door into the garage. Approximately five feet above the floor to keep out of the reach of small children.

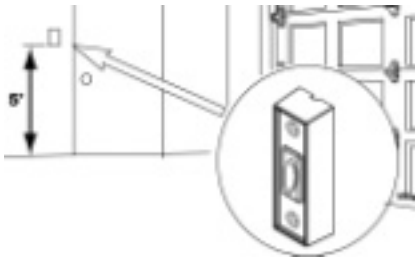

2. Pull the insulation off the ends of the bell wire, then attach the two ends to the back side of the console as shown.

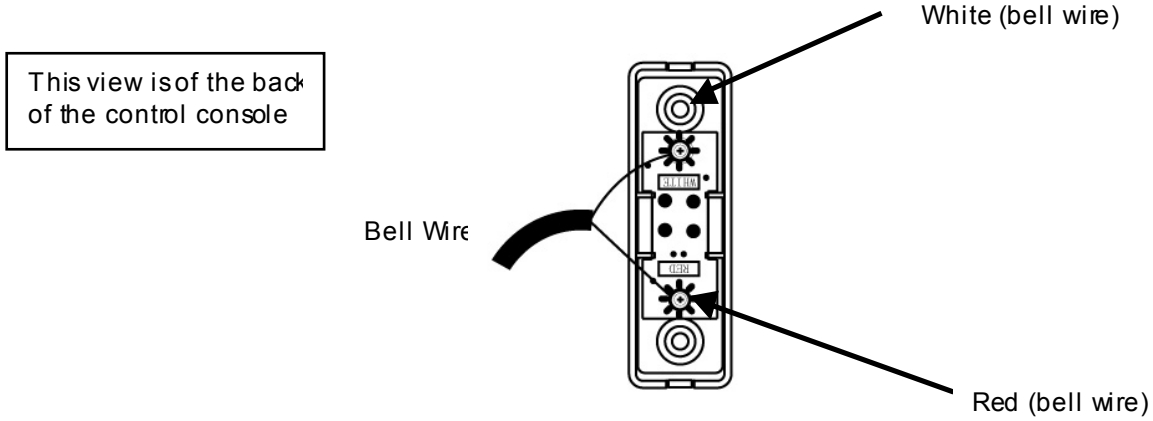

3. Attach the door bell to the wall with two screws (M4 -20).

NOTE: Do not over-tighten the screw or you could damage the console.

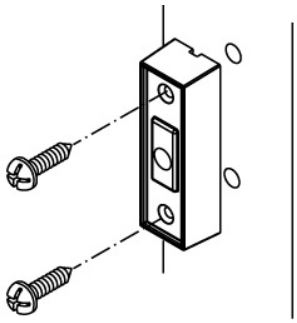

4. Run the wires back to the garage door motor assembly. Open the side panel and connect as shown:

NOTE: Be sure to connect the wire with the dotted line to…

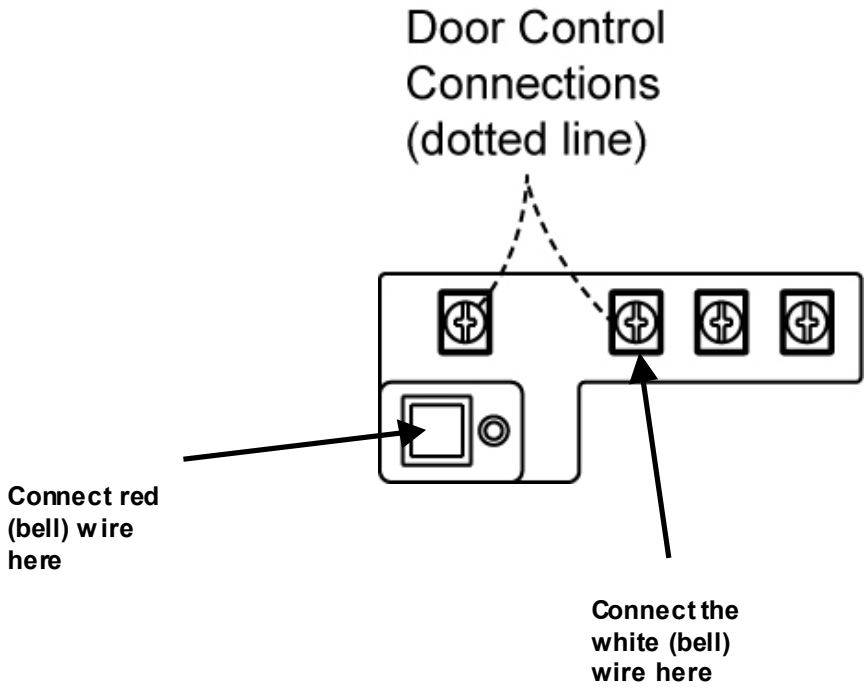

C) Install the Keyless Entry Control Pad

1. Position the keyless control pad outside of the garage door on the inside door frame and secure with the two M4-20 screws. **NOTE:** Be sure the pad is not in the path of the garage door.

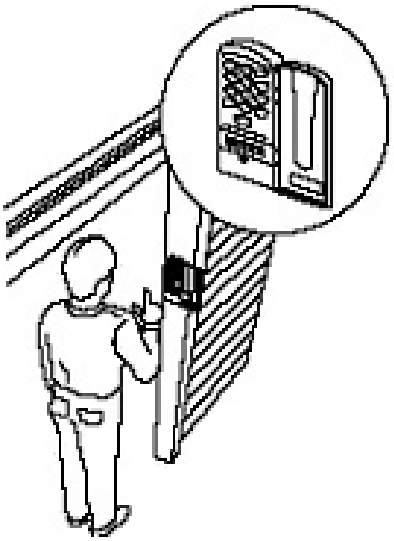

2. Remove the lower panel of the keyless control pad, insert the 9V battery, and close the lower panel.

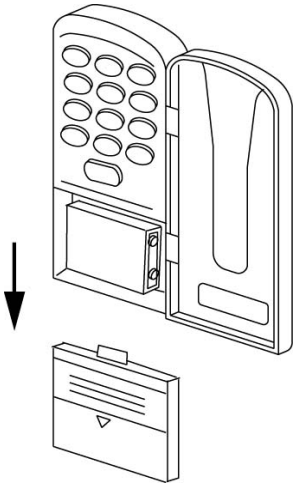

Attach the Door Brackets to the Garage Door and Garage Door Bracket

WARNING: To avoid **injury** or **death**:

- Be sure to **securely** mount the garage door opener. Failure to mount the garage door opener properly can result in damage to property, personal injury and death.

- Never touch any moving part while the garage door opener is in operation.

- Do not attempt to fix the garage door opener if it jams or malfunctions. Call a garage door installation professional for assistance.

- Do attempt to operate the garage door opener at this time.

- Determine where to attach the door bracket based on your garage door application (one-piece or sectional)

For Sectional Doors:

1. Mark a continuing centerline on the garage door face as you marked for the header bracket (see Fig.A).
2. Position the door bracket onto the garage door face (note the "UP" position) approximately 2"-4" below the top edge of the door, and directly below any structural supports located on the top of the door.
3. Mark and drill (4) 5/16" holes for the door bracket mounting bolts as shown.
4. Place 6 Flat Washers (∅10 x 20-2) onto 6 Hex Bolts (5/16" x 18 x 2-1/2"), insert them through the garage door, from the outside. Next, place 6 Spring Washers (∅8), and 6 Nuts (5/16") onto the six mounting bolts and tighten.

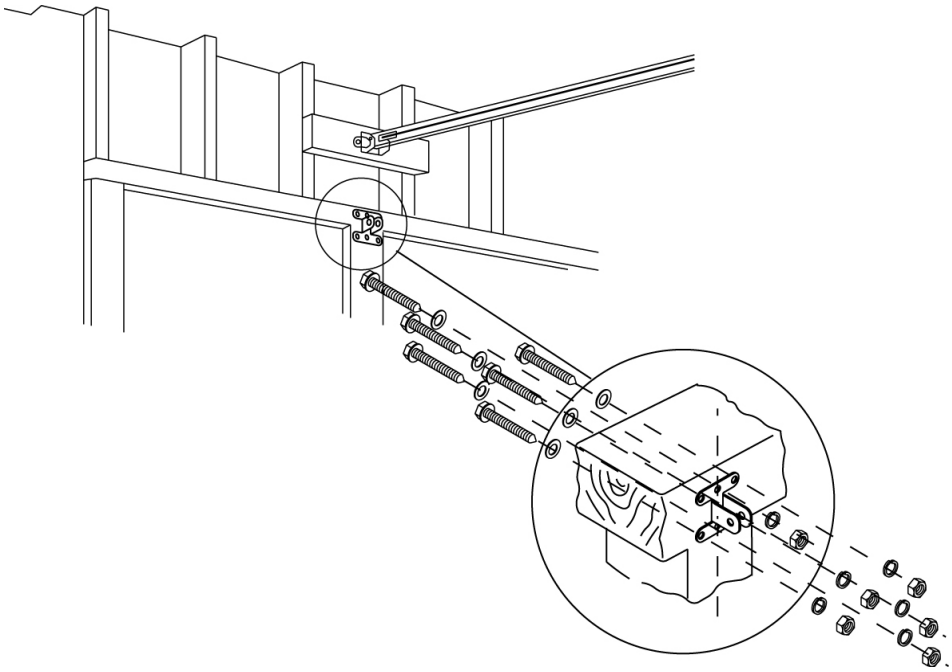

Fig. A
Sectional Door

5. Attach the curved bracket to the door bracket with the clevis pin (Ø8-35) and split pin as shown:

6. Raise the trolley safety release lever to the up/locked position, and slide the outer trolley onto the inner trolley so they lock into position as shown:

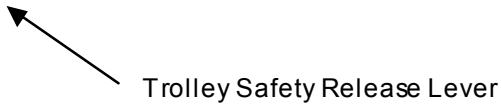

7. Attach the straight door arm section and attach with clevis pin (Ø8-25) and split pin as shown:

8. Bring the straight door arm section and curved door arm section together and secure with two bolts (M6-45), two spring washers and two nuts (M8):

9. Release/lower the trolley safety release lever into the horizonal position.

10. Feed the free end of the emergency release rope through the end of the trolley safety release lever and tie a knot in both the ends of the rope. The knob should be at least six feet above the garage floor. Take the slack out of the rope with an additional knot.

For One-Piece Doors:

1. Mark a centerline on the top of the garage door as you marked for the header bracket (see Fig. B).

2. Position and center the door bracket onto the top of the garage door, mark and drill (2) 5/16" holes for the left and right side of the door bracket (see below).

3. Place 2 Flat Washers (∅10 x 20-2) onto 2 Hex Bolts (5/16" x 18 x 2-1/2"), insert them through the bottom of the garage, and through the top as shown. Next, place 2 Spring Washers (∅8), and 2 Nuts (5/16") onto the four mounting bolts and tighten.

Fig. B
One-Piece Door

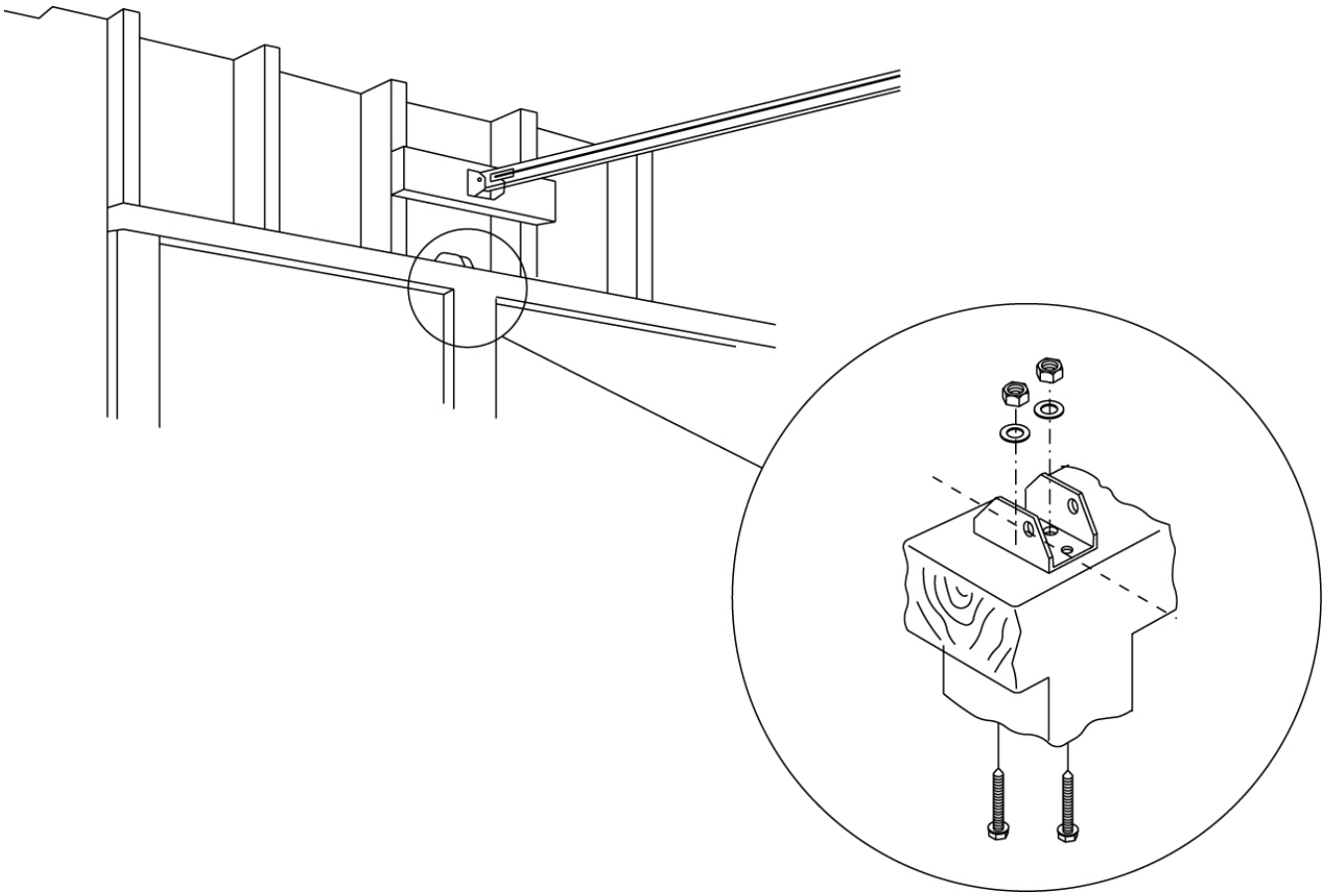

4. Attach the straight bracket to the curved bracket with the longest possible length, so there is a 3-hole overlap as shown below. Secure the two sections together with two bolts (M6-45), two spring washers and two nuts (M8).
5. Fasten the end of the straight arm section to the door bracket using the clevis pin (∅8-35) and split pin as shown.

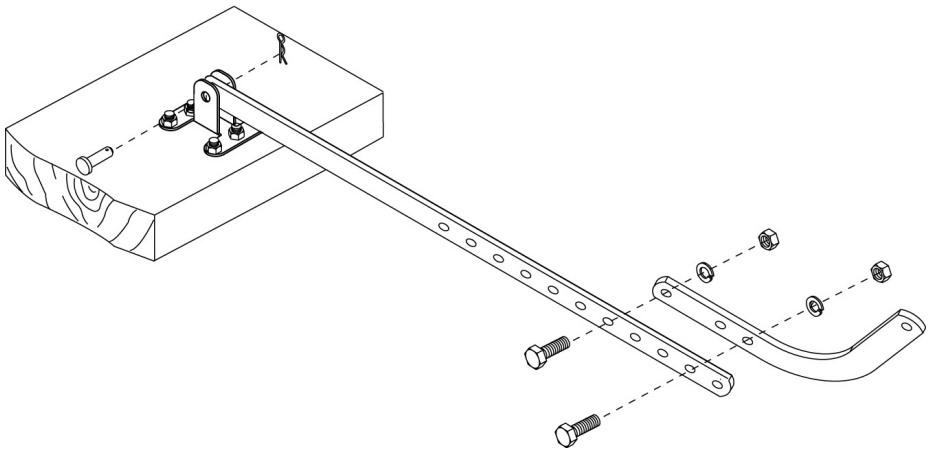

Note: Before connecting the door arm to the trolley, you must adjust the up and down travel limits first. One full turn on the travel adjustment screws equals approximately 2" of travel adjustment. For further travel limit adjustment description, refer to "Testing & Adjusting the Door Range of Motion" ahead.

Adjusting the UP Travel Limit: (see next page for drawing)

1. Turn the UP travel adjustment screw counterclockwise 5 complete turns (increasing the UP travel limit)
2. Press the door control push button on the Premium Control Console so the trolley will travel to the fully open position.
3. Manually raise the door to the open position so the door is parallel with the garage floor. If the door has a downward slope when opened, you have opened the door too far. The end of the curved arm section should be close to the trolley door arm connector hole.
4. If the arm does not extend far enough to attach to the trolley, adjust the travel limit further.

Adjusting the DOWN Travel Limit: (see next page for drawing)

1. Turn the DOWN travel adjustment screw clockwise 5 complete turns (decreasing the DOWN travel limit)
2. Press the door control push button so the trolley will travel the fully closed position.
3. Manually close the door all the way. The end of the curved arm section should be next to the trolley door arm connector hole.
4. If the arm does not extend far enough to attach to the trolley, adjust the travel limit further.

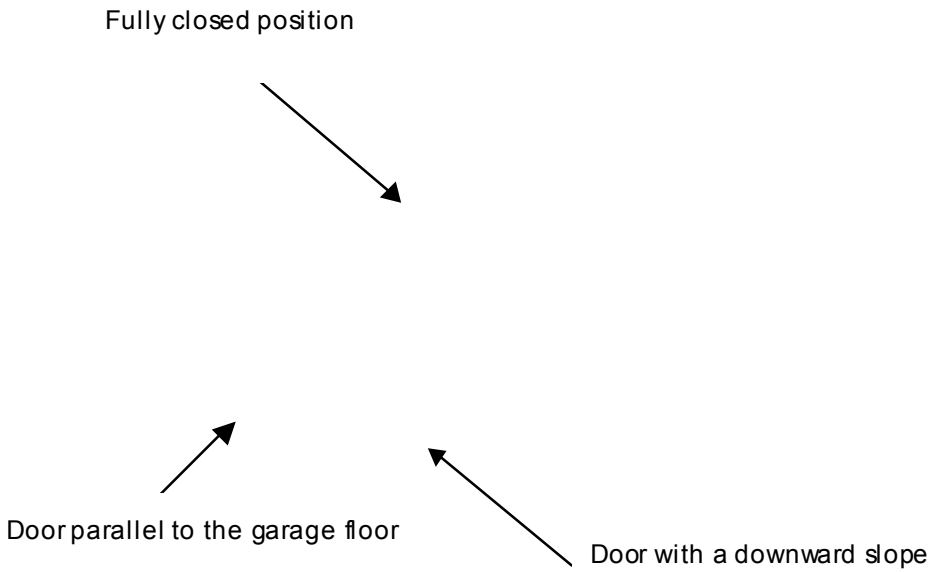

Connect the Door Arm to the Trolley:

1. Close the door and connect the end of the curved arm section to the connector hole on the trolley with a clevis pin (∅8-25) and split pin.
2. Run the opener through a complete travel cycle before making any adjustments. If the door has a downward slope in the full open position as shown above with the dotted line drawing, decrease the UP limit travel until the door is parallel with your garage floor (see Testing & Adjusting the Door Range of Motion) on the next page.

Testing and Adjusting the Garage Door Opener

Testing and adjusting garage door opener is done in five steps:

A) Adjusting the Chain Tension

B) Testing and Adjusting the Door Range of Motion

C) Testing and Adjusting the Safety Reversing Sensors

D) Testing and Adjusting Door Force

E) Testing and Adjusting the Safety Reverse Feature

A) Adjusting the Chain Tension

After you have adjusted the travel distance and force of the garage door opener, verify that the chain tension is still ½ inch away from the bottom of the rail at the chains lowest point.

Note: This is to be tested with the trolley disengaged. (see page 11 for detailed instructions)

B) Testing and Adjusting the Door Range of Motion

This section describes how to adjust the total range of motion for the garage door opener.

Check if Adjustments are Needed

1. Plug in the power cord into an approved power source.
2. Press the Door Control push button. Run the opener through a complete travel cycle.
   - Does the door open and close completely?
   - Does the door not open or close too far?
   - Does the door stay closed and not reverse unintentionally when fully closed?

   If your door passes both of these tests, no limit adjustments are necessary. Go to next section on Testing and Adjusting the Safety Reversing Sensors

Adjust Range of Motion

WARNING To avoid **injury** or **death**:

- Be sure correctly adjust the door range of motion. Failure to correctly adjust the door range of motion may result in malfunction of the emergency reverse system, which can result in damage to property, personal injury and death.

- Do not stand under the garage door opener when adjusting the door range of motion.

If adjustments are needed, follow the adjustment procedures outlined below:

Check each of the following:

1. If the door does not open completely, increase the "up travel" distance by rotating the adjusting screw clockwise. Locate the two adjustments on the bottom center of the motor housing:

   Use a flathead screwdriver to make limit adjustments. Turn the UP limit adjustment screw clockwise as needed. One full turn equals 2” of travel. Run the opener through a complete travel cycle after each adjustment and repeat as needed to fine tune the range of motion.

2. If the door does not close completely, increase "down travel" distance. Turn the down limit adjustment screw counterclockwise. . Locate the two adjustments on the bottom center of the motor housing:

   Use a flat head screwdriver to make limit adjustments. Turn the DOWN limit adjustment screw clockwise as needed. One full turn equals 2” of travel. Run the opener through a complete travel cycle after each adjustment and repeat as needed to fine tune the range of motion.

3. If the opener reverses when it reaches its fully closed position, decrease down travel by adjusting the downward travel limit screw clockwise.

4. If the door reverses when closing and there is no visible interference to the travel cycle, check the door for binding. Pull the trolley emergency release handle and manually open and close the door. If the door is binding or unbalanced, call a trained garage door technician. If the door is not binding or unbalanced, adjust the Down force. See next section:

C) Testing and Adjusting the Safety Reversing Sensors

⚠ WARNING To avoid **injury** or **death**:

- Do not stand under the garage door opener when testing the safety sensors.
- Do not operate the garage door opener if the safety sensors are not working properly.

1. Press the remote control push button to open the door.
2. Place an empty cardboard box carton in the path of the door.
3. Press the remote control push button to close the door. The door should not move. If it does, contact technical support for instructions.
4. Remove the box and press the remote control push button to close the door Place the box in the door's path. The door should automatically reverse. If it doesn't, contact technical support for instructions.

D) Testing and Adjusting Door Force

⚠ WARNING To avoid **injury** or **death**:

- Be sure correctly adjust the door force controls. Failure to correctly adjust the door force controls may result in malfunction of the emergency reverse system, which can result in damage to property, personal injury and death.
- Do not stand under the garage door opener when adjusting the door force controls.
- After any adjustments are made, test the safety reversal system.

Force adjustment settings regulate the amount of power required to open and close the door. If the force adjustment is set too light, door travel may be interrupted in the down direction and stops in the up direction. If it is set too heavy, the door will not emergency reverse fast enough.

Weather conditions can affect the door movement, so occasional adjustment may be needed.

1. Locate the force adjustment controls on the side panel of the motor unit.

The maximum force adjustment range is about ¾ of a complete turn. Do not force controls beyond that point. Turn force adjustment controls with a screwdriver.

2. Test the DOWN (close) force. Grasp the door bottom when the door is about halfway through DOWN (close) travel and try to stop the door. The door should reverse. If the door is hard to hold or doesn't reverse, DECREASE the DOWN (close) force by turning the control clockwise. Make small adjustments until the door completes a close cycle. After each adjustment, run the opener through a complete travel cycle. Do not increase the force beyond the minimum amount required to close the door.

3. Test the UP (open) force. If the door does not open fully INCREASE UP (Open) force by turning the control clockwise. Make small adjustments until door opens completely. Readjust the UP limit if necessary. After each adjustment, run the opener through a complete travel cycle.

E) Testing and Adjusting the Safety Reverse Feature

⚠ WARNING To avoid **injury** or **death**:

- Be sure correctly adjust the safety reversal system. Failure to correctly adjust the door force controls may result in malfunction of the emergency reverse system, which can result in damage to property, personal injury and death.

- Do not stand under the garage door opener when adjusting the safety reversal system.

Your Garage Door Opener comes with a safety feature that makes the door automatically reverse if the door encounters an object before it fully closes.

1. With the door fully open, place a one-inch board (or a 2x4 laid flat) on the floor, cenetered under the garage door. Operate the door in the down direction. The door must reverse on striking the obstruction.

2. If the door stops shy of the obstruction, it is not traveling far enough in the down direction. Increase the DOWN limit by turning the DOWN limit adjustment screw counterclockwise ¼ turn. Repeat until it hits the board and reverses.

3. If the door stops on the obstruction but does not reverse, reduce the DOWN force by turning the adjustment screw counterclockwise ¼ turn. Repeat until it automatically reverses when it hits the board.

Programming the Remote Controls

Your garage door opener has already been programmed at the factory to operate with your hand-held remote control. The door will open and close when you press the first push button.

Below are instructions for programming your opener to operate with additional remote controls.

Programming Remote Control

Using the "Learn" Button on the Garage Door Opener

1. Press and release the "learn" button on the motor unit. The learn indicator light and warning light will glow steadily for 30 seconds.

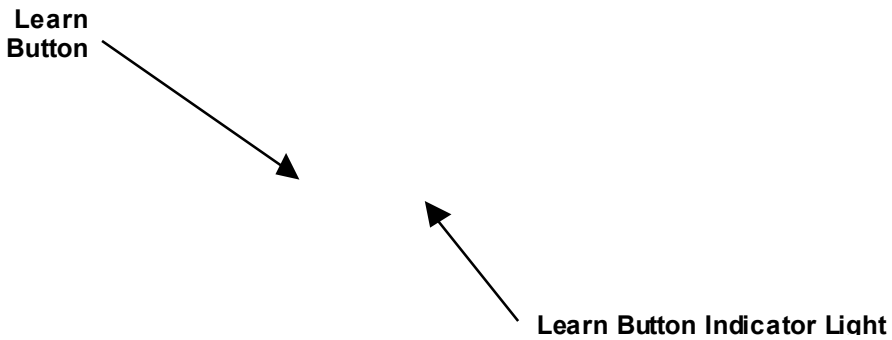

2. Within 30 seconds, press all three push buttons on the remote control then release the buttons. **Note**: learn indicator light will flash slowly.

3. Within 30 seconds, press and hold the button on the handheld remote that you wish to operate your garage door for 3 seconds and release. **Note**: Learn indicator light will blink rapidly and stop.

Erasing All Codes From Garage Door Opener Memory

To deactivate any unwanted remotes, first erase all codes. Push the Learn button and hold for approximately 6 seconds. All previous codes are now erased.

Reprogram each remote or Keyless entry you wish to use.

Adding or Changing a Keyless Entry Code

The keyless entry control panel and garage door opener must be programmed with a code in order to operate your garage door opener with the keyless entry.

Adding a New Code

Using the "Learn" Button on the Garage Door Opener

1. Press and release the “learn” button on motor unit. The learn indicator light and warning light will glow steadily for 30 seconds

2. Within 30 seconds, enter a four digit personal identification number (PIN) of your choice on the keypad. Then press and hold the ENTER button for 3 seconds.

3. The learn indicator light will flash rapidly and the warning light will flash 3 times. Your Wireless Keypad has now learned the code.

4. Test by pressing the new PIN, then press Enter. The garage door opener should operate.

To Change an Existing Code

If the existing code is known, it may be changed by using the Keyless Entry.

1. Enter the four buttons for the present PIN, then press and hold the # button. The warning light will glow steadily. Release the # button.

2. Within 15 seconds, press the new 4-digit code you have chosen, then press and hold Enter for 3 seconds. The warning light will blink twice, then blink rapidly and stop. The new code is now programmed.

3. Test by pressing the new PIN, then press Enter. The garage door opener should operate.

To Add a Guest Entry (Temporary) PIN

A Guest Entry PIN can be added to your Keyless Entry Pad which allows you to authorize access by visitors or service people by addiding a temporary 4 digit PIN.

1. Press the 4 buttons for your personal entry Master PIN, then press and hold the * button until the warning light stays on.
2. Within 15 seconds, press the 4 buttons for your personal Guest Entry PIN (can not set as 0000), then press and hold the ENTER button.
3. The warning light will blink twice when the Guest Entry PIN has been added successfully. If you input an incorrect code more than ten times continuously, the Keyless Entry Pad would stop working for fifteen minutes. During the fifteen-minute pause, the warning light will blink consistently. However, you can use the Hand-Held Remote or the Control Console to recall the Keyless Entry to work.

To Erase a Guest Entry (Temporary) PIN

1. Press the 4 buttons for your personal entry Master PIN, then press and hold the * button until the warning light stays on.
2. Within 15 seconds, enter 0000, press and hold the ENTER button.
3. The warning light will blink twice when the Guest Entry PIN has been erased successfully.

Using Your Garage Door Opener

⚠WARNING To avoid **injury** or **death**:

- Never permit children to operate the garage door opener.
- Make sure the area is clear under the door before operating.
- Do not attempted to operate a jammed garage door opener. Consult a garage door opener professional for assistance.
- Do not attempted to repair a jammed garage door opener. Consult a garage door opener professional for assistance.

Be sure to unplug the garage door opener from the electrical source before making any adjustments.

Opening/Closing the Garage Door

Use any of the following to open or close the garage door:

The hand-held remote control:	Hold the dedicated button down until the door starts to move.
The door bell:	Press the lighted push button to open or close the door. Press again to reverse the door during the closing cycle or to stop the door while it's opening.
The keyless entry pad:	Enter the code you programmed into it to activate the door.

Locking Out the Hand-held Remote Controls

You can lock out the hand-held remote controls so the door can only be operated from the wall-mounted control.

- To activate the Lock feature, press and hold the Lock button for 1 second. The light will flash as long as the Lock feature is on.
- To turn off, press and hold the Lock button for 1 second. The push button light will stop flashing.

To Open the Door Manually

To open the door manually, pull the emergency release handle and lift the door manually.

To reconnect the trolley, return the emergency release arm to its original horizontal position. The trolley will re-engage the next time you operate the garage door opener.

Caring for your Garage Door Opener

Maintaining the Opener

Do the following to maintain your garage door opener:

Monthly: Once a month, test that the garage door opener opens and closes properly as seasonal weather change may affect the garage door and garage door opener. If needed, adjust the range of motion and force setting per the instructions on pages 30-31.

Changing Remote Control Battery

Remote Control

To replace the battery in the remote control:

1. Use a flathead screwdriver blade at the bottom of the remote to pry open the case.

2. Take out old battery and Insert a new 23A – 12V battery positive side up as shown.
3. Replace the cover and dispose of the old battery properly.

Keyless Entry Control Pad:

To replace the battery in the keyless entry pad:

1. Remove the lower panel of the keyless entry pad:
2. Take out old battery and dispose of properly.
3. Insert new 9V battery.
4. Close the lower panel.

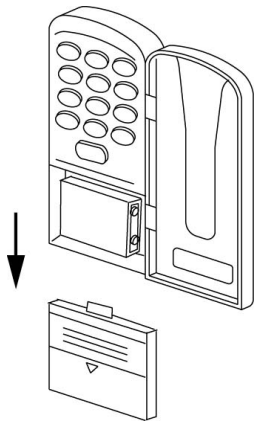

Homelink® Programming

HomeLink is an integrated transceiver (a transmitter and receiver) that can be programmed to activate your garage door opener. HomeLink can be found on over 140 different vehicle models (see your vehicle's owners manual for detailed information).

If your Motor Vehicle is equipped with HomeLink, please follow the below instructions to program:

1. For first time programming with a garage door opener, press and hold all 3 HomeLink buttons for approximately one minute, releasing only when the HomeLink indicator light turns off. (Do not perform this step when programming the additional HomeLink buttons)
2. To ensure HomeLink is in the proper training mode, press and hold each of the buttons individually. When pressed, the individual HomeLink button should make the indicator light blink rapidly for 2 seconds and then turn a solid/continuous light.

A second person may make the following steps quicker & easier. As a safety precaution, DO NOT stand on your vehicle. Use a stepladder or other stable, safe device.

3. At the garage door opener receiver (motorhead unit) in the garage, locate the training button (usually near where the hanging antenna wire is attached to the unit). If there is difficulty locating the training button, please reference the garage door opener's manual, visit their website www.homelink.com or call at 1-800-355-3515.
4. Press and release the training button (which activates the "training" light) NOTE: Once the button is pressed, there are 30 seconds in which to initiate the next step.
5. Return to the vehicle and firmly press and hold the desired HomeLink button to be programmed for two seconds and release. Repeat the "press/hold/release" a second time to activate the door. (You may need to repeat this sequence up to 3 times to complete the training process).

HomeLink should now activate your rolling code equipped opener.

Once programmed, the HomeLink Wireless Control System or the original hand held transmitter may be used to activate this garage door opener. In the event there are still programming difficulties, please contact HomeLink at 1-800-355-3515 or visit their website at www.homelink.com.

It is recommended that upon sale of the vehicle, the programmed HomeLink Wireless Control System buttons be erased for security purposes. To erase the programmed HomeLink buttons, press and hold the two outer HomeLink buttons until the indicator light begins to flash after about 20 seconds.

Homelink® Accessories

If you would like additional information on the HomeLink® Wireless Control System, HomeLink compatible products, programming instructions for other devices or to purchase accessories, please contact HomeLink at 1-800-355-3515 or visit their website at www.homelink.com.

Precautions!

Do not use the HomeLink® Wireless Control System with any garage door opener that lacks the safety stop and reverse feature as required by federal safety standards. (This includes any garage door opener model manufactured before April 1, 1982). A garage door opener that cannot detect an object, signaling the door to stop and reverse, does not meet current federal safety standards. Using a garage door opener without these features increases risk of serious injury or death. For more information, call 1-800-355-3515 or visit their website at www.homelink.com.

This device complies with FCC rules part 15. Operation is subject to the following two conditions: (1) This device may not cause harmful interference, and (2) This device must accept any interference that may be received including interference that may cause undesired operation. WARNING: The transmitter has been tested and complies with FCC and IC rules. Changes or modifications not expressly approved by the party responsible for compliance could void the user's authority to operate the device.

The term "IC:" before the certification/registration number only signifies that Industry Canada technical specifications were met.

Three Button Remote (model 56440) : FCC ID: P66GDR02 / Canada ID: 4278A-GDR02;

Mini Remote Control (model 56550) : FCC ID: P66GDR02M / Canada ID: 4278A-GDR02M;

Keyless Entry Control Pad (model 56330) : FCC ID: P66GDK02 / Canada ID: 4728A-GDK02.

HomeLink and the HomeLink house are registered trademarks of Johnson Controls, Inc.

Troubleshooting

Use the following table to troubleshoot common problems with the garage door opener. If the following does not resolve the problem, contact technial support or a professional garage door opener repairman.

Symptom	Possible Cause	Solution
The garage door opener starts to operate but then stops immedately.	The garage door is locked.	Unlock the door and try again.
	The range of motion setting is incorrect	Adjust the setting per the instructions on page 29.
	The force setting is incorrect.	Adjust the force setting per the instructions on page 31.
	The safety reverse setting is incorrect	Adjust the setting per the instructions on page 32.
	The springs may be old and weak requiring more force to open the door than the opener can provide.	Replace the old and weak springs.
The garage door opener will not operate at all and the light will not turn on.	The opener is not plugged in.	Plug the opener into 110v power outlet.
	The plug the opener is plugged into has no power.	Check the circuit breaker.
The garage door opener will not operate at all but the light *will* turn on.	The safety sensors are not aligned.	Align the sensors per the directions on page 17.
	The wires from the safety sensors are broken or not connected.	Verify the wires are correctly attached to the opener per the instructions on page 17.
	An object is blocking the safety sensors.	Check that nothing is blocking the line-of-site between the two safety sensors. If so, remove it.
The garage door opener does not open fully or close fully.	Something is blocking the garage door.	Remove the obstruction.
	The range of motion setting is incorrect	Adjust the setting per the instructions on page 29.
	The force setting is incorrect.	Adjust the force setting per the instructions on page 31.
	The safety reverse setting is incorrect	Adjust the setting per the instructions on page 32.

Symptom	Possible Cause	Solution
The garage door opener will not open using the remote control.	The battery in the control panel is dead.	Replace the batteries per the instructions on page 36.
	The remote control has not yet been programmed.	Program the remote control per the instructions on page 33.
	The remote controls have been locked out.	Unlock the remote controls per the instructions on page 35.
	All codes have been erased from the opener.	Reprogram the remote control per the instructions on page 33.
The garage door opener will not open using the keyless entry control panel.	The battery in the control panel is dead.	Replace the batteries per the instructions on page 36.
	The keyless entry code has not yet been programmed.	Program the keyless entry code per the instructions on page 33.
	The remote controls have been locked out.	Unlock the remote controls per the instructions on page 35.
	All codes have been erased from the opener.	Program the keyless entry code per the instructions on page 33.
The garage door opener operates but the door doesn't move.	The emergency release handle has been pulled.	Return the emergency release arm to its original horizontal position. The trolley will re-engage the next time you operate the garage door opener.
The chain droops or makes a scraping noise.	The chain tention is not adjusted properly.	Adjust the chain per the instructions on page 11

Parts List and Schematic Diagrams

⚠ WARNING When servicing use only authorized replacement parts. Use of any other parts may create a HAZARD or cause product damage.

⚠ WARNING Any attempt to repair or replace electrical parts on this garage door opener may create a HAZARD unless repair is done by a qualified service technician.

Note: Always order parts by I.D. Number.

Parts List: Schematic A– Rail Assembly and Other Parts

I.D. No.	Description	Size	Qty
2384	SPRING PLATE		2
2385	TROLLEY		1
2386	TROLLEY		1
07TQ	SUPPORT		1
07TR	LINK BAR		1
07TS	LINK BAR		1
07TW	HANDLE	23#	1
07TX	ROPE		1
07TY	DRAW BAR		1
07TZ	COMPRESSION SPRING		1
07U0	LOCATING BAR		1
07U2	DAMPER	6#	1
07UA	SET PLATE		2
07VM	LEAD WIRE ASS'Y		1
0CP0	CLAMP BOLT	6#	2
0J4D	FLAT WASHER	φ5x10-1	2
0J4U	FLAT WASHER	φ6x18-1.5	1
0J50	FLAT WASHER	φ6.3x15-4	2
0J6G	FLAT WASHER	φ8.2x18-2.0	6
0J87	FLAT WASHER	8#x1/2-3/64	2
0J94	SPRING WASHER	φ8	2
0J94	SPRING WASHER	φ8	1
0J94	SPRING WASHER	φ8	3
0J9D	SPRING WASHER	φ8	4
0J9D	SPRING WASHER	φ8	6
0JDT	SPLIT PIN	φ8-27.7	2
0JDT	SPLIT PIN	φ8-27.7	1
0JP4	HEX. HD. BOLT	M 8x1.25-16	3
0JPC	HEX. HD. BOLT	M 6x1.0-12	1
0JPD	HEX. HD. BOLT	M 6x1.0-16	2
0JPU	HEX. HD. BOLT	M 8x1.25-20	2
0JRE	HEX. HD. BOLT	M 8x1.25-40	4
0K90	CR. RE. TRUSS HD. TAPPING SCREW	M 3.5x18-16	2
0KC7	CR. RE. TRUSS HD. TAPPING SCREW	M 4x16-10	2

I.D. No.	Description	Size	Qty
0KD1	HEXAGON WASHER HEAD TAPPING	5/16x9UNC-1 5/8	2
0KD1	HEXAGON WASHER HEAD TAPPING	5/16x9UNC-1 5/8	2
0KHX	CAP HD. SQ.NECK BOLT	M 5X0.8-10	2
0KMY	HEX. NUT	M 8x1.25，T=6.5	2
0KMY	HEX. NUT	M 8x1.25，T=6.5	2
0KPP	HEX. NUT	5/16x18UNC T=6.7	6
0KQ8	WING NUT	M 5x0.8	2
0KQX	NUT CHUCK	M 6x1.0 T=6	4
0KQX	NUT CHUCK	M 6x1.0 T=6	2
0KQX	NUT CHUCK	M 6x1.0 T=6	1
0KR4	NUT CHUCK	M 8x1.25 T=8	4
0LNS	BATTERY		1
0XGV	PIN	φ4-30	1
0XH5	PIN	φ8-16	1
0XH6	PIN	φ8-25	1
0XH7	PIN	φ8-65	1
0XH8	ANF TYPE NAIL FIXED CLIP		15
20ZU	TORSION SPRING		1
214Y	HEX. HD. BOLT	5/16"-18UNC-2 1/2'	6
23AE	GUIDE HOLDER	6#	2
23B2	CAP HD. SQ.NECK BOLT	M 6x1.0-16	4
23BF	CONTROLLER ASS'Y		1
23BG	CONTROLLER ASS'Y		1
23BN	CONTROLLER ASS'Y	BP#	1
23BT	CONTROLLER ASS'Y		1
23C8	CONTROLLER ASS'Y		1
23KH	RETAINING CLIP		2
23LE	CONTROLLER ASS'Y		1
24HQ	SUPPORT		1
27A9	RAIL		1
27AS	WHEEL ASS'Y		1
27AV	CHAIN ASS'Y		1

Schematic A– Rail Assembly and Other Parts

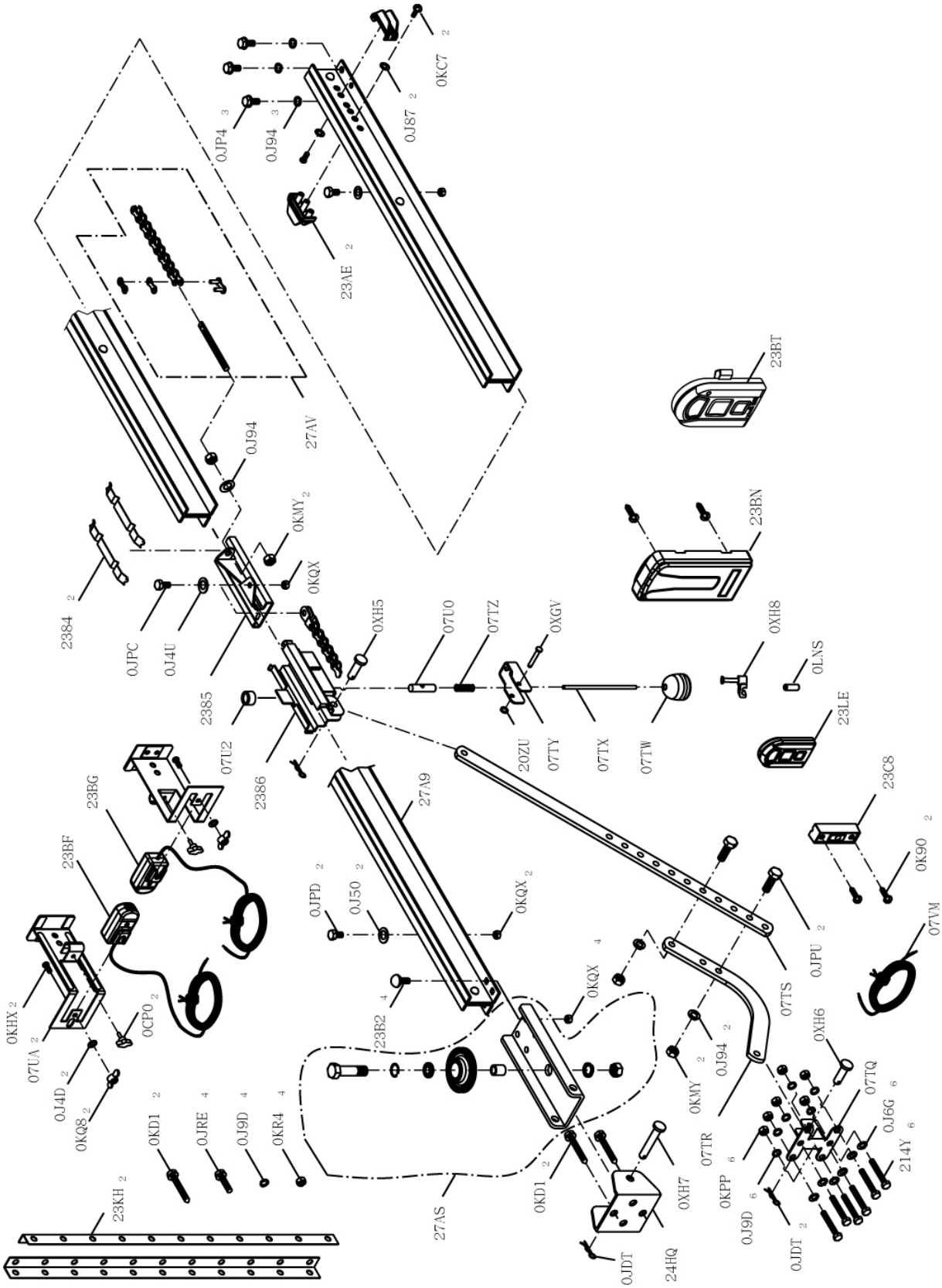

Parts List: Schematic B – Motor Assembly

I.D. No.	Description	Size	Qty
2104	FLAT WASHER		1
2236	SET PLATE		1
2237	SET PLATE		2
2238	SET PLATE		2
07UK	WORM		1
07UM	BUSH		1
07UN	BUSH		1
07UP	SPRING CAP		1
07UQ	PARRLE RING		1
07UR	INTERRUPER CUP	6#	1
07US	SPEED SEAT	6#	1
07UT	CONTROLLER		1
07UZ	COVER	6#	1
07V2	LAMP SOCKET	6#	1
07V3	SIDE COVER	6#	1
07V4	BASE		1
07VE	CAPACITOR ASS'Y		1
07VF	TERMINAL ASS'Y		1
07VN	RETAINING CLIP		1
0JAF	EXTERNAL TOOTH LOCK WASHER	φ5	1
0JB3	WAVE WASHER	WW-14	1
0JCH	SPRING PIN	5-20	1
0JX7	HEX. SOC. SET SCREW	M 6x1.0-6	2
0K6X	CR.-RE. TRUSS HD. SCREW	M 4x0.7-6	1
0K7F	CR. RE. ROUND WASHER HD. SCREW	M 5x0.8-8	1
0K7F	CR. RE. ROUND WASHER HD. SCREW	M 5x0.8-8	1
0K7F	CR. RE. ROUND WASHER HD. SCREW	M 5x0.8-8	3
0K7F	CR. RE. ROUND WASHER HD. SCREW	M 5x0.8-8	4
0K7F	CR. RE. ROUND WASHER HD. SCREW	M 5x0.8-8	4
0K7F	CR. RE. ROUND WASHER HD. SCREW	M 5x0.8-8	4
0K7G	CR. RE. ROUND WASHER HD. SCREW	M 5x0.8-12	6
0K91	CR. RE. TRUSS HD. TAPPING SCREW	M 4x16-12	1
0K94	CR. RE. TRUSS HD. TAPPING SCREW	M 5x12-16	1
0KA9	CR.RE. PAN HD. TAPPING SCREW	M 3x24-10	4
0KB4	CR.RE. PAN HD. TAPPING SCREW	M 4x18-12	2

I.D. No.	Description	Size	Qty
0KFF	CR. RE. PAN HD. SCREW	M 5x0.8-8	1
0KHX	CAP HD. SQ.NECK BOLT	M 5X0.8-10	1
0KRL	U-TYPE NUT	M 5-12	2
0KRP	SERRATED TOOTHED HEXAGON FLANGE NUT	M 5x0.8，T=5	1
0KRY	HEXAGON NUT AND FLAT WASHER	M 5x0.8	3
0KTH	STRAIN RELIEF		1
0L8X	POWER CABLE		1
0LMH	LOCKING CABLE TIE		2
0LNN	CORD CLAMP		2
0Q98	MOTOR		1
0SHE	WORM GEAR ASS'Y		1
0XGY	CAPACITOR SET PLATE		1
0XGZ	CAPACITOR ASS'Y		1
0XH0	LEAD WIRE ASS'Y		1
20ZT	AXLE SEAT ASS'Y.		1
20ZU	TORSION SPRING		1
214E	CAUTION LABEL		1
21QT	SIDE COVER	6#	1
22CS	MOTOR BRACKET		1
22CT	LABEL		1
22CU	LABEL		1
22DQ	LEAD WIRE ASS'Y		1
22QE	CR. RE. ROUND WASHER HD. SCREW	M 5x0.8-16	2
22QF	CR. RE. TRUSS HD. TAPPING SCREW	M 5x12-20	1
22QJ	CONTROLLER ASS'Y		1
22YU	SHAFT SLEEVE		1
23BC	SANDER	BP Color	1
23BY	LENS ASS'Y		1
23Q3	TRADE-MARK LABEL		2
23UC	LAMP LABEL		1
23UD	LEARNING LABEL		1
23UQ	CONNECT WIRE LABEL		1
23UW	TORSION ADJUST LABEL		1
24AV	LIGHT REFLECTION PLATE		1
24F8	LABEL		1
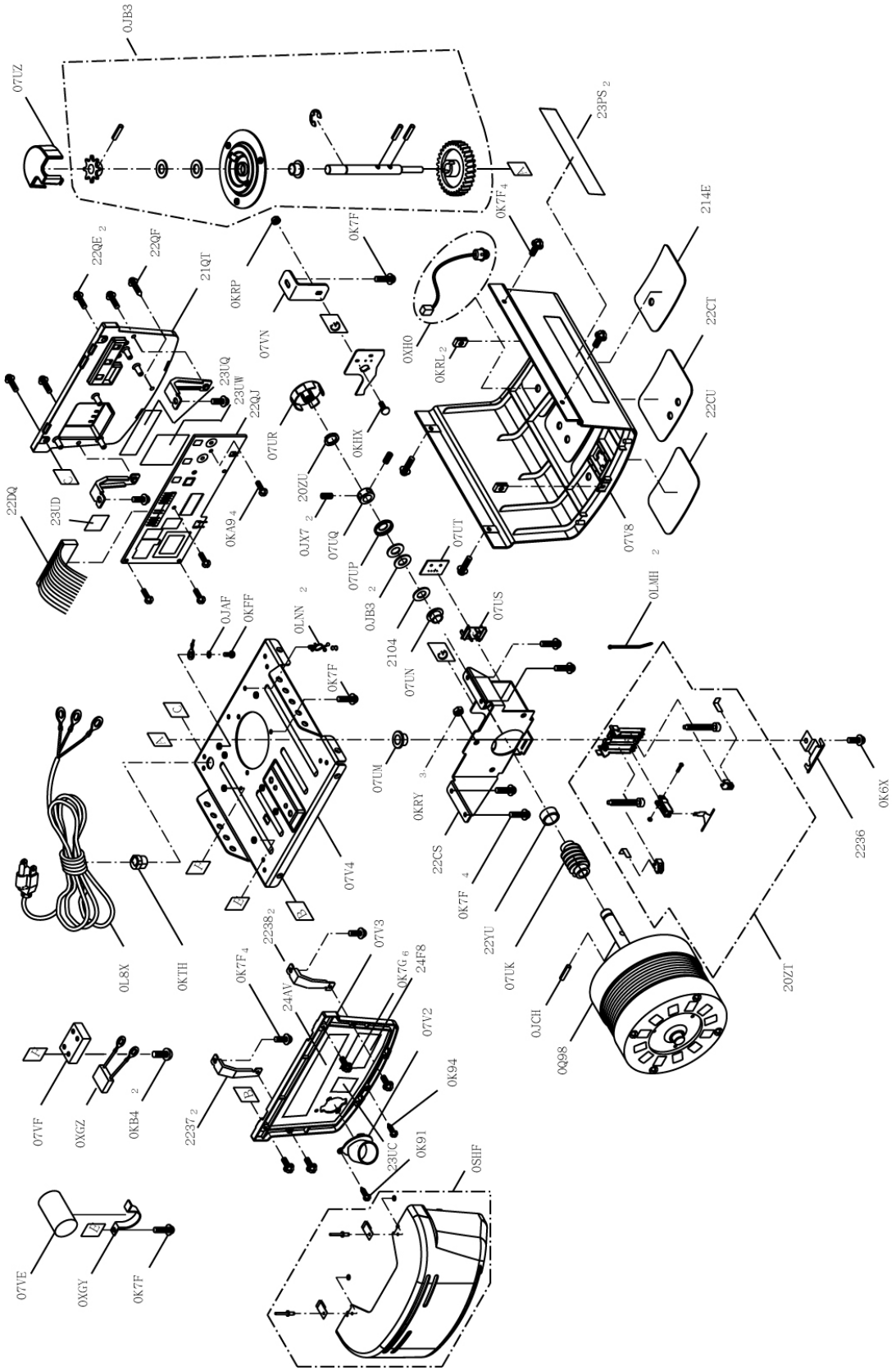
Schematic B – Motor Assembly