Audex®

Cordless freedom anywhere™

Bluetooth® ANYWHERE™

SPB-2800

Portable Wireless Speaker for cellphones

Welcome

Thank you for your purchase of our Bluetooth® ANYWHERE™.

This user's guide will help you to learn the basic features. Please read it carefully before using.

Introduction

The Audex Bluetooth® ANYWHERE™ is a portable hands free wireless speakerphone communication device built on Bluetooth® wireless technology. It is designed and manufactured in accordance with the Bluetooth® Core Specification v1.1. In order to cancel the echo, the latest version of DSP (a technology for echo-canceling) was adopted. With the above two advanced technologies incorporated into its fashionable design, the Audex Bluetooth® ANYWHERE™ can be called an ideal product.

You can connect the ANYWHERE™ to your mobile phone, computer or any Bluetooth® enabled devices that support the headset profile or the hands free profile as an audio gateway. This frees your hands for other valuable tasks.

What is Bluetooth®?

Bluetooth® wireless technology is a worldwide specification for a small-form factor, low-cost and short-range (about 10 meters) radio solution that provides links between mobile computers, mobile phones, other portable handheld devices and connectivity to the Internet. The specification is developed, published and promoted by the Bluetooth® Special Interest Group (SIG).

The SIG, a trade association comprised of leaders in the telecommunications, computing, and networking industries, is driving development of the technology and bringing it to market. The Bluetooth SIG promoters include Ericsson, IBM, Intel, Microsoft, Motorola, Nokia and Toshiba, and hundreds of Associate and Adopter member companies.

Introduction

Bluetooth® operates at a uniform frequency channel. By using the Bluetooth®technology, the wireless data transmission speed will reach 720 bps ~ 1 Mbps. The Bluetooth® technology includes a complete set of encryption and authentication codes, so it has very strong security.

Bluetooth® core specification v1.1

This version includes the specifications concerning RF, BB, LM, L2CAP, RFCOMM, IrDA and other core specifications.

Brief principle of DSP

In order to cancel the echo, the latest version of DSP (a technology for echo-canceling) was adopted for the Bluetooth® ANYWHERE™. Furthermore, **TWO MICROPHONES** are used to recognize and eliminate the surrounding noises. Only the sound close to the transmitter will be sent to the receiver. In this way background noise can be suppressed, effectively canceling the echo. Even if you speak in a noisy environment, the conversation will not be affected by the noise.

Audio gateway

Audio gateway refers to the device that is the gateway for the audio, both for input and output. Typical audio gateways are mobile phones and personal computers.

Contents

This package contains the following:

1.Main unit
2.Battery (already installed in the main unit)
3.Headset
4.AC power adaptor
5.DC power adaptor
6.User's guide

The accessories may be subject to change
for the sake of product improvement.
Changes may be made without prior notice.

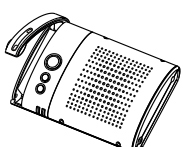

1

3

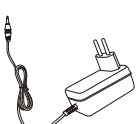

4

5

6

Functional Parts

(1) Speaker
(2) Talk button
(3) Volume Up
(4) Volume Down
(5) Microphone 1
(6) Microphone 2
(7) Connection Indicator
(8) Pairing/Charging Indicator
(9) DC Jack
(10) Headset Jack
(11) Back Clip (for use in the car to attach to the sun visor)
(12) Battery Door
(13) Headset (included)
(14) AC Power Adapter (included)
(15) DC Power Adapter for use in the car (included)

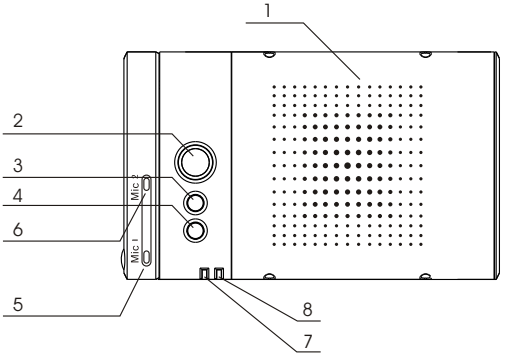

Functional Parts

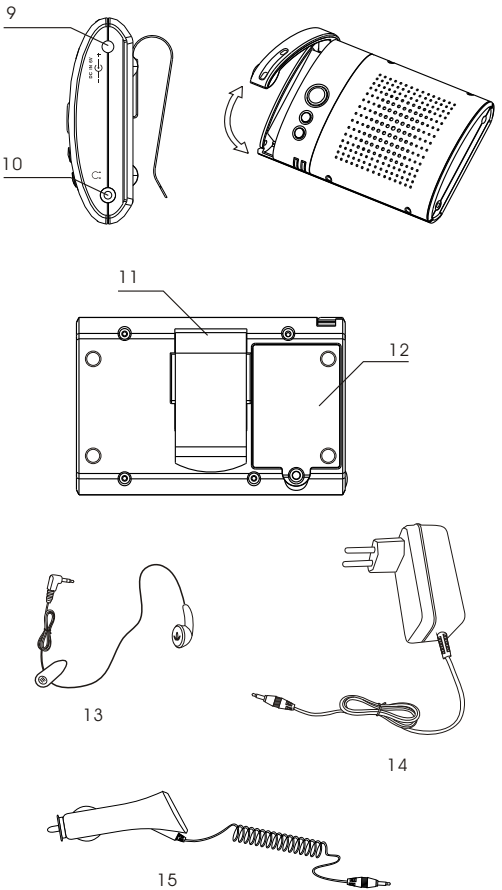

Battery/Charging

Charging the ANYWHERE™ correctly:

1. This device must be charged for about 8 hours with the supplied charger (AC Power Adaptor) before the first use.
2. It's better to turn off the power of this device when you're going to charge it.
3. Don't connect the charger to this device for more than 24 hours.

Charging time:

1. The ANYWHERE™ will need to be charged for 3-4 hours when it is OFF. The accurate charging time is subject to the remaining electronic charge of the battery. The more the electronic charge remains, the less charging time will be needed.
2. When the device is charged in its standby mode,a little current will be consumed so that the charging time will be prolonged accordingly, but the influence on the total charging time is not great.
3. When the device is charged in its working mode, the charging time is hard to estimate. It will be subject to the actual situation.

Capacity of the battery: 650 mAh

Working current:

1. Shutdown current: 29 μA
2. Standby current: 0 ~ 4.5 mA (depending on the mobile phone being used)
3. Normal working current: 150 ~240 mA

Battery/Charging

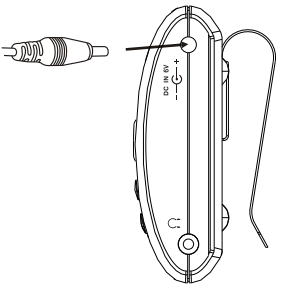

When a cue tone is heard in operation, or the indicator flashes red, it means that the battery is low. You need to recharge it fully.

IMPORTANT:

1. Always use the Audex-specified AC charger.
2. Always remove the AC/DC charger from the power source when you're going to leave your office, home or car. Never leave them connected to the socket or cigarette charger for a long time.

How to ensure the best use of the battery:

In order to prolong the lifetime of the battery(3xAAA standard Ni-MH rechargeable batteries). we suggest you recharge the device fully when the battery is low. Each battery has a lifetime of about 500 charging cycles.

When the device is left unused for a long time after being charged, the battery will be discharged. You have to recharge the device for at least 10 hours until the battery is fully charged. When the charging begins, the red light will go on; the red light will go off after the battery is fully charged.

Battery/Charging

When to buy a new battery:
When the battery can no longer hold a charge for a period of time, it means that the battery's life is going to end. Please go to an Audex-appointed agency to buy the specific battery. Audex won't warrant damaged devices caused by using an unauthorized battery.

How to replace the battery:

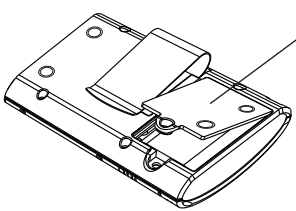

1.Open the battery door with a cross-head screwdriver.

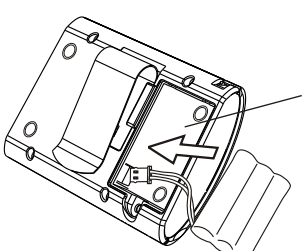

2.Insert new battery.

Battery/Charging

Remove the screws on the battery cover with a cross-head screwdriver and take out the battery carefully. Pull out the battery connector gently. Then plug the connector of the new battery bought from an Audex-appointed agency into the battery socket and put the battery inside the compartment. Put the battery cover back and fasten the screws.

Please don't throw away the used Ni-Mh battery. Send them to an appointed place instead for the sake of environmental protection.

CAUTIONS:

1. Never throw the battery into a fire or expose it to high temperature, which may cause an explosion.
2. Never disassemble the device and use the rechargeable battery of a different type or brand.
3. Always use the specific charger to recharge the device.
4. The voltage used should comply with the voltage range marked on the charger. Using the incorrect charger or incorrect current may cause damage to the device or injury to the user such as burns or getting an electric shock.
5. Charging should be conducted in a well-ventilated space Keep away from inflammable and explosive articles.
6. When using the charger, please plug it into the socket safely.
7. During charging, don't cover the charger and the device with anything.

Battery/Charging

8. When charging is completed, please remove the charger from the socket.
9. Don't pull the wire when removing the charger from the socket. Please hold the housing of the charger instead and remove it carefully.
10. In case of a peculiar smell or smoke, please stop using it immediately and remove the charger carefully.
11. Never use or store the device under high temperature or humidity, which may cause damage.
12. Make sure that the device does not touch any liquid.

Operating Instructions

Pairing:

Before using the ANYWHERE™, you must pair it with your Bluetooth® mobile phone (or other Audio Gateway). Pairing is the process of linking 2 Bluetooth® devices so that they can communicate.

Pairing only needs to be done once. Afterwards, every time you switch on your ANYWHERE™, it will automatically connect to your mobile phone. If you paired your Bluetooth® mobile phone with another Bluetooth® device, you will have to pair the ANYWHERE™ with your phone again before using.

The profile (Headset or Handsfree) is automatically selected by your mobile phone during the pairing stage.

IMPORTANT: Before pairing, all Bluetooth® devices must be switched off.

To initiate pairing, put both the ANYWHERE™ and the mobile phone within 0.3 meter (1 foot) from each other. Make sure there is no Wi-Fi equipment in the vicinity.

1. Switch on your phone and select the Bluetooth® discover mode on the mobile phone. (See the Bluetooth® mobile phone user's guide.)
2. Press and hold (do not release) the Talk button (2) for more than 6 seconds until the Connection Indicator (7) and the Pairing /Charging Indicator (8) will flash blue and red alternately. Then release the Talk button (2).

3. The mobile phone will now search for the Bluetooth® accessory. (Please refer to your mobile phone User's guide.) Once the ANYWHERE™ is detected, a message is displayed with the following information: "Audex-2800".
4. Follow the phone instructions to accept the pairing. The PIN code is 1234.
5. When the pairing is completed, the Connection Indicator (7) will flash blue slowly.

Installation:

After pairing, please fix the ANYWHERE™ in a selected location.

When you use it in the car, please clip it to the sun visor and pull out the microphone handle. For the best speech quality, place the handle at an angle of about 45 degrees to the main unit.

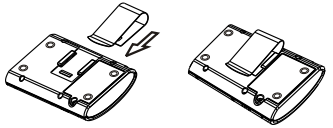

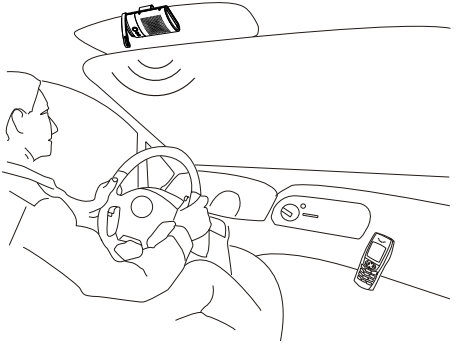

Operating Instructions

When you use it in the office or at home, please put it on a flat surface and put some soft material under it, with the Speaker (1) facing you. Then pull put the microphone handle. For the best speech quality, please set the Microphone 1 (5) facing you. (See the figure below.)

Switching ANYWHERE™ ON and OFF:

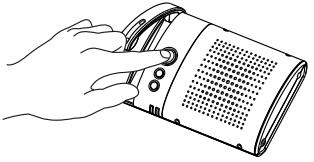

Operating Instructions

Switching ANYWHERE™ ON:
Press and hold the Talk button (2) for about 4 seconds until the Connection Indicator (7) flashes blue. A beep (2 tones) will be heard from the speaker. Release the Talk button (2). The ANYWHERE™ is now in standby mode.

If the ANYWHERE™ is already paired with your mobile phone, press the Talk button (2) again, the ANYWHERE™ will try to connect automatically to the paired mobile phone.

Switching ANYWHERE™ OFF:
Press and hold the Talk button (2) for about 4 seconds until the indicator flashes red. A beep (2 tones) will be heard from the speaker. Release the Talk button (2). The ANYWHERE™ is now switched off.

Standby mode:

In order to save electricity, the blue indicator will flash at long intervals when in its standby mode. To check if the ANYWHERE™ is on, the only thing you need to do is to press the Talk button (2). If the blue indicator flashes right away, it means the ANYWHERE™ is on.

Making a call:

1. Make sure both the ANYWHERE™ and the mobile phone are ON and in standby mode.
2. Dial the phone number you wish to call with your mobile phone. For some mobile phones such as Nokia 6230, the dialing tone can be heard from the ANYWHERE™ during dialing. For other phones, the dialing tone cannot be heard.
3. After the call is put through, you can start the conversation with the ANYWHERE™.

Operating Instructions

If your mobile phone offers a voice dialing function, you can make a call directly from the ANYWHERE™ without any operation on your mobile phone. The following steps should be followed:

1. Make sure the voice dialing function on your mobile phone is activated and your voice tags have been recorded with the phone.
2. Press the Talk Button (2) briefly (when there is no incoming and active call). The audio connection will be established.
3. Wait for the audio signal sent by the mobile phone.
4. Speak out the name of the person you wish to call, as stored in the phone voice tags. The mobile phone will dial the stored number.
5. Please also refer to the instructions of your mobile phone for a better understanding of this function.

Answering a call:

When the ANYWHERE™ rings, press the Talk button (2) briefly. (Make sure both the ANYWHERE™ and the mobile phone are ON and in standby mode.)

Rejecting a call:

Press and hold the Talk button (2) for about 3 seconds when the ANYWHERE™ is ringing (some brands of mobile phones don's support this function).

Ending a call:

During conversation, press the Talk button (2) briefly to end an active call.

Redial the last number:

Press and hold Volume Up (3) or Volume Down (4) for about 3 seconds if there is no active call. The mobile phone will redial the last number dialed.

Adjusting the volume:

The volume of the speaker can be adjusted either from the ANYWHERE™ or from the mobile phone. During an active call, press Volume Up (3) or Volume Down (4) to increase or decrease the volume.

Muting the microphone:

To mute the microphone during an active call:

Press and hold Volume Up (3) or Volume Down (4) for about 3 seconds until a beep is heard from the speaker. The mute function is now activated. A periodic tone is heard from the speaker while the ANYWHERE™ is muted.

To cancel the mute function:

When the microphone is muted, press and hold Volume Up (3) or Volume Down (4) for about 3 seconds until a beep is heard from the speaker. The mute function is now canceled and the periodic tone will cease.

Using the headset:

Please use the Headset (13) when you're going to make a private conversation. Plug it into the Headset Jack (10). The voice will be heard from the Headset (13). But when you talk, you still have to use the Microphone 1 (5) and Microphone 2 (6) on the ANYWHERE™.

FAQ (Troubleshooting)

1. Q: What should I do if the ANYWHERE™ cannot be switched on?
   A: Probably the battery is drained or exhausted. Please fully charge it before using.

2. Q: What should I do if the sound quality becomes worse during operation ?
   A1: If the red indicator is flashing, it means the battery is low. Please recharge the battery.
   A2: If the red indicator is not on, maybe the mobile phone and the ANYWHERE™ were placed too far away from each other. Please move them closer.
3. Q: What should I do if the person on the other end says they hear an echo?
   A: Check if the microphone handle has been pulled out. The best angle between the microphone handle and the main unit is about 45 degrees.

4. Q: What should I do if the person on the other end says that the voice he/she hears is not loud enough?
   A: Check if you're directly facing the microphone of the ANYWHERE™. If your mouth is too far from the microphone or the deviation angle is too large, the voice being heard will be very low. Please try to face the microphone directly.

5. Q: What should I do if the ANYWHERE™ cannot be paired with my mobile phone successfully?
   A: The pairing keys haven't been pressed and held for enough time. Please refer to the instructions in the “Pairing” part of this User's Guide.

FAQ (Troubleshooting)

6. Q: The volume cannot be adjusted from my mobile phone. What's the problem?
   A: Some older mobile phones don't support this function. However, it has nothing to do with the ANYWHERE™.

7. Q: The cue tone cannot be heard from the ANYWHERE™ when the mobile phone is ringing. What's the problem?
   A: Please check if the ANYWHERE™ has been switched on and paired with your mobile phone.

Guide for Safe & Effective Use

Please read the following information before using the ANYWHERE™ .

Safety instructions:

* NEVER connect the device directly to the AC or DC charger (or adapter) when the battery (already installed in the device) is taken out, as this action may cause unrepairable damage to the device.
* Never put this device beside your ear. The loudness of the speaker may damage your hearing.
* Make sure the volume is suitable before using the headset. If the volume is too high, it may damage your hearing.
* Always put the device in a clean place.Don't store it in a dusty area.
* Don't expose it to chemicals such as benzene or thinners, or any other liquids.
* Don't expose it to extreme temperatures (above 35°C or below -5°C). Don't expose it to moisture.
* Don't apply excessive pressure to the device.
* Don't let any foreign matter spill into the device.
* Don't place any heavy objects on top of the device.
* Don't expose it to direct sunlight or heat sources.
* Keep it away from any liquid. Don't expose it to moisture or humidity.
* Keep it away from fire.

* Don't throw or try to flex this device.
* Don't paint the device.

Guide for Safe & Effective Use

* Don't use the device near medical equipment without permission.
* Don't use the device in places where radio equipment or wireless devices are prohibited, e.g. in an airplane.
* Don't use the device in such a place where the danger of explosion exists.
* Don't install or put the device above the air bag in a car.
* Don't try to disassemble this device at any time. Only Audex-authorized personnel can repair it.

Antenna:

Always use the ANYWHERE™ specified antenna. Using an unauthorized or reconstructed antenna may damage the device.

Key point for effective use:

Don't cover the area on the top of the Talk button (see the figure below), since this will affect the speech quality and shorten the speaking time and the standby time due to the excessive energy consumption.

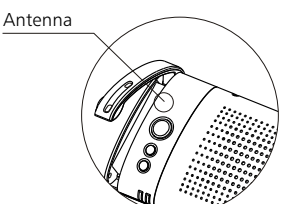

Guide for Safe & Effective Use

Personal medical equipment:

The Bluetooth® product may affect the normal operation of a heart pacemaker or other embedded equipment. Please don't put the ANYWHERE™ on top of these devices. Always put it on the side far away from the pacemaker. The interference is limited when the distance between the ANYWHERE™ and the pacemaker is not less than 15 cm (6 inches). If you feel that interference exists, switch off the ANYWHERE™ immediately. Please contact a cardiologist for details. For the influence on other medical equipment, please consult the related manufacturers.

Children:

In order to avoid injury to themselves or others, and to avoid damaging the device, do not allow children to play with this equipment or its accessories. The device or its accessories may include detachable small parts which could cause suffocation.

Disposal:

Don't dispose of this device as municipal waste. Please consult the local regulations regarding worn-out electronic products.

Power source:

The AC power adaptor can only be connected to a specified power source. Make sure the lead is fixed in the right place to avoid damage or pressure. Before cleaning, please remember to switch off the power of all parts to avoid electric shock. Don't use the AC power adaptor outside or in a damp place.
Never change the lead or plug. If the plug doesn't match the socket, please ask a qualified electrician to install a suitable socket.

Limited Warranty

Audex provides a limited warranty for the ANYWHERE™ and its original accessories (hereafter called “the Product”).

If the Product needs warranty service, please send this letter of warranty back to the distributor. You can consult your local distributor or visit www.audex.cn for details.

Warranty Liability:

During the warranty period, if this Product doesn’t work properly under normal use and maintenance conditions and if this is caused by a design, material or workmanship defect, an Audex-authorized distributor in the country or area where the Product was bought will decide to repair or replace the product, at their discretion, according to the clauses prescribed in this book.

According to the following Conditions, if the returned Product is found not within the range of warranty, Audex and its distributors retain the right to charge a handling fee.

Conditions:

1. The warranty is effective only when the original proof of purchase is provided to the Audex authorized distributor. This must show the purchase date and product serial number.
   If the above document has been smeared or modified after the Product is bought, Audex retains the right to refuse to provide the warranty service.

Limited Warranty

2. If Audex repairs or replaces the Product, the repaired or replaced Product continues to enjoy the warranty service for the balance of the original warranty period or within thirty (30) days after the service date (whichever is longer). Repair or replacement can include the use of the original parts for repairing the same function. The parts or components being replaced belong to Audex.

3. According to the Operating Instructions and Guide for Safe & Effective Use in this book, this warranty doesn't apply to product failure caused by normal wear or misuse (including but not limited to abnormal and irregular use). Also, function failure caused by accident, software or hardware modification or regulation, force majeure, or immersion is not within the range of warranty.

4. The Bluetooth® system incorporated in this Product was provided by other companies. Audex will bear no responsibility for the operation, usability, coverage, service or range of this system.

5. The malfunction of the Product is not within the range of warranty if the Product has been installed, altered, repaired or opened by non-Audex-authorized personnel.

Limited Warranty

6.A malfunction caused by the use of accessories of brands other than Audex or the use of other peripherals is not within the range of warranty.

7.The warranty will become invalid if the seal of the Product is damaged.

8.**No special warranty is available, written or oral, except the limited warranty printed here. All implicit warranties, including but not limited to the commercial or applicable implicit warranties for special purposes, should be subject to the period/duration stipulated by this warranty. In the greatest degree that the law permits, Audex or its distributor will bear no responsibility for occasional or consecutive losses of any nature, including but not limited to the profit loss of commercial loss.**

Some countries/regions/provinces don't permit the exclusion or limitation of occasional or consecutive damages, or the limitation of the implicit warranty period. Therefore, the above restrictive or exemptive clause may not apply to you.

The warranty provided doesn't affect the consumer's lawful rights according to the current applicable laws. Nor does it affect the rights prescribed in the purchase and sales contract signed between the consumer and the distributor.

* Extra information will be needed for some countries/regions. This will be clearly stated on the relevant purchase evidence when necessary.

Declaration of Conformity

FCC Statement

This device complies with part 15 of the FCC rules. Operation is subject to the following two conditions: (1) This device may not cause harmful interference, and (2) this device must accept any interference received, including interference that may cause undesired operation.

Declaration of Conformity

We, **Audex Telecom Industrial Co., Ltd.**
declare under our sole responsibility that our product
Audex Bluetooth® ANYWHERE™ (SPB-2800)
and in combination with our accessories, to which this declaration relates, is in conformity with the appropriate standards , EN 301489,EN 300328, and EN 60950, following the provisions of Radio Equipment and Telecommunication Terminal Equipment directive 99/5/EC, with requirements covering EMC directive 89/336/EEC, and Low Voltage directive 73/23/EEC.

Zhongshan, September 2004
Place & date of issue

Specifications

Main Unit

Item No.	SPB-2800
Battery voltage	3.6V
Battery capacity	650mAh
Continuous working time	3.5 hours (depending on mobile phone)
Standby time	250 hours (depending on mobile phone)
Dimensions（L×W×H）	107×70×24mm (not including the back clip)
Weight	126.5g
Housing	Aluminum, EPDM (used for sound deadening)
Speaker output	Max. 117dB (peak)
Operating temperature	-5 ～ +35℃（23 ～ 95℉）
Charging time	3 ～ 4 hours

AC Adaptor (for use in the office or at home)

Input voltage	220VAC 50Hz	120VAC 60Hz
Output voltage	6VDC 500mA	6VDC 500mA

DC Adaptor (for use in the car)

Input voltage	12VDC
Output voltage	6VDC 500mA

* Specifications and features are subject to be changed without prior notice

Audex® http://www.audex.cn