EXCOUNT-II

Users manual

Legal disclaimer

Any responsibility or liability for loss or damage in connection with the use of this product and the accompanying documentation is disclaimed. The information in this document is furnished for informational use only, is subject to change without notice, may contain errors or inaccuracies, and represents no commitment whatsoever.

Federal Communications Commission Statement

This device complies with part 15 of the FCC Rules. Operation is subject to the following two conditions:
(1) this device may not cause harmful interference, and
(2) this device must accept any interference received, including interference that may cause undesired operation.

WARNING!
Any changes or modifications to this product not expressly approved by the manufacturer could void any assurances of safety or performance and could result in violation of Part 15 of the FCC Rules.

Trademark acknowledgements

Windows 95, 98, ME, NT4 and 2000 are registred trademarks of Microsoft Corporation.

Safety instructions

Do not connect the Transceiver to other voltage sources than a standard 9 volt battery type 6LR61/PP3

Ensure that the battery is connected correctly.

The Transceiver contains a radio transmitter and receiver which must not be used where the use of radio transmitters or other electronic devices is prohibited.

WARNING!
All work related to the EXCOUNT-II´s sensors and the surge arresters shall be made with disconnected and earthed conductors. Follow all regulations and rules stated by international or national safety regulations.

Normally, the EXCOUNT-II´s sensors and the surge arresters operate at a high voltage. Therefore they must be installed in such a way that only qualified personnel has access to them.

EXCOUNT-II is an advanced surge arrester monitor for effectively, reliably and safety monitoring and recording surges on high voltage electrical networks.
EXCOUNT-II incorporates a sensor, which is mounted on the surge arrester, a transceiver, for remote reading and a PC-program (Windows 95/98/2000/ME and NT).
This users manual desribes the functions of EXCOUNT-II to give you total control over surge monitoring.

Table of contents

1. Using the transceiver
Description of the buttons 4
Normal maintenance 4

2. Getting started
First time usage 5
Installation/uninstallation of software 5
Administration of sensors 6

3. Flowchart, make measurements 7

4. Transceiver symbols 8

5. Transceiver menu system 9

6. Transceiver error codes 14

8. Sensor installation 16

9. More information 19

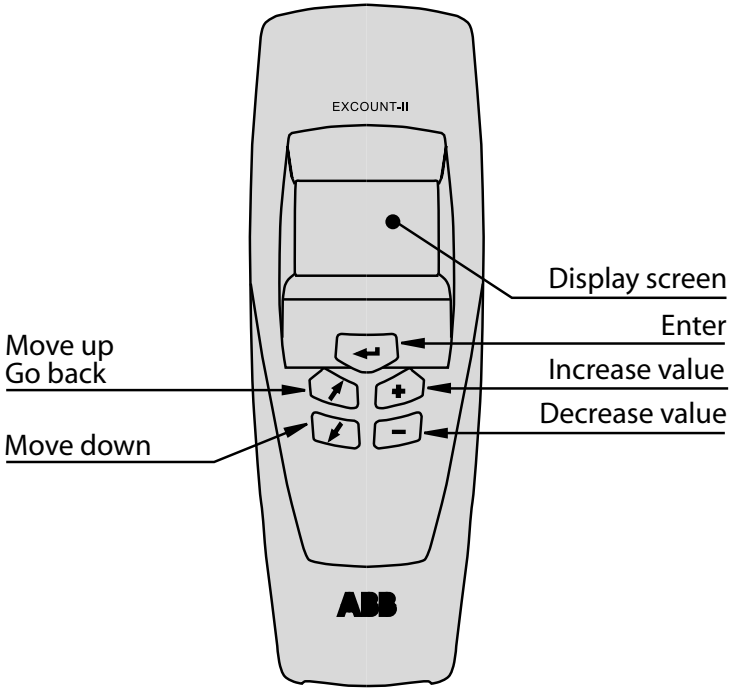

NOTE! To turn on the transceiver press

To turn off the transceiver press

Normal maintenance

To achieve the best possible lifetime out of your EXCOUNT-II Transceiver, avoid exposure to strong sunlight for extended periods, hot temperatures (over +50 ° C), cold temperatures (under -10 ° C) and water (the design is showerproof but not watertight).
To clean the transceiver use only a damp soft cloth with a mild detergent.

First time usage

Open the package and verify that the following items are present together with this manual:
Transceiver
Data cable (RS232)
CD with software

- Familiarize yourself with the above safety instructions.
- Fit a new 9 volt battery type 6LR61/PP3.
- Press the + button on the front panel and verify that the transceiver powers up and that the stand-by menu appears.
  Press the - button and verify that the transceiver powers down.
- Using this manual together with the transceiver and familiarize yourself with the different menus and how they are used.
- Particulary ensure that the date and clock on the Transceiver are set correctly.
- Load the EXCOUNT-II software onto your PC and famliarize yourself with its use by reading the individual HELP files within each respective section.

Installation/unistallation of software

Installation of software
Insert the CD into your computer.
Press the START button in lower left corner
Select SETTINGS then CONTROL PANEL
Double-click on the icon ADD/REMOVE PROGRAMS
Select ADD NEW PROGRAMS
Follow the instructions on the screen

Uninstalling of software
Press the START button in lower left corner
Select SETTINGS then CONTROL PANEL
Double-click on the icon ADD/REMOVE PROGRAMS
Browse to the EXCOUNT-II software and click REMOVE

Administration of Sensors

- Fit the sensor to the arrester as described in the installation instructions supplied with it.

- Record the following details as specified in the EXCOUNT-II HELP system for administration:
  station data
  arrester data
  EXCOUNT-II data

- Input this data into the software as described in the HELP system.

- IMPORTANT! After installation of a new sensor and input of the administration details, an initial reading must always be made to establish a link between the administration details in the PC software and the sensor on site.

- Connect the transceiver to the PC via the data cable

- Download the sensor's ID from the EXCOUNT-II software into the Transceiver.

- IMPORTANT! Check that the date and time on the Transceiver are correct, otherwise set them as described in this manual. Note! If this is not done the date stamp from the sensor will be incorrect.

- Before going to site, check the Transceiver's battery status. If necessary, install a new battery.

- Once at site, individually check that it is possible to make contact with each sensor. This is most easily done by taking a leakage current measurement as described in this manual. If the sensor is not connected properly, an error code will be displayed on the Transceiver.

- If desired, a full set of measurements can be made for reference and then transferred to the PC software as described in the HELP system for Transfer data.

Press to turn on the transceiver

The main menu is accessed by pressing enter

1. Prepare the transceiver for measurements See 1.1.1	2. Make measurements See 1.3	3. Transmit data to the EXCOUNT-II software See 1.1.2
Set the transceiver to "Prepare the transceiver for measurements" mode.	Ensure the sensor to be read is within the range for transmission (normally up to 60 m).	Set the transceiver to "Data transfer from Transceiver to PC" mode.
Connect the transceiver to the PC via the data cable.	Set the transceiver to "Make measurements" mode. Select type of measurement by following the instructions in 1.3.	Connect the transceiver to the PC via the data cable
Open the EXCOUNT-II PC-software and select "Transfer data" followed by "Prepare transceiver for measurement".		Open the EXCOUNT-II PC software and select "Transfer data" followed by "Receive measured data from transceiver".
Select which Sensors are to be read by station, position and phase.	Select Sensor ID from the menu in the transceiver and press enter.	Click "Request data" when ready.
Click "Send list to transceiver" when ready. This erases all stored data in the transceiver.	Different types of measurements can be performed by following the instructions in 1.3.	Click "save" to store the details in the database.
Before going to the site check the battery status. See 1.2. Then turn off the transceiver to save the batteries.		

Transceiver symbols

ABB	Stand by
>>>>>>>	Establishing contact
	Active field
	Transfer data
	Read data
	Battery check
A	Leakage current measurement
A	Resistive leakage current measurement *)
	Read surge counter data
Σ	Total reading *)
V 123 kV	Operating voltage *)
✓	Operation performed successfully
✕	Operation performed un-successfully
xxx-yyyy-zzz	Sensor ID
2002-01-31 12.22.45	Date and clock
	Data transfer from PC to transceiver
	Data transfer from transceiver to PC
0 % 100%	Battery condition

*) Not available in all versions

Stand-by

Turn the transceiver on by pressing

Turn the transceiver off by pressing

Got to the main menu by pressing

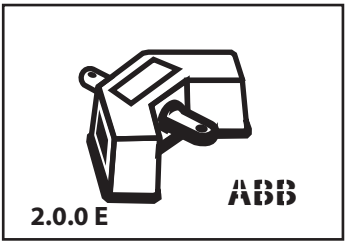

The transceiver turns itself off automatically after 5 minutes.
The program version is shown in the lower left corner. The E stands for extended version which includes resistive leakage current measurement.

1. Main menu

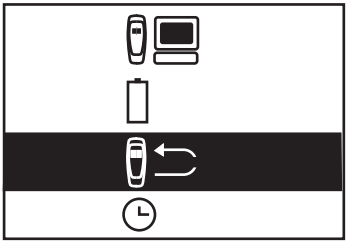

Select alternative with the key.

Then press the

Transfer data *(see 1.1)*

Battery check *(see 1.2)*

Make measurements *(see 1.3)*

Set clock and date *(see 1.4)*

Back to stand-by

1.1 Transfer data

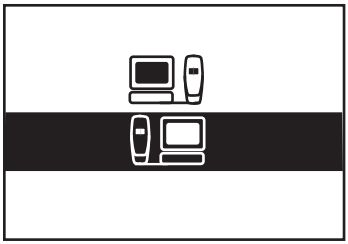

Select alternative with the key.

Then press the

Data transfer from PC to Transceiver *(see 1.1.1)*

Data transfer from Transceiver to PC *(see 1.1.2)*

Back to main menu

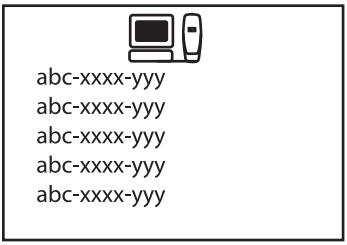

1.1.1 Data transfer from PC to Transceiver

In this mode, Sensor ID's can be transfered from the PC to the transceiver. Connect the data cable to the PC serial port. PC Serial port Com 1 is selected as default by the software.
See also the software help instructions.

Back to transfer data menu

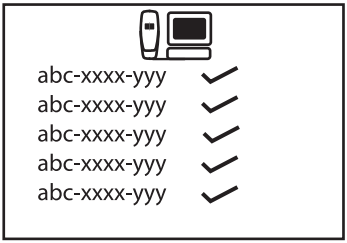

1.1.2 Data transfer from Transceiver to PC

In this mode data collected from the Sensors can be transmitted to the PC. Connect the data cable to the PC serial port. PC Serial port Com 1 is selected as default.
See also the software help instructions.

Back to transfer data menu

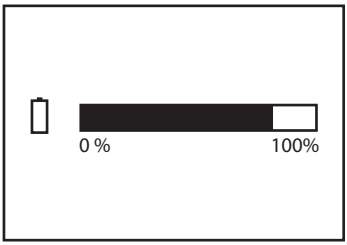

1.2 Battery check

Displays the condition of the battery. Always check the condition of the battery before transfering data to/from the transceiver. Change battery if necessary.
If the battery expires during a measurement session,data can be corrupted or lost.
In such case download the sensor ID's again and take new readings.
NOTE! Whenever the battery is replaced the transceiver clock and date must be reset. *(see 1.4)*

Back to main menu

1.3 Make measurements

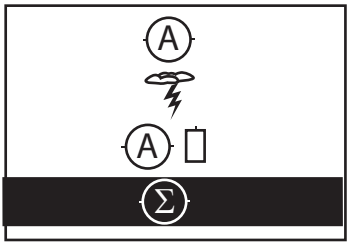

Select alternative with the key.

Then press the

Leakage current measurement *(see 1.3.1)*

Read surge counter data *(see 1.3.2)*

Resistive leakage current measurement *(see 1.3.3)*

Full measurement (all of the above)

Back to main meny

1.3.1 Leakage current measurement

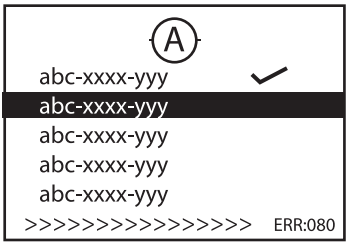

Progress bar Error code

Select sensor ID to read data from with the

Start the reading by pressing

A successful transmission is marked with
A failed transmission is marked with
If the transmission was unsuccessful, an error code will be displayed.

Back to read data menu

1.3.2 Read surge counter data

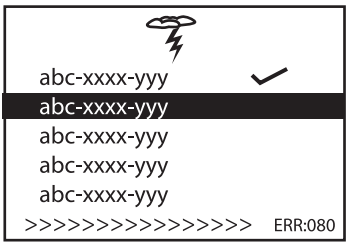

Progress bar Error code

Select sensor ID to read data from with the key.

Start the reading by pressing

A successful transmission is marked with
A failed transmission is marked with
If the transmission was unsuccessful, an error code will be displayed.

Back to read data menu

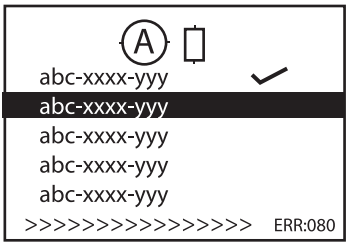

Progress bar Error code

1.3.3 Resistive leakage current measurement *)

Select sensor ID to read data from with the key.

Start the reading by pressing

Before the transmission begins the operating voltage must be given. *(see 1.3.3.1)*

A successful transmission is marked with

A failed transmission is marked with
If the transmission was unsuccessful, an error code will be displayed.

Back to read data menu

*) *Not available in all versions.*

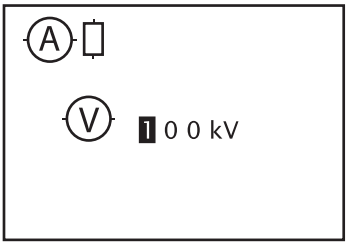

1.3.3.1 Operating voltage *)

The actual operating voltage must be given when measuring the resistive leakage current.
The system voltage is displayed as a default value.

Adjust the value to the actual value with and keys.

Enter the correct value by pressing

NOTE! If the system is 3-phase, the value should be the actual phase-phase voltage. Otherwise, for 1-phase systems, the value should be the phase-ground voltage.

The progress bar will indicate that the transmission has begun.

*) *Not available in all versions.*

1.3.4 Total reading *)

Select sensor ID to read data from with the key.
Start the reading by pressing

Before the transmission begins, the operating voltage must be given. (see 1.3.3.1)

Each reading is made in turn automatically.

A successful transmission is marked with
A failed transmission is marked with
If the transmission was unsuccessful, an error code will be displayed

If any reading is unsuccessfull press key again to repeat the reading.

Back to total reading menu

*) *Not available in all versions.*

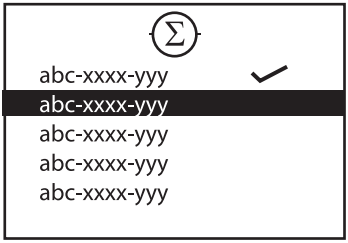

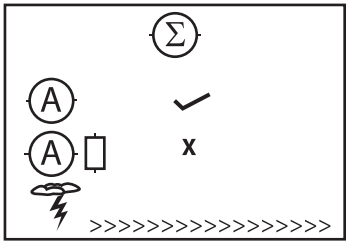

1.4 Set clock and date

The cursor highlights which digit to adjust. The cursor is moved to the next digit by pressing the key.
Each digit is changed by using the and keys.
After changing any digit the status symbol is changed to **X** .
When the correct date and clock is set move the cursor to the **X** and enter the value by pressing
This changes the status symbol to

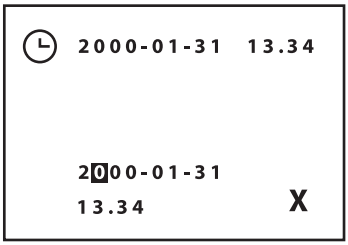

Transceiver error codes

Error code	Description	Suggested cause and action
01	**System error**	Turn off the transceiver and re-start. If the error persists, a serious internal fault has occurred with the Transceiver. Contact your EXCOUNT-II service representative.
11	**Prohibited action**	The user has attempted to do something which is prohibited.
21	**Checksum error**	An error occurred in the data transmission and the data has been lost or corrupted. Interference from a nearby cellular/mobile phone can be a likely cause. Try to re-transmit the data.
31	**EEPROM data read error**	The transceiver could not read from the internal EEPROM memory. Turn off the transceiver and re-start. If the error persists, contact your EXCOUNT-II service representative.
32	**EEPROM data write error**	The transceiver could not write to the internal EEPROM memory. Turn off the transceiver and re-start. If the error persists, contact your EXCOUNT-II service representative.
41	**Low temperature**	The ambient temperature is lower than defined in the database for resistive current measurements. (Lowest defined temperature is -10 ° C). Take new measurements at another time.
42	**High temperature**	The ambient temperature is higher than defined in the database for resistive current measurements. (Highest defined temperature is +60 ° C). Take new measurements at another time.
51	**Too low field probe current**	The system voltage is too low to generate sufficient current in the field probe in the sensor. Check that the line is correctly energised.
52	**Too high field probe current**	The system voltage is too high. Check that the line is correctly energised.

Error code	Description	Suggested cause and action
61	**Low leakage current**	The measured leakage current is too low. Check that the line is correctly energised.
62	**High leakage current**	The measured leakage current is too high. Check that the line is correctly energised. If so, try taking another measurement. If the error persits, the arrester may be suspect.
70	**Unstable leakage current**	A stable value for the leakage current cannot be measured. A likley cause may be an unstable line voltage. Take new measurements at another time.
80	**Sensor not found**	The sensor ID was not recognised by any locally present sensor. Try retransmitting again. If contact still cannot be established, check: a) the chosen sensor ID is present at this station b) the distance to the sensor is not too far (max 60 m, but can depend on interference from buildings and structures) c) interference from a cellular/mobile phone d) battery status to ensure the voltage in the transceiver battery is not too low
81	**Transmission buffer error**	Turn off the transceiver and re-start. If the error persists, a serious internal fault has occurred with the Transceiver. Contact your EXCOUNT-II service representative.
82	**Connection lost**	The sensor recognised it's ID but the connection was lost during the transmission. Try re-transmiting again. If the error persists, check: a) the distance to the sensor is not too far (max 60m, but can depend on interference from buildings and structures). b) interference from a cellular/mobile phone. c) battery status to ensure the voltage in the transceiver battery is not too low.

1

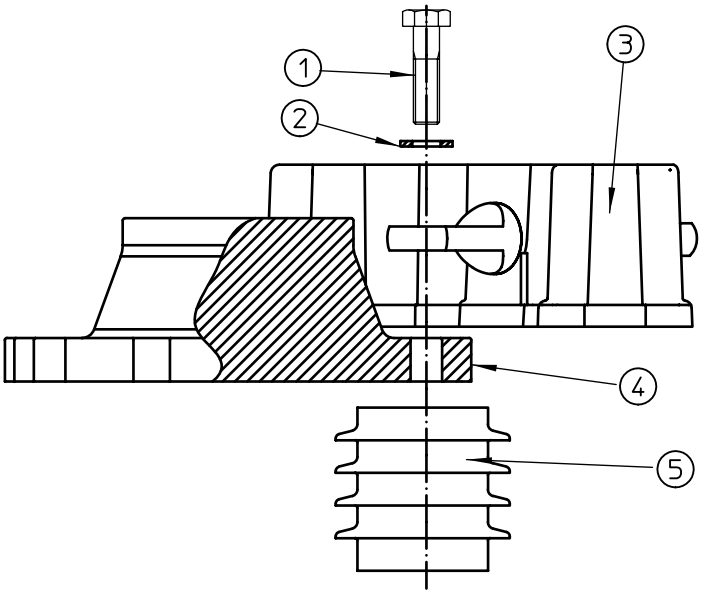

Screws, nuts, sockets, washers and conductors are not supplied by ABB unless specified.

Mount EXCOUNT-II (3) on surge arrester´s bottom flange (4) above insulating base (5) according to figure 1 and 2. Do not place close to venting duct (if any). Bolt joint (1 and 2) is supplied with ABB insulating base (5). Fittiing and tightening torque according to instructions supplied with insulating base.

2

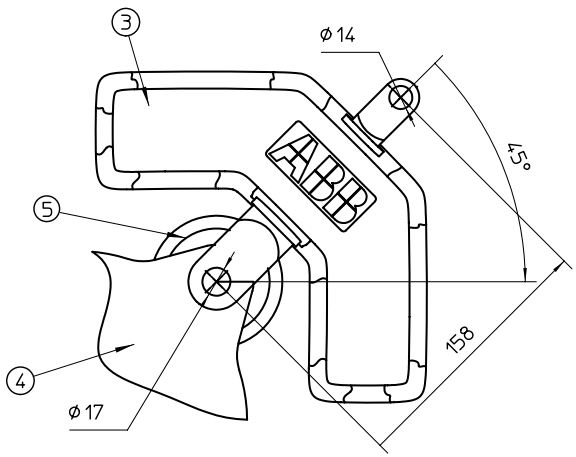

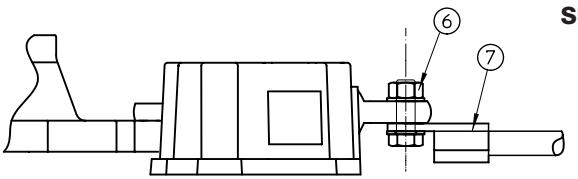

EXCOUNT-II is used as earth connection.
Connect earth cable with tinplated socket (7) according to figure 2.
Recommended screw: M12 (6)
Tightening torque for M12: 84 Nm, use washers

Mounting for special applications

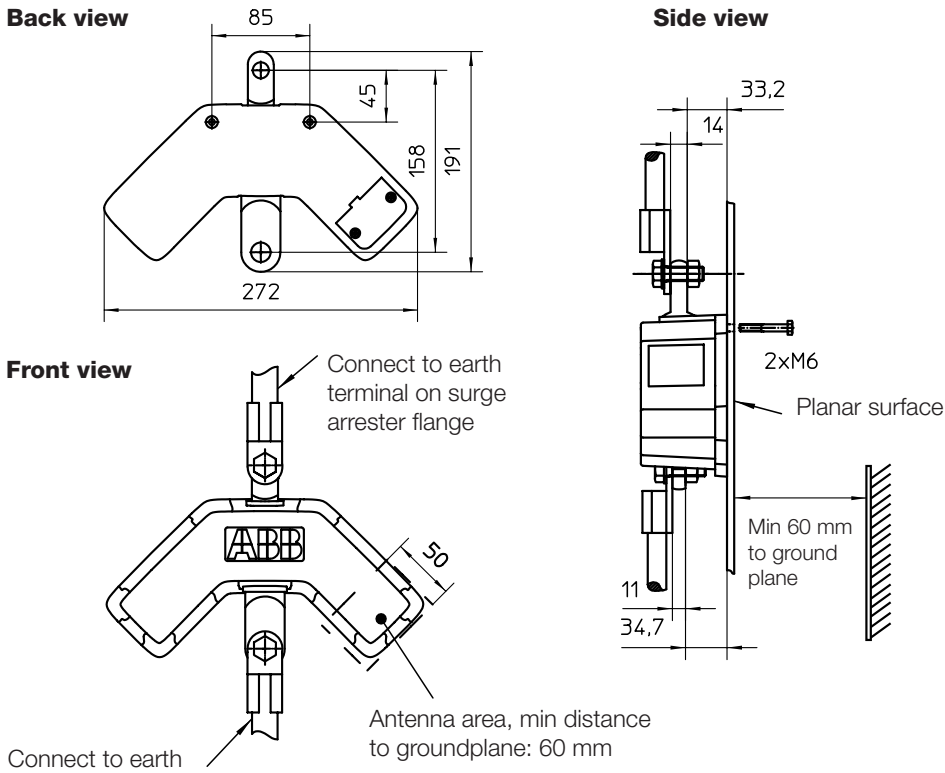

NOTE! Resistive current measurement is not supported with this special application.
Mount EXCOUNT-II against planar surface. Use 2 X M6 bolts.
Connect upper terminal to flange, bottom terminal to earth via conductor.
Recommended screw: M12. Do not mount on earthed plate.

For more information about EXCOUNT-II and for downloading updates of the EXCOUNT-II software, please visit:

http://www.abb.com/arrestersonline

Select HIGH VOLTAGE SURGE ARRESTERS (HV)

Select EXCOUNT-II

PTHVP/A 2501 en, Edition 1 02-02

ABB Power Technology Products AB
High Voltage Products
Surge Arresters
SE-771 80 LUDVIKA, Sweden
Tel. +46 (0)240 78 20 00
Fax. +46 (0)240 179 83
E-mail: arresters.div@se.abb.com
Internet: http://www.abb.com/arrestersonline