1 T²CAS BLOCK DIAGRAMS

1.1 T²CAS Typical Installation

The figure below illustrates a typical aircraft installation of the T²CAS. The system is designed as an integrated safety solution, available as a replacement to the existing TCAS 2000 LRU. The developed LRU is intended for use without modification across the range from general aviation to commercial aircraft.

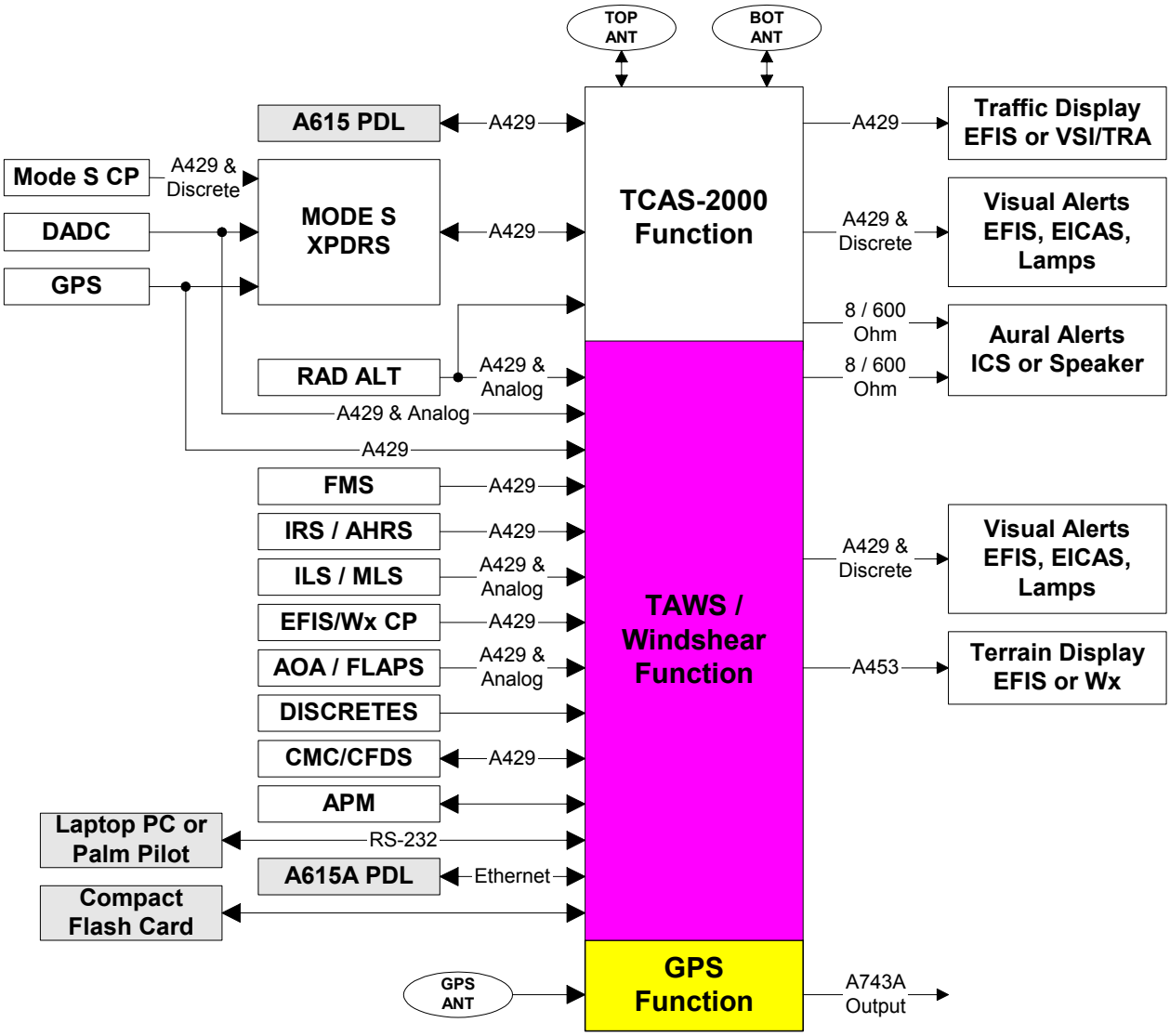

System Aircraft Interface

1.2 T²CAS Functional Overview

The figure below indicates the functional block diagram for T²CAS functions. System inputs and outputs are described in terms of the information driving the functions and do not describe the LRUs themselves.

T²CAS Functional Block Diagram

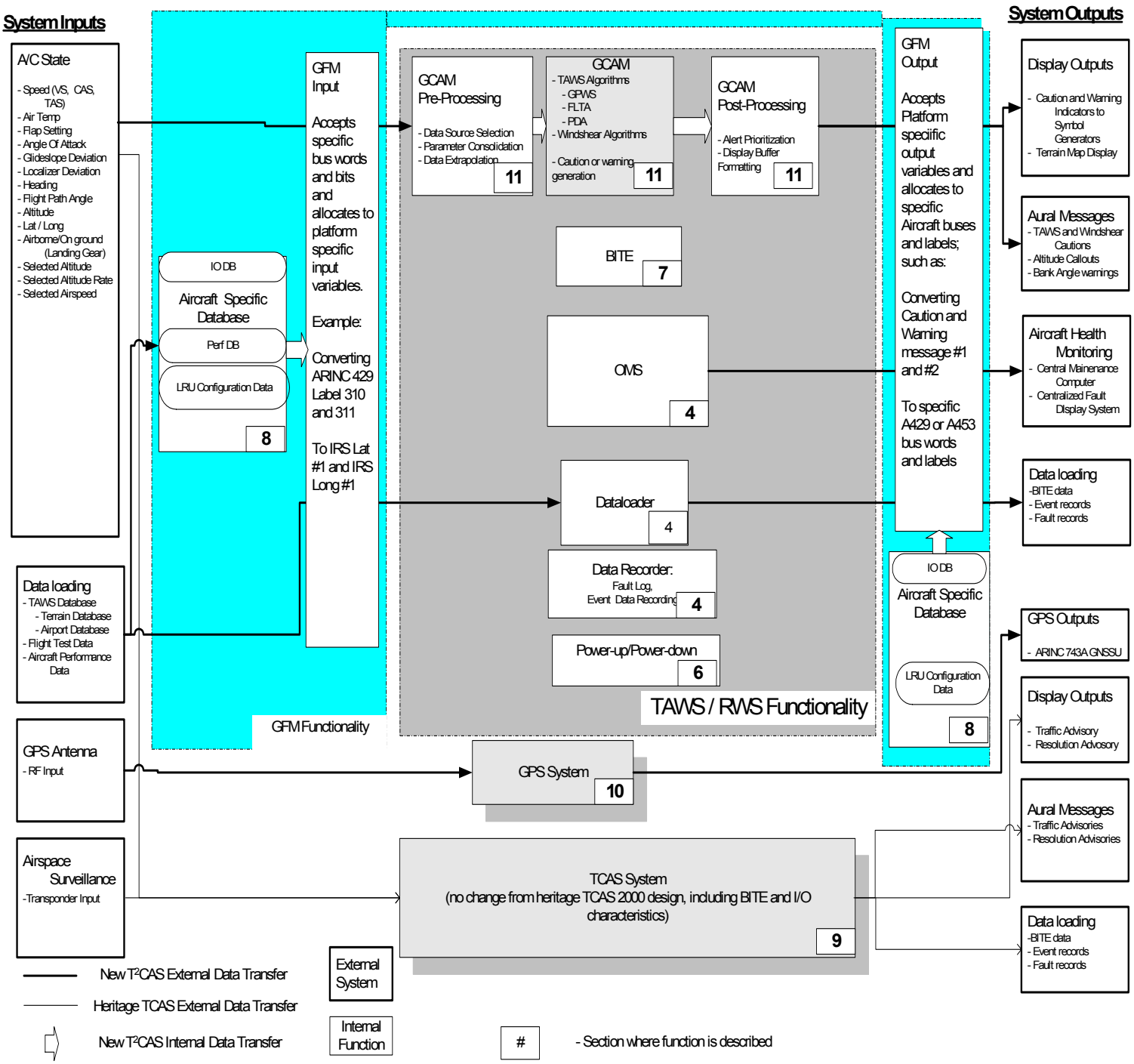

Several key data transfer points are shown in this diagram, but some function-to-function data transfers are omitted.

- Indicates T2CAS system unique functionality.
- Indicates functions interfaced to, but not under ACSS design responsibility for T²CAS.

- Indicates aircraft specific functionality loaded through a separate database.

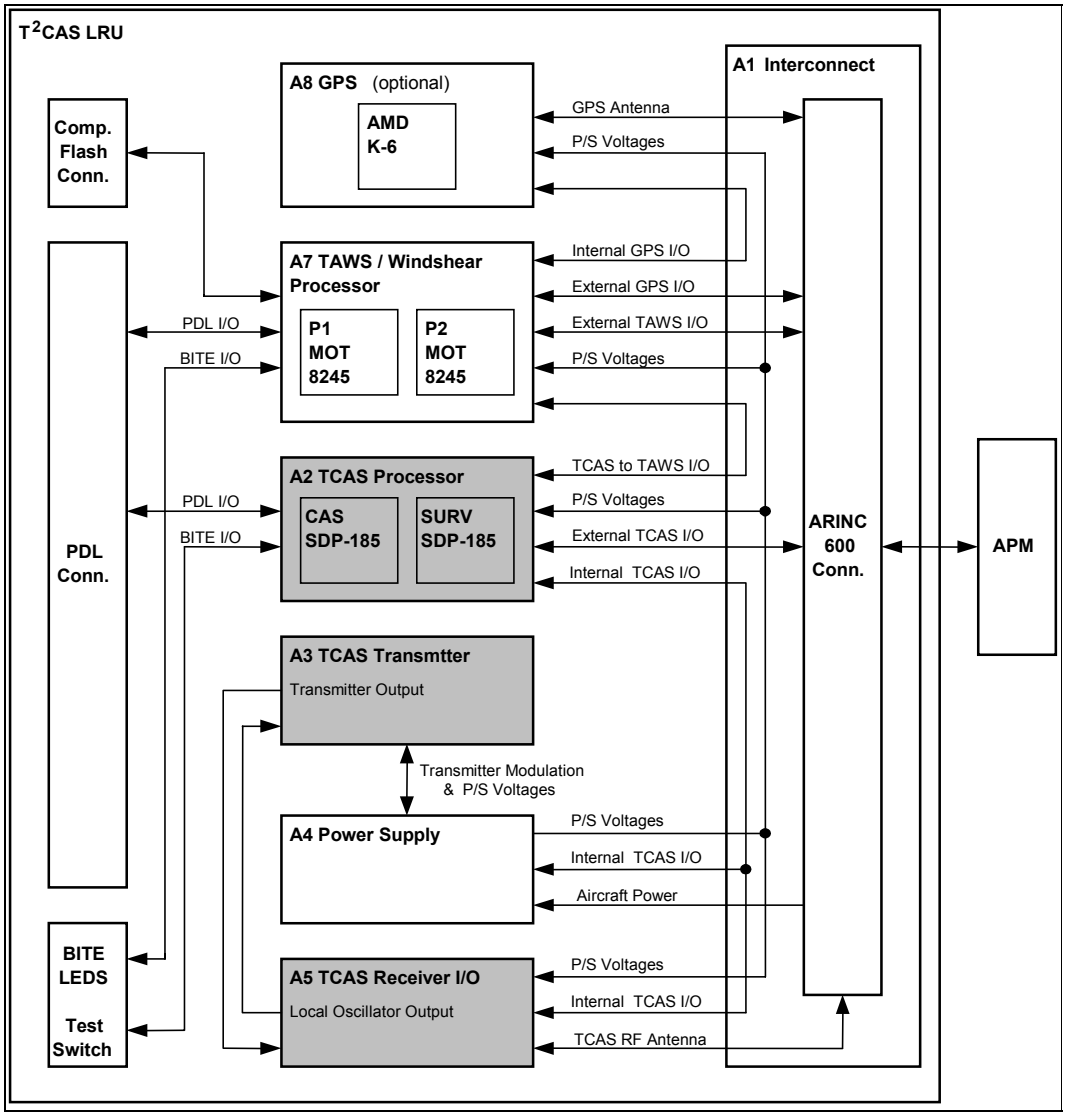

- Indicates heritage TCAS 2000 design which will be unchanged on T^2CAS program

Note: A6 assembly is the cooling fan, present 4-MCU units only.