Aviation Communication and Surveillance Systems
19810 North 7th Avenue
Phoenix, Arizona 85027-4400
U.S.A.

T^{2}CAS
Traffic and Terrain Collision Avoidance System

PRELIMINARY

System Description and Installation Manual

34-43-20

PRINTED IN U.S.A. PUB. NO. 8000451-001 15 FEBRUARY 2003

PROPRIETARY NOTICE

This document and the information disclosed herein are proprietary data of ACSS. Neither this document nor the information contained herein shall be used, reproduced, or disclosed to others without the written authorization of ACSS, except to the extent required for installation or maintenance of the recipient's equipment.

NOTICE – FREEDOM OF INFORMATION ACT (5 USC 552) AND DISCLOSURE OF CONFIDENTIAL INFORMATION GENERALLY (18 USC 1905)

This document is being furnished in confidence by ACSS. The information disclosed herein falls within exemption (b) (4) of 5 USC 552 and the prohibitions of 18 USC 1905.

S2003

ACSS is a U.S. registered trademark.
All other marks are owned by their respective companies.

PRELIMINARY

Use or disclosure of information on this page is subject to the restrictions in the proprietary notice of this document.

RECORD OF REVISIONS

For each revision, put the revised pages in your manual and discard the superseded pages. Write the revision number and date, date put in manual, and the incorporator's initials in the applicable columns on the Record of Revisions. The initial A shows ACSS is the incorporator.

Revision Number	Revision Date	Date Put in Manual	By

Use or disclosure of information on this page is subject to the restrictions in the proprietary notice of this document.

Blank Page

Use or disclosure of information on this page is subject to the restrictions in the proprietary notice of this document.

RECORD OF TEMPORARY REVISIONS

Read the location instructions on each temporary revision page to know where to put the pages in your manual. Remove temporary revision pages only when discard instructions are given. For each temporary revision, give the correct data in the applicable columns.

Temporary Revision No.	Temporary Revision Date	Date Put in Manual	By *	Date Removed from Manual	By *

* The initial A in this column shows ACSS has done the task.

Use or disclosure of information on this page is subject to the restrictions in the proprietary notice of this document.

Blank Page

Use or disclosure of information on this page is subject to the restrictions in the proprietary notice of this document.

SERVICE BULLETIN LIST

Service Bulletin	Identified Mod	Date Included in this Manual	Description

Use or disclosure of information on this page is subject to the restrictions in the proprietary notice of this document.

Blank Page

Use or disclosure of information on this page is subject to the restrictions in the proprietary notice of this document.

LIST OF EFFECTIVE PAGES

Original	-	15 Feb 2003

Subheading and Page	Revision
Title	
T-1	
T-2	-
	-
Record of Revisions	
RR-1	-
RR-2	-
Record of Temporary Revisions	
RTR-1	-
RTR-2	-
Service Bulletin List	
SBL-1	-
SBL-2	-
List of Effective Pages	
LEP-1	-
LEP-2	-
LEP-3	-
LEP-4	-
LEP-5	-
LEP-6	-
Table of Contents	
TC-1	-
TC-2	-
TC-3	-
TC-4	-
TC-5	-
TC-6	-
TC-7	-
TC-8	-
TC-9	-
TC-10	-
TC-11	-
TC-12	-
TC-13	-
TC-14	-
Introduction	
INTRO-1	-
INTRO-2	-
INTRO-3	-
INTRO-4	-
INTRO-5	-
INTRO-6	-
System Description	
1-1	-
1-2	-
1-3	-
1-4	-
1-5	-
1-6	-
1-7	-
1-8	-
1-9	-
1-10	-
1-11	-
1-12	-
1-13	-
1-14	-
1-15	-
1-16	-
1-17	-
1-18	-
F 1-19/1-20	-
1-21	-
1-22	-
1-23	-

■ indicates changed, added, or deleted page.
F indicates right foldout page with blank back.

Use or disclosure of information on this page is subject to the restrictions in the proprietary notice of this document.

Subheading and Page	Revision
1-24	-
1-25	-
1-26	-
1-27	-
1-28	-
1-29	-
1-30	-
1-31	-
1-32	-
1-33	-
1-34	-
1-35	-
1-36	-
F 1-37/1-38	-
1-39	-
1-40	-
1-41	-
1-42	-
1-43	-
1-44	-
1-45	-
1-46	-
1-47	-
1-48	-
1-49	-
1-50	-
1-51	-
1-52	-
1-53	-
1-54	-
1-55	-
1-56	-
1-57	-
1-58	-
1-59	-
1-60	-
1-61	-
1-62	-
1-63	-
1-64	-
1-65	-
1-66	-

Subheading and Page	Revision
1-67	-
1-68	-
1-69	-
1-70	-
1-71	-
1-72	-
1-73	-
1-74	-
1-75	-
1-76	-
1-77	-
1-78	-
1-79	-
1-80	-
1-81	-
1-82	-
1-83	-
1-84	-
1-85	-
1-86	-
Mechanical Installation	
2-1	-
2-2	-
2-3	-
2-4	-
2-5	-
2-6	-
2-7	-
2-8	-
2-9	-
2-10	-
F 2-11/2-12	-
F 2-13/2-14	-
F 2-15/2-16	-
F 2-17/2-18	-
F 2-19/2-20	-
F 2-21/2-22	-
F 2-23/2-24	-
F 2-25/2-26	-
F 2-27/2-28	-
F 2-29/2-30	-

Use or disclosure of information on this page is subject to the restrictions in the proprietary notice of this document.

Subheading and Page	Revision
F 2-31/2-32	-
F 2-33/2-34	-
F 2-35/2-36	-
F 2-37/2-38	-
2-39	-
2-40	-
F 2-41/2-42	-
F 2-43/2-44	-
F 2-45/2-46	-
F 2-47/2-48	-
F 2-49/2-50	-
F 2-51/2-52	-
F 2-53/2-54	-
F 2-55/2-56	-
F 2-57/2-58	-
Electrical Installation	
3-1	-
3-2	-
3-3	-
3-4	-
3-5	-
3-6	-
3-7	-
3-8	-
3-9	-
3-10	-
3-11	-
3-12	-
3-13	-
3-14	-
3-15	-
3-16	-
3-17	-
3-18	-
3-19	-
3-20	-
3-21	-
3-22	-
3-23	-
3-24	-
3-25	-

Subheading and Page	Revision
3-26	-
3-27	-
3-28	-
3-29	-
3-30	-
3-31	-
3-32	-
3-33	-
3-34	-
3-35	-
3-36	-
3-37	-
3-38	-
Loading/Gradient Specifications	
4-1	-
4-2	-
4-3	-
4-4	-
4-5	-
4-6	-
4-7	-
4-8	-
4-9	-
4-10	-
4-11	-
4-12	-
4-13	-
4-14	-
4-15	-
4-16	-
4-17	-
4-18	-
4-19	-
4-20	-
4-21	-
4-22	-
4-23	-
4-24	-
4-25	-
4-26	-
4-27	-

Use or disclosure of information on this page is subject to the restrictions in the proprietary notice of this document.

Subheading and Page	Revision	Subheading and Page	Revision
4-28	-	4-70	-
4-29	-	4-71	-
4-30	-	4-72	-
4-31	-	4-73	-
4-32	-	4-74	-
4-33	-	4-75	-
4-34	-	4-76	-
4-35	-	4-77	-
4-36	-	4-78	-
4-37	-	4-79	-
4-38	-	4-80	-
4-39	-	4-81	-
4-40	-	4-82	-
4-41	-	4-83	-
4-42	-	4-84	-
4-43	-	4-85	-
4-44	-	4-86	-
4-45	-	4-87	-
4-46	-	4-88	-
4-47	-	4-89	-
4-48	-	4-90	-
4-49	-	4-91	-
4-50	-	4-92	-
4-51	-	4-93	-
4-52	-	4-94	-
4-53	-		
4-54	-	Adjustment/Test	
4-55	-	5-1	-
4-56	-	5-2	-
4-57	-	5-3	-
4-58	-	5-4	-
4-59	-	5-5	-
4-60	-	5-6	-
4-61	-	5-7	-
4-62	-	5-8	-
4-63	-	5-9	-
4-64	-	5-10	-
4-65	-	5-11	-
4-66	-	5-12	-
4-67	-	5-13	-
4-68	-	5-14	-
4-69	-	5-15	-

Use or disclosure of information on this page is subject to the restrictions in the proprietary notice of this document.

Subheading and Page	Revision
5-16	-
5-17	-
5-18	-
Fault Isolation	
6-1	-
6-2	-
6-3	-
6-4	-
6-5	-
6-6	-
6-7	-
6-8	-
6-9	-
6-10	-
6-11	-
6-12	-
6-13	-
6-14	-
6-15	-
6-16	-
6-17	-
6-18	-
6-19	-
6-20	-
6-21	-
6-22	-
6-23	-
6-24	-
6-25	-
6-26	-
6-27	-
6-28	-
6-29	-
6-30	-
6-31	-
6-32	-
Maintenance Practices	
7-1	-
7-2	-
7-3	-
7-4	-
7-5	-
7-6	-
7-7	-
7-8	-
7-9	-
7-10	-
7-11	-
7-12	-
Inspection/Check	
8-1	-
8-2	-
Cleaning/Painting	
9-1	-
9-2	-
9-3	-
9-4	-
9-5	-
9-6	-
Repairs	
10-1	-
10-2	-
Appendix A	
A-1	-
A-2	-
A-3	-
A-4	-
A-5	-
A-6	-
Appendix B	
B-1	-
B-2	-
F B-3/B-4	-
F B-5/B-6	-

Use or disclosure of information on this page is subject to the restrictions in the proprietary notice of this document.

Blank Page

Use or disclosure of information on this page is subject to the restrictions in the proprietary notice of this document.

TABLE OF CONTENTS

Section **Page**

INTRODUCTION **INTRO-1**

1. General INTRO-1
2. Reference Documents INTRO-1
3. Weights and Measurements INTRO-2
4. Acronyms and Abbreviations INTRO-2
5. Special Precautions INTRO-6

SYSTEM DESCRIPTION **1-1**

1. General 1-1
2. System Components 1-2
3. System Description 1-6
   - A. System Functional Description 1-6
     - (1) TCAS Functional Description 1-6
     - (2) TAWS Functional Description 1-11
     - (3) RWS Functional Description 1-13
     - (4) GPS Functional Description 1-13
   - B. System Configurations 1-13
     - (1) TCAS System Configuration 1-14
     - (2) TAWS/RWS System Configuration 1-14
4. Component Descriptions 1-21
   - A. TT-950/951/952 T2CAS Computer Unit 1-21
     - (1) System Interfaces 1-26
     - (2) Discrete Inputs 1-33
     - (3) Program Inputs 1-33
     - (4) Discrete Outputs 1-33
     - (5) Self-Test Function 1-34
   - B. Airplane Personality Module Interface 1-35
   - C. Directional Antenna 1-35
   - D. GPS Antenna and Coax 1-39
   - E. Gables ATC/TCAS Dual Mode S Transponder Control Panel 1-41
     - (1) Functional Description and Operation 1-42
   - F. TAWS Control Panel 1-44

Use or disclosure of information on this page is subject to the restrictions in the proprietary notice of this document.

Section **Page**

G. VSI/TRA Display 1-44
(1) Functional Description and Operation 1-46
(2) Software Considerations 1-47
(3) Built-In-Test Equipment (BITE) and Self-Test Capability 1-47
H. TAWS Terrain Hazard Display 1-49
(1) Functional Description and Operation 1-49
I. XS-950 Mode S Data Link Transponder 1-51
J. RCZ-852 Diversity Mode S Transponder 1-56
5. System Operation 1-60
A. TCAS Operation 1-60
(1) Operational Modes 1-60
(2) Display Symbology 1-62
(3) Aural Messages 1-64
(4) Operating Procedures 1-67
B. TAWS/RWS Operation 1-68
(1) TAWS Operational Modes 1-68
(2) RWS Operational Mode 1-73
(3) TAWS Display Symbology 1-73
(4) TAWS/RWS Aural Messages 1-78
(5) Operating Procedures 1-81

MECHANICAL INSTALLATION 2-1

1. General 2-1
2. Equipment and Materials 2-1
3. Mechanical Installation Design 2-1
A. TT-950/951/952 T2CAS Computer Unit Provisions 2-1
B. Airplane Personality Module Provisions 2-2
C. Antenna Provisions 2-2
(1) Directional Antenna Installation 2-2
(2) Omnidirectional Antenna Installation 2-3
D. GPS Antenna and Coax Provisions 2-3
E. TCAS Control Panel Provisions 2-5
F. TAWS/RWS Control Panel Provisions 2-5

Use or disclosure of information on this page is subject to the restrictions in the proprietary notice of this document.

Section **Page**

G. VSI/TRA Provisions 2-5
H. TAWS Terrain Hazard Display Provisions 2-5
I. Transponder Provisions 2-8
(1) Mode S Data Link Transponder Provisions 2-8
(2) Diversity Mode S Transponder Provisions 2-8
(3) ATC Transponder Antenna Provisions 2-9

ELECTRICAL INSTALLATION 3-1

1. General 3-1
2. Equipment and Materials 3-1
3. Electrical Installation Procedure 3-1
4. Electrical Installation 3-1
A. TT-950/951/952 T2CAS Computer Units 3-1
B. APM 3-1
C. TCAS Antennas 3-2
D. GPS Antenna and Coax 3-4
E. Control Panels 3-12
F. Thales VSI/TRA Display 3-14
G. TAWS Terrain Hazard Display 3-18
H. Transponders 3-20
(1) XS-950 Data Link Transponder 3-20
(2) RCZ-852 Diversity Mode S Transponder 3-29

LOADING/GRADIENT SPECIFICATIONS 4-1

1. General 4-1
2. TCAS Interface Description 4-1

TAWS/RWS PINOUTS AND PIN DEFINITIONS 4-49

3. TAWS/RWS Specifications 4-49
A. TAWS/RWS Pinout and Pin Descriptions (Non-Configurable) 4-50
B. TAWS/RWS Data Configuration 4-54
(1) ASDB 4-54
(2) APM 4-55

Use or disclosure of information on this page is subject to the restrictions in the proprietary notice of this document.

Section	Page
C. APM/ASDB Configurable Pinout and Pin Description	4-63
(1) Programmable Analog Input Pins	4-63
(2) Programmable Digital Input/Output Pins	4-68
(3) Programmable Discrete Input/Output Pins	4-72
D. TAWS/RWS Input Data Signals	4-75
(1) Vertical Speed (Digital/Analog)	4-75
(2) Ground Speed	4-76
(3) True Track Angle	4-76
(4) Radio Altitude (Digital/Analog)	4-77
(5) Flight Path Angle	4-78
(6) Current Aircraft Weight	4-78
(7) Aircraft Position Latitude/Longitude	4-78
(8) Aircraft Altitude	4-79
(9) Navigation Accuracy	4-79
(10) Static Air Temperature	4-80
(11) Roll Angle	4-80
(12) Computed Airspeed	4-80
(13) Selected Runway Heading	4-80
(14) Glideslope Deviation (Digital/Analog)	4-80
(15) Localizer Deviation (Digital/Analog)	4-81
(16) Selected Decision Height	4-81
(17) Minimum Descent Altitude	4-82
(18) Body Longitudinal Acceleration (Digital/Analog)	4-82
(19) Body Normal Acceleration (Digital/Analog)	4-82
(20) Pitch Angle	4-82
(21) Flap Angle	4-82
(22) Slat Angle	4-83
(23) True Airspeed	4-83
(24) Angle of Attack (AOA) Left/Right	4-83
(25) Magnetic Heading	4-83
(26) True Display Orientation Left	4-84
(27) True Display Orientation Right	4-84
(28) Display Range Left/Right	4-84

Use or disclosure of information on this page is subject to the restrictions in the proprietary notice of this document.

Section **Page**

E. TAWS/RWS Discrete Inputs 4-85
(1) Landing Gear Down 4-85
(2) Landing Flap 4-85
(3) Terrain Inhibit 4-85
(4) Steep Approach 4-85
(5) Glideslope Inhibit 4-85
(6) Glideslope Cancel 4-85
(7) Decision Height /Minimum Descent Altitude Selection (DH/MDA) 4-86
(8) Below Decision Height 4-86
(9) Aircraft On Ground 4-86
(10) ILS Back Course 4-86
(11) Altitude Callout Disable 4-86
(12) Engine Out 4-86
F. TAWS/RWS Digital Output Data 4-86
(1) GCAM Event Data 4-86
(2) GCAM Data 4-88
(3) GCAM General Purpose 4-88
(4) Terrain Awareness Display Output 4-88
(5) OMS Fault Summary Word 4-89
G. TAWS/RWS Discrete Output Data 4-91
(1) Ground Discrete Parameters 4-91
(2) Ground Discrete Monitor Parameters 4-92

ADJUSTMENT/TEST 5-1

1. General 5-1
2. Equipment 5-1
3. Initial Harness Checkout (New Installations Only) 5-1
A. T2CAS Computer Unit Harness Checkout 5-1
B. T2CAS Controller and Display Unit Harness Checkout 5-1
C. LRU Preinstallation Power Checkout 5-2
D. Initial System Installation Operational Test 5-2

Use or disclosure of information on this page is subject to the restrictions in the proprietary notice of this document.

Section **Page**

4. System Self-Tests 5-3
   A. TCAS Flight Deck Display Test Modes 5-3
      (1) Short Test Mode 5-3
      (2) Extended Test Mode 5-4
   B. TAWS/RWS Flight Deck Display Test Modes 5-5
      (1) Standard Test Mode 5-5
      (2) Extended Test Mode 5-7
   C. T2CAS Computer Unit Self-Test 5-9
5. Return to Service Test 5-11
6. Operational Software Loading Using an ARINC Portable Data Loader, RS232 Port or Compact Flash Card 5-11
   A. Current Software Verification 5-12
      (1) TCAS Software Verification 5-12
      (2) TAWS/RWS Software Verification 5-12
   B. Portable Data Loader - TCAS Operational Software Loading (While Installed on Aircraft) 5-12
   C. Compact Flash Card - TAWS/RWS Operational Software/ACD/ASDB Loading (While Installed on Aircraft) 5-13
   D. RS232 - TAWS/RWS APM Configuration Data and APM Application Data Loading 5-15
   E. Updated Software Verification 5-15
      (1) Software Verification Using Flight Deck Systems ONLY 5-15
      (2) TCAS Software Verification Using a Stand-Alone PC ONLY 5-15
      (3) TAWS/RWS Software Verification Using a Stand-Alone PC ONLY 5-17
      (4) TCAS Software Verification Using a Software Verification Fixture ONLY . . 5-18
      (5) TCAS Software Verification Using a Remote Connected VSI/TRA ONLY . 5-18

FAULT ISOLATION 6-1

1. General 6-1
2. Equipment and Materials 6-1
3. Procedure 6-1
   A. CMC or CFDS 6-1
   B. Flight Deck Initiated Self-Test/Fault Display Systems 6-1
      (1) TCAS 6-1
      (2) TAWS/RWS 6-2

Use or disclosure of information on this page is subject to the restrictions in the proprietary notice of this document.

Section **Page**

C. T2CAS Aural and Visual Annunciations 6-4
(1) TCAS Aural and VSI/TRA Annunciations 6-4
(2) TAWS/RWS Aural and Visual Annunciations 6-6
D. T2CAS Test Menu and System Status Pages 6-7
(1) TCAS Test Menu and System Status Pages 6-7
(2) TAWS/RWS Test Menu and System Status Pages 6-20
E. T2CAS Computer Unit Self-Test 6-25
F. Directional Antenna Test / Fault Isolation Procedure 6-29

MAINTENANCE PRACTICES 7-1

1. General 7-1
2. Equipment and Materials 7-1
3. Procedure for the TT-950/951/952 T2CAS Computer Unit 7-2
A. Removal and Installation Procedure 7-2
B. Adjustment Procedure 7-2
C. Repair Procedure 7-2
D. Return to Service Procedures 7-2
4. Procedure for the APM 7-2
A. Removal and Installation Procedure 7-2
B. Adjustment Procedure 7-3
C. Repair Procedure 7-3
D. Return to Service Procedures 7-3
5. Procedure for the Directional Antenna 7-4
A. Removal and Installation Procedure 7-4
B. Adjustment Procedure 7-5
C. Repair Procedure 7-5
D. Return to Service Procedures 7-5
6. Procedure for the Omnidirectional Antenna 7-5
A. Removal and Installation Procedure 7-5
B. Adjustment Procedure 7-6
C. Repair Procedure 7-6
D. Return to Service Procedures 7-6

Use or disclosure of information on this page is subject to the restrictions in the proprietary notice of this document.

Section **Page**

7. Procedure for the GPS Antenna 7–7
   A. Removal and Installation Procedure 7–7
   B. Adjustment Procedure 7–7
   C. Repair Procedure 7–7
   D. Return to Service Procedures 7–7
8. Procedure for the Control Panel 7–7
   A. Removal and Installation Procedure 7–7
   B. Adjustment Procedure 7–7
   C. Repair Procedure 7–7
   D. Return to Service Procedures 7–7
9. Procedure for the VSI/TRA Display 7–8
   A. Removal and Installation Procedure 7–8
   B. Adjustment Procedure 7–8
   C. Repair Procedure 7–8
   D. Return to Service Procedures 7–8
10. Procedure for the Transponder 7–9
   A. Removal and Installation Procedure 7–9
   B. Adjustment Procedure 7–9
   C. Repair Procedure 7–9
   D. Return to Service Procedures 7–10
11. Instructions for Continued Airworthiness, FAR Part 25.1529 7–11

INSPECTION/CHECK 8-1

1. General 8–1
2. Equipment and Materials 8–1
3. Procedure 8–1
   A. Check T2CAS Computer Unit 8–1
   B. Check Antennas 8–1
   C. Check Control Panel 8–1
   D. Check VSI/TRA Display 8–2
   E. Check Transponders 8–2

Use or disclosure of information on this page is subject to the restrictions in the proprietary notice of this document.

Section	Page
CLEANING/PAINTING	**9-1**
1. General	9-1
2. Equipment and Materials	9-1
3. Cleaning	9-2
A. Clean T2CAS Computer Unit and Mounting Tray	9-2
B. Clean Antennas	9-2
C. Clean Control Panel	9-2
D. Clean VSI/TRA Display	9-3
E. Clean Transponders	9-3
4. Painting	9-3
A. TCAS Directional Antennas	9-3
(1) Scope	9-3
(2) Procedure	9-3
(3) Performance Verification Testing	9-4
B. Other T2CAS System LRUs	9-5
REPAIRS	**10-1**
1. General	10-1
APPENDIX A	**A-1**
APPENDIX B	**B-1**

Use or disclosure of information on this page is subject to the restrictions in the proprietary notice of this document.

List of Illustrations

Figure		Page
Figure 1-1.	TCAS II Advisory Capabilities	1-8
Figure 1-2.	TCAS/Mode S Communication	1-9
Figure 1-3.	TA/RA Airspace Coverage	1-10
Figure 1-4.	Basic TCAS II Installation	1-11
Figure 1-5.	Typical System Configurations	1-15
Figure 1-6.	T2CAS System Aircraft Interface	1-17
Figure 1-7.	TCAS Function System Block Diagram	1-19
Figure 1-8.	TT-950/TT-952 T2CAS Computer Unit (TT-951 Similar)	1-22
Figure 1-9.	T2CAS Airplane Personality Module (APM)	1-35
Figure 1-10.	Directional Antenna	1-37
Figure 1-11.	Typical T2CAS GPS Antenna Coax Sub Kit	1-40
Figure 1-12.	Typical Gables ATC/TCAS Control Panel	1-41
Figure 1-13.	Typical VSI/TRA Display Formats	1-45
Figure 1-14.	VSI/TRA Interface Diagram (41-Pin)	1-48
Figure 1-15.	Typical T2CAS Single Terrain Hazard Display Interface	1-50
Figure 1-16.	XS-950 Data Link Transponder	1-51
Figure 1-17.	RCZ-852 Diversity Mode S Transponder	1-56
Figure 1-18.	TCAS II Display Test Pattern	1-68
Figure 1-19.	Mode 1 - Excessive Descent Rate Envelope	1-69
Figure 1-20.	Mode 2 - Excessive Terrain Closure Rate Envelope	1-69
Figure 1-21.	Mode 3 - Excessive Altitude Loss After Take Off Envelope	1-70
Figure 1-22.	Mode 4 - Unsafe Terrain Clearance Envelope	1-71
Figure 1-23.	Mode 5 - Excessive Glide Path Deviation Envelope	1-71
Figure 1-24.	Excessive Bank Angle Envelope	1-72
Figure 1-25.	Windshear Detection	1-73
Figure 1-26.	Terrain Slices	1-74
Figure 1-27.	Terrain Display Background	1-75
Figure 1-28.	Alert Line	1-76
Figure 1-29.	Terrain Hazard Display Upon Caution Alert	1-76
Figure 1-30.	Terrain Hazard Display Upon A Pull-up Warning	1-77
Figure 1-31.	Terrain Hazard Display Upon An Avoid Terrain Warning	1-78
Figure 1-32.	Standard Self-Test of TAWS/Windshear Functional Areas	1-82

Use or disclosure of information on this page is subject to the restrictions in the proprietary notice of this document.

List of Illustrations (cont)

Figure		Page
Figure 1-33.	TAWS Display Test Pattern	1-83
Figure 2-1.	ACSS King Air C90 TAWS Control Panel/Glareshield Switch Annunciators	2-6
Figure 2-2.	Typical Five-Button B737/757/767 Annunciator Switch Panels	2-7
Figure 2-3.	Typical Single Terrain Hazard Display Annunciator Switch Panel	2-8
Figure 2-4.	GPS Antenna Outline and Installation Drawing	2-11
Figure 2-5.	APM Outline and Installation Drawings	2-13
Figure 2-6.	TT-950/952 T2CAS Computer Unit Outline and Installation Drawing	2-17
Figure 2-7.	TT-951 T2CAS Computer Unit Outline and Installation Diagram	2-25
Figure 2-8.	XS-950 Data Link Transponder Outline and Installation Diagram	2-29
Figure 2-9.	RCZ-852 Mode S Transponder Outline and Installation Diagram	2-33
Figure 2-10.	TCAS Directional and Omnidirectional Antenna Locations	2-39
Figure 2-11.	Directional Antenna Angular Orientation	2-40
Figure 2-12.	Directional Antenna Outline and Installation Diagram	2-41
Figure 2-13.	Directional Antenna Baseplate Outline and Installation Diagram	2-51
Figure 2-14.	Gables G130-XX Control Panel Outline and Installation Diagram	2-55
Figure 2-15.	VSI/TRA Outline and Installation Diagram	2-57
Figure 3-1.	Typical TCAS Installation Types	3-3
Figure 3-2.	T2CAS Computer Tray Mating Connector	3-5
Figure 3-3.	Contact Arrangement for CU Left Top Plug (LTP) Insert	3-6
Figure 3-4.	Contact Arrangement for CU Left Middle Plug (LMP) Insert	3-6
Figure 3-5.	Contact Arrangement for Left Bottom Plug (LBP) Insert	3-7
Figure 3-6.	Contact Arrangement for Right Top Plug (RTP) Insert	3-8
Figure 3-7.	Contact Arrangement for Right Middle Plug (RMP) Insert	3-9
Figure 3-8.	Contact Arrangement for Right Bottom Plug (RBP) Insert	3-10
Figure 3-9.	TCAS Computer Unit Data Loader Connector (J1) Pin Layout	3-11
Figure 3-10.	VSI/TRA 41-Pin Connector Layout	3-17
Figure 3-11.	Typical T2CAS Single Terrain Hazard Display Interface	3-19
Figure 3-12.	Strap Assembly	3-35
Figure 5-1.	VSI/TRA Fault Warning Display	5-3
Figure 5-2.	Extended Self-Test of TAWS/Windshear Functional Areas	5-8
Figure 5-3.	RS-232 PC to TCAS Interface Cable	5-17

Use or disclosure of information on this page is subject to the restrictions in the proprietary notice of this document.

List of Illustrations (cont)

Figure		Page
Figure 6-1.	TCAS Test Menu Page	6-7
Figure 6-2.	Typical System Status Page	6-8
Figure 6-3.	Typical Display Status Page	6-9
Figure 6-4.	Typical RAD/ALT Status Page	6-10
Figure 6-5.	Typical Transponder (XPDR) Status Page	6-11
Figure 6-6.	Typical Program Pins 1/3 Page	6-12
Figure 6-7.	Typical Program Pins 2/3 Page	6-13
Figure 6-8.	Typical Program Pins 3/3 Page	6-14
Figure 6-9.	Help Reference Page	6-16
Figure 6-10.	Suppression Bus Fail Page	6-16
Figure 6-11.	Suppression Bus Clear Page	6-18
Figure 6-12.	Typical Antenna Port Status Page	6-18
Figure 6-13.	Typical Option Pins Status Page	6-19
Figure 6-14.	Extended Self-Test Page (Page 1)	6-21
Figure 6-15.	Extended Self-Test Page (Page 1 of 6)	6-22
Figure 6-16.	Part Numbers Page 1 (Page 2 of 6)	6-23
Figure 6-17.	Part Numbers Page 2 (Page 3 of 6)	6-23
Figure 6-18.	Part Numbers Page 3 (Page 4 of 6)	6-24
Figure 6-19.	Part Numbers Page 4 (Page 5 of 6)	6-24
Figure 6-20.	Part Numbers Page 5 (Page 6 of 6)	6-25
Figure B-1.	T2CAS King Air C90 Interface Block Diagram	B-5

Use or disclosure of information on this page is subject to the restrictions in the proprietary notice of this document.

List of Tables

Table		Page
Acronyms and Abbreviations Table		INTRO-2
Table 1-1.	System Components Manufactured by ACSS	1-2
Table 1-2.	System Components Not Manufactured by ACSS	1-3
Table 1-3.	Directional Antenna Configurations	1-4
Table 1-4.	Control Panel Configurations	1-5
Table 1-5.	VSI/TRA Display Configurations	1-5
Table 1-6.	TT-950/951/952 T2CAS Computer Unit Leading Particulars	1-23
Table 1-7.	GPS Antenna Coax Kit Parts List	1-40
Table 1-8.	Gables G7130 Series Control Panel Leading Particulars	1-42
Table 1-9.	VSI/TRA Leading Particulars	1-46
Table 1-10.	XS-950 Data Link Transponder Leading Particulars	1-52
Table 1-11.	RCZ-852 Diversity Mode S Transponder Leading Particulars	1-57
Table 1-12.	TCAS Traffic Symbols	1-62
Table 1-13.	TAWS/RWS Aural Alerts	1-78
Table 1-14.	Aural Annunciation	1-84
Table 2-1.	Coax Cable/Connector Loss	2-4
Table 3-1.	Gables G7130-XX ATC/TCAS Control Panel Interconnect Data	3-12
Table 3-2.	41-Pin VSI/TRA Interconnect Data	3-14
Table 3-3.	XS-950 Data Link Transponder Interconnect Data	3-21
Table 3-4.	RCZ-852 Diversity Mode S Transponder Interconnect Data	3-29
Table 3-5.	Strap Assembly Strap Assignments	3-34
Table 3-6.	Strap Assembly Programming Instructions	3-35
Table 4-1.	TT-950/951/952 T2CAS Computer Unit Interface Description	4-2
Table 4-2.	Gables Control Panel Interface Description	4-26
Table 4-3.	41-Pin VSI/TRA Interface Description	4-29
Table 4-4.	XS-950 Data Link Transponder Interface Description	4-35
Table 4-5.	RCZ-852 Diversity Mode S Transponder Interface Description	4-44
Table 4-6.	TAWS/RWS Non-Configurable Pinout	4-50
Table 4-7.	Callout Configuration Items	4-56
Table 4-8.	Operator Selectable Options - Default Settings	4-57
Table 4-9.	APM/ASDB Programmable Analog Inputs	4-63
Table 4-10.	Analog Input Voltage Ranges	4-66

Use or disclosure of information on this page is subject to the restrictions in the proprietary notice of this document.

List of Tables (cont)

Table		Page
Table 4-11.	Analog Input Impedance	4-67
Table 4-12.	3W Synchro AC References	4-67
Table 4-13.	APM/ASDB Programmable Digital Inputs	4-68
Table 4-14.	APM/ASDB Programmable Digital Outputs	4-69
Table 4-15.	Source Destination Identifier (SDI)	4-70
Table 4-16.	Sign Status Matrix (SSM) [BNR]	4-70
Table 4-17.	Sign Status Matrix (SSM) [BCD]	4-71
Table 4-18.	APM/ASDB Programmable Discrete Inputs	4-72
Table 4-19.	APM/ASDB Programmable Discrete Outputs	4-73
Table 4-20.	Navigation Accuracy	4-79
Table 4-21.	True Display Orientation Left	4-84
Table 4-22.	True Display Orientation Right	4-84
Table 4-23.	A429 Output Bus GCAM Event Data Labels	4-87
Table 4-24.	OMS Label 350 Discretes	4-89
Table 4-25.	OMS Label 351 Discretes	4-90
Table 4-26.	OMS Label 352 Discretes	4-91
Table 5-1.	Equipment	5-1
Table 5-2.	Computer Unit Harness Checkout	5-1
Table 5-3.	Extended Test Menu Selections	5-5
Table 5-4.	Compact Flash Upload / LED correlation	5-13
Table 6-1.	TCAS Aural and VSI/TRA Annunciations	6-4
Table 6-2.	System Status Page Fault Messages	6-8
Table 6-3.	Computer Unit Self-Test Execution	6-26
Table 6-4.	TCAS Fault Reporting and Corrective Actions	6-28
Table 6-5.	Antenna Wiring Resistance	6-29
Table 7- 1.	Materials	7-1
Table 9-1.	Equipment and Materials	9-1
Table 10-1.	LRU Maintenance Manual	10-1
Table B-1.	Aircraft Configuration	B-3

Use or disclosure of information on this page is subject to the restrictions in the proprietary notice of this document.

INTRODUCTION

1. General

This manual provides general system installation and maintenance instructions and theory of operation for the T2CAS Traffic and Terrain Collision Avoidance System. It also provides interface information and interconnect diagrams to permit a general understanding of the overall system.

The purpose of this manual is to help install, operate, maintain and troubleshoot the T2CAS Traffic and Terrain Collision Avoidance System in the aircraft. Common system maintenance procedures are not presented in this manual. The best established shop and flight line practices should be used.

NOTE: The conditions and tests required for Technical Standard Order (TSO) approval of this article are minimum performance standards. It is the responsibility of those installing this article either on or within a specific type or class of aircraft to determine that the aircraft installation conditions are within the TSO standards. The article may be installed only if the installation is performed in accordance with the applicable airworthiness and production requirements.

2. Reference Documents

Publications on subsystems installed as part of the T2CAS Traffic and Terrain Collision Avoidance System are identified in the list that follows:

Document Title	Honeywell Publication Number
Mode S Data Link Transponder System Description and Installation Manual	A09-3839-001
PRIMUS II SRZ-85X Series Integrated Radio System Operation and Installation Manual (Used if transponders or control panel is part of PRIMUS II Integrated Radio System)	A15-3800-01
Handling, Storage, and Shipping Procedures Instruction Manual for Avionics Equipment	A09-1100-01

Use or disclosure of information on this page is subject to the restrictions in the proprietary notice of this document.

3. Weights and Measurements

Weights and measurements in this manual use both U.S. and S.I. (metric) values.

4. Acronyms and Abbreviations

The letter symbols for abbreviations are the same as shown in ANSI/IEEE Std 260 and ASME Y1.1, except as identified in the acronyms and abbreviations table.

Acronyms and Abbreviations Table

Term	Definition
ac	alternating current
ACD	APM configuration data
ADC	air data computer
ADIRS	air data inertial reference system
ADL	airborne data loader
ADLP	airborne data link processor
ADS-B	automatic dependent surveillance broadcast
AGL	above ground level
AHRS	attitude heading and reference system
ALT	altitude
AMM	aircraft maintenance manual
ANT	antenna
APM	airplane personality module
ATC	air traffic control
ATCRBS	air traffic control radar beacon system
ATN	Aircraft Telecommunications Network
ASDB	aircraft specific database
BITE	built-in test equipment
BOT	bottom
BNR	binary
CAS	collision avoidance system
CFDIU	centralized fault display interface unit
CFDS	central fault display system
CFIT	controlled flight into terrain
CMC	central maintenance computer

Use or disclosure of information on this page is subject to the restrictions in the proprietary notice of this document.

Acronyms and Abbreviations Table (cont)

Term	Definition
CMM	component maintenance manual
CPA	collision prediction and alerting
COMM	communication
CRC	cyclic redundancy check
CU	computer unit
DADC	digital air data computer
dc	direct current
DISP	display
DH/MDA	decision height/minimum descent altitude
DLP	data link processor
DSWC	digital stall warning computer
EFIS	electronic flight instrument system
ELM	extended length message
EPROM	erasable programmable read-only memory
FAA	Federal Aviation Administration
FDR	flight data recorder
FPM	feet per minute
FMS	flight management system
GCAM	ground collision avoidance module
GPS	global positioning system
GPWS	Ground Proximity Warning System
HDG	heading
HMN	Honeywell Material Number
I/O	input/output
INH	inhibit
IPC	illustrated parts catalog
IRS	inertial reference system
LBP	left bottom plug
LCD	liquid crystal display
LMP	left middle plug
LRU	line replaceable unit

Use or disclosure of information on this page is subject to the restrictions in the proprietary notice of this document.

Acronyms and Abbreviations Table (cont)

Term	Definition
LSB	least significant bit
LTP	left top plug
MCU	modular concept unit
MEL	minimum equipment list
Mode S	mode select transponder
MSB	most significant bit
MTBF	mean time between failures
MTL	minimum trigger level
OMS	on-board maintenance system
PDL	portable data loader
PMS	performance management system
POST	power-on self-test
PROG	program
PTM	pressure transducer module
RA	resolution advisory
RAD ALT	radio altimeter
RBP	right bottom plug
RCB	radio communication bus
RMP	right middle plug
RMU	radio management unit
RNG	range
RTP	right top plug
RWS	reactive windshear
SDI	source destination identifier
SPI	special pulse identifier
SSM	sign status matrix
STBY	standby
TA	traffic advisory
TAWS	terrain awareness warning system
TCAS	traffic alert and collision avoidance system
T2CAS	traffic and terrain collision avoidance system

Use or disclosure of information on this page is subject to the restrictions in the proprietary notice of this document.

Acronyms and Abbreviations Table (cont)

Term	Definition
TRA	traffic resolution advisory
TSO	Technical Standard Order
VSI	vertical speed indicator
VSWR	voltage standing wave radio
WOW	weight-on-wheels
XPDR	transponder

Use or disclosure of information on this page is subject to the restrictions in the proprietary notice of this document.

5. Special Precautions

Warnings, cautions, and notes in this manual give the data that follows:

- A WARNING is an operation or maintenance procedure or condition, which, if not obeyed, can cause injury or death
- A CAUTION is an operation or maintenance procedure or condition, which, if not obeyed, can cause damage to the equipment
- A NOTE gives data to make the work easier or gives directions to go to a procedure.

All personnel who operate and do maintenance on the TCAS components and on the applicable test equipment, must know and obey the safety precautions. The warnings and cautions that follow apply to all parts of this manual.

WARNING: HIGH VOLTAGES MAY BE PRESENT ON SYSTEM INTERCONNECT CABLES. MAKE SURE THAT SYSTEM POWER IS OFF BEFORE YOU DISCONNECT LRU MATING CONNECTORS.

CAUTION: ACSS HAS PREPARED AN AIRWORTHINESS CRITICAL REQUIREMENTS ANALYSIS FOR THIS AIRBORNE EQUIPMENT TO MAKE SURE THAT IT WILL NOT CAUSE A DANGEROUS IN-FLIGHT CONDITION. SPECIFIC PARTS, TESTS, AND PROCEDURES THAT ARE IDENTIFIED AS *INSTALLATION* CRITICAL IN THE ANALYSIS ARE CHANGED TO AIRWORTHINESS CRITICAL IN THIS MANUAL. IT IS NECESSARY TO DO THESE PROCEDURES AND TESTS TO GET THE APPROVED RESULTS.

CAUTION: THE T2CAS SYSTEM CONTAINS LRUS THAT ARE ELECTROSTATIC DISCHARGE SENSITIVE (ESDS). IF YOU DO NOT OBEY THE NECESSARY CONTROLS, A FAILURE OR UNSATISFACTORY OPERATION OF THE UNIT CAN OCCUR FROM ELECTROSTATIC DISCHARGE. USE APPROVED INDUSTRY PRECAUTIONS TO KEEP THE RISK OF DAMAGE TO A MINIMUM WHEN YOU TOUCH, REMOVE, OR INSTALL LRUS.

Use or disclosure of information on this page is subject to the restrictions in the proprietary notice of this document.

SYSTEM DESCRIPTION

1. General

The T2CAS Traffic and Terrain Collision Avoidance System combines a terrain awarness warning system (TAWS) with the existing TCAS 2000 line replaceable unit (LRU) to form a combined system (T2CAS). Optionally, the T2CAS may contain Reactive Windshear (RWS) and/or global positioning satellite (GPS) functions within the same LRU. The integration of the functions provides significant cost and space advantages to the customer. The implementation method used preserves the independence of the TCAS, TAWS Reactive Windshear and GPS functions within the T2CAS LRU. The system reliability for the T2CAS LRU is greater than a federated system with separate TCAS, TAWS and RWS LRUs.

The TCAS function, within T2CAS, determines the range, altitude, and bearing of other aircraft equipped with Mode S/Air Traffic Control Radar Beacon System (ATCRBS) transponders, with respect to the location of own aircraft. It also monitors the trajectory of these aircraft for the purpose of determining if any of them constitute a potential collision hazard. The TCAS function is responsible for estimating the projected intruder track and determining if a potential conflict exists. If so, the system displays an advisory to the pilot. The system also provides guidance for the optimum vertical avoidance maneuver. Complementary avoidance maneuvers between two TCAS equipped aircraft are ensured by coordination of mutual intentions with the other aircraft through the Mode S Transponders. T2CAS TCAS meets the requirements of TSO-C119b.

The T2CAS TAWS function, within the T2CAS, provides both Collision Prediction and Alerting (CPA) as well as conventional Ground Proximity Warning System (GPWS) modes of operation. The CPA uses data provided by the Flight Management Computer, the GPS receiver, and other aircraft subsystems to predict a 3-D flight path based upon a curve-fit extrapolation of the most recent position and velocity data received. This predicted flight path is then compared with the internal terrain profile of the immediate area and the CPA algorithm computes an assessment of the potential threat of aircraft collision with terrain. When operative, CPA replaces RTCA DO-161A reactive modes 1 and 2 since it offers superior safety margins for controlled flight into terrain (CFIT) prevention due to its predictive capabilities. Since modes 1 and 2 are the primary source of nuisance alerts, suppressing these alerts greatly reduces the nuisance alert rate and thus improves pilot confidence in the system. T2CAS TAWS meets the requirements of TSO-C151a Class A.

A Reactive Windshear function is integrated in T2CAS when necessary to meet the aircraft application, and meets the requirements of TSO-C117a.

The T2CAS RWS function incorporates a Reactive Windshear feature as part of its basic functionality. It conforms to the Windshear Warning capabilities described in TSO C117a without the guidance feature. The reactive Windshear Warning algorithm continuously monitors wind factors that affect aircraft performance on both take-off and landing approach, in order to identify the presence of a severe low-level, downburst/microburst-type shear. If these wind factors cause aircraft performance to decrease to a predetermined level, an audio warning is sounded, indicating to the crew that the aircraft net performance capability is deteriorating and rapidly approaching a critical state. In addition to the warning, the Windshear Warning algorithm provides a caution when an increasing-performance Windshear is detected, thus giving advance warning of decreasing-performance windshear.

Use or disclosure of information on this page is subject to the restrictions in the proprietary notice of this document.

2. System Components

Table 1-1 gives the components that are supplied by ACSS. Table 1-2 gives the components that are necessary, but are not manufactured by ACSS.

Table 1-3 thru Table 1-5 provide additional component descriptions as follows:

- Table 1-3. Directional Antenna Configurations
- Table 1-4. Control Panel Configurations
- Table 1-5. VSI/TRA Display Configurations.

Table 1-1. System Components Manufactured by ACSS

Component	Model No.	ACSS Part No.
T^2CAS Computer Unit (6-MCU size unit without GPS)	TT-950	9000000-10001
T^2CAS Computer Unit (6-MCU size unit with GPS)	TT-952	9000000-20001
T^2CAS Computer Unit (4-MCU size unit without GPS)	TT-951	9000000-55001
Directional Antenna (See Table 1-3 for configuration descriptions)	--	7514081-VAR or 7514060-VAR
GPS Antenna (Required with T^2CAS Model TT-952)	--	AT575-143WAC-TNCF-000-06-NM or AT575-143WAC-TNCF-000-30-NM
TAWS Terrain Display (3 ATI or 5 ATI)	--	TBD - Not yet available for delivery
TAWS Control Panel	--	N/A - Installation specific
APM	AP-950	9000001-10001
Mode S Data Link Transponder (4-MCU size unit)	XS-950	7517800-xxyyy
Diversity Mode S Transponder	RCZ-852	7510700-850
Installation Kit for RCZ-852 Mode S Transponder (Contains mounting tray, 106 pin ARINC 404 mating connector and two TNC RF jack connectors)	IK-415	7510707-968
NOTE: The 3-ATI panel mount comes in three different color options: -901 (gray), -902 (brown), and -903 (black).		

Use or disclosure of information on this page is subject to the restrictions in the proprietary notice of this document.

Table 1-2. System Components Not Manufactured by ACSS

Component	Comments
Gables G7130 Series ATC/TCAS Dual Transponder Control Panel (Note 1.)	General aviation type controller that operates from 28 V dc aircraft power (Note 2.)
Gables G6990, G6991, G6992 and G6993 Series Mode S/TCAS Control Panels (Note 1.)	Commercial aviation type controllers that operate from 115 V ac aircraft power (Note 2.)
Gables G7491 Flight ID Control Panel	Commercial aviation type Flight ID Control Panel that operates from 115 V ac aircraft power (Note 2.)
Omnidirectional TCAS Antenna (Note 4.)	ATC blade antenna, dc shorted, TSO C119b compliant,1030 to 1090 MHz. Installer to supply antenna.
Omnidirectional ATC Antennas (Note 5.)	ATC blade antenna, dc shorted, TSO C112 compliant, 1030 to 1090 MHz. Installer to supply antenna.
GPS Antenna Coax Cable	TBD
Thales VSI/TRA (Note 3.)	High resolution LCD flat panel Vertical Speed Indicator with TCAS II data in RA and TA modes.
Mounting Tray, T2CAS Computer (6-MCU size unit)	ARINC 600 6-MCU Mount, cooling air required. Installer to supply mount.
Mounting Tray, T2CAS Computer (4-MCU size unit)	ARINC 600 4-MCU Mount, no cooling air required. Installer to supply mount.
Mounting Tray, Data Link Transponder (4-MCU size unit)	ARINC 600 4-MCU Mount, cooling air recommended but not required. Installer to supply mount.

NOTES:

1. Refer to Table 1-4 for individual part number descriptions.
2. For additional information, pricing and availability contact:
   Gables Engineering, Inc. 247 Greco Avenue, Coral Gables, Florida 33146
   Telephone (305) 774-4400
   Fax (305) 774-4465
3. For additional information, pricing and availability contact:
   Thales Communications, Inc.
   Aviation Electronics Division
   22605 Gateway Center Drive
   CLARKSBURG, MD 20871-2001, USA
   Telephone +1 (240) 864-7639
4. A bottom omnidirectional antenna can be used as an optional replacement for the directional antenna.
5. A diversity transponder installation requires both a top and bottom ATC antenna.

Use or disclosure of information on this page is subject to the restrictions in the proprietary notice of this document.

Table 1-3. Directional Antenna Configurations

Antenna Part Number	Description
7514081-901	Directional antenna with flat base, four hole mounting pattern, and 1.560-inch connector extension length
7514081-902	Directional antenna with flat base, eight hole mounting pattern, and 1.560-inch connector extension length
7514081-903	Directional antenna with a curved 61.52-inch radius base, eight hole mounting pattern, and 1.560-inch connector extension length
7514081-904	Directional antenna with a curved 66.52-inch radius base, eight hole mounting pattern, and 1.560-inch connector extension length
7514081-905	Directional antenna with a curved 74.02-inch radius base, eight hole mounting pattern, and 1.560-inch connector extension length
7514081-906	Directional antenna with a curved 77.78-inch radius base, eight hole mounting pattern, and 1.560-inch connector extension length
7514081-907	Directional antenna with a curved 99.02-inch radius base, eight hole mounting pattern, and 1.560-inch connector extension length
7514081-908	Directional antenna with a curved 111.02-inch radius base, four hole mounting pattern, and 1.560-inch connector extension length
7514081-909	Directional antenna with a curved 118.52-inch radius base, eight hole mounting pattern, and 1.560-inch connector extension length
7514081-910	Directional antenna with a flat base, eight hole mounting pattern, and 0.705-inch connector extension length
7514081-911	Directional antenna with a curved 77.78-inch radius base, eight hole mounting pattern, special 0.015-inch Teflon gasket, and 1.560-inch connector extension length
7514081-912	Directional antenna with a curved 111.02-inch radius base, eight hole mounting pattern, special 0.015-inch Teflon gasket, and 1.560-inch connector extension length
7514081-913	Directional antenna with a flat base, four hole mounting pattern, and 0.705-inch connector extension length
7514081-914	Directional antenna with a curved 53.02-inch radius base, eight hole mounting pattern, and 0.705-inch connector extension length
7514081-915	Directional antenna with a curved 44.80-inch radius base, eight hole mounting pattern, and 0.705-inch connector extension length
7514081-916	Directional antenna with a curved 42.00-inch radius base, eight hole mounting pattern, and 0.705-inch connector extension length
7514081-917	Directional antenna with a curved 85.06-inch radius base, eight hole mounting pattern, and 1.560-inch connector extension length

Use or disclosure of information on this page is subject to the restrictions in the proprietary notice of this document.

Table 1-4. Control Panel Configurations

Gables Control Panels	
Gables G7130-02	Control Panel, Dual Mode S/TCAS, Rotary knob 4096 code entry, Black Bezel, Operates from +28 V dc aircraft power
Gables G7130-05	Control Panel, Dual Mode S/TCAS, Rotary knob 4096 code entry, Gray Bezel, Operates from +28 V dc aircraft power
Gables G7130-06	Control Panel, Dual Mode S/TCAS, Rotary knob 4096 code entry, Black Bezel, Extended Range (80, 120 Mi), Operates from +28 V dc aircraft power
Gables G7130-07	Control Panel, Dual Mode S/TCAS, Rotary knob 4096 code entry, Gray Bezel, Extended Range (80, 120 Mi), Operates from +28 V dc aircraft power
Gables G6990-XX	Control Panel, Dual Mode S/TCAS, Pushbutton 4096 code entry, Operates from 115 V ac aircraft power
Gables G6991-XX	Control Panel, Single Mode S-Single ATCRBS/TCAS, Pushbutton 4096 code entry, Operates from 115 V ac aircraft power
Gables G6992-XX	Control Panel, Dual Mode S/TCAS, Rotary knob 4096 code entry, Operates from 115 V ac aircraft power
Gables G6993-XX	Control Panel, Single Mode S-Single ATCRBS/TCAS, Rotary knob 4096 code entry, Operates from 115 V ac aircraft power
Gables G7491-XX	Control Panel, Flight ID (Only), Operates from 115 V ac aircraft power

Table 1-5. VSI/TRA Display Configurations

VSI/TRA Part Number	Description
Thales VSI/TRA	The VSI/TRA Display provides continuous TCAS symbology and non-ARINC display control features: mile ranges and above/normal/below display volumes. It has pin programmable altitude band, range, lighting curve, and VSI source selection.
457400xxyyyy	xx = Hardware Version as defined in Table TBD yyyy = Software Version as defined in Table TBD

Use or disclosure of information on this page is subject to the restrictions in the proprietary notice of this document.

3. System Description

The T2CAS is a safety system that combines TCAS, Terrain Awareness and Warning System (TAWS), and optionally Reactive Windshear (RWS) and/or GPS functions in a single LRU.

The TCAS function is an onboard advisory system designed to act as a backup to the air traffic control (ATC) radar and the “see and avoid” procedures. By computing the closure rate and altitude of all transponder equipped aircraft in the surrounding airspace, the TCAS can anticipate a potential midair collision before it has a chance to materialize.

TCAS continually plots local air traffic on the associated display, and in the event of a conflicting flightpath, guides the pilot towards the correct avoidance maneuver. If the intruding aircraft is also equipped with a TCAS II compatible system, the two systems can communicate their mutual intentions through the Mode S transponders. The coordinated advisories that result allow the two pilots to execute complementary avoidance maneuvers.

TCAS complies with ARINC Characteristic 735a (TCAS) and the requirements of TSO-C119b.

The TAWS function within T2CAS features an innovative design aimed at preventing CFIT (Controlled Flight Into Terrain) accidents by providing timely aircrew alerts. The alerts are based upon predicted terrain clearance profiles calculated with present aircraft climb capabilities. This represents a significant advance in capability from the present Ground Proximity Warning System (GPWS) technology, and a significant improvement in CFIT safety margins over existing Terrain Awareness and Warning System (TAWS) designs:

- By providing warnings based on remaining time before pilot response is required and not based on remaining time to terrain impact
- By covering more operational situations
- By drastically minimizing nuisance alerts.

As an optional part of the TAWS system, T2CAS incorporates a Reactive Windshear feature as part of its basic functionality. It conforms to the Windshear Warning capabilities described in TSO C117a without the guidance feature. The Reactive Windshear function monitors wind factors that affect aircraft performance on both take-off and landing approach, in order to identify the presence of a severe low-level, downburst/microburst-type windshear.

A. System Functional Description

(1) TCAS Functional Description

Situational awareness is provided to the flight crew by aiding in visually acquiring intruding aircraft and discriminating between the intruding aircraft, threat aircraft, and other traffic in the airspace.

Vertical guidance to avoid midair collisions is accomplished by interrogating the Mode A, Mode C, and Mode S transponders of potential threat aircraft, tracking their responses, and providing advisories to the flight crew to assure vertical separation.

Use or disclosure of information on this page is subject to the restrictions in the proprietary notice of this document.

The first two levels of situational awareness include:

- Non-threat Traffic, indicates other targets within the range of the display whose relative altitude is greater than ±1200 ft. vertically or a distance greater than six nautical miles from own aircraft.
- Proximity Traffic, indicates the target is within ±1200 ft. vertically or within six nautical miles of own aircraft.

The two levels of advisories include:

- Traffic advisories (TA) indicate the range, bearing, and relative altitude of the intruder to aid in visual acquisition of the intruder.
- Resolution advisories (RA) indicate a vertical maneuver to be performed or avoided in order to assure safe separation.

Traffic advisories can be displayed on a Vertical Speed Indicator/Traffic and Resolution Advisory (VSI/TRA) display, Electronic Flight Instrument System (EFIS) or any instrument that displays the appropriate symbology and conforms to the definition of ARINC Characteristic 735A.

Resolution advisories can be displayed on the VSI/TRA display, EFIS or any other indicator that displays the appropriate symbology and conforms to the definition of ARINC Characteristic 735A.

Figure 1-1 shows the various types of intruder equipment and the resulting advisories. It should be noted that Mode A equipped intruders result in detection and display of TAs only. An intruder not equipped with a transponder is invisible to TCAS.

Communication with another TCAS equipped aircraft is provided by an onboard diversity Mode S transponder. Only one onboard Mode S transponder is required for TCAS operation. However, the ACSS TCAS operates with either of two onboard Mode S transponders, one of which operates as a spare. The transponder in use is selectable from the Flight Deck. Figure 1-2 shows the communication between two TCAS equipped aircraft.

Use or disclosure of information on this page is subject to the restrictions in the proprietary notice of this document.

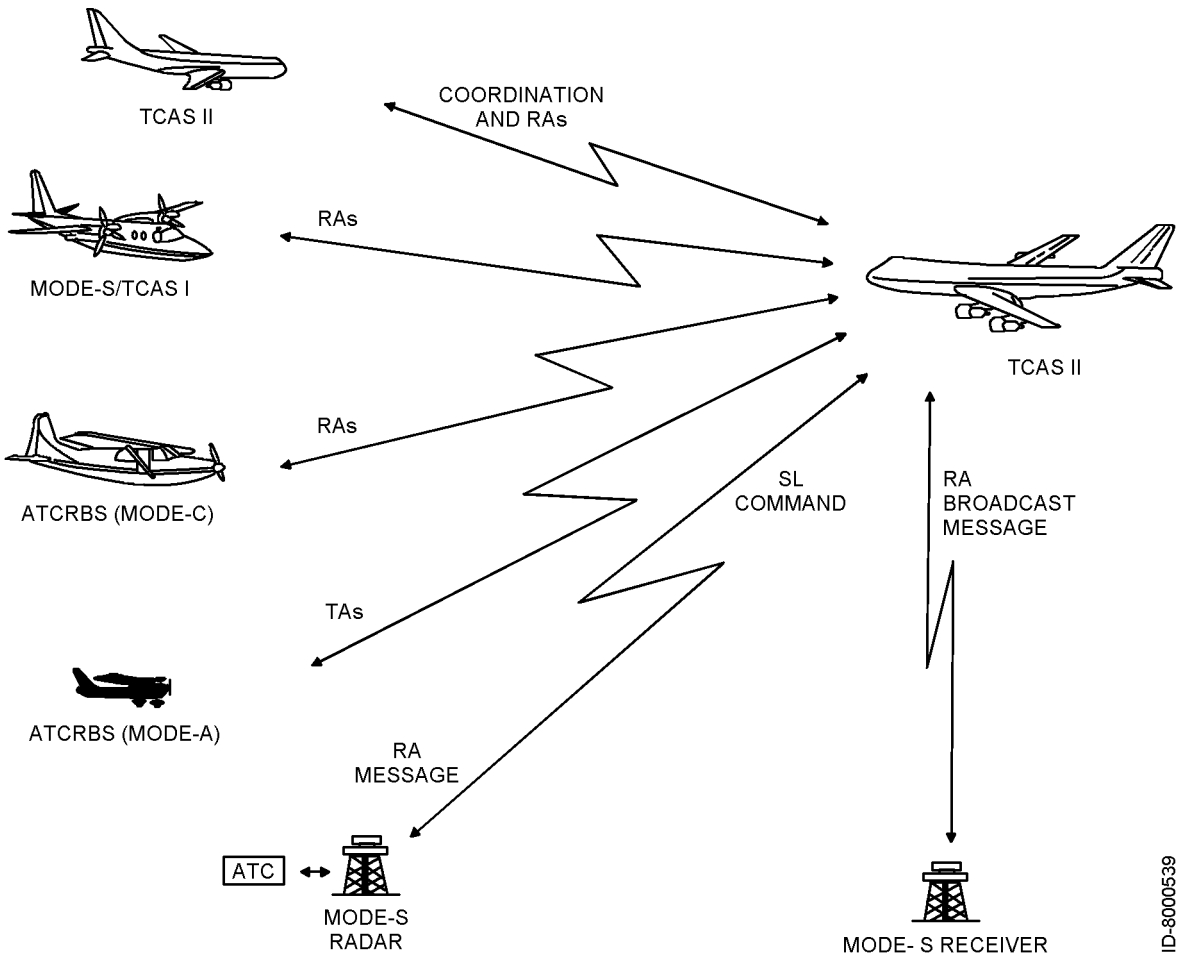

Figure 1-1. TCAS II Advisory Capabilities

Use or disclosure of information on this page is subject to the restrictions in the proprietary notice of this document.

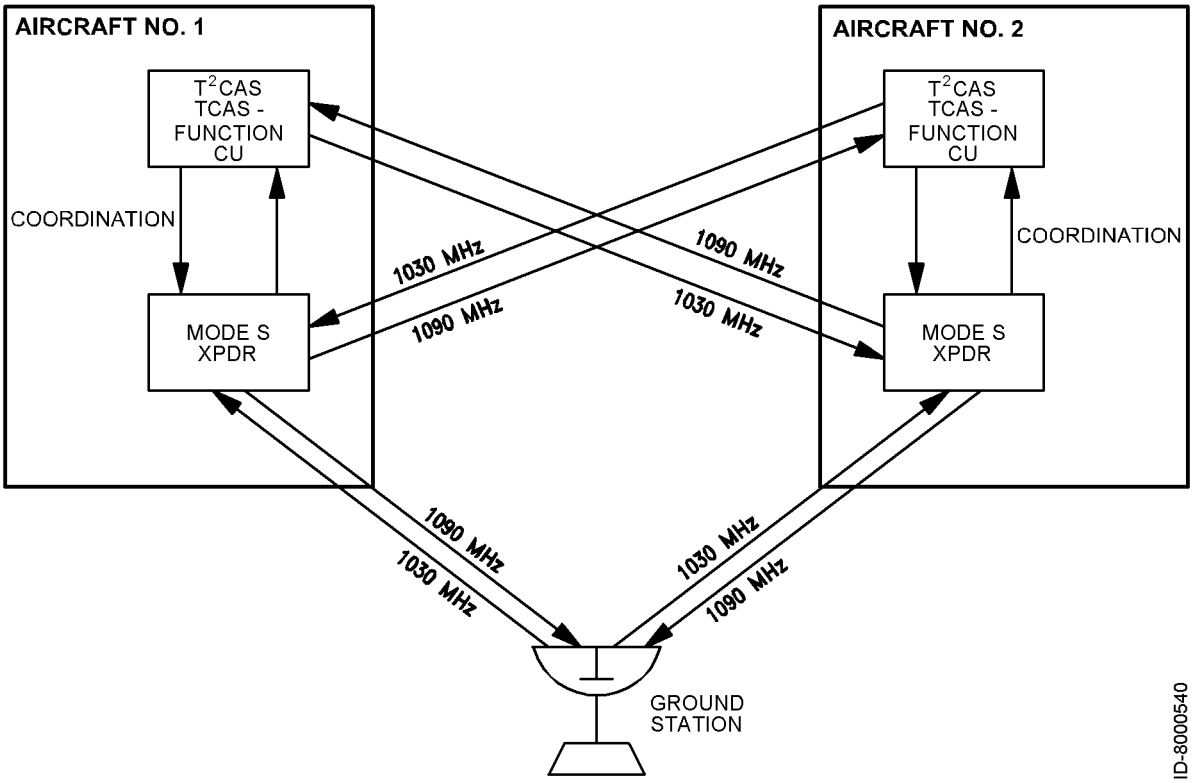

Figure 1-2. TCAS/Mode S Communication

The TCAS function generates both RAs and TAs when the TA/RA mode is selected. The two types of advisories correspond to time-based protection zones around the aircraft. The airspace around the TCAS aircraft where an RA is annunciated represents the warning area, while the larger airspace which results in a TA being annunciated is the caution area. Figure 1-3 contrasts the airspace covered by the two types of advisories.

The onboard equipment listed below must be linked to the TCAS function as shown in Figure 1-4.

- Mode S transponder with associated antennas
- Radio altimeter
- Air Data Computer (ADC) (digital or analog). If an ADC does not support vertical speed rate data, the static line can be run directly into the Thales VSI/TRA.
- ATC/TCAS control panel. A separate control panel is not the only method of control for the TCAS. Other components, such as a Radio Management Unit (RMU) can be used.
- Omnidirectional antenna. The TCAS function accepts two types of bottom antennas: A standard directional antenna or an optional ATC-type omnidirectional antenna. If an omnidirectional antenna is installed, it must be supplied by the installer. If a directional antenna is installed at both top and bottom antenna locations, a bottom omnidirectional antenna is not needed.

Use or disclosure of information on this page is subject to the restrictions in the proprietary notice of this document.

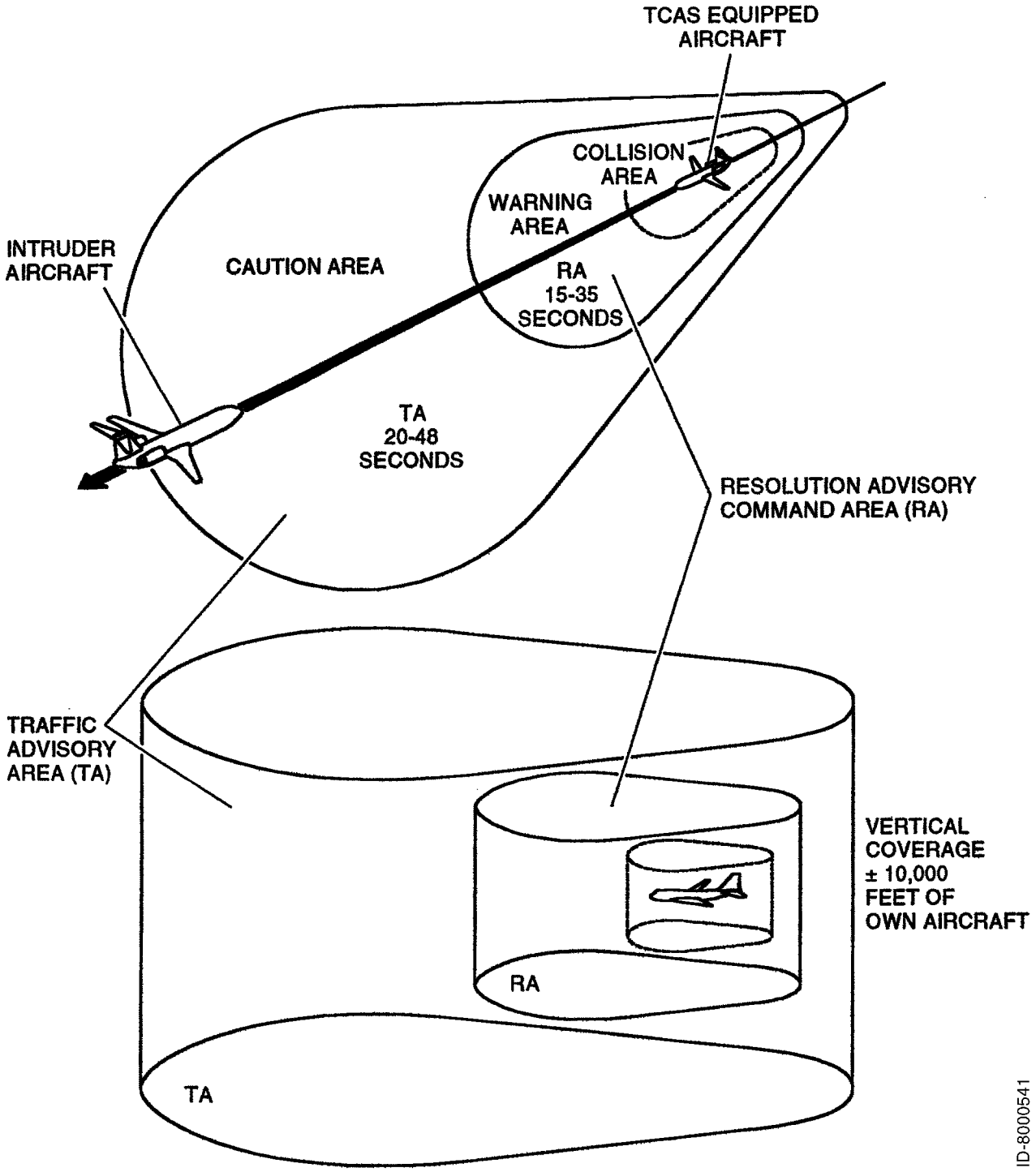

Figure 1-3. TA/RA Airspace Coverage

Use or disclosure of information on this page is subject to the restrictions in the proprietary notice of this document.

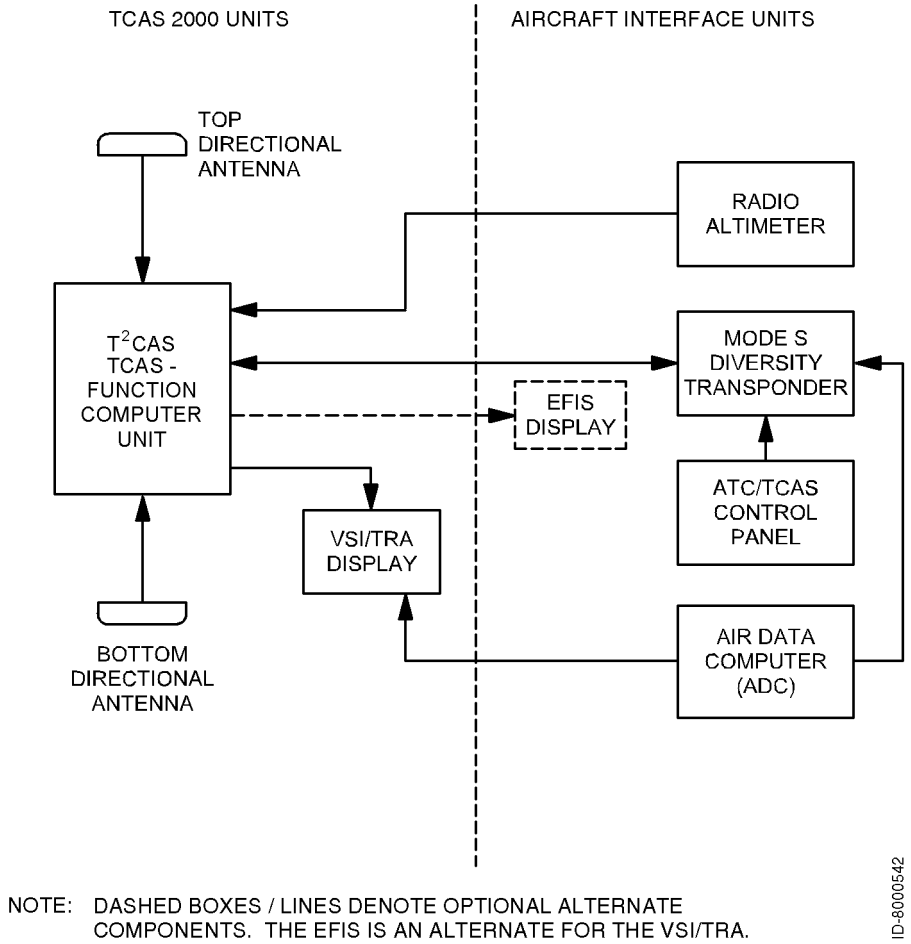

NOTE: DASHED BOXES / LINES DENOTE OPTIONAL ALTERNATE COMPONENTS. THE EFIS IS AN ALTERNATE FOR THE VSI/TRA.

Figure 1-4. Basic TCAS II Installation

(2) TAWS Functional Description

The T2CAS TAWS function provides guidance to prevent Controlled Flight Into Terrain (CFIT). This is accomplished by using vertical speed, ground speed, track angle, flight path angle, latitude, longitude, flap status, steep approach status, static air temperature, roll angle, pressure altitude and radio altitude inputs along with a built-in database for determination of alerts and display of terrain information.

The following advanced functional capabilities are featured in the T2CAS TAWS function.

(a) Collision Prediction and Alerting (CPA) Mode

This mode provides medium-term (caution) and short-term (warning) alerts when the predicted flight path will bring the aircraft dangerously close to nearby terrain. When operative, CPA replaces RTCA DO-161A reactive modes 1 and 2 since it offers superior safety margins for CFIT prevention due to its predictive capabilities.

Use or disclosure of information on this page is subject to the restrictions in the proprietary notice of this document.

T2CAS uses data provided by the Flight Management Computer, the GPS receiver, and other aircraft subsystems to predict a 3-D flight path based upon a curve-fit extrapolation of the most recent position and velocity data received. This predicted flight path is then compared with the internal terrain map of the immediate area and an assessment of the potential threat of aircraft collision with terrain is computed by the Collision Prediction and Alerting (CPA) algorithm.

(b) Conventional GPWS Modes of Operation.

1 Mode 1: Excessive rate of descent with respect to terrain

When the CPA mode is inoperative, this mode provides not only a reactive short-term warning as defined in RTCA DO-161A, but also a reactive medium-term caution when the current flight path is descending toward the terrain ahead of the aircraft at an excessive rate.

2 Mode 2: Excessive closure rate to terrain

When the CPA mode is not operative, this mode provides a reactive short-term warning as defined in RTCA DO-161A when the current flight path and the terrain ahead of the aircraft are closing at an excessive rate.

3 Mode 3: Excessive altitude loss after take-off

T2CAS meets the requirement for Mode 3 alerts as defined in RTCA DO-161A. This mode provides an alert when there is a loss of altitude after take-off or during a missed approach. The mode uses the radar altimeter to determine proximity to the ground and the barometric altimeter to determine altitude loss. If an excessive loss of altitude occurs after take-off, a warning is issued.

4 Mode 4: Incorrect aircraft configuration with regard to terrain

T2CAS meets the requirement for Mode 4 alerts as defined in RTCA DO-161A. Mode 4 usually applies during the landing phase of flight and results in the annunciation of an alert in the event of insufficient terrain clearance when the aircraft is not in the proper landing configuration. Mode 4 consists of the following two submodes:

- Mode 4A, when the landing gear is up
- Mode 4B, when the landing gear is down, but the flaps are not in landing configuration.

5 Mode 5: Excessive glide path deviation

T2CAS meets the requirement for Mode 5 alerts as defined in RTCA DO-161A. Mode 5 applies in the event of an excessive descent below the instrument glide path when making a front-course approach with the gear down. In a back-course landing configuration, Mode 5 is automatically inhibited.

Use or disclosure of information on this page is subject to the restrictions in the proprietary notice of this document.

6 Call-outs and excessive bank angle

As defined in RTCA DO-161A, T^{2}CAS produces call-outs and alerts for descent below a set of predefined altitudes and for excessive bank angle.

(c) Terrain Display

The T^{2}CAS TAWS function provides two outputs to ARINC 708A compatible displays to provide terrain-related information to the crew through the weather radar or EFIS displays in order to enhance flight crew situational awareness. When no threat is perceived, the TAWS display shows with different levels of colors, the height of the surrounding terrain relative to the aircraft altitude and taking into account the aircraft flight path angle. Upon detection of a potential CFIT threat, the terrain texture is modified on the terrain map in order to identify the location and level (caution/warning) of the threat.

(3) RWS Functional Description

T^{2}CAS may incorporate optionally a Reactive Windshear feature as part of its basic functionality. This feature conforms to the Windshear Warning capabilities described in TSO C117a without the guidance feature. The reactive Windshear Warning algorithm continuously monitors wind factors that affect aircraft performance on both take-off and landing approach, in order to identify the presence of a severe low-level, downburst/microburst-type windshear.

If these wind factors cause aircraft performance to decrease to a predetermined level, an audio warning is sounded, indicating to the crew that the aircraft net performance capability is deteriorating and rapidly approaching a critical state. In addition to the warning, the Windshear Warning algorithm provides a caution when an increasing-performance Windshear is detected, thus giving advance warning of decreasing-performance windshear.

(4) GPS Functional Description

The T^{2}CAS may optionally incorporate a Global Positioning System (GPS) receiver. The GPS receiver is a CCA that is independent of both TCAS and TAWS/RWS, and has an independent processor and I/O circuitry. The GPS receiver is manufactured and supplied to ACSS by CMC Electronics. The GPS receiver is capable of providing position information to the T^{2}CAS as well as to other aircraft systems.

B. System Configurations

The T^{2}CAS may be installed in different aircraft configurations depending on the current TCAS, TAWS/RWS and GPS equipment installed on the aircraft. The T^{2}CAS uses an Airplane Personality Module (APM) to hold aircraft specific configuration data for TAWS and RWS functions. The APM is used in place of program pin inputs to provide system configuration. An Aircraft Specific Database (ASDB) provides the aircraft specific interface requirements for the T^{2}CAS System and is loaded into the APM at the time of system installation.

Use or disclosure of information on this page is subject to the restrictions in the proprietary notice of this document.

Further breakdown of the TCAS and TAWS/RWS system configurations are detailed in the sections 1 and 2 that follow.

(1) TCAS System Configuration

The T2CAS unit's TCAS function may be installed in several different configurations depending on the transponders used and the choice of antennas and displays. Some typical configurations are shown in Figure 1-5. Other combinations are feasible. Figure 1-7 shows the signals and overall interconnects for a typical T2CAS installation with dual transponders.

- Configuration A shows the TCAS function linked to dual Mode S transponders. The system operates with either transponder, depending on the control panel selection. The second transponder is used as a backup.
- Configuration B shows the TCAS function linked to a single transponder Mode S transponder system.
- Configuration C shows the TCAS function to a single Mode S transponder (active) and an ATCRBS transponder (backup). The TCAS only operates when the Mode S transponder is selected.

(2) TAWS/RWS System Configuration

Figure 1-6 illustrates a typical aircraft installation of the T2CAS. The system is designed as an integrated safety solution, available as a replacement to the existing TCAS 2000 LRU. Figure 1-7 is a TCAS Function System block diagram.

Use or disclosure of information on this page is subject to the restrictions in the proprietary notice of this document.

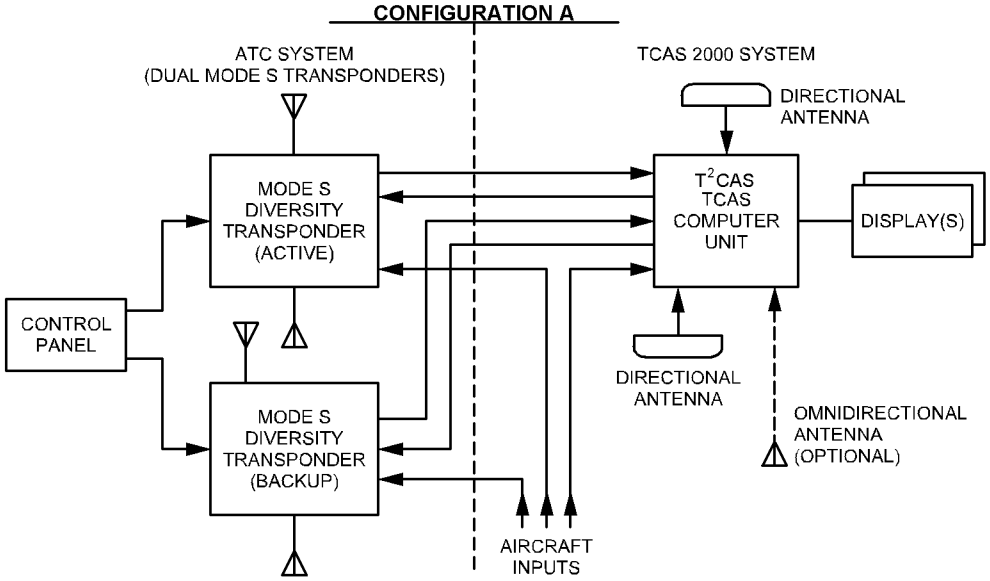

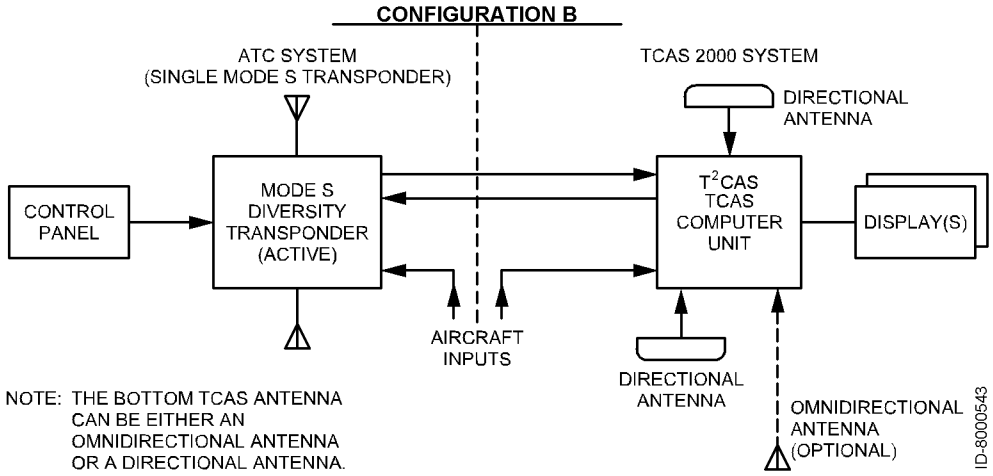

Figure 1-5 (Sheet 1). Typical System Configurations

Use or disclosure of information on this page is subject to the restrictions in the proprietary notice of this document.

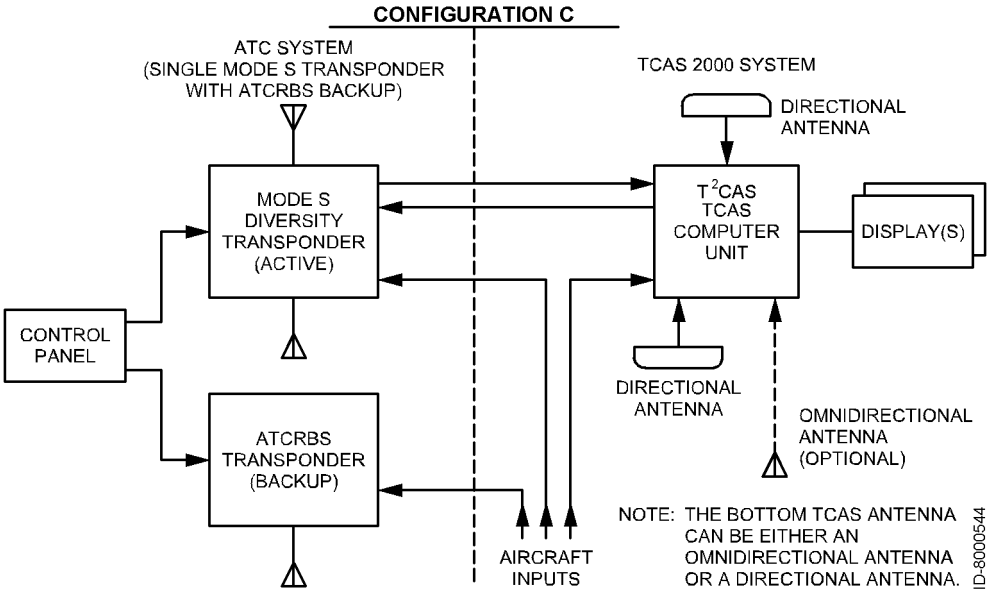

Figure 1-5 (Sheet 2). Typical System Configurations

Use or disclosure of information on this page is subject to the restrictions in the proprietary notice of this document.

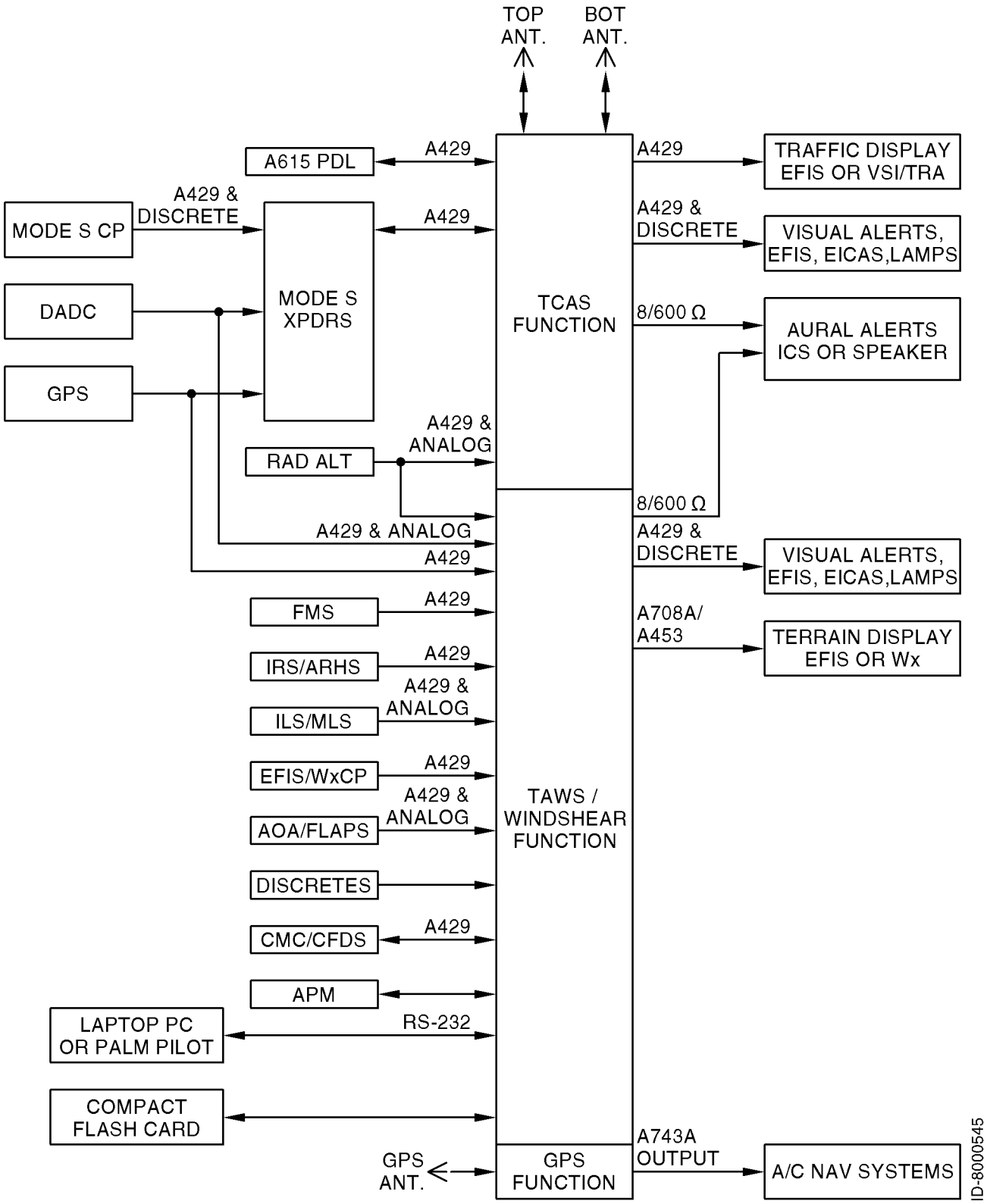

Figure 1-6. T2CAS System Aircraft Interface

Use or disclosure of information on this page is subject to the restrictions in the proprietary notice of this document.

Blank Page

Use or disclosure of information on this page is subject to the restrictions in the proprietary notice of this document.

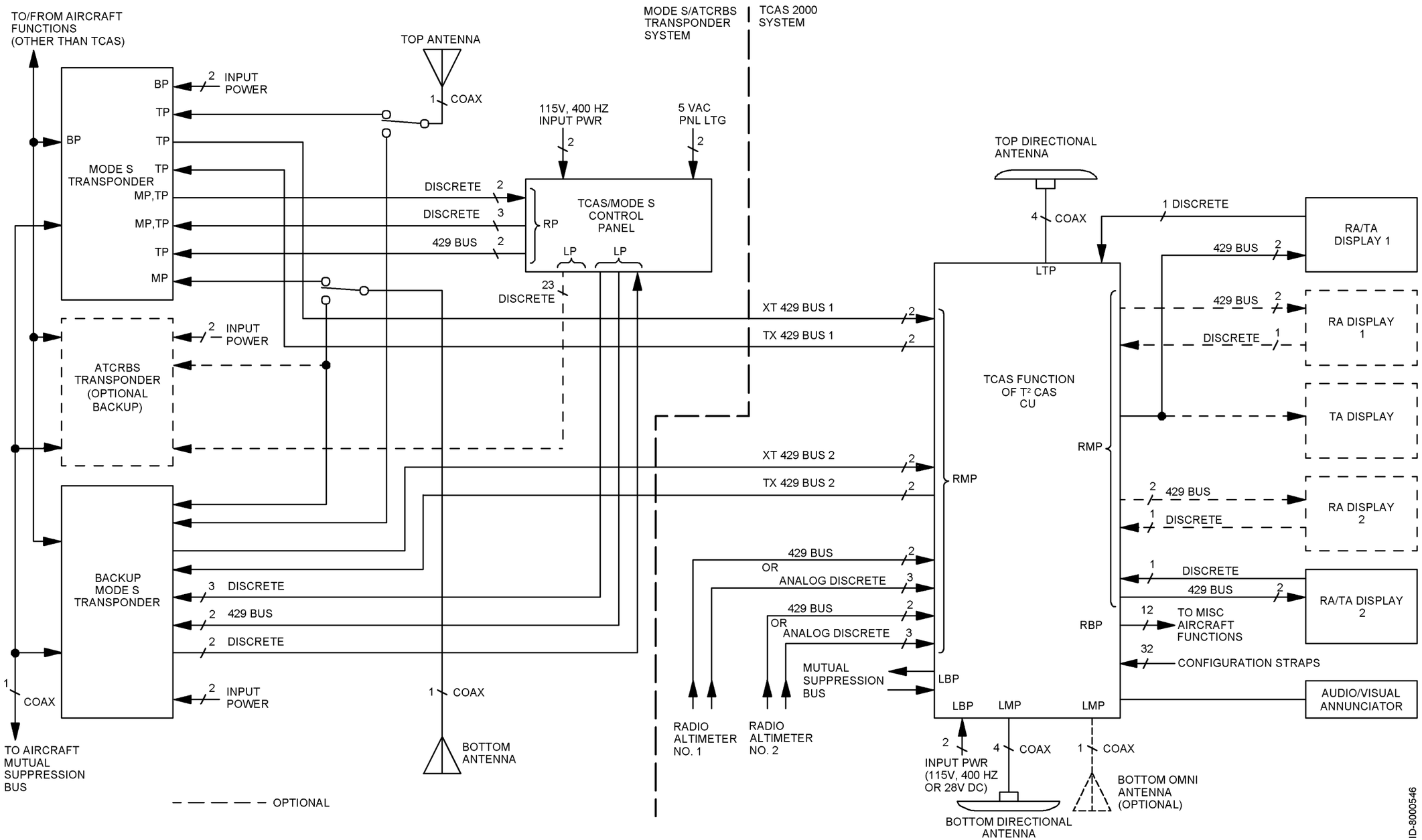

Figure 1-7. TCAS Function System Block Diagram

Use or disclosure of information on this page is subject to the restrictions in the proprietary notice of this document.

4. Component Descriptions

A. TT-950/951/952 T2CAS Computer Unit

The T2CAS Computer Unit (CU) is the heart of the T2CAS system consisting of an existing TCAS 2000 LRU with a TAWS/Reactive Windshear function implemented on a separate circuit card assembly (CCA). The TAWS/RWS function uses a processor and I/O circuitry that is independent from the TCAS function's processor and I/O. As such, the software programs for TCAS and TAWS/RWS are independent from each other. By having independent hardware, I/O and software for TCAS and TAWS/RWS, the possibility of a common mode failure causing the loss of both functions is significantly reduced.

The TCAS function (CCA) contains the RF transmitter and the receivers necessary to interrogate and receive replies from other transponder equipped aircraft. Dual microprocessors are utilized to implement the surveillance and collision avoidance algorithms. The algorithms determine whether an intruder aircraft should be considered a threat and then determine the appropriate vertical response to avoid a midair or near midair collision. In addition, output data is provided to drive displays that inform the flight crew what action to take or avoid.

The TCAS function also provides an interface to the onboard Mode S transponder in order to communicate with other TCAS II equipped aircraft in the airspace.

The TAWS/RWS function (CCA) consists primarily of the Ground Collision Avoidance Module (GCAM). The GCAM contains the core TAWS/Windshear algorithms which utilize A/C state data, performance database variables and Terrain/Airport database information to calculate required TAWS/Windshear alarms, build a terrain display buffer, and then pass the data back to the platform. The resulting terrain information is then output to ARINC 708A compatible weather radar or EFIS displays.

The T2CAS CU also provides past and present LRU and system status through the front panel mounted TEST switch and PASS/FAIL annunciators. Software updates can be incorporated into the computer by an ARINC 603 or 615 data loader port through either the connector mounted on the front panel of the computer or the port provided on the LRU rear connector.

Figure 1-8 shows a graphical view of the TT-950/TT-952 T2CAS Computer Unit and the TT-951 T2CAS Computer Unit. Table 1-6 provides the leading particulars.

Use or disclosure of information on this page is subject to the restrictions in the proprietary notice of this document.

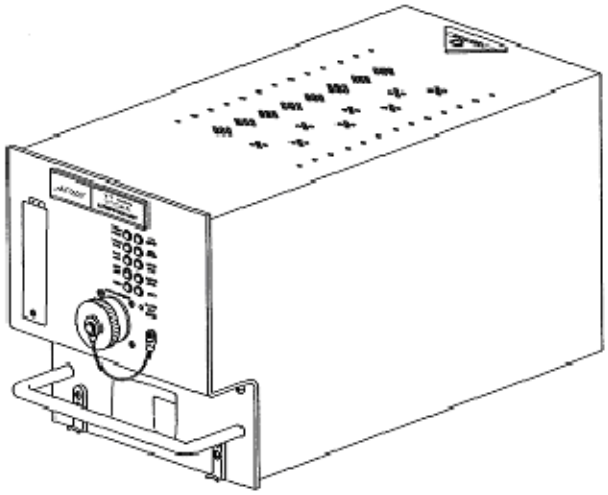

Figure 1-8. TT-950/TT-952 T2CAS Computer Unit (TT-951 Similar)

Use or disclosure of information on this page is subject to the restrictions in the proprietary notice of this document.

Table 1-6. TT-950/951/952 T2CAS Computer Unit Leading Particulars

Item	Specification
Dimensions (maximum):	
• Height	7.64 in. (194.0 mm)
• Width (TT-950/TT-952)	7.52 in. (191.0 mm)
• Width (TT-951)	4.90 in. (124.5 mm)
• Length	15.26 in. (387.6 mm)
Weight (maximum):	
• TT-950	17.60 lb (8.0 kg)
• TT-951	15.40 lb (7.0 kg)
• TT-952	18.60 lb (8.45 kg)
Operating Voltage:	
• dc Voltage	+20.5 V dc minimum, +27.5 V dc nominal, +32.2 V dc maximum
• ac Voltage (TT-950/TT-952 only)	97 V rms minimum, 115 V rms nominal, 134 V rms maximum at 400 ± 80 Hz
Power Consumption (TT-950/TT-951)	70 Watts standby, 100 Watts operational
Power Consumption (TT-952)	83 Watts standby, 113 Watts operational
Circuit Breaker Ratings:	
• 115 V ac Circuit Breaker	5 Amp Typical
• 28 V dc Circuit Breaker	10 Amp Typical
Mating Connector:	
• P1 (Rear Connector)	Radiall Part No. 620-800-066
• J1 (Front Connector)	ACSS Part No. 4004295-160, ITT Part No. KJ6F18A53P
Cooling Requirements:	
• 6 MCU Units (TT-950/952):	
- Cooling Requirements	ARINC 600 (blow through) or ARINC 404 (draw through)
- Minimum Cooling Airflow Rate	54.7 pounds/hour (24.86 Kg/hour)
- Pressure Drop (at min airflow rate)	0.2 ± 0.12 inches (5 ± 3 millimeters) of water
• 4 MCU Units (TT-951):	
- Cooling Requirements	NONE - Unit has an internal fan for cooling. No forced air cooling is required or accepted.
- Fan On (controlled by temperature sensor)	Temp sensor > +45 Deg C

Use or disclosure of information on this page is subject to the restrictions in the proprietary notice of this document.

Table 1-6. TT-950/951/952 T2CAS Computer Unit Leading Particulars (cont)

Item	Specification
- Fan Off (controlled by temperature sensor)	Temp sensor < +25 Deg C
Mounting:	
• TT-950/TT-952	ARINC 600 6-MCU Tray Assembly
• TT-951	ARINC 600 4-MCU Tray Assembly
TSO:	
All Units (TCAS/TAWS)	C119b (with deviation)[2], C151A
All Units (with Reactive Windshear)	C117A
TT-952 (with GPS)	C129A
Software Development Specification	DO-178B, Level B
Environmental Specifications (TT-950/-952)	DO-160D (with deviation)[1] Environmental Category [(A2)(F2)Y]BBB [(HBR)(RB1)(SM)]EXXXXXZ[EBZ]A [EZ]Z[RR]M[A3E3]XXA
Environmental Specifications (TT-951)	DO-160D (with deviation)[1] Environmental Category [(A2)(F2)X]BBB [(HBR)(RB1)(SM)]EXXXXXZ[BZ]AZZ[R R]M[A3E3]XXA
• Temperature / Altitude [A2F2]:	
- Operating Temperature	-55 to +70 degrees C
- Ground Survival Temperature	-55 to +85 degrees C
- Altitude	Sea Level to 55,000 feet
- Loss of Cooling	+40 degrees C for 300 minutes minimum
RF Transmitter Characteristics:	
• Transmitter Frequency	1030 ± 0.01 MHz
• RF Peak Output Power:	
- Minimum	53.3 dBm (210 Watts)
- Nominal	55.3 dBm (335 Watts)
- Maximum	57.3 dBm (540 Watts)
• Unwanted Output Power in an Inactive State	-72 dBm

Use or disclosure of information on this page is subject to the restrictions in the proprietary notice of this document.

Table 1-6. TT-950/951/952 T2CAS Computer Unit Leading Particulars (cont)

Item	Specification
• Pulse Timing Characteristics:	
- Pulse Rise Time	0.05 to 0.10 microseconds
- Pulse Fall Time	0.05 to 0.20 microseconds
- ATCRBS S1, P1, P3, P4 Duration	0.08 ± 0.05 microseconds
- Mode S P1, P2 Duration	0.08 ± 0.05 microseconds
- Mode S P6 Duration	16.25 ± 0.125 microseconds (short) 30.25 ± 0.125 microseconds (long)
• Whisper-Shout Characteristics:	
- Range	0 to 26 dB attenuation by 1 dB steps
- Absolute Tolerance	Relative to the 0 dB step, the attenuation of each step does not exceed the nominal attenuation by more than ±2 dB
- Relative Tolerance	Step increments are ±0.5 dB and monotonic
RF Receiver Characteristics:	
• Receiver Frequency Range	1087 to 1093 MHz
• Receiver MTL Over Frequency (Normal Operation)	-77 ± 2 dBm (≥90% Mode S and ATCRBS replies decoded)
• Receiver Dynamic Range (Normal Operation)	-77 to -23 dBm (≥99% Mode S and ATCRBS replies for signal levels greater than MTL +3 dB)
• Extended Range Reception Capability (Optional Mode)	-82 ± 2 dBm (≥90% Mode S squitter replies decoded)
• Low Level Receiver Signal Rejection (Normal Operation)	-81 dBm (≤10% Mode S and ATCRBS replies decoded)
• Receiver Signal Processing	Amplitude Mono-pulse
• System Bearing Accuracy	Error less than 9 degrees RMS, 27 degrees peak from -10 to +10 degrees elevation

NOTES:

1. The TCAS-II function within the unit meets all DO-160D Environmental Requirements except for RF Radiated Emissions, Category M (DO-160D para. 21.4) in the frequency ranges 100-150MHz and 1215-6000MHz. In these frequency ranges it meets the requirements for RF Radiated Emissions of DO-160C, Category Z. The unit was tested to DO-160D change 1 test procedures.
2. The TCAS-II function within the unit has 2 FAA approved software deviations. The deviations do not affect the installation or performance of the system. The details of the deviations will be furnished by ACSS upon request by the customer.

Use or disclosure of information on this page is subject to the restrictions in the proprietary notice of this document.

(1) System Interfaces

The T2CAS Computer Unit supports the external system interfaces that follow. Unless otherwise specified, the specifications apply to both the TT-950/TT-952 (6-MCU) and TT-951 (4-MCU) computers. All interfaces are per ARINC 735A.

(a) Common System Interfaces

This section defines external system interfaces that are common to both the TCAS function and TAWS/RWS function

1 Radio Altimeter Interface

The T2CAS Computer Unit accepts either analog or digital radio altimeter inputs. For each type of input, dual input ports are provided. The external connector pins for Analog/Digital Radio Altitude Inputs #1 and #2 are shared by TCAS and TAWS/RWS, which both have independent circuitry.

The T2CAS CU analog radio altimeter interface accepts either ARINC 552A, Collins BCA analog input, or metric analog input formats. The T2CAS CU also accepts additional radio altimeter inputs that meet the minimum TAWS input signal requirements. The type of input format is selected by program discrete inputs RMP-12B, -12H, -12J, and -12K. Each analog input contains a valid discrete used to validate the analog input.

Each of the military radio altimeter types provide two outputs that are connected to the T2CAS CU input pins. The two altimeter outputs are the Analog Data Output and Analog Data Reliability signal. The T2CAS CU uses the Data Reliability signal in conjunction with the Analog Data Output to determine radio altimeter failures.

A condition exists for several military radio altimeters known as Out of Track. This condition occurs when the radio altimeter has not failed and the altimeter is not reading a valid altitude. Altitude data for an Out of Track condition should be considered invalid and not used.

The digital radio altimeter interface accepts inputs from an ARINC 707 radio altimeter on ARINC 429 low speed input buses.

Use or disclosure of information on this page is subject to the restrictions in the proprietary notice of this document.

(b) TCAS System Interfaces

1 Mode S Transponder Interface

The T2CAS computer contains two sets of ARINC 429 high speed buses for communication with two Mode S transponders. It uses ARINC 718A/735A communication protocol (2 inputs, 2 outputs).

2 Onboard Maintenance System Interface

The TCAS function contains a set of ARINC 429 low speed buses for communication with an onboard maintenance system (1 input, 1 output). The unit interfaces with all major airframe manufacturers maintenance computer systems. Since the maintenance computer protocol for each airframe manufacturer is different, the TCAS function automatically detects the type of airframe from the data received from the maintenance computer and sets its protocol accordingly.

3 Data Loader Interface

The TCAS function contains a set of ARINC 429 buses and discrete inputs that interface to either an airborne data loader (ADL) through pins on the rear connector, or a portable data loader (PDL) through the 53-pin circular connector on the front panel of the unit. The computer works with ARINC 603 data loader protocol (low speed bus) or ARINC 615 data loader protocol (high speed bus). The ADL and PDL ARINC 429 inputs have separate data loader buses to allow for connection of both types of data loaders. It also has separate data loader enable discrete inputs. The type of data loader protocol (603 or 615) is selected by a discrete input. The unit software part number can be output on the data loader port by grounding a discrete input.

The aural voice commands are contained in Flash Erasable Programmable Read-Only Memory (EPROM) on the TCAS. Each software load contains in addition to program code, voice command data. Changes to voice commands can be made through a software load instead of removal of the LRU from the aircraft for hardware modification.

4 TCAS Display Bus Interface

The TCAS function has four sets of ARINC output buses for display of traffic and resolution advisories.

The TA/RA Display No. 1 and No. 2 buses are high speed ARINC 429 buses that contain both traffic information and resolution advisory information. The buses function according to either the ARINC 735A characteristics, or can optionally be set for the Honeywell EFIS characteristics through a program input pin (RMP-12C). For each bus, a valid discrete input is provided that indicates whether the display is functional.

The RA Display No. 1 and No. 2 buses are low speed ARINC 429 buses that contain only resolution advisory information. The buses function according to the ARINC 735A characteristics. For each bus, a valid discrete is provided that indicates whether the display is functional.

Use or disclosure of information on this page is subject to the restrictions in the proprietary notice of this document.

The RA Display No. 1 and No. 2 buses can be configured for a 429 Data Recorder function by grounding programming pin (RMP-11D). In this mode, the buses are configured for high speed operation.

5 Performance Management Bus Interface

The TCAS function contains a low speed ARINC 429 bus input (RMP-6A, 6B) that is reserved for connection to a performance management system. The input is provisioned to obtain maximum rate of climb information from a FMS or Performance Management System (PMS.) The input is provided for future system enhancements and is currently not used.

6 Magnetic Heading/Attitude Bus Interface

The TCAS function contains a high speed ARINC 429 bus input (RMP-7A, 7B) reserved for connection to an Inertial Reference System (IRS) or Attitude Heading and Reference System (AHRS). The input lets aircraft heading and attitude data be input for the purpose of providing for future horizontal maneuvers. This function has not been implemented on TCAS II installations, so these pins are reserved for future use.

7 RS-422 Data Recorder Interface

The TCAS function contains an RS-422 interface connected to a data recorder. The interface consists of two RS-422 input buses and two RS-422 output buses, with a program input to select internal or external clock operation. The RS-422 input buses input a reply enable signal and an external recorder clock. The RS-422 output buses output the recorder data and internal 125 KHz clock reference. The interface also contains a program pin for enabling or disabling the data recorder function. The RS-422 data recorder inputs and outputs are connected to pins on the front panel 53-pin PDL connector.

8 ARINC 573 Flight Data Recorder Interface

The TCAS function contains 12 discrete outputs connected to an ARINC 573 flight data recorder. The outputs are used to record information during a resolution advisory event.

9 ARINC 429 Flight Data Recorder Interface

The TCAS function contains an interface for an ARINC 429 flight data recorder. The flight data recorder function is activated by grounding a discrete input pin (RMP-11D) on the rear connector. With the discrete input grounded, flight data is output as high speed ARINC 429 data on the RA Display No. 1 and No. 2 Buses. With the discrete grounded, the normal RA Display bus operation is not available.

Use or disclosure of information on this page is subject to the restrictions in the proprietary notice of this document.

10 Voice Audio Outputs

The TCAS function contains two analog audio outputs that provide TCAS aural traffic advisories and resolution advisories. The 8-ohm output has the capability to supply up to 8 Watts RMS into a speaker. The 600-ohm output has the capability to supply up to 80 milliwatts RMS into an audio distribution system.

11 RS-232 Interface

The TCAS function has an RS-232 input/output for connection to a personal computer. The interface allows for LRU maintenance and troubleshooting. The maintenance log and RA event log can also be downloaded to a PC using this port. The RS-232 interface is connected to the 53-pin PDL connector on the front of the unit.

12 Altitude Alerter Interface

The TCAS function contains an ARINC 429 low speed input bus that is reserved for receiving selected altitude information from an altitude control source or flight control computer. The TCAS function uses the selected altitude information to inhibit the weakening of a resolution advisory by determining the selected altitude limits for the aircraft.

13 Reserved ARINC 429 Bus Interface

The TCAS function has four sets of reserved ARINC 429 input buses configured as either high speed or low speed. These buses allow for future upgrades to the TCAS system without hardware modification.

(c) TAWS/RWS System Interfaces

1 Onboard Maintenance System Interface

The TAWS/RWS function contains a set ASDB defined ARINC 429 low speed buses for communication with an onboard maintenance system (1 input, 1 output). The unit interfaces with all major airframe manufacturers maintenance computer systems. Since the maintenance computer protocol for each airframe manufacturer is different, the T2CAS computer uses information from the Aircraft Personality Module (APM) to determine what OMS system, if any, is installed.

2 Data Loader Interface

The TAWS/RWS function is provisioned for interface with an ARINC 615A data loader (Ethernet 10 Base-T). The front Portable Data Loader connector contains the signals required by the ARINC 615A specification. The interface will be used to upload future software updates to the TAWS/RWS system.

Use or disclosure of information on this page is subject to the restrictions in the proprietary notice of this document.

The T2CAS also contains an access port on the front of the unit that accepts a Type I Compact PC Flash card. The Compact PC card is commercially available and can hold up to 300 Megabytes of memory. The Compact PC card is electrically compatible with PCMCIA Flash cards and can be inserted in a PCMCIA card slot on a PC using an adapter, or a USB serial port with an adapter. The Compact PC Flash card is used for updating the TAWS/RWS operational software and terrain database. In addition, the Compact PC Flash card may be used as a data recorder for the purpose of certification flight tests. T2CAS is designed so the Compact PC card may remain inserted in the unit during flight tests.

3 TAWS Display interface

The TAWS function contains two Digital 453 picture bus outputs that transmit terrain display data to ARINC 708A compatible weather radar displays or EFIS displays. The bus outputs can be configured with independent range selections. The Mode and Range selections are input to the system on an ARINC 429 bus.

The TAWS function also has two ARINC 429 bus outputs that contain data for alerts and annunciation of system status.

4 RS-232/ Compact Flash Card Data Recorder Interface

The Data Recorder Interface can utilized for either internal or external Data recording.

The TAWS/RWS Event log contains event information due to TAWS or Windshear cautions or warnings (internal Data recording). The log can hold approximately three events that last up to 45 seconds each (assuming GCAM Event, GCAM Parameter data and GFM parameter data selected for recording). The event log data may be downloaded to a Laptop PC over the RS-232 port, or downloaded to a Compact Flash card using the slot on the front of the unit.

The external Data recording provides the capability to perform real-time recording of various T2CAS input, output and internal data. This data may be recorded using the Compact Flash Card or RS-232 interface. Using a 300Mbyte Compact Flash card, the system can store up to 15 hours of flight test data.

In addition, the RS-232 interface allows for LRU maintenance and troubleshooting. The maintenance log and RA event log can also be downloaded to a PC using this port. The RS-232 interface is connected to the 53-pin PDL connector on the front of the unit.

Use or disclosure of information on this page is subject to the restrictions in the proprietary notice of this document.

5 Flight Data Recording

There is currently no output to the Flight Data Recorder.

6 Voice Audio Outputs

The TAWS/RWS function contains two analog audio outputs that provide TAWS/RWS aural terrain avoidance advisories and windshear advisories. The 8-Ohm output has the capability to supply up to 8 Watts RMS into a speaker. The 600-Ohm output has the capability to supply up to 80 milliwatts RMS into an audio distribution system.

7 Air Data Interface

The TAWS/RWS function uses Vertical Speed, Static Air Temperature, Computed Air Speed, Corrected/Uncorrected Barometric Altitude from an air data system. In addition, TAWS/RWS uses True Airspeed (TAS) on installations where T2CAS is performing the RWS function.

The TAWS/RWS function accepts up to two Digital ARINC 429 inputs from Digital Air Data Systems. Some of the supported system interfaces include ARINC 706 Air Data Computer (ADC), ARINC 575 ADC, ARINC 738 Air Data Inertial Reference System (ADIRS), and other non-ARINC standard interfaces that meet the minimum input signal requirements for TAWS/RWS.

TAWS/RWS can accept analog air data inputs from an ARINC 565 or ARINC 575 Air Data System and other non-ARINC standard interfaces. Analog system inputs can be in the form of 2-wire DC absolute, 2-wire DC ratio-metric, 2-Wire AC ratio-metric, 3-Wire AC Synchro, 3-Wire AC Sine/Cosine.

8 Inertial Reference Interface

TAWS/RWS function uses Ground Speed, True Track Angle, Flight Path Angle, Latitude, Longitude, Altitude MSL, Roll Angle, Pitch Angle, Inertial Vertical Speed, and True Heading from an inertial system.

Additionally, TAWS/RWS uses Body Longitudinal and Normal Acceleration on installations where TAWS/RWS is performing the RWS function.

TAWS/RWS accepts up to two Digital ARINC 429 inputs from an ARINC 704 Inertial Reference System (IRS), ARINC 705 Attitude Heading and Reference System (AHRS), ARINC 738 Air Data Inertial Reference System (ADIRS), Global Positioning and Inertial Reference System (GPIRS) and other non-ARINC standard interfaces that meet the minimum input signal requirements for TAWS/RWS.

TAWS/RWS can accept analog inputs for Body Longitudinal and Normal Acceleration, Pitch and Roll, Magnetic Track, Variation and Heading. The analog input sources can be 2-Wire DC Absolute and 3-Wire AC Synchro.

Use or disclosure of information on this page is subject to the restrictions in the proprietary notice of this document.

9 FMC Interface

The TAWS/RWS function uses Ground Speed, True Track Angle, Flight Path Angle, Aircraft Weight, Latitude, Longitude and True Heading from an FMC system.

TAWS/RWS can accept up to two Digital ARINC 429 inputs from an ARINC 702 Flight Management Computer system or other non-ARINC standard interfaces.

10 GPS/GNSS

The TAWS/RWS function uses Vertical Speed, Ground Speed, True Track Angle, Latitude, Longitude, Altitude MSL, WGS 84 altitude and True Heading from a GPS System.

NOTE: World Geodetic System (WGS) 84 altitude is another type of MSL altitude.

TAWS/RWS accepts up to two Digital ARINC 429 inputs from an ARINC 743 or ARINC 743A GPS System, or other non-standard ARINC interfaces that meet the minimum input signal requirements for TAWS/RWS

11 ILS/MLS

The TAWS/RWS function uses Selected Runway Heading, Glide Slope Deviation, Localizer Deviation, and ILS Select from an Instrument Landing System (ILS) or Microwave Landing System (MLS).

TAWS/RWS can accept up to three Digital ARINC 429 inputs from an ARINC 710 ILS receiver, ARINC 727 MLS receiver, or other non-ARINC standard interfaces.

TAWS/RWS can accept up to two Analog Glide Slope and two Analog Localizer inputs from an ARINC 547 or ARINC 578 ILS receiver as a 2-Wire DC absolute input.

12 Angle Of Attack

On installations where T2CAS is performing the RWS function, the TAWS/RWS function uses the aircraft angle of attack for the Windshear computation.

TAWS/RWS can accept up to two ARINC 429 inputs from a source such as a Digital Stall Warning Computer (DSWC) or other data concentrator devices.

TAWS/RWS can accept analog angle of attack information in the form of 3-Wire AC Synchros, 2-Wire DC absolute and 2-Wire DC ratio-metric inputs.

Use or disclosure of information on this page is subject to the restrictions in the proprietary notice of this document.

13 Decision Height

The TAWS/RWS function uses selected Decision Height and/or Minimum Descent Altitude for the generation of audio call-outs. TAWS/RWS can accept ARINC 429 inputs or a discrete input.

14 Decision Height/Minimum Descent Altitude Switch

A Flight Deck switch can be used to select either Decision Height or Minimum Descent Altitude for audio call-out altitude determination.

15 Flap/Slat Settings

TAWS/RWS function uses Flap/Slat settings for TAWS and Windshear alerts.

TAWS/RWS can accept ARINC 429 Flap/Slat Setting inputs from a source such as a Digital Stall Warning Computer (DSWC) or other data concentrator devices. TAWS/RWS also accepts Analog inputs in the form of 3-Wire AC Synchros, DC absolute, DC ratio-metric and Discrete Inputs.

16 Weight and Balance System (WBS)

The TAWS/RWS function obtains Current Aircraft Weight from an A429 Digital Weight and Balance System source.

(2) Discrete Inputs

The T2CAS has various discrete inputs available for implementing various TCAS and TAWS/RWS functions. For the TCAS function, the input logic status is defined in accordance with ARINC 735A. For the TWAS/RWS function, the input definition is defined by the ASDB for the specific aircraft type.

(3) Program Inputs

The T2CAS has various program inputs available for TCAS unit configuration and installation programming. Input logic status is defined according to ARINC 735A definition.

The T2CAS utilizes the ASDB database for TAWS/RWS unit configuration and installation programming.

The ASDB defines the assignment of the connector pins to each signal, the criteria for determining the value and status of each signal and the signal specific filtering and processing requirements.

(4) Discrete Outputs

The T2CAS TAWS function contains 13 discrete outputs that are used to provide annunciation of alerts and system status. For the TCAS function, the output logic status is defined in accordance with ARINC 735A. For the TAWS/RWS function, the output definition is defined by the ASDB for the specific aircraft type.

Use or disclosure of information on this page is subject to the restrictions in the proprietary notice of this document.

(5) Self-Test Function

(a) TCAS and TAWS/RWS Maintenance Self-Test

By momentarily pushing the TEST switch on the front panel of the T2CAS Computer Unit, maintenance personnel can display fault data for the current and preceding flight legs. When TEST is initially activated, all annunciators (pass/fail lamps on front of unit) are ON for a 3-second lamp test, then current fault data is displayed for 10 seconds. If no further activations of the TEST switch are made, the LRU display cycle is terminated at the end of the 10-second fault display period, and all annunciators are extinguished.

If during the 10-second fault display period, the TEST button is activated again, the fault display period is aborted, a 2-second lamp test cycle is done, and the fault data recorded for the preceding flight leg is displayed for 10 seconds. This procedure can be repeated up to 10 times to obtain recorded data from the previous 10 flight legs. If the TEST button is not activated again during the fault display period, the fault display cycle is terminated at the end of the 10-second fault display period and all annunciators are extinguished. If an attempt is made to display fault data for the preceding flight leg when the tenth preceding flight leg fault data is displayed, all annunciators flash for a 3-second period at a 2.5-Hz rate, after which all annunciators are extinguished.

When less than 10 flight legs have been flown since the T2CAS Computer Unit was shop tested and recertified, less than 10 previous flight legs of recorded fault data may be available for display. In this case, if an attempt is made to display fault data for the preceding flight leg when the earliest flight leg is displayed, all annunciators flash for 3 seconds at a 2.5-Hz rate and then all annunciators are extinguished.

The TCAS PASS, TCAS FAIL, and TAWS Pass/Fail status annunciators indicate the status of the T2CAS Computer Unit only. All other annunciators reflect the condition of the respective sub-system.

(b) TCAS Self-Test

The T2CAS TCAS self-test is initiated from a self-test button on the TCAS/MODE S control panel. The T2CAS TCAS self-test may also be initiated from the Central Maintenance Computer.

(c) TAWS/RWS/GPS Self-test

The T2CAS TAWS/RWS/GPS self-test is initiated from a self-test discrete input interface. The TAWS/RWS/GPS self-test discrete is further defined in the ASDB.

The T2CAS TAWS/RWS/GPS self-test may also be initiated from the Central Maintenance Computer.

Use or disclosure of information on this page is subject to the restrictions in the proprietary notice of this document.

B. Airplane Personality Module Interface

The Airplane Personality Module (APM) is defined in ARINC Report 607, Attachment 3 – see Figure 1-9. A serial digital interface between the T2CAS Computer and the APM allows the APM to be programmed with aircraft and system configurations during the initial installation of the T2CAS computer. In addition, the serial digital interface allows the APM to be read during every subsequent power-on to configure the computer for proper operation. The APM is used to hold/provide information for the T2CAS configuration database, for example, registration number, aircraft type, equipment installed, et cetera. Moreover, the APM contains the Aircraft Specific Database which defines the Input/Output definition for the specific aircraft type, the aircraft climb performance data to support of the TAWS functionality and the windshear algorithm coefficient data.

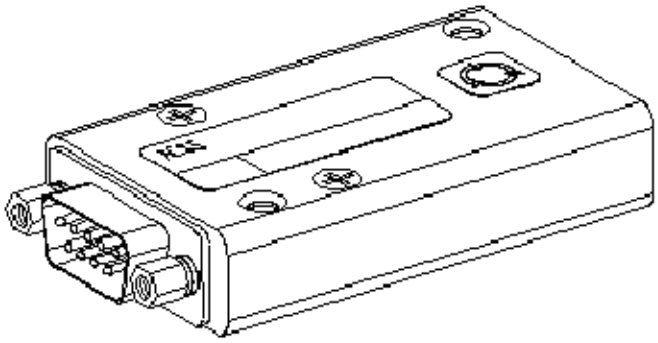

Figure 1-9. T2CAS Airplane Personality Module (APM)

C. Directional Antenna

The T2CAS TCAS directional antenna, Figure 1-10, is a four-element, vertically polarized, monopole array capable of transmitting in four selectable directions at 1030 MHz. The antenna is capable of receiving replies from all directions simultaneously with bearing information at 1090 MHz, using amplitude-ratio monopulse techniques.

The antenna consists of a molded radome with radiating/receiving elements and is completely filled with a rigid foam. The antenna assembly uses five or nine screws to attach the radome and either four or eight screws to attach the antenna to the aircraft fuselage.

Use or disclosure of information on this page is subject to the restrictions in the proprietary notice of this document.

The ACSS directional antenna has a small frontal area. The circular radome has a 3:1 elliptical leading edge and an extremely low profile height of only 0.806 inch. This yields excellent aerodynamic performance with a minimum possibility of icing, which could be a hazard for rear mounted engines.

For T2CAS TCAS system installations, the top antenna must be a directional antenna. The bottom antenna can be either a directional or omnidirectional antenna. The T2CAS Computer Unit has the capability of automatically sensing which version is installed.

The directional antenna mounting screws are standard #10-32 UNF-2A pan head, corrosion-resistant (stainless) steel screws in accordance with Military Specification MS51958. The appropriate length is determined by the installer allowing 0.5-inch for the thickness of the antenna and adapter plate. A washer must be installed under the head of each mounting screw. The washer must be made of passivated, corrosion-resistant steel in accordance with MIL-S-5059 or MIL-S-6721. The Air Force-Navy Aeronautical Standard part number is AN960C10L. The washer has an outer diameter of 0.438 inch, an inner diameter of 0.203 inch, and a thickness of 0.032 inch.

An O-ring (included with the directional antenna) is required to be installed between the directional antenna and the aircraft fuselage. The National Aerospace Standard part number for the O-ring is NAS 1611-240. The ACSS part number for the O-ring is 4000171-240.

NOTE: For directional antennas, ACSS Part No. 7514060-90X, the customer must provide an adapter plate for mounting to the aircraft. For details of the antenna base plate, to which the adapter must mate, refer to Section 2. Directional antennas, ACSS Part No. 7514081-9XX, come with a preinstalled adapter plate.

The average unit weight of an antenna with adapter plate is approximately 3.0 pounds.

Use or disclosure of information on this page is subject to the restrictions in the proprietary notice of this document.

TABLE 1	
REF DES	SLEEVING COLOR
J1	YELLOW
J2	BLACK
J3	BLUE
J4	RED

TABLE 2	
DIM "B" (REF)	ANTENNA/ADAPTER ASSY PART NO.
1.560 MAX	7514081-901 THRU -909, -911, -912 AND -917
.705 MAX	7514081-910, -913, -914, -915 AND -916

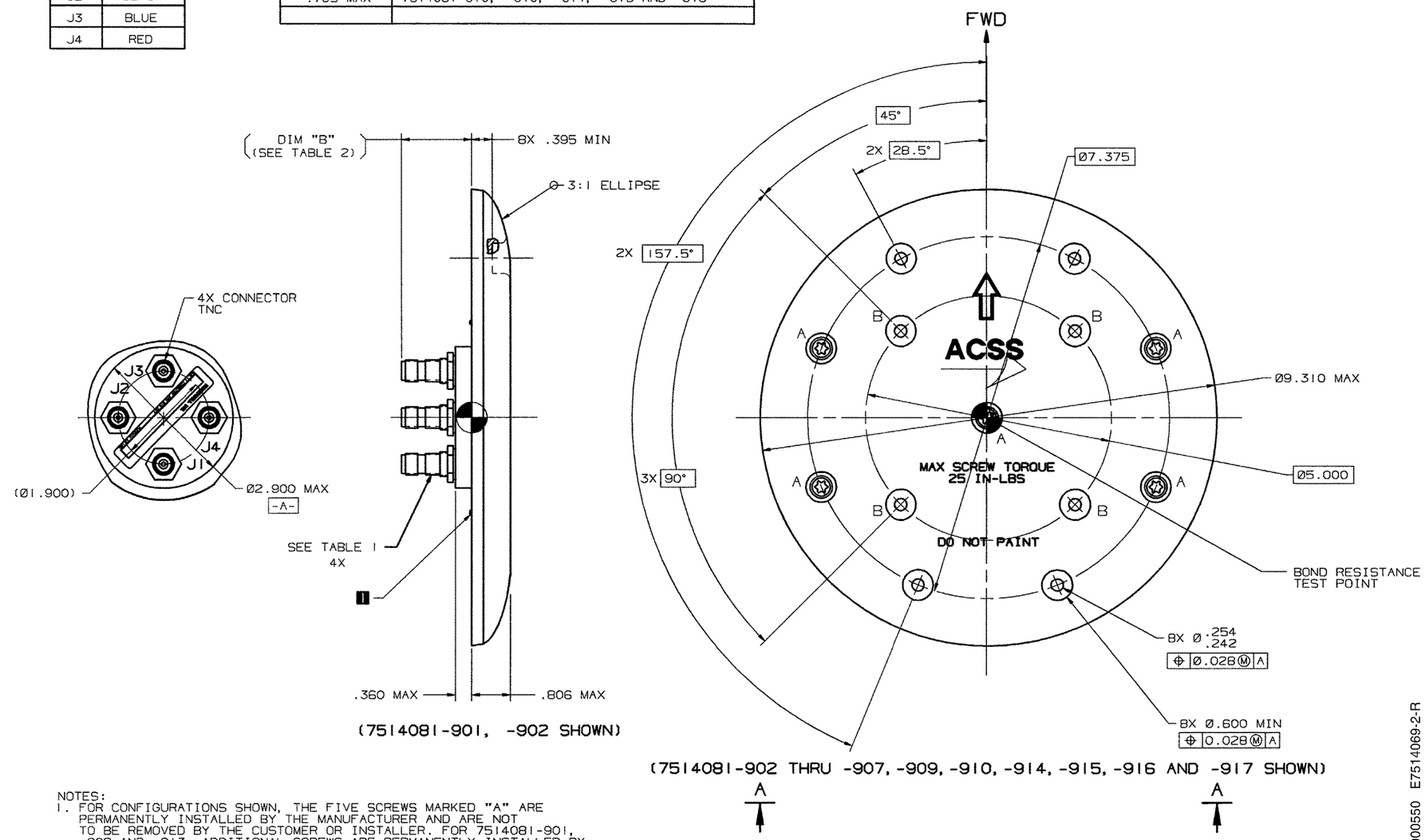

NOTES:
1. FOR CONFIGURATIONS SHOWN, THE FIVE SCREWS MARKED "A" ARE PERMANENTLY INSTALLED BY THE MANUFACTURER AND ARE NOT TO BE REMOVED BY THE CUSTOMER OR INSTALLER. FOR 7514081-901, -908 AND -913, ADDITIONAL SCREWS ARE PERMANENTLY INSTALLED BY THE MANUFACTURER IN LOCATIONS MARKED "B" AND ARE NOT TO BE REMOVED BY THE CUSTOMER OR INSTALLER.

Figure 1-10. Directional Antenna

Use or disclosure of information on this page is subject to the restrictions in the proprietary notice of this document.

D. GPS Antenna and Coax

For T2CAS installations that include the optional internal GPS module, a compatible ARINC 743A active GPS antenna and coax interface shall be included in the T2CAS installation design.

The antenna used for the GNSSA Receiver Module is required to meet the requirements of RTCA/DO-228, Change 1, and TSO-C144. A potentially suitable antenna is listed below, although antennas are available from different vendors:

- Manufacture: AeroAntenna
- Part Number: AT575-143WAC-TNCF-000-26-NM
- Description: 26 dB gain, 12 volt, Active Antenna

The range of antenna gains which are acceptable is dependent on the coax length and resulting dBs of loss. Generally, an antenna gain of 20 - 30 dB is desired. Higher gain antennas introduce the amplification of noise as well as the desired signal. This can saturate the GPS input circuitry, reducing its effectiveness. If the antenna gain is low and the resulting limit of allowable cable loss is exceeded, excessive signal degradation will occur and the GNSSA Receiver Module may not be able to meet its performance specifications.

Do-228 Change 1 compliant antennas are required. Change 1 introduced rejection at 5 to 10 dB higher that the original DO-228 requirements at the SATCOM frequency. Therefore system performance under interference can not be assured with the non-Change 1 compliant antennas. When subjected to DO229 normal interference levels, system performance can be degraded.

Figure 1-11 shows a typical T2CAS GPS antenna coax sub kit with the sub kit parts listed in Table 1-7. Figure 2-4 shows AeroAntenna's AT575-143 active GPS antenna series outline drawing.

The GPS coax installation should include one disconnect near the T2CAS computer tray to facilitate the removal of the equipment shelf from the aircraft. The T2CAS computer provides +12 Vdc to the active GPS antenna through the coax's center conductor.

Use or disclosure of information on this page is subject to the restrictions in the proprietary notice of this document.

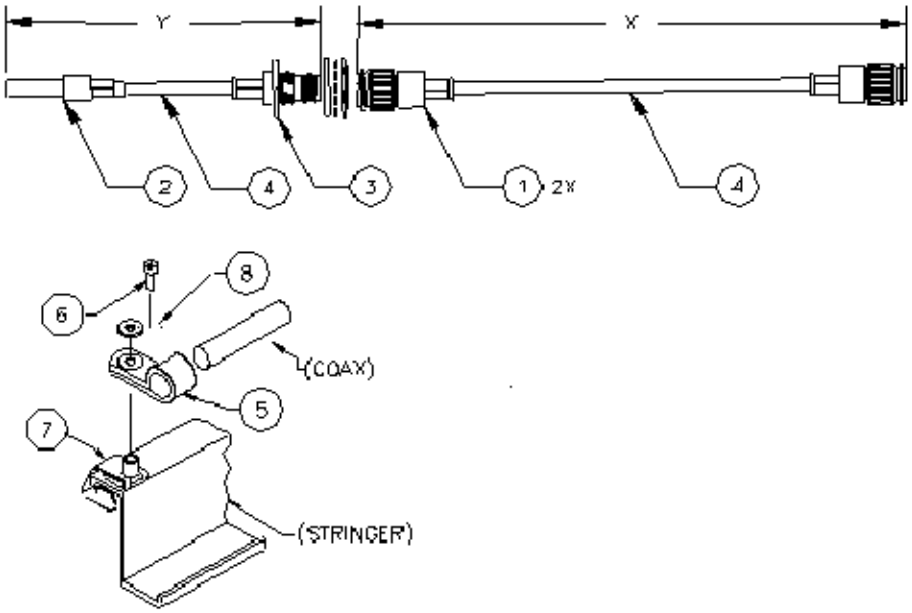

Figure 1-11. Typical T2CAS GPS Antenna Coax Sub Kit

Table 1-7. GPS Antenna Coax Kit Parts List

Item Number	Nomenclature or Description	Part Number	Number Required
1	TNC STRAIGHT PLUG	See Note	2
2	ARINC SIZE 5 CONTACT	See Note	1
3	TNC BULKHEAD JACK	See Note	1
4	GPS COAX	See Note	See Note
5	CLAMP	MS25281-R4	See Note
6	SCREW, HEX-HD, 10-32 X .38	NAS1801-3-6	See Note
7	STAND-OFF CLIP	294243-12C	See Note
8	WASHER #10 X .032 THK, ALUM	NAS1149D0332J	See Note
NOTE: The part numbers and/or quantity of listed parts are dependent on the installation design.			

Use or disclosure of information on this page is subject to the restrictions in the proprietary notice of this document.

E. Gables ATC/TCAS Dual Mode S Transponder Control Panel

The Gables ATC/TCAS Mode S control panel is used to independently control two Mode S transponders, and to interface with a Mode S installation with TCAS capabilities.

The control panel contains two isolated electronic modules each dedicated to a given transponder. Each module derives its input ATC code data from two dual concentric knobs. The selected code is then displayed on a four digit Liquid Crystal Display (LCD), and subsequently transmitted to each transponder.

Figure 1-12 shows a typical front panel layout of a Gables G7130 series control panel. Table 1-8 gives items and specifications that are particular to these units.

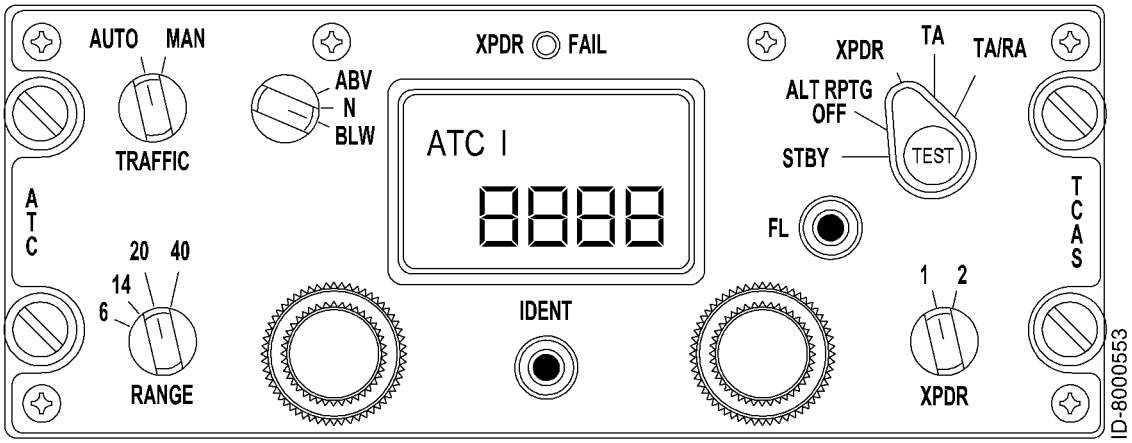

Figure 1-12. Typical Gables ATC/TCAS Control Panel

Use or disclosure of information on this page is subject to the restrictions in the proprietary notice of this document.

Table 1-8. Gables G7130 Series Control Panel Leading Particulars

Item	Specification
Dimensions (maximum):	
• Height	2.25 in. (57.2 mm)
• Width	5.75 in. (146.1 mm)
• Length	5.80 in. (147.3 mm)
Weight (maximum)	2.0 lb (0.907 kg)
Power Requirements:	
• Primary	+28 V dc, 0.25 Amps maximum current
• Display and Overlay Lighting	5 V, 400 Hz, 2.3 Amps maximum
Display Type	Four Digit, Dichroic LCD
Code Select Range	0000 to 7777 (octal)
Transmitted ARINC 429 Labels	013, 015, 016, 031 (octal)
TSO	C112/C119
Environmental Specifications	/A2D1/BB/MB·/XXXXXXZZAZZRZ/xxZZ
Mating Connectors:	
• J1	M83723/75R16247 or MS24266R16B24S7
• J2	M83723/75R16248 or MS24266R16B24S8
Mounting	Four Unit Dzus Fasteners

(1) Functional Description and Operation

Communication with Mode S transponders is accomplished through an ARINC 429 bus as defined in ARINC Characteristic 718. Control panel functions include 4096 ident code selection and display, altitude source and reporting inhibit selection, selection between two onboard transponders, TCAS TA or TA/RA advisory selection, range selection (in nautical miles) and a system functional test selection. A description of the front panel annunciator and switch functions follows:

(a) Transponder Code Display

The control panel has a single four digit LCD display common to both modules within the unit. The display shows the ATC code selected by the user and consequently transmitted to the transponders. Input to the display is controlled by the system select switch (XPDR 1-2).

In addition, certain fault indications are also indicated on the display. After a functional test has been initiated, PASS shows on the display after a successful test, or it shows FAIL if a high level failure is detected under normal operating conditions. It also shows which transponder is active by displaying ATC 1 or 2.

Use or disclosure of information on this page is subject to the restrictions in the proprietary notice of this document.

(b) ATC Code Selection

The ATC four digit code is selected with two dual concentric sets of knobs. Each knob is dedicated to a single liquid crystal display (LCD) digit on the LCD code display. The two smaller knobs control the inner digits of the LCD (tens and hundreds) while the two larger knobs control the outer most digits (units and thousands).

(c) XPDR 1-2 Switch

The XPDR switch is a two position switch that allows the selection of one Mode-S module in the control panel, and the activation of its associated transponder (System 1 or System 2).

(d) Mode Control Selector Switch

The rotary switch labeled STBY-ALT RPTG OFF-XPDR-TA ONLY-TA/RA allows the operator to activate the TCAS system by selecting TA, or traffic and resolution advisory (TA/RA). When STBY is selected, both transponders are selected inactive or in standby mode. Altitude reporting off (ALT RPTG OFF) selection disables the altitude data sources interrupting transmission of aircraft altitude and location information to ground controllers.

(e) ABV/N/BLW Switch

The ABV/N/BLW switch selects an altitude range (from aircraft) for traffic display on the TCAS displays. Range limits for software versions prior to Change 7 are 7000 feet above and 2700 feet below the aircraft when in ABV mode and 2700 feet above and 7000 below the aircraft when in BLW mode. Range limits for the Change 7 software version are 9900 feet above and 2700 feet below the aircraft when in ABV mode and 2700 feet above and 9900 below the aircraft when in BLW mode. When the normal (N) position is selected, the display range is 2700 feet above and below the aircraft.

(f) Traffic Display Switch

The TRAFFIC AUTO-MAN switch is a two position rotary switch that controls the TCAS traffic display mode of operation. When the AUTO mode is selected, the TCAS computer sets the TCAS displays to pop-up mode under a traffic/resolution advisory condition. If the MAN mode is selected, then the TCAS displays will be constantly activated advising of any near by traffic detected within the horizontal and vertical range limits.

(g) Range Switch

The RANGE switch is a four or six position rotary switch used to select among different nautical mile (NM) traffic advisory horizontal range displays.

Use or disclosure of information on this page is subject to the restrictions in the proprietary notice of this document.

(h) IDENT Key

The IDENT key is a momentary button. When pushed, the IDENT key causes an ATCRBS reply or Mode S UF-4 and UF-5 replies to contain a special pulse identifier pulse (SPI) as an identifier to be transmitted to ground controllers in accordance with ARINC 718 Draft 5 of Supplement 4.

(i) Flight Level Button

The FL button is a momentary button used to select between relative and absolute altitude information. When absolute is selected, this mode is enabled for approximately 20 seconds and then reverts back to relative.

(j) Test Button

The TEST button enables the user to initiate a system functional test. When the TEST button is pushed, the control panel initiates an internal test while a functional test output is also transmitted through ARINC 429 labels.

When installed with a TCAS system, an extended test can be initiated by continuously pushing the TEST button for at least eight seconds.

(k) XPDR FAIL Annunciator

The XPDR FAIL annunciator displays the functional status of the active transponder. The fail annunciator lights only when a failed transponder is selected on the XPDR 1-2 switch.

F. TAWS Control Panel

The TAWS controls are used to control the displayed terrain data and TAWS inhibit features. The TAWS control panels may be installed in a single or dual configuration depending on the TAWS display capabilities.

The TAWS controls can be mounted on a single control panel or they can be discrete switches individually mounted at a convenient location in the Flight Deck. The TAWS controls may be part of the electronic display menu selection in installations where TAWS information is displayed on an EFIS or electronic display.

G. VSI/TRA Display

The VSI/TRA display, Figure 1-13, is used to display current vertical speed and TCAS traffic/warning information. The display consists of a full color, active matrix, liquid crystal display panel. The display quality compares favorably to CRT displays but requires less power, weight, and volume than a CRT with a similar display area. Table 1-9 gives items and specifications particular to the unit. Figure 1-14 contains an interface block diagram of the 41-pin VSI/TRA.

Use or disclosure of information on this page is subject to the restrictions in the proprietary notice of this document.

TYPICAL TEST DISPLAY

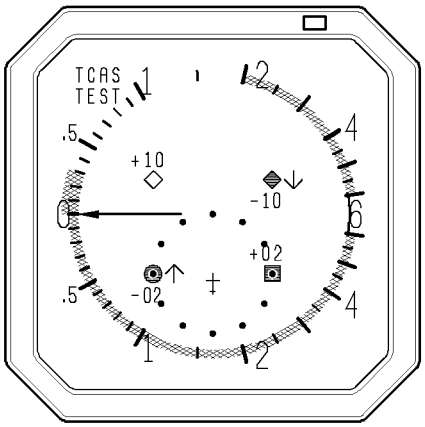

FAILURE ANNUNCIATIONS

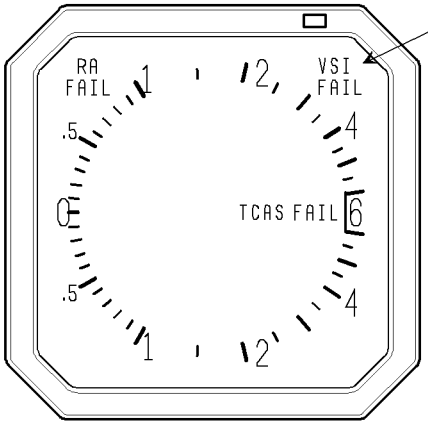

MODE/TEST ANNUNCIATION

EXTENDED TEST MODE DISPLAY

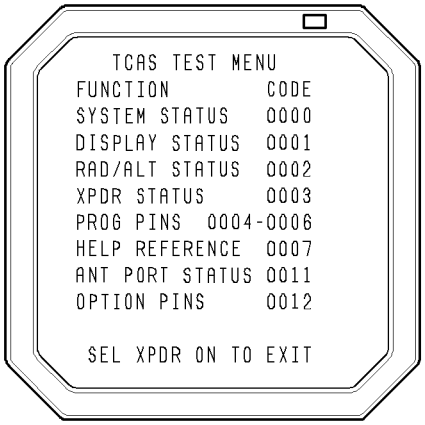

ID-8000554

Figure 1-13. Typical VSI/TRA Display Formats

Use or disclosure of information on this page is subject to the restrictions in the proprietary notice of this document.

Table 1-9. VSI/TRA Leading Particulars

Item	Specification
Dimensions (maximum):	
• Height	3.26 in. (82.8 mm)
• Width	3.26 in. (82.8 mm)
• Length	7.5 in. (190.0 mm)
Weight (maximum)	3.3 lb (1.5 kg)
Power Requirements:	
• Primary	115 V, 400 Hz; 17 Watts nominal (Day), 12 Watts nominal (Night), 20 Watts maximum
• External Circuit Breaker Rating	1 Amp at 115 V ac
Display Type	Liquid Crystal
Mating Connectors:	
• J1 (41 Pin)	M83723/72R-20-41-6
Mounting	3-ATI Clamp, Marmon NH1004994-30 or MSP 64311B

(1) Functional Description and Operation

The VSI/TRA has three functions. It continuously displays rate of climb or rate of descent. Traffic information is displayed and resolution advisory information is displayed against vertical speed to allow the flight crew to avoid threats.

The vertical speed display is generated from signals applied directly to the indicator. The VSI/TRA is designed to be used in place of a conventional vertical speed indicator. Four possible sources exist for vertical speed data including ARINC 429 data, DC analog signals in accordance with ARINC 575 (approximately 500 mV per 1000 ft/min), ac analog signals in accordance with ARINC 565 (approximately 250 mV per 1000 ft/min), and ARINC 429 signals from the ACSS Pressure Transducer Module. The VSI/TRA computes vertical rate from electrical static pressure when a remote static sensor is used. These four program pin selectable configurations provide compatibility with most aircraft.

Various dash number VSI/TRA Displays are available that provide unique design characteristics, which include VSI rate filter programming and selection of an English or metric rate scale. Table 1-5 contains a listing of all the VSI/TRA configurations.

Use or disclosure of information on this page is subject to the restrictions in the proprietary notice of this document.

The VSI/TRA also displays symbology corresponding to traffic in the vicinity of the aircraft. Threat information is received from the TCAS function on a dedicated high-speed ARINC 429 bus. The display uses the bearing, altitude, and range data for each threat to provide an indication of the proximity of the threat. Allowable (nonilluminated or green illuminated bands) and prohibited (red illuminated bands) vertical rates are displayed based on information received from the TCAS function. The VSI/TRA can be pin programmed to provide vertical speed data only, vertical speed and resolution advisory data, or vertical speed, resolution advisory and traffic advisory data. Display of the TCAS system fault status is provided on the VSI/TRA in response to extended TCAS control panel TEST activation.

Display dimming is controlled from several inputs consisting of an internal light sensor mounted on the bezel of the LRU, a remote light sensor, and the aircraft dimming bus. The display is dimmed by varying the brightness of the LCD panel backlighting.

(2) Software Considerations

VSI/TRA software is developed to a DO-178A category of Level ll (essential). The software continually monitors and displays vertical speed and TCAS information. Output discretes supply user components with the status of the LRU. TCAS valid indicates that the LRU is displaying valid TCAS information.

(3) Built-In-Test Equipment (BITE) and Self-Test Capability

The LRU has input discretes that allow a calibration and test program to be run. This mode allows the display to be adjusted and various diagnostic tests to be performed. These tests and adjustments can only be done in a shop on a dedicated test fixture.

When the LRU application program is operating in the aircraft, the background loop continuously monitors the power supply status, the ROM integrity, and the analog range limits. A failure results in the setting of bad status output discretes. A cold start will continuously be attempted until the LRU passes the built-in-test. There is a dedicated self-test input for both versions of the VSI/TRA Display. When this pin is activated, the unit will display symbology that aids in the detection of unit faults.

Use or disclosure of information on this page is subject to the restrictions in the proprietary notice of this document.

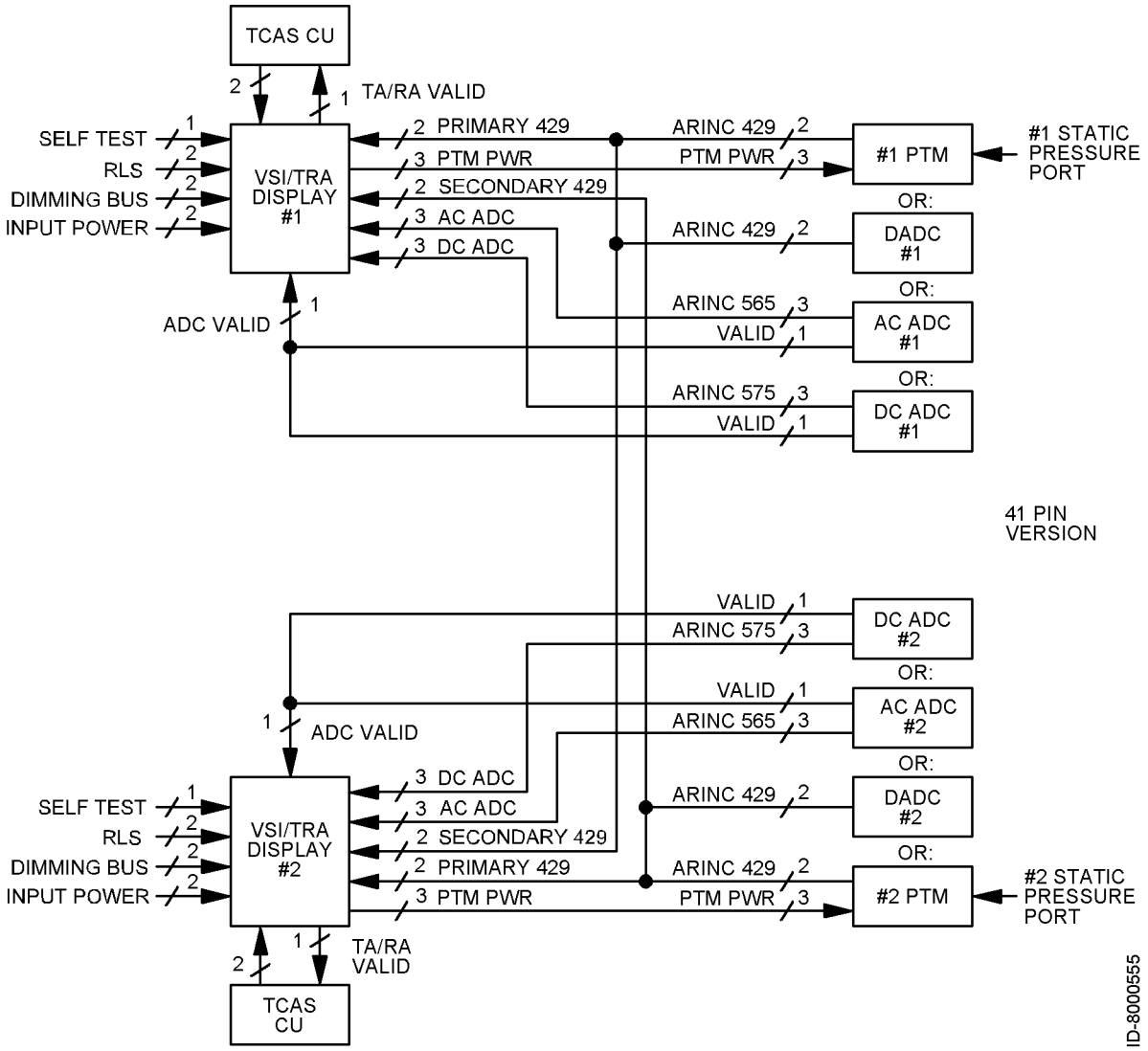

Figure 1-14. VSI/TRA Interface Diagram (41-Pin)

Use or disclosure of information on this page is subject to the restrictions in the proprietary notice of this document.

H. TAWS Terrain Hazard Display

T2CAS installations require at least one TAWS terrain hazard display. ARINC 708A and ARINC 429 WXR display and EFIS interfaces are supported. Figure 1-15 shows a typical single ARINC 708A terrain hazard display interface. T2CAS' dual-independent terrain hazard display I/O supports dual ARINC 708A and dual ARINC 429 terrain hazard display systems.

(1) Functional Description and Operation

The terrain hazard display function enhances situational awareness by providing a display of terrain-related hazardous situations in front of the aircraft on existing ARINC 708A compatible weather radar or EFIS flight deck displays. The display may be either the EFIS Navigation Display (for EFIS-equipped aircraft) or the weather radar display. A crew-activated switch is used to select/deselect the terrain image on the display.

Use or disclosure of information on this page is subject to the restrictions in the proprietary notice of this document.

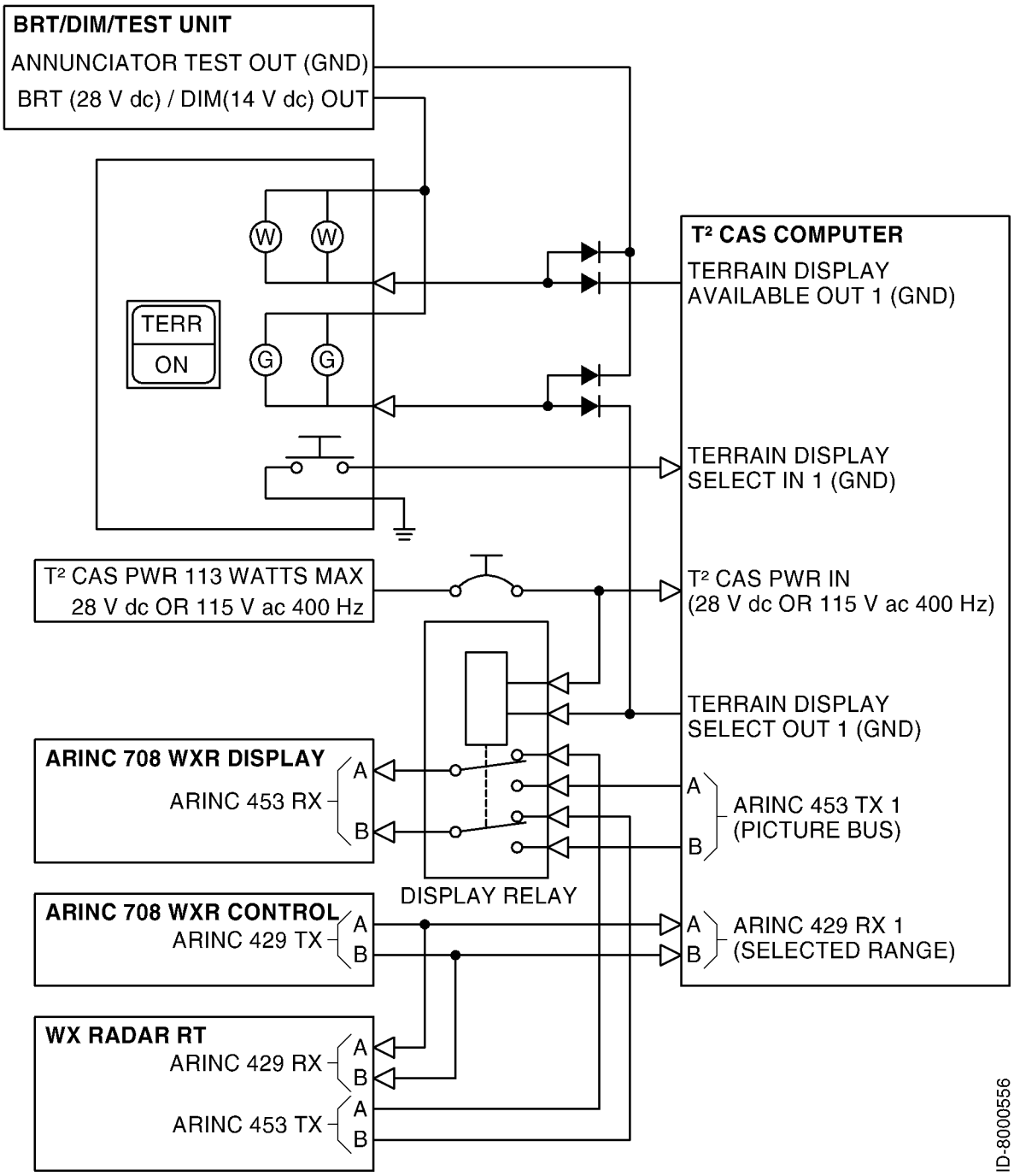

Figure 1-15. Typical T2CAS Single Terrain Hazard Display Interface

Use or disclosure of information on this page is subject to the restrictions in the proprietary notice of this document.

I. XS-950 Mode S Data Link Transponder

The XS-950 Data Link Transponder provides surveillance functions to ground based and airborne interrogators, and communication functions to various onboard systems. The transponder contains data link functions that allow it to function as part of the Aircraft Telecommunications Network (ATN). The data link functions allow communication with a Communication Management Unit (CMU) through a Mode S Airborne Data Link Processor (ADLP). The transponder also contains Mode S specific functions that are dedicated links to onboard systems. The XS-950 Transponder has the capability to be upgraded to provide an internal airborne data link processor (ADLP) function.

The XS-950 Transponder conforms to the ARINC 718A Mode S Transponder Characteristic for form, fit and function, and is backward compatible with existing ARINC 718 installations. It is certified to ICAO level IV data link capability and can be upgraded to level V data link capability.

The XS-950 Data Link Transponder is packaged in a 4-MCU (Modular Concept Unit) outline as defined in ARINC Characteristic 600-7. The unit is able to utilize ARINC 404 cooling air moving through the LRU in a downward direction as well as ARINC 600 cooling air moving through the LRU in an upward direction. The rear connector receptacle is an ARINC 600 size 2 shell assembly with inserts and contacts as defined in ARINC Characteristic 718A. The unit also features a fixed carrying handle and self-test button with discrete LRU STATUS annunciators.

Figure 1-16 shows a graphical view of the XS-950 Data Link Transponder and Table 1-10 gives items and specifications particular to the transponder.

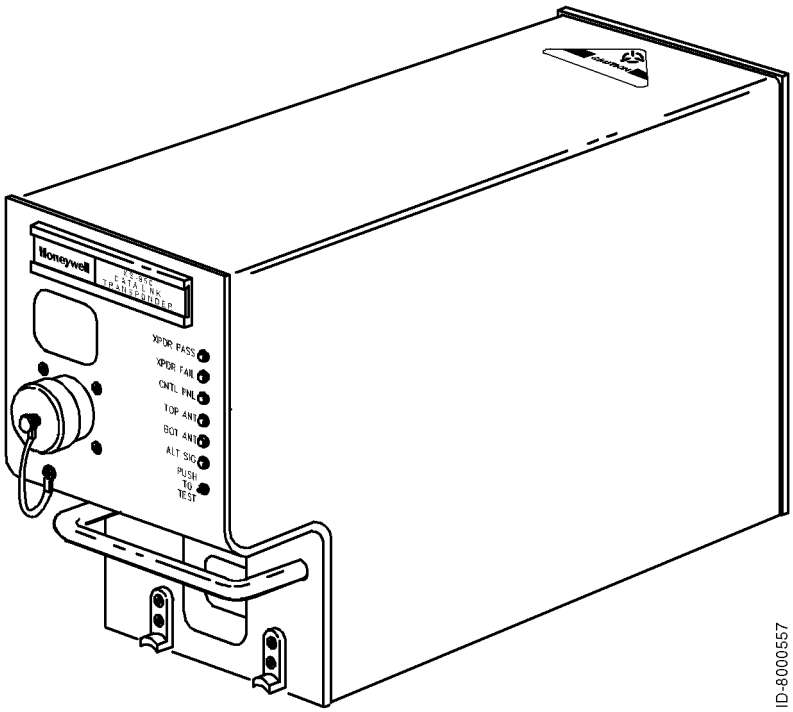

Figure 1-16. XS-950 Data Link Transponder

Use or disclosure of information on this page is subject to the restrictions in the proprietary notice of this document.

Table 1-10. XS-950 Data Link Transponder Leading Particulars

Item	Specification
Dimensions (maximum):	
• Height	7.6 in. (192 mm)
• Width	4.9 in. (124.5 mm)
• Length	15.2 in. (386 mm)
Weight	11.5 lb (5.2 kg)
Power Requirements (115 V ac version):	
• Operating Voltage	97 to 134 V rms, 115 V rms nominal
• Operating Frequency	320 to 480 Hz, 400 Hz nominal
• Power Consumption:	
- Standby Mode (No Replies)	40 Watts maximum
- Active mode (Maximum Load)	85 Watts maximum
• External Circuit Breaker Rating	5 A at 115 V ac, 400 Hz
Power Requirements (28 V dc version):	
• Operating Voltage	+18.0 to +32.2 V dc, +27.5 V dc nominal
• Power Consumption:	
- Standby Mode (No Replies)	40 Watts maximum
- Active mode (Maximum Load)	85 Watts maximum
• External Circuit Breaker Rating	7 A at 28 V dc
Mating Connector	Radiall Part No. NSXN2P203X0005
Mounting	ARINC 600 4MCU Tray Assembly
TSO	C112, CL043, 121, F11
Environmental Specifications:	DO-160C Environmental Category
- 115 V ac version	[A2E1]-BB[CLMY]XXXXXXZEAEZRZA3E3XX
- 28 V dc version	[A2E1]-BB[CLMY]XXXXXXZ[BZ]AZZRZA3E3XX
• Temperature / Altitude [A2E1]:	
- Operating Temperature	-55 to +70 degrees C
- Ground Survival Temperature	-55 to +85 degrees C
- Altitude	Sea Level to 70,000 feet
- Loss of Cooling	+40 degrees C for 30 minutes minimum

Use or disclosure of information on this page is subject to the restrictions in the proprietary notice of this document.

Table 1-10. XS-950 Data Link Transponder Leading Particulars(cont)

Item	Specification
• Vibration [CLMY]:	
- Category C	Fixed wing turbojet engine, fuselage mounting
- Category L	Fixed wing reciprocating and turboprop multi and single engine over 12,500 pounds, fuselage mounting
- Category M	Fixed wing reciprocating and turboprop multi and single engine less than 12,500 pounds, instrument panel/console and equipment rack mounting
- Category Y	Helicopter, reciprocating and turbojet, fuselage mounting
Operating Modes:	
• STANDBY	Ready but not replying
• ATC ON	Transponder Modes A and S, no altitude reporting
• ATC ALT	Transponder Modes A, C, and S. Altitude reporting is enabled
Transmitter Frequency	1090 ±1.0 MHz
Transmitter Power	640 Watts maximum peak pulse, 250 Watts minimum
Receiver Frequency	1030 MHz
Minimum Trigger Level (MTL)	-76 ± 3 dBm
Mutual Suppression	Bidirectional, accepts +18 to +70 volt pulse input; provides +28 volt nominal output
Controller Interface:	
• Circuit Configuration	Two ARINC 429 control data input ports. 12.5 K bits/s (low-speed ARINC)
• Bus Protocol	Bus protocol meets requirements defined in ARINC 718 for receiving transponder and TCAS control information.
TCAS II Interface:	
• Circuit Configuration	ARINC 429 input and output bus. 100 K bits/s (high-speed ARINC)
• Bus Protocol	Bus protocol meets requirements defined in ARINC 718 and ARINC 735 for standard transponder to TCAS interface

Use or disclosure of information on this page is subject to the restrictions in the proprietary notice of this document.

Table 1-10. XS-950 Data Link Transponder Leading Particulars(cont)

Item	Specification
Airborne Data Link Processor (ADLP) Interface:	
• Circuit Configuration	COMM-A/B messages have an ARINC 429 input and output bus. COMM-C/D messages have an ARINC 429 input and output bus. Both sets of busses are 100 K bits/s (high-speed ARINC).
• Bus Protocol	Bus protocol meets requirements defined in ARINC 718 for standard transponder to ADLP bus interface.
Altimeter Interface:	
• Digital Air Data	ARINC 429 or 575 data format. 12.5 K bits/s (low-speed ARINC). Two altimeter inputs (left and right altimeters).
• Synchro Altitude	ARINC 407 data format. Fine and course 3-wire synchro inputs and a synchro valid flag discrete input. Two sets of synchro altimeter inputs (left and right altimeters).
• Analog Altitude (-20012, -65012 Only)	Three wire proportional input with valid flag discrete input. Two altimeter inputs (left and right altimeters). Discrete input to enable altitude comparison.
• Encoding Altimeter	Gillham altitude data format. 11-wire discrete input. Two altimeter inputs (left and right altimeters). Discrete input to enable altitude comparison.
• Altitude Selection	Altitude source (left and right) selected by discrete input.
Flight Identifier Interface:	
• Circuit Configuration	ARINC 429 input bus. 12.5 K bits/s (low-speed ARINC).
• Bus Protocol	Flight identification field consists of eight ISO-5 characters input to the transponder in four ARINC 429 labels (233, 234, 235, 236) per the requirements defined in ARINC 718.
Aircraft Air/Ground Status Interface	Two discrete inputs used to indicate the aircraft air/ground status.
Maintenance Computer Interface:	
• Circuit Configuration	ARINC 429 input and output bus. 12.5 K bits/s (low-speed ARINC).
• Bus Protocol	The maintenance computer interface meets protocol requirements for all model Airbus, Boeing, and McDonnell Douglas maintenance computers.

Use or disclosure of information on this page is subject to the restrictions in the proprietary notice of this document.

Table 1-10. XS-950 Data Link Transponder Leading Particulars(cont)

Item	Specification
Onboard Software Uploading / Maintenance Log Downloading:	
• Circuit Configuration	Portable Data Loader thru ARINC 615 Front Panel Connector ARINC 429 input and output bus (100 K bits/s) PDL Link A discrete input RS-232 input/output bus (38.4 K bits/s) at 53-pin PDL connector Airborne Data Loader thru Unit Rear Connector ARINC 429 input and output bus (100 K bits/s) ADL Link A discrete input
• Bus Protocol	Software uploads thru ARINC 429 PDL (front panel) port or ARINC 429 ADL (rear connector) port per the protocol in ARINC 615 high-speed data loader Maintenance log downloads thru ARINC 429 PDL port or ARINC 429 ADL port per the protocol in ARINC 615 high-speed data loader Software uploads and maintenance log downloads can be accomplished through the PDL front panel port with an RS-232 interface bus and a PC with terminal emulation software

Use or disclosure of information on this page is subject to the restrictions in the proprietary notice of this document.

J. RCZ-852 Diversity Mode S Transponder

The RCZ-852 Diversity Mode S Transponder is an airborne transponder designed to perform both conventional and advanced air traffic control (ATC) functions. It receives coded radar signals from ATC ground stations and other aircraft and transmits coded replies. The replies contain information such as aircraft identity, altitude, and data communication messages.

The transponder works with the air traffic control radar beacon system (ATCRBS) and mode select (Mode S) system to provide enhanced surveillance and communications capability required for air traffic control system automation and onboard collision avoidance systems. It has antenna diversity and is defined as a Class 3A transponder with TCAS interface capability. The RCZ-852 Diversity Mode S Transponder has the capabilities that follow:

- Surveillance functions of both ATCRBS and Mode S ground sensors
- Surveillance functions of airborne interrogators
- Bi-directional air-to-air information exchanges, COMM-U/V
- Ground-to-Air data uplink, COMM-A
- Air-to-Ground data downlink, COMM-B
- Multisite message protocol
- Ground-to-Air extended length message (ELM), COMM-C.

The transponder does not support COMM-D extended length message (ELM) communication.

Figure 1-17 shows a graphical view of the RCZ-852 Diversity Mode S Transponder and Table 1-11 gives items and specifications particular to the transponder.

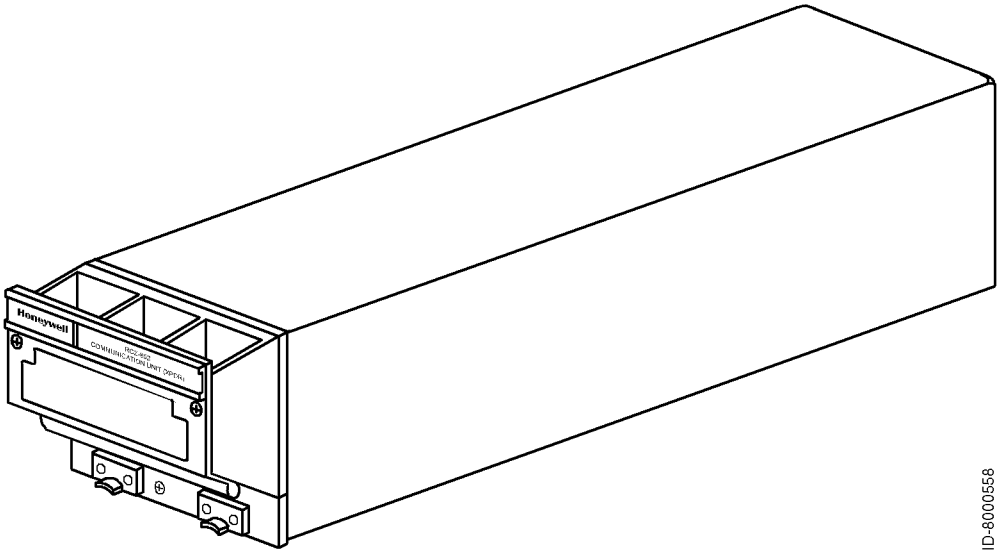

Figure 1-17. RCZ-852 Diversity Mode S Transponder

Use or disclosure of information on this page is subject to the restrictions in the proprietary notice of this document.

Table 1-11. RCZ-852 Diversity Mode S Transponder Leading Particulars

Item	Specification
Dimensions (maximum):	
• Height	3.38 in. (86 mm)
• Width	4.10 in. (104 mm)
• Length	14.1 in. (358 mm)
Weight	5.0 lb (2.27 kg)
Power Requirements:	
• Operating Voltage	+18.0 to +30.3 V dc, +27.5 V dc nominal
• Power Consumption:	
- Standby Mode (No Replies)	28 Watts nominal
- Active Mode (Maximum Load)	55 Watts maximum
• External Circuit Breaker Rating	5 A at +27.5 V dc
Mating Connector	Radiall Part No. NSXN2P203X0005 (Part of Installation Kit, ACSS Part No. 7510707-968)
Mounting	Mount Assembly, ACSS Part No. 7517455-902
TSO	C112
Environmental Specifications	DO-160B Environmental Category /A2E1/B/JLMY/E1XXXXXZ/BZ/AZZ
• Temperature / Altitude [A2E1]:	
- Operating Temperature	-55 to +70 degrees C
- Ground Survival Temperature	-55 to +85 degrees C
- Altitude	Sea Level to 70,000 feet
- Decompression	8,000 to 70,000 feet
- Overpressure	-15,000 feet
• Vibration [JLMY]:	
- Category J	Fixed wing turbojet, subsonic and supersonic, fuselage mounting
- Category L	Fixed wing reciprocating and turboprop multi and single engine over 12,500 pounds, fuselage mounting
- Category M	Fixed wing reciprocating and turboprop multi and single engine less than 12,500 pounds, instrument panel/console and equipment rack mounting
- Category Y	Helicopter, reciprocating and turbojet, fuselage mounting

Use or disclosure of information on this page is subject to the restrictions in the proprietary notice of this document.

Table 1-11. RCZ-852 Diversity Mode S Transponder Leading Particulars (cont)

Item	Specification
Operating Modes:	
• STANDBY	Ready but not replying.
• ATC ON	Transponder Modes A and S. No altitude reporting.
• ATC ALT	Transponder Modes A, C, and S. Altitude reporting is enabled.
Transmitter Frequency	1090 ± 0.5 MHz
Transmitter Power	500 Watts peak pulse, 250 Watts minimum
Receiver Frequency	1030 MHz
Minimum Trigger Level (MTL)	-77 ± 3 dBm
Mutual Suppression	Bidirectional, accepts +18 to +70 volt pulse input, provides +28 volt nominal output
Controller interface:	
• Circuit Configuration	Two ARINC 429 control data input ports. 12.5 K bits/s (low-speed ARINC) Radio System Bus (RSB)
• Bus Protocol	Bus protocol meets requirements defined in ARINC 718 for receiving transponder and TCAS control information. The Radio System Bus (RSB) is designed to work with the Honeywell Radio Management Unit.
TCAS II Interface:	
• Circuit Configuration	ARINC 429 input and output bus. 100 K bits/s (high-speed ARINC).
• Bus Protocol	Bus protocol meets requirements defined in ARINC 718 and ARINC 735 for standard transponder to TCAS interface.
Airborne Data Link Processor (ADLP) Interface:	
• Circuit Configuration	COMM-A/B messages have an ARINC 429 input and output bus. COMM-C/D messages have an ARINC 429 input and output bus. Both sets of busses are 100 K bits/s (high-speed ARINC).
• Bus Protocol	Bus protocol meets requirements defined in ARINC 718 for standard transponder to ADLP bus interface.
• Exception	COMM-D messages are not processed by this transponder.

Use or disclosure of information on this page is subject to the restrictions in the proprietary notice of this document.

Table 1-11. RCZ-852 Diversity Mode S Transponder Leading Particulars (cont)

Item	Specification
Altimeter Interface:	
• Digital Air Data	ARINC 429 or 575 data format. 12.5 K bits/s (low-speed ARINC). Two altimeter inputs (left and right altimeters).
• IAC Air Data	Radio System Bus (RSB) interface supplies the Honeywell Integrated Avionics Computer (IAC) digital air data information. Two altimeter inputs (left and right altimeters).
• Encoding Altimeter	Gillham altitude data format. 11-wire discrete input. Two altimeter inputs (left and right altimeters). Discrete input to enable altitude comparison.
• Altitude Selection	Altitude source (left or right) selected by a discrete input.
Flight Identifier Interface:	
• From Radio Management (RMU)	Flight identifier input from the RMU in RSB data format.
• From Flight Management System (FMS)	Flight identifier input from the FMS in ARINC 429 data format. 12.5 K bits/s (low-speed ARINC).
Aircraft Air/Ground Status Interface	Two discrete inputs used to indicate the aircraft air/ground status.
Antenna Selection Interface	A discrete output supplies a GROUND when transponder is active.
RCB Interface:	
• Circuit Configuration	2-wire full duplex RS-232 serial link to/from internal radio communications bus (RCB).
• Transmission Rate	187.5 K baud
• Transmission Format	1 start bit, 8 data bits and 1 stop bit
Shop Flash Memory Programming Interface:	
• Circuit Configuration	2-wire full duplex RS-232 serial port
• Transmission Rate	19.2 K baud
• Transmission Format	1 start bit, 7 data bits, odd parity and 1 stop bit

Use or disclosure of information on this page is subject to the restrictions in the proprietary notice of this document.

5. System Operation

A. TCAS Operation

The principal modes of operation and display features of the TCAS function are discussed in the paragraphs that follow. In-flight procedures with display examples are contained in the T2CAS Pilot's Manual, ACSS Publication No. 8000264-001.

(1) Operational Modes

The TCAS function can operate in several different modes, depending on control panel selection. Several control panels are available. Only the ACSS single Mode S control panel is discussed. Other control panels provide similar features.

Four switches directly affect the TCAS operational mode: TCAS/XPDR mode selector, TA DSPLY selector, ALT RPTG selector, and TCAS TEST switch. To distinguish the modes that provide TCAS advisories from those that do not, the operational modes are discussed under TCAS modes and non-TCAS modes. The non-TCAS modes are annunciated TCAS OFF at the center of the display.

The extended test mode is mentioned for reference. A detailed description of its use can be found in the FAULT ISOLATION section.

(a) TCAS Modes

The TA/RA and the TA-only modes are the two TCAS operational modes. The TA/RA mode gives traffic information and warnings of hazardous traffic conflicts, while the TA mode gives only traffic information. A third mode, the TEST mode, can be temporarily activated from any mode including standby (STBY). The TEST mode does not inhibit the generation of advisories. Functions available in the operational and test modes are as follows:

1 TA/RA Mode

This mode is the normal operation mode providing full TCAS coverage. In this mode, TCAS tracks all aircraft in the surrounding airspace and generates traffic advisories or resolution advisories, as the situation requires. Figure 1-3 contrasts the airspace covered for each kind of advisory.

For normal TA/RA operation, the TA/DSPLY selector must be set to AUTO or ON and the ALT/RPTG selector must be set to 1 or 2.

2 TA Mode

The TA mode provides only surveillance of the surrounding airspace. In this mode, TCAS tracks all proximate aircraft and generates traffic advisories; no resolution advisories are issued in this mode.

The flight crew uses the TA-only mode when resolution advisories would be a nuisance, or when flying over an area where only TCAS surveillance is allowed. Also, the system automatically selects this mode when the aircraft is flying under 1000 feet above ground level (AGL).

The TA mode is annunciated TA ONLY at the upper left corner of the display.

Use or disclosure of information on this page is subject to the restrictions in the proprietary notice of this document.

3 Test Mode

Pushing the TEST button on the control panel starts a self-test program which verifies proper operation of the TA and RA displays and of the aural advisories on the audio system.

The test mode does not affect normal TCAS operation, provided the selected transponder remains in normal operation during the test cycle. Should a TA or RA occur during the test sequence, the test aborts, and the advisory is announced and displayed.

The test mode just described excludes extended self-tests performed on the ground, where TCAS is inoperative.

(b) Non-TCAS Modes

The control panel selections that follow disable TCAS operation and all advisories:

- MODE S ON activates a Mode S transponder only
- STBY sets the selected transponder in standby mode
- ATC activates an ATCRBS transponder only
- ALT RPTG set to OFF inhibits altitude reporting.

When TCAS is inoperative as a result of control panel selection, TCAS OFF is annunciated on the display. When TCAS is inoperative due to a system failure, TA FAIL, RA FAIL, or TCAS FAIL is annunciated on the display. In addition, if the transponder or the altitude data source fails, the XPDR FAIL light on the control panel comes on.

(c) Extended Test Mode

The purpose of the extended test mode is to facilitate diagnosis in the event self-test has failed. Like self-test, this mode is enabled by pushing the TCAS TEST button, but only when TCAS is inoperative. The aircraft must be on the ground, and the transponder must be set to STBY. Push and hold the TCAS TEST button for longer than eight seconds to activate the extended tests. This feature is not available on all systems. Refer to the TESTING AND FAULT ISOLATION section for system requirements and test description.

Use or disclosure of information on this page is subject to the restrictions in the proprietary notice of this document.

(2) Display Symbology

The TCAS modes use color-coded symbols and data tags to map air traffic and locate threat aircraft on the VSI/TRA display.

Four traffic symbols are used: solid circle, solid square, solid diamond, and hollow diamond. See Figure 1-18 for examples. A different color is assigned to each symbol type, as listed in Table 1-12.

Table 1-12. TCAS Traffic Symbols

Graphic Symbol	Color	Display Function
Solid Circle	Amber	Traffic Advisory (TA)
Solid Square	Red	Resolution Advisory (RA)
Solid Diamond	Blue	Proximate Traffic
Hollow Diamond	Blue	Other Traffic
NOTE: TCAS traffic information displayed on EFIS displays such as crew alerting system display, navigation display, electronic horizontal situation display or multifunction display, is similar to that on combined VSI/TRA indicators. Traffic symbology is identical to that displayed on the VSI/TRA.		

(a) Colors

1 Amber

Represents a moderate threat to a TCAS-equipped aircraft. A visual search is recommended to prepare for intruder avoidance. Amber is used only in conjunction with a traffic advisory.

2 Red

Represents an immediate threat to a TCAS-equipped aircraft. Prompt action is required to avoid the intruder. This color is only used in conjunction with a resolution advisory.

3 Blue

Represents proximate traffic and other traffic the TCAS surveillance logic has in its track file.

4 White

Used only for mode annunciations and for reference graphics, including aircraft home position, range ring, and VSI scale.

(b) Traffic Identification

1 Traffic Advisory

Use or disclosure of information on this page is subject to the restrictions in the proprietary notice of this document.

Intruder aircraft entering the caution area, 20 to 48 seconds from the TCAS 2000 collision area are represented as a solid amber circle. This type of traffic results in a traffic advisory.

2 Resolution Advisory

Intruder aircraft entering the warning area, 15 to 35 seconds from the TCAS 2000 collision area are represented as a solid red square. This type of traffic results in a resolution advisory.

3 Proximate Traffic

Aircraft within 6.0 nautical miles and ±1200 feet vertically are represented as a solid cyan diamond. Proximate traffic is shown to improve situational awareness in the event of a potential conflict with higher priority RA or TA aircraft.

4 Other Traffic

Any transponder replying to traffic not classified as an intruder or proximate traffic, and within ±2700 feet vertically and the range of the display are represented as hollow cyan diamonds (only in view with the traffic switch ON and no TA or RA in process). The predicted flightpaths of proximate and other traffic do not penetrate the collision area of the TCAS aircraft.

(c) Data Tags

A data tag, made up of a two-digit number, a plus (+) or a minus (-) sign, and may also include an arrow, appears either above or below the intruder aircraft symbol. The data tag appears in the same color as the advisory.

1 Two-digit Number (Relative Altitude)

Represents the relative altitude difference, in hundreds of feet, either above or below the TCAS aircraft of an intruder aircraft. For an intruder above the TCAS aircraft, the data tag is placed above the traffic symbol and preceded by a plus (+) sign; for one below, the tag is placed below the traffic symbol and be preceded by a minus (-) sign.

2 Plus (+) or Minus (-) Sign

Appears adjacent to the relative altitude number and indicates whether the displayed aircraft is above (plus) or below (minus) the TCAS aircraft.

3 Arrow

A vertical arrow is placed to the immediate right of the traffic symbol if the intruder is either climbing (up arrow) or descending (down arrow) in excess of 500 feet per minute.

Use or disclosure of information on this page is subject to the restrictions in the proprietary notice of this document.

(d) VSI Scale Overlays

During a resolution advisory, red and green bands overlay the VSI scale. The red band indicates what vertical speed range is to be avoided by the pilot (prohibited vertical speed). The green band indicates the vertical speed the pilot is to attain to achieve safe separation from a threat aircraft (recommended vertical speed). The red/green band reflects the RA in progress and acts as a vertical speed advisory for the pilot.

(e) Reference Graphics and Annunciations

A white airplane symbol is displayed in the lower center of the VSI representing the aircraft own position. A white range ring made up of 12 dots, each corresponding to a normal clock position, is included. The range ring surrounds the airplane with a radius of 2 nautical miles and is intended to assist in interpreting TCAS traffic information.

The scale of the VSI display is 6.0 nautical miles to the top display edge of the VSI (ahead of the aircraft), 4 miles to the left and right edges, and 2.5 nautical miles to the bottom (behind the aircraft).

Annunciations in white letters serve as a reminder of the current operation mode. They include TCAS OFF, TA only and RA only. Fault annunciations in amber letters replace the mode annunciations in case of system failure. They include TCAS FAIL, RA FAIL, VSI FAIL, and TA FAIL (traffic display failure). Figure 1–14 shows a typical failure display.

(3) Aural Messages

The TCAS generates aural alerts or messages announced over the aircraft audio system. These messages accompany the visual TA or RA display and are softened or strengthened, depending on the urgency of the situation. The TCAS audio level is preset and is not adjustable by the aircrew.

If a logic change occurs before a message is completed and a new message is initiated, the original alert is terminated and the new alert announced immediately.

(a) Requirements and Limitations

The following is a list of the requirements and limitations for issuing an aural advisory by the T2CAS Computer Unit:

1 Voice announcements are inhibited below 500 feet above ground level (AGL).

2 The CANCEL BUTTON, which is reserved for future use on the –XX001 T2CAS CUs only, halts voice announcements after the CANCEL BUTTON is activated. An aural advisory in progress is terminated and not repeated after deactivation of the CANCEL BUTTON.

Use or disclosure of information on this page is subject to the restrictions in the proprietary notice of this document.

3 During T2CAS computer unit self-test, an aural advisory confirms proper operation of the aural advisory system by annunciating the message “TCAS TEST”. The aural advisory system annunciates the pass/fail status of any monitored functions with the messages “TCAS TEST PASS” and “TCAS TEST FAIL”, respectively.

4 An aural advisory tone will precede each aural advisory when the audio tone enable program pin has been activated.

5 T2CAS computer unit TCAS aural alerts are inhibited when the advisory inhibit discrete input No. 4 is grounded. An aural advisory in progress is disabled after the grounding of advisory inhibit discrete No. 4. The truncated message is annunciated in its entirety once the inhibit discrete has been released. This capability is used to defer all advisory (TA and RA), aural alert, and visual alert outputs until another, higher priority announcement/alert is completed.

6 Increases and decreases in the threat level are aurally annunciated. However, decreases in threat level are annunciated once and are not preceded by setting the audio tone discrete. For example, a vertical speed restriction following a climb RA is annunciated once.

(b) Traffic Advisory (TA) Message

The traffic advisory aural alert, TRAFFIC - TRAFFIC is spoken once, and then inhibited until the next TA occurs. This alert occurs when TCAS predicts an intruder will enter the collision area within 20 to 48 seconds. Simultaneously, the TCAS traffic display shows the location of the intruder.

(c) Resolution Advisory (RA) Messages

Resolution advisories indicate evasive vertical maneuvers calculated to increase separation between the TCAS aircraft and the intruder (corrective advisory), or to indicate certain changes in vertical speed are not recommended (preventive). Resolution advisory messages made up of a single word are repeated three times; longer messages are repeated twice.

RAs are annunciated on the T2CAS computer unit using the voice messages listed below as determined by Collision Avoidance System (CAS) data. The following messages will not immediately follow another message from this paragraph if it causes a reversal of sense. For example, a “CLIMB, CLIMB” message cannot immediately follow a :”DESCEND, DESCEND” message.

1 “CLIMB, CLIMB”: Climb at the rate shown on the VSI or other suitable indicator.

2 “DESCEND, DESCEND”: Descend at the rate shown on the VSI or other suitable indicator.

Use or disclosure of information on this page is subject to the restrictions in the proprietary notice of this document.

3 "MONITOR VERTICAL SPEED": Verify that vertical speed is out of the illuminated red VSI arc, or comply with another suitable indicator. Additional T2CAS CU messages are "MAINTAIN VERTICAL SPEED, MAINTAIN: MAINTAIN VERTICAL SPEED, CROSSING MAINTAIN": or "ADJUST VERTICAL SPEED, ADJUST". Safe separation is based upon maintaining the current vertical speed.

4 "ADJUST VERTICAL SPEED, ADJUST": Reduce climb or descent rate.

5 "MAINTAIN VERTICAL SPEED, MAINTAIN": Safe separation is based upon maintaining the current vertical speed.

6 "MAINTAIN VERTICAL SPEED, CROSSING, MAINTAIN": Maintain vertical speed while crossing the intruder's flight path. This advisory is implemented on –XX003 TCAS CUs.

7 "CLEAR OF CONFLICT": Range is increasing, and separation is adequate; return to assigned clearance.

8 "CLIMB, CROSSING CLIMB—CLIMB, CROSSING CLIMB": Safe separation is best be achieved by climbing through intruder's flight path.

9 "DESCEND, CROSSING DESCEND, DESCEND, CROSSING DESCEND": Safe separation is best achieved by descending through the intruder's flight path.

(d) Enhanced RA Messages

Enhanced RAs are annunciated on the T2CAS computer unit using the voice messages listed below as designated by the CAS data when the initial resolution advisory does not provide sufficient vertical separation. These messages are annunciated to convey a sense of urgency. The following messages can immediately follow a message from the previous paragraph and have a reversal of sense.

NOTE: These advisories are expected to occur only on rare occasions, usually when an intruder suddenly changes its current flightpath. (Maneuvering intruder)

1 "INCREASE CLIMB, INCREASE CLIMB": (Received after a "CLIMB" advisory) Indicates additional climb rate required to achieve safe vertical separation from a maneuvering intruder.

2 "INCREASE DESCENT, INCREASE DESCENT": (Repeated two times, received after "DESCEND" advisory) Indicates additional descent rate required to achieve safe vertical separation from a maneuvering intruder.

3 "CLIMB, CLIMB NOW!—CLIMB,CLIMB NOW!": (Received after a "DESCEND" resolution advisory) Indicates a reversal in sense is required to achieve safe vertical separation from a maneuvering intruder.

Use or disclosure of information on this page is subject to the restrictions in the proprietary notice of this document.

4 "DESCEND, DESCEND NOW!—DESCEND, DESCEND NOW!": (Received after a "CLIMB" resolution advisory) Indicates a reversal in sense is required to achieve safe vertical separation from a maneuvering intruder.

(4) Operating Procedures

Basic TCAS operating procedures on the ground include pre-flight test, TCAS activation before takeoff, and TCAS deactivation after landing. In-flight procedures are contained in the pilot's manual.

(a) Pre-Flight Test

The VSI/TRA self-test feature provides a convenient method to test the TCAS system before takeoff.

NOTE: Self-test can be initiated at any time, on the ground or in flight (if not disabled in air by grounding pin RBP-8E), by momentarily pushing TCAS TEST. If TAs and RAs occur while self-test is activated in flight, the test aborts, and the advisories are processed and displayed.

To perform self-test, push the TCAS TEST button on the control panel and monitor the sequence that follows:

- Aural annunciation TCAS TEST is heard on audio system.
- Test pattern with fixed traffic and advisory symbols appears on the display for eight seconds.
- Make sure the test pattern is as shown in Figure 1-18. The test pattern includes:
  - An RA symbol at 3 o'clock, 2 nm, 200 ft above, in level flight
  - A TA symbol at 9 o'clock, 2 nm, 200 ft below, climbing
  - A proximate traffic symbol at 3.6 nm, 33 degrees right of the aircraft heading (approximately 1 o'clock), 1000 ft below, descending
  - A non-threat intruder (other traffic symbol) at 3.6 nm, 33 degrees left of the aircraft heading (approximately 11 o'clock), 1000 ft above, in level flight
  - Red and green resolution advisory VSI overlay indicating a don't descend, don't climb > 2000 ft/min advisory
  - TCAS TEST or RA OFF annunciation, depending on the capabilities of the display.
  - After 8 seconds, TCAS TEST PASS is announced, and the test pattern is replaced with the normal VSI display.
  - If self-test fails, TCAS TEST FAIL is announced, and TCAS FAIL appears on the display. To obtain failure data, perform the extended test mode procedure in the next section.

(b) TCAS Mode Activation

Prior to takeoff, activate TCAS as follows:

Use or disclosure of information on this page is subject to the restrictions in the proprietary notice of this document.

- Set TCAS/XPDR mode selector to TA/RA
- Set TA/DSPLY to AUTO
- Set ALT/RPTG to 1 or 2.

(c) TCAS Mode Deactivation

After clearing the runway following landing, set the TCAS/XPDR mode selector to STBY to disable Mode S communication.

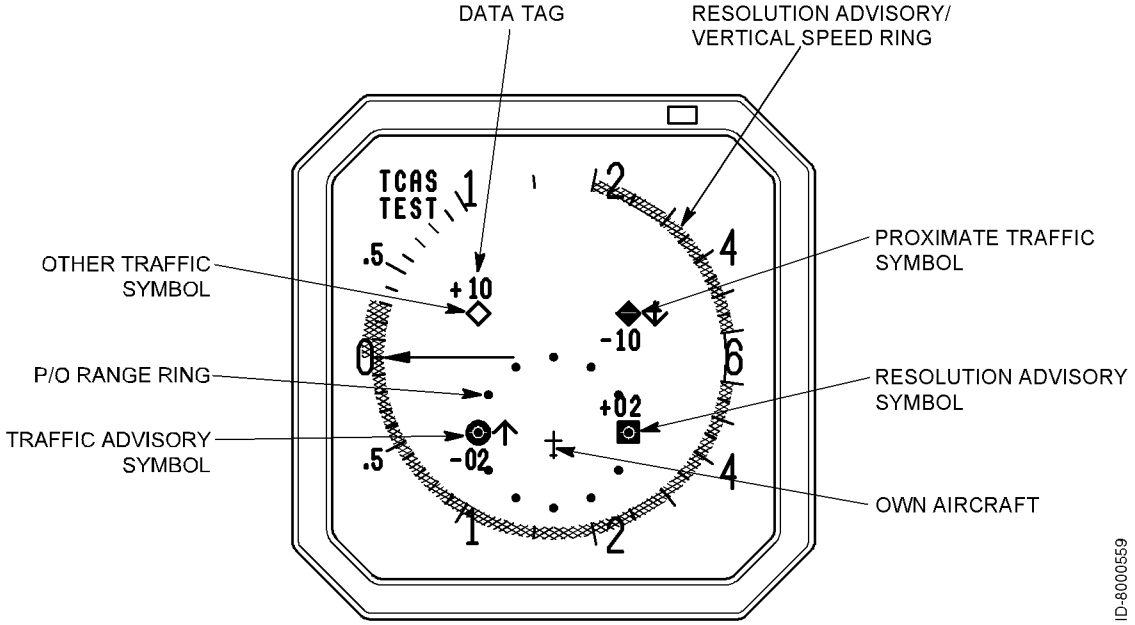

Figure 1-18. TCAS II Display Test Pattern

B. TAWS/RWS Operation

The principal modes of operation and display features of the TAWS/RWS function are discussed in the paragraphs that follow. In-flight procedures with display examples are contained in the T2CAS Pilot's Manual, ACSS Publication No. 8000264-001.

(1) TAWS Operational Modes

The T2CAS TAWS function provides both conventional GPWS and Collision Prediction & Alerting (CPA) modes of operation.

The conventional GPWS modes of operation are as follows:

(a) Mode 1: Excessive Rate of Descent with respect to Terrain

When the CPA mode is inoperative, this mode provides, as defined in RTCA DO-161A, a reactive medium-term caution and a reactive short-term warning when the current flight path is descending toward the terrain ahead of the aircraft at an excessive rate. Figure 1-19 shows Mode 1 - Excessive Descent Rate Envelope.

Use or disclosure of information on this page is subject to the restrictions in the proprietary notice of this document.

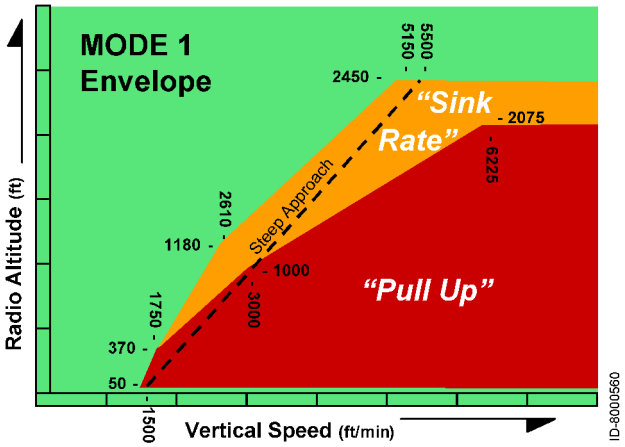

Figure 1-19. Mode 1 - Excessive Descent Rate Envelope

(b) Mode 2: Excessive Closure Rate to Terrain

When the CPA mode is inoperative, this mode provides, as defined in RTCA DO-161A, a reactive medium-term caution and a reactive short-term warning when the current flight path and the terrain ahead of the aircraft are closing at an excessive rate. Figure 1-20 shows Mode 2 - Excessive Terrain Closure Rate Envelope.

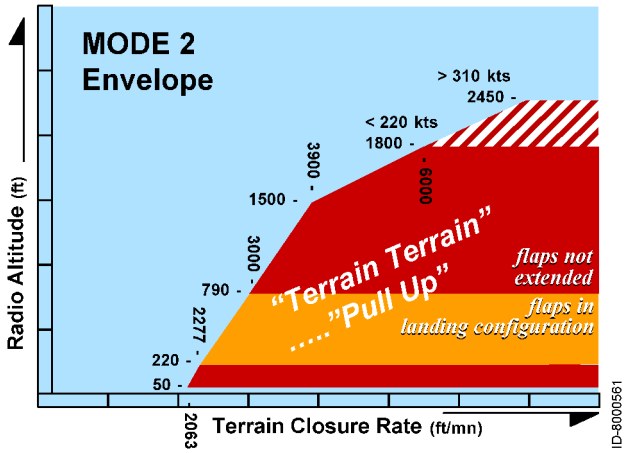

Figure 1-20. Mode 2 - Excessive Terrain Closure Rate Envelope

Use or disclosure of information on this page is subject to the restrictions in the proprietary notice of this document.

(c) Mode 3: Excessive Altitude Loss after Take-off

This mode provides, as derived from RTCA DO-161A, an alert when there is a loss of altitude after take-off or during a missed approach. Figure 1-21 shows Mode 3 - Loss of Altitude After Take Off Envelope.

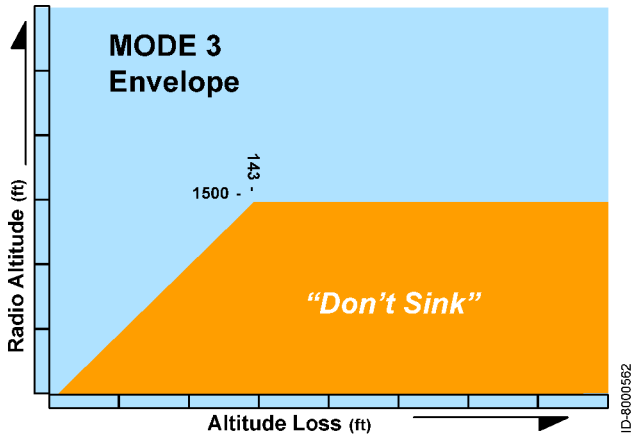

Figure 1-21. Mode 3 - Excessive Altitude Loss After Take Off Envelope

(d) Mode 4: Incorrect Aircraft Configuration with regard to Terrain

T2CAS meets the requirement for Mode 4 alerts as defined in RTCA DO-161A. Mode 4 applies during the landing phase of flight and results in the annunciation of an alert in the event of insufficient terrain clearance when the aircraft is not in the proper landing configuration. Mode 4 consists of the following two sub-modes:

- Mode 4A, when the landing gear is up
- Mode 4B, when the landing gear is down, but the flaps are not in landing configuration

Figure 1-22 shows Mode 4 - Unsafe Terrain Clearance Envelope.

Use or disclosure of information on this page is subject to the restrictions in the proprietary notice of this document.

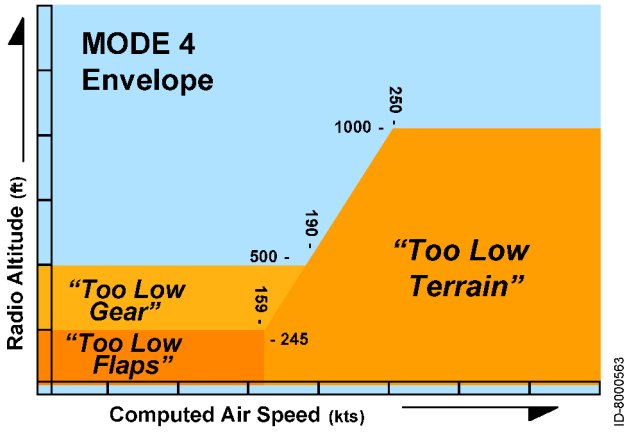

Figure 1-22. Mode 4 - Unsafe Terrain Clearance Envelope

(e) Mode 5: Excessive Glide Path Deviation

T2CAS meets the requirement for Mode 5 alerts as defined in RTCA DO-161A. Mode 5 applies in the event of an excessive descent below the instrument glide path when making a front-course approach with the gear down. In a back-course landing configuration, mode 5 is automatically inhibited. Figure 1-23 shows Mode 5 - Excessive Glide Path Deviation Envelope.

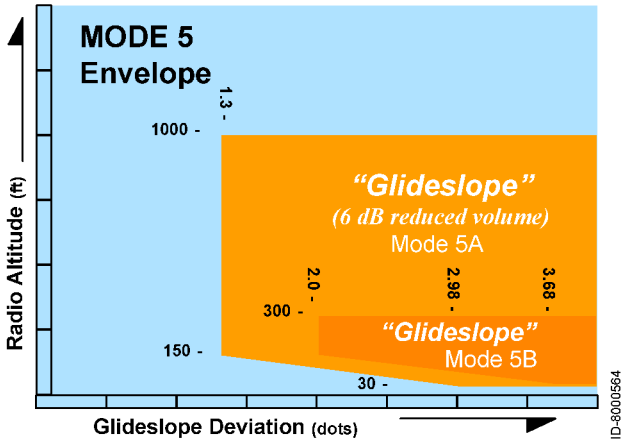

Figure 1-23. Mode 5 - Excessive Glide Path Deviation Envelope

(f) Altitude Call-outs

The T2CAS TAWS function produces call-outs and alerts for descent below a set of customer defined altitudes.

Use or disclosure of information on this page is subject to the restrictions in the proprietary notice of this document.

(g) Excessive Bank Angle

The T2CAS TAWS function produces call-outs and alerts for descent below a set of predefined altitudes and for excessive bank angle. Figure 1-24 shows Excessive Bank Angle Envelope.

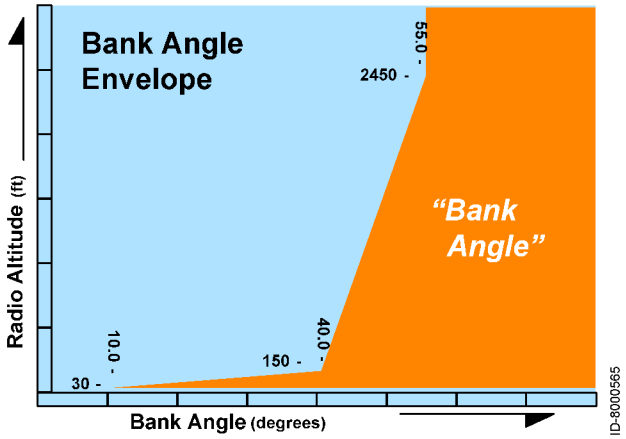

Figure 1-24. Excessive Bank Angle Envelope

The CPA mode of operation provides medium-term (caution) and short-term (warning) alerts to inform the crew that the flight path they are following is hazardous due to the presence of terrain ahead. The objective of the CPA function is to warn the crew of an impending controlled flight into terrain with sufficient time for them to assess the situation and safely avoid the terrain hazard. All CPA predictions are based on the assumption that the operational escape maneuver in case of a terrain hazard will be a "pull up" evasive action. CPA predictions model a conservative pull up escape maneuver based on current aircraft climb capability.

The T2CAS CPA function provides alerts in the following CFIT situations:

- Hazardous descent rate with respect to terrain
- Hazardous closure rate with respect to terrain
- Hazardous terrain ahead situation during turns
- Hazardous high terrain ahead situation that can not be cleared by a pull up maneuver

Use or disclosure of information on this page is subject to the restrictions in the proprietary notice of this document.

(2) RWS Operational Mode

Whenever wind factors cause aircraft performance to decrease to a predetermined level, an audio warning is sounded, indicating to the crew that the aircraft net performance capability is deteriorating and rapidly approaching a critical state. In addition to the warning, the Windshear Warning algorithm provides a caution when an increasing-performance Windshear is detected, thus giving advance warning of decreasing-performance windshear. Figure 1-25 illustrates reactive windshear detection.

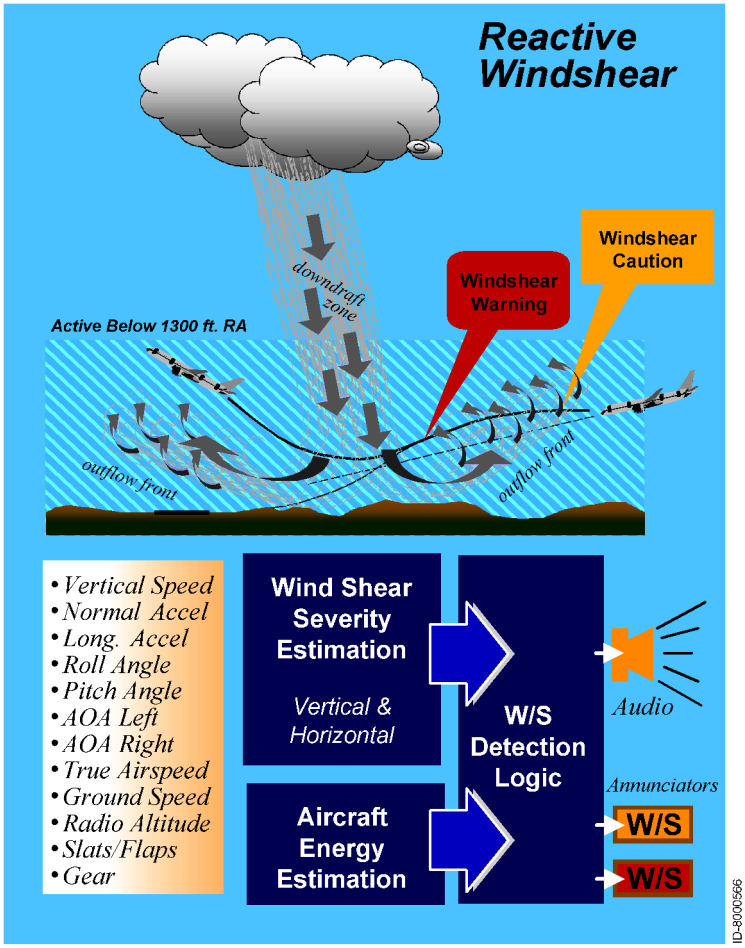

Figure 1-25. Windshear Detection

(3) TAWS Display Symbology

The terrain hazard display function generates an image that provides the following information to the flight crew:

- A Terrain Display Background consisting of shaded areas representing terrain at different altitudes relative to the aircraft altitude
- An Alert Line depicting the point or points where a CPA caution will occur if the aircraft continues on its current trajectory

Use or disclosure of information on this page is subject to the restrictions in the proprietary notice of this document.

- Terrain Alert areas corresponding to the terrain that is causing a CPA caution or warning.

Each of these features is explained in the following sub-sections.

(a) Terrain Display Background

The purpose of the Terrain Display Background is to provide overall situational awareness to the crew about the relative height of the terrain near the aircraft.

The terrain is divided into "slices" based on the elevation of the terrain with respect to an aircraft reference altitude. Slices above or very near the reference altitude are typically shown as varying shades of yellow. Slices safely below the reference altitude are typically shown as varying shades of green or even black.

The reference altitude is a surface starting at the aircraft and propagating forward along the aircraft flight path angle for 30 seconds. The reference altitude surface then extends horizontally at the altitude the aircraft is expected to have at that time (i.e., 30 seconds in the future).

The specific colors and textures used for the various slices, as well as the threshold altitudes for the slices, are contained in the Aircraft Specific Database (ASDB) and thus can be tailored for specific installations. Figure 1-26 shows a typical color scheme and altitude definitions. (Note: The figure is drawn in color. If this document is printed in black and white, the different yellow and green textures representing different terrain elevations will appear as different shades of gray.)

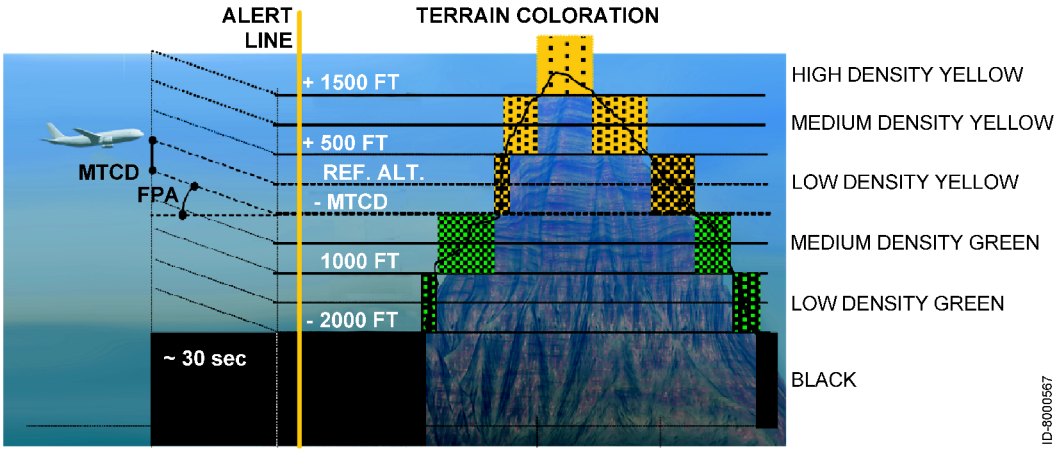

Figure 1-26. Terrain Slices

Use or disclosure of information on this page is subject to the restrictions in the proprietary notice of this document.

A typical terrain background image is shown in Figure 1-27

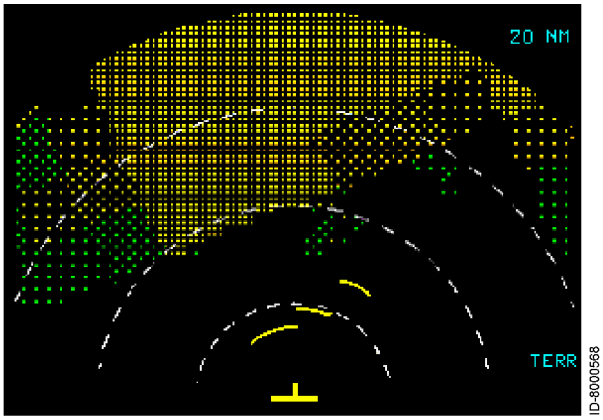

Figure 1-27. Terrain Display Background

(b) Alert Line Display

The Terrain Hazard Display can also depict an Alert Line. The Alert Line is drawn at the points where a CPA caution will occur if the aircraft continues along it's current vertical trajectory. When there are no CPA cautions or warnings active, T2CAS TAWS will determine if an alert line needs to be drawn. Beginning at the current aircraft position, T2CAS TAWS looks ahead of the aircraft to determine where a CPA caution will occur. T2CAS TAWS will look up to 120 seconds into the future and look at all headings within 30 degrees of the current aircraft heading. If any CPA cautions would be triggered in this area, the alert line will be drawn on the terrain hazard display.

Figure 1-28 illustrates the alert line. The alert line is the solid yellow line located at about the 5 NM range ring. As the aircraft continued, this line (as well as the background terrain) would get closer to the aircraft symbol. When the alert line reached the aircraft symbol, a CPA caution would occur. Thus the alert line provides the flight crew an advance indication of when CPA alerts will occur. The alert line is not displayed when a CPA caution or warning is active.

Use or disclosure of information on this page is subject to the restrictions in the proprietary notice of this document.

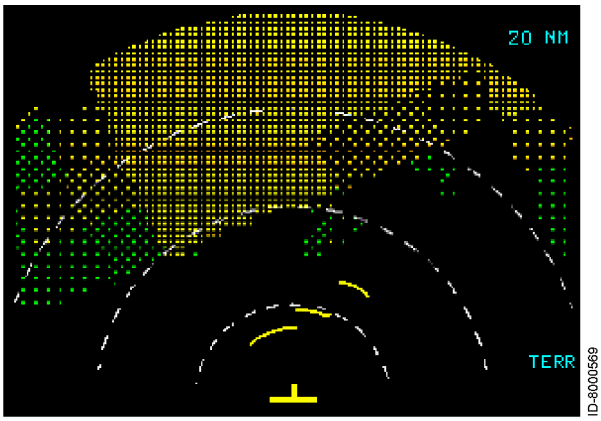

Figure 1-28. Alert Line

(c) Display of Terrain Alerts

When a CPA caution or warning occurs, the terrain that caused the alert will be displayed on the Terrain Hazard Display. Solid yellow is used for cautions, solid red is used for pull-up warnings, and black x's on a solid red background are used for avoid terrain warnings.

In Figure 1-29, the caution alarm is generated through the TAWS display by highlighting the hazardous area ahead of the aircraft in yellow and generating a yellow "TERRAIN" message on the bottom right of the screen. An aural message is also played on the flight deck.

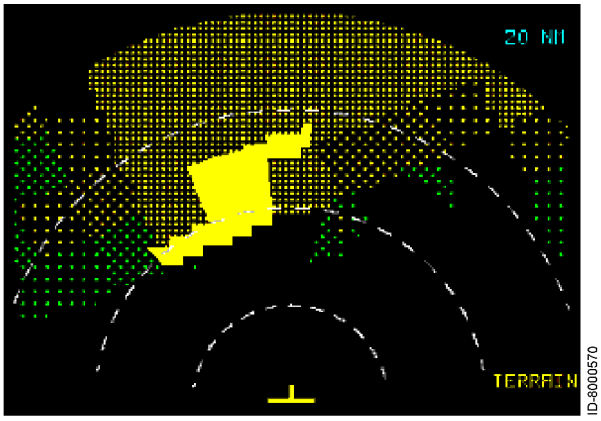

Figure 1-29. Terrain Hazard Display Upon Caution Alert

Use or disclosure of information on this page is subject to the restrictions in the proprietary notice of this document.

In Figure 1-30, the warning alarm is generated through the TAWS display by highlighting the hazardous area ahead of the aircraft in red and generating a red ”TERRAIN” message on the bottom right of the screen. An aural message is also played on the flight deck.

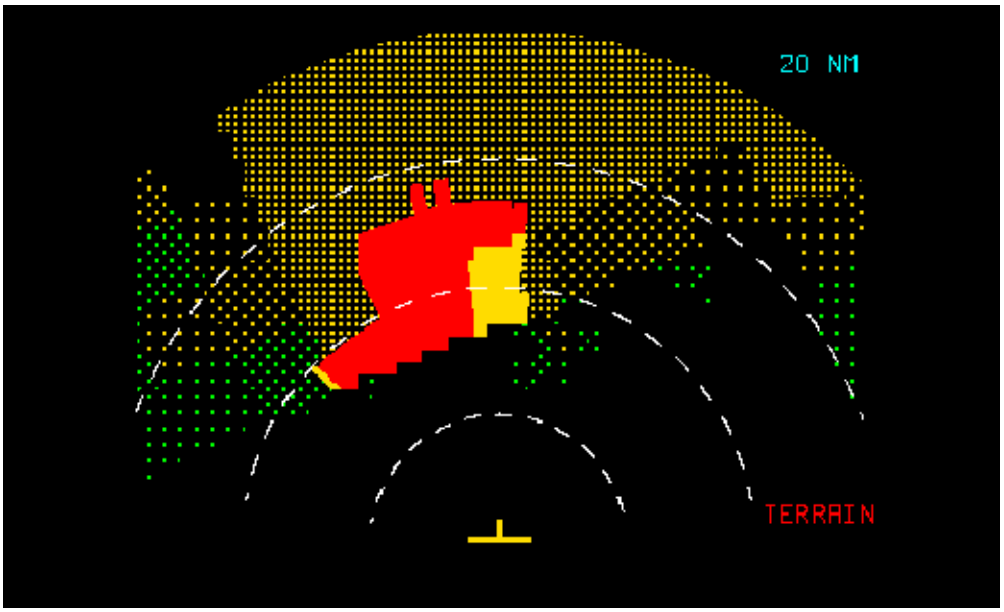

Figure 1-30. Terrain Hazard Display Upon A Pull-up Warning

In Figure 1-31, the warning alarm is generated through the TAWS display by highlighting the hazardous area ahead of the aircraft in red with black X’s and generating a red ”TERRAIN” message on the bottom right of the screen. An aural message is also played on the flight deck. The ”pull-up” maneuver will not allow for a safe clearance with terrain, and the crew has to immediately initiate an appropriate vertical and/or turning escape maneuver in order to avoid a CFIT accident.

Use or disclosure of information on this page is subject to the restrictions in the proprietary notice of this document.

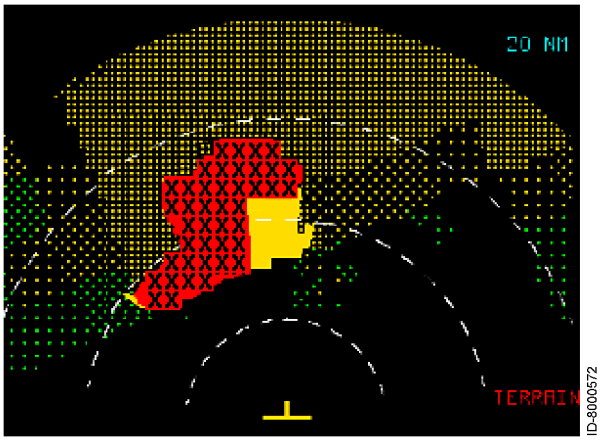

Figure 1-31. Terrain Hazard Display Upon An Avoid Terrain Warning

(4) TAWS/RWS Aural Messages

Aural alerts can be generated for any of the cautions or warnings generated by the TAWS and RWS functions. The specific messages are selectable from a list of several options. Additionally, the T2CAS can be configured to play the voices in either a male voice or a female voice. The list of selectable aural alerts is shown in Table 1-13.

Table 1-13. TAWS/RWS Aural Alerts

Condition	Selectable Aural Alerts
CPA Caution	“Terrain Ahead” or “Terrain Caution”
CPA Warning - Pull up	“Terrain Ahead, Pull Up” or “Terrain, Terrain, Pull Up, Pull Up” or Whoop Whoop, “Pull Up”
CPA Warning - Avoid Terrain	“Avoid Terrain”
Mode 1 Caution	Whoop Whoop, “Pull Up” or “Pull Up, Pull Up”
Mode 1 Warning	Whoop, Whoop, “Pull Up” or “Pull Up, Pull Up”

Use or disclosure of information on this page is subject to the restrictions in the proprietary notice of this document.

Table 1-13. TAWS/RWS Aural Alerts(cont)

Condition	Selectable Aural Alerts
Mode 2 Caution	“Terrain, Terrain”
Mode 2 Warning	Whoop Whoop “Pull Up” or “Pull Up, Pull Up”
Mode 3 Caution	“Don’t Sink, Don’t Sink”
Mode 4 Caution	“Too Low Terrain” or “Too Low Flaps” or “Too Low Gear”
Mode 5 Caution	“Glideslope”
Bank Angle Alert	“Bank Angle, Bank Angle”
Windshear Caution	Nothing or “Caution Windshear”

Use or disclosure of information on this page is subject to the restrictions in the proprietary notice of this document.

Table 1-13. TAWS/RWS Aural Alerts(cont)

Condition	Selectable Aural Alerts
Windshear Warning	“Windshear Windshear Windshear” or siren “Windshear Windshear Windshear”
Callouts	“Minimums Minimums” “Minimums” “Decision Height” “Unknown Decision Height” “Approaching Minimums” “Approaching Decision Height” “One thousand” “Five Hundred” 500 ft. tone “Four Hundred” “Three Hundred” “Two Hundred” “One Hundred” 100 ft tone “Eighty” “Sixty” “Fifty” “Forty” “Thirty Five” 35 ft. tone “Thirty” “Twenty” 20 ft. tone “Ten”

Use or disclosure of information on this page is subject to the restrictions in the proprietary notice of this document.

(5) Operating Procedures

Basic TAWS/RWS operating procedures on the ground include pre-flight test, TAWS/RWS activation before takeoff, and TAWS/RWS deactivation after landing. In-flight procedures are contained in the pilot's manual.

(a) Pre-Flight Test

The Standard Self Test is performed by activating either the CMC self test or the self test discrete input (RTP-10E = GND). The Standard Self Test can occur while on the ground or while in the airborne state.

Upon activating the Standard Self Test the following will occur:

The Standard Self Test will not be initiated if a TAWS alert is present when either the CMC self test or the self test discrete input is activated.

If the T2CAS unit has the windshear function enabled, the following aural annunciation will occur:

"TERRAIN AWARENESS AND WINDSHEAR TEST START"

If the T2CAS unit does not have the windshear function enabled, the following aural annunciation will occur:

"TERRAIN AWARENESS TEST START"

During the Standard Self Test the following will occur:

All discrete outputs implemented within a specific aircraft installation will be tested for over current and output voltage levels by activating the output for 1.5 seconds (±100 milliseconds), then deactivating the output for 1.5 seconds (±100 milliseconds), and then re-activating the output for 1.5 seconds (±100 milliseconds). Any faults found will be recorded in the T2CAS unit's non-volatile memory.

The T2CAS unit will verify the following functional areas in accordance with Figure 1-32.

- Aircraft Personality Module (APM)
- Terrain Database CRC
- External System Inputs
- Internal TAWS Parameters
- Internal GPS Parameters (if installed)

Use or disclosure of information on this page is subject to the restrictions in the proprietary notice of this document.

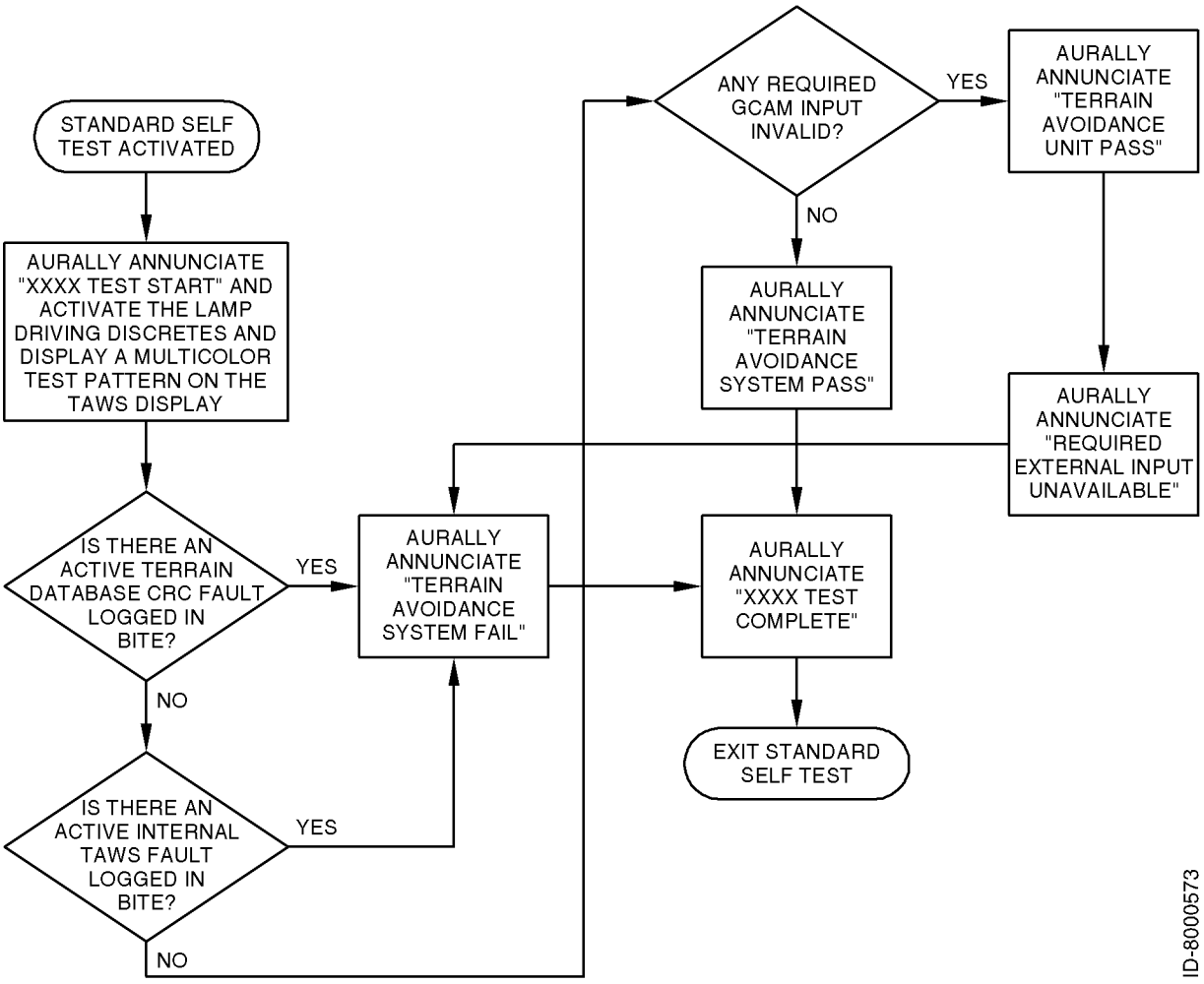

Figure 1-32. Standard Self-Test of TAWS/Windshear Functional Areas

Use or disclosure of information on this page is subject to the restrictions in the proprietary notice of this document.

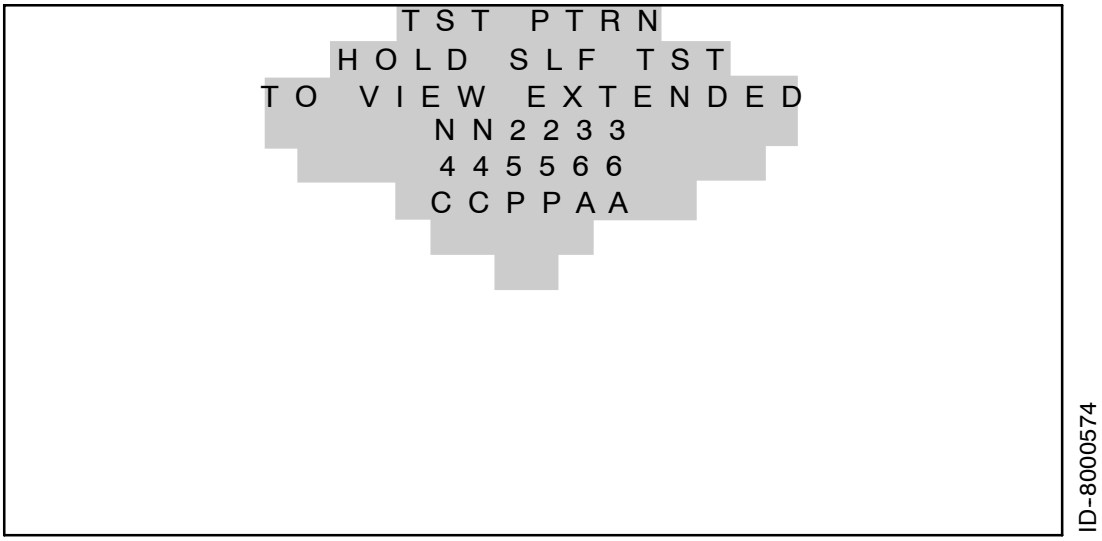

Figure 1-33. TAWS Display Test Pattern

The T2CAS unit will display a multicolor test pattern on both the captain's and first officer's TAWS displays. Figure 1-33 shows a typical multicolor test pattern.

NOTE: Each number in Figure 1-33 represents a texture terrain image slice (2 through 6) as well as the Pull Up area texture (P), avoid terrain area texture (A), and caution area texture (C) as defined in the ASDB SRS, Airplane Personality Module. Slice 1 is black in color therefore it is camouflaged into the background

The T2CAS unit will interrupt the Standard Self Test when any of the following alerts occur:

- "WINDSHEAR, WINDSHEAR, WINDSHEAR"
- "TERRAIN AHEAD, PULL UP"
- "TERRAIN TERRAIN, PULL UP PULL UP"
- "≈≈ PULL UP"
- "TERRAIN AHEAD"
- "TERRAIN CAUTION"
- "AVOID TERRAIN"
- "PULL UP, PULL UP"
- "TERRAIN, TERRAIN"
- "SINK RATE, SINK RATE"

Use or disclosure of information on this page is subject to the restrictions in the proprietary notice of this document.

- “DON’T SINK, DON’T SINK”
- “TOO LOW, TERRAIN”
- “TOO LOW, GEAR”
- “TOO LOW, FLAPS”
- “GLIDESLOPE”

NOTE: “≈≈” designates a pair of varying tones from 400 to 800 Hz; where each tone is 0.3 seconds in duration, separated by 0.1 seconds, and at the end of the pair there is 0.1 seconds of silence.

NOTE: The aural annunciations listed above will depend on the Operator Selectable Options chosen during installation of the T2CAS unit.

Upon completion of the Standard Self Test the following will occur:

If the T2CAS unit has the windshear function enabled and the APM and Terrain Database and Internal system and Internal GPS self tests have passed, the following aural annunciation will occur:

”TERRAIN AWARENESS AND WINDSHEAR TEST PASSED”

If the T2CAS unit does not have the windshear function enabled and the APM and Terrain Database and Internal system and Internal GPS self tests have passed, the following aural annunciation will occur:

”TERRAIN AWARENESS TEST PASSED”

If the T2CAS unit does not have the windshear function enabled and the APM or Terrain Database or Internal system or Internal GPS self tests have failed, the following aural annunciation will occur:

”TERRAIN AWARENESS AND WINDSHEAR TEST COMPLETE”

If the T2CAS unit does not have the windshear function enabled and the APM or Terrain Database or Internal system or Internal GPS self tests have failed, the following aural annunciation will occur:

”TERRAIN AWARENESS TEST COMPLETE”

This information is summarized in the Table 1–14.

Table 1–14. Aural Annunciation

	Terrain Awareness and Windshear Test Passed	Terrain Awareness and Windshear Test Complete	Terrain Awareness Test Passed	Terrain Awareness Test Complete
Windshear Enabled?	YES	YES	NO	NO
APM or Terrain Database or Internal System or Internal GPS Fail?	NO	YES	NO	YES

Use or disclosure of information on this page is subject to the restrictions in the proprietary notice of this document.

(b) TAWS/RWS Mode Activation

The TAWS/RWS is activated upon Aircraft Power Up and becomes available when parameters needed for normal operation of the TAWS/RWS functions are available.

(c) TAWS/RWS Mode Deactivation

The TAWS/RWS becomes deactivated upon Aircraft Power Down. Specific TAWS/RWS functions can become unavailable if an Internal or External parameter needed for normal operation of the TAWS/RWS functions are unavailable or invalid.

The TAWS Predictive CPA Modes may become deactivated upon the selection of the “Terrain Inhibit” switch. The purpose of the “Terrain Inhibit” switch is to allow the aircraft to operate without nuisance or unwanted warnings at airports that are not in the system database. Additionally, there may be some “VFR only” airports where unique terrain features are in close proximity to the runway. The “Terrain Inhibit” switch should NOT be engaged for normal operations.

Use or disclosure of information on this page is subject to the restrictions in the proprietary notice of this document.

Blank Page

Use or disclosure of information on this page is subject to the restrictions in the proprietary notice of this document.

MECHANICAL INSTALLATION

1. General

This section contains information on how and where to mount each component of the T2CAS system. For new installations, plan installation in two stages. First, determine the location of the LRUs in the aircraft. Next, determine the length of RF and electrical interconnections for selected locations.

NOTE: The RT-95X CFDS/CMC capability has not been demonstrated as part of an installed system. The CFDS/CMC capability must be demonstrated on the aircraft to the appropriate certification authorities before the CFDS/CMC functionality may be used.

2. Equipment and Materials

For new T2CAS installations, refer to Table 1-1 for RCZ-852 Transponder Installation Kit information and Table 1-2 for mounting tray information. For all other components, refer to the applicable Outline and Installation drawing in this section for mounting information. The Outline and Installation drawings show connector and connector contact pin/socket part number information, where applicable.

3. Mechanical Installation Design

NOTE: To assure proper grounding of the T2CAS system, the aircraft surface to which all mountings or units are attached must be clean bare metal. Mount to the airframe with a resistance of 5 milliohms or less.

A. TT-950/951/952 T2CAS Computer Unit Provisions

Mechanical installation data for the TT- 950/952 T2CAS Computer Unit (6-MCU) is shown in Figure 2-6. Data for the TT-951 T2CAS Computer Unit (4-MCU) is shown in Figure 2-7.

The computer unit can be mounted in any convenient location in the aircraft; however, it must be located so as to maintain an antenna coaxial cable insertion loss of 2.5 ± 0.5 dB in accordance with DO-185. This is approximately within 50 feet of the antenna unless low loss coaxial cable is used. Top and bottom coaxial delay timing differences can be compensated for by use of the antenna delay program pins.

Use or disclosure of information on this page is subject to the restrictions in the proprietary notice of this document.

The TT-950/952 T2CAS Computer Unit is mounted in an ARINC 600 6-MCU mounting tray. The computer unit requires external cooling air in accordance with ARINC 600 or ARINC 404 to maintain the highest possible Mean Time Between Failures (MTBF). In those installations where this is not available, a mounting tray with an integral fan is required.

The TT-951 T2CAS computer unit is mounted in an ARINC 600 4-MCU mounting tray. This unit contains an internal temperature controlled fan, so it does not require any external cooling.

The T2CAS computer tray connector is RADIALL part number NSXN3P357X0001 (other Brands are available, but the RADIALL is preferred). This tray connector does not come with contacts so approximately 150 each RADIALL part number 620-200, 22 gauge pins will be needed as well.

The required contacts for the LBP insert depend on if the computer is to be powered with +28 Vdc or 115 Vac and if a 115 Vac cooling fan will be connected when the computer is powered with 115 Vac. Note that there is no output pins to support a +28 Vdc cooling fan.

B. Airplane Personality Module Provisions

Reference Figure 2-5 for the mechanical installations of the ACSS T2CAS APM. The APM can be mounted to existing aircraft structure or can be mounted to the ACSS APM mounting bracket that is secured to the aft side of the T2CAS computer tray connector, reference Figure 2-5 (Sheet 2). If the Customer specifies the ACSS APM mounting bracket, an APM bracket sub kit will be provided for the Customer's T2CAS installations.

C. Antenna Provisions

The T2CAS TCAS top directional antenna should, ideally, be the most forward antenna on the top of the aircraft and should be located as close to the longitudinal centerline as possible. See Figure 2-10. A 5-degree tilt angle is allowed laterally, with 2-degree positive and 5-degree negative tilt angles allowed longitudinally. See Figure 2-11.

If a bottom directional antenna is used, it should also be the most forward antenna on the fuselage bottom. Tilt angle allowances are the same as on the top antenna. A bottom omnidirectional antenna need not be the most forward antenna, but it should be separated by at least 20-inches from any other L-band antenna.

Since the bottom antenna may be either a directional (standard) or an omnidirectional (optional) antenna, dual notation is shown in the wiring diagram. Only one coax cable is needed for an omnidirectional antenna installation.

(1) Directional Antenna Installation

The top directional antenna mounting and installation data is given in Figure 2-12. Figure 2-12 contains the maximum radius dimensions for the various curved antenna base part number units, the number of aircraft mounting holes and the length of the connector extension for the various part number units. The antenna must be electrically bonded (less than 5.0 milliohms bonding resistance) to the airframe to provide a ground plane for the antenna elements.

Use or disclosure of information on this page is subject to the restrictions in the proprietary notice of this document.

The directional antenna must be separated by a least 30-inches from any other L-band antenna, and 60-inches is preferred. If a bottom directional antenna is used, it should be the most forward antenna on the fuselage bottom with tilt angle allowances the same as for a top mounted antenna.

An O-ring (included with the directional antenna) is required to be installed between the directional antenna and the aircraft fuselage. The Navy Aeronautical Standard part number for the O-ring is NAS 1611-240. The ACSS part number for the O-ring is 4000171-240.

NOTE: For directional antennas, ACSS Part No. 7514060-90X, the customer must provide an adapter plate for mounting to the aircraft. The antenna base plate, to which the adapter must mate, is detailed in Figure 2-12. Directional antennas, ACSS Part No. 7514081-9XX, come with a preinstalled adapter plate.

(2) Omnidirectional Antenna Installation

The bottom omnidirectional antenna is a standard ATC type antenna. It should be qualified to TSO C119b and be DC grounded per MIL-A-90941, B-5087B. All L-band antennas must be separated by at least 20-inches. Only one coax cable is required for installation.

The omnidirectional antenna is not supplied by ACSS. To install, follow the manufacturer's installation instructions.

D. GPS Antenna and Coax Provisions

Reference Figure 2-4 for the mechanical installations of the ACSS GPS Antenna. The GPS installation design will consist of an A429 interface to the GPS sensor if the signal is available, otherwise the T2CAS internal GPS module will be required. The installation then consists of the installation of a GPS antenna and the coax cable to the T2CAS unit, LBP pin 13.

Where the internal module is required, the T2CAS GPS Installation Data Package includes the GPS antenna mounting structures provisions and all of the coax details to secure the coax to the airframe and connect the T2CAS GPS antenna with the T2CAS computer's LBP pin 13.

The minimum combined coax and connector insertion loss between the GPS antenna's output and the T2CAS computer's GPS input port is equal to the maximum preamplifier gain minus 29 dB. The maximum coax loss between the GPS antenna's output and the T2CAS computer's GPS input port is equal to the minimum preamplifier gain minus 12.5 dB.

Use or disclosure of information on this page is subject to the restrictions in the proprietary notice of this document.

This is summarized with several examples in the Table 2-1 below, assuming 4 unique installations.

Table 2-1. Coax Cable/Connector Loss

Assumed Antenna Gain (dB)	Minimum Cable And Connector Loss(dB)	Maximum Cable And Connector Loss(dB)	Cable Length (feet)	Recommended Cable Type (and loss)	(Cable Length (feet)x Loss) + Connector Loss= Cable and Connector Loss
30	30 - 29 = 1	30 - 12.5 = 16.5	10	311601 (0.11 db/ft)	(0.11 * 10) + 1 = 2.1
30	30 - 29 = 1	30 - 12.5 = 16.5	100	311601 (0.11 db/ft)	(0.11 * 100) + 1 = 12
26	26 < 29 => 0	26 - 12.5 = 13.5	10	311601 (0.11 db/ft)	(0.11 * 10) + 1 = 2.1
26	26 < 29 => 0	26 - 12.5 = 13.5	100	311601 (0.11 db/ft)	(0.11 * 100) + 1 = 12

In the above examples, the antenna gain and assumed losses effectively stay within the desired minimum and maximum ranges.

High-quality coaxial cables should be used because a mismatch in impedance, possible with lower quality cables, produces reflections in the cable that increase signal loss. Losses due to cable mismatch should be considered in the maximum cable loss budget.

The coax must meet FAR part 25 specifications for environmental conditions.

Recommended antenna mounting location

(1) The GPS antenna should be installed close to aircraft centerline with minimum deviation from the aircraft level horizontal position. The antenna location is on the top side, front half of the aircraft fuselage to minimize the shadowing effect of the vertical stabilizer and wings.

(2) The GPS antenna should be installed at least 39 inches (1 meter) away from any other non L-band or L-band except as mentioned below.

(3) If a SATCOM transmitting antenna is installed, the GPS antenna should be located a minimum of 160 inches (4.064 meters) away.

(4) For a dual GPS antennae installation, the separation should be a minimum of 12 inches.

(5) If a TCAS or VHF communication transmitting/receiving antenna is installed, the GPS antenna should be located a minimum of 48 inches (1.219 meters) away.

Use or disclosure of information on this page is subject to the restrictions in the proprietary notice of this document.

E. TCAS Control Panel Provisions

Mechanical installation data for a typical Gables GXXXX Series ATC/TCAS control panel is shown in Figure 2-14.

It should be noted that various other types of controllers (Radio Management Units or EFIS Display Controllers) can be used to control the TCAS display. If a controller other than a ACSS ATC/TCAS control panel is used, refer to that particular unit's manual for installation data.

F. TAWS/RWS Control Panel Provisions

The TAWS controls can be mounted on a single control panel or they can be discrete switches individually mounted at a convenient location in the Flight Deck. The TAWS controls may be part of the electronic display menu selection in installations where TAWS information is displayed on an EFIS or electronic display.

Figure 2-1 shows the ACSS King Air C90 TAWS control panel/glareshield switch annunciator installation design. The TERR and WXR select switches shown are momentary but alternate action switches are also supported. The terrain INHIBIT or OVRD switches are alternate action switches and are typically gaurded.

The T2CAS TAWS control/annunciator installation design will vary depending on the Flight deck configuration and available space.

G. VSI/TRA Provisions

Mechanical installation data for the VSI/TRA display is shown in Figure 2-15. The VSI/TRA is usually used as a direct replacement for the existing 3-ATI form VSI indicator currently mounted in the Flight Deck. Replacement of the installation clamp may be necessary if the previous clamp is less than 2-inches deep. Some older aircraft clamps do not provide sufficient mechanical support.

If a Thales VSI/TRA is used as the TCAS display source, and an Air Data Computer is not available to provide vertical speed signals to the display, a static line can be run directly into the Thales VSI/TRA from a static pneumatic input.

H. TAWS Terrain Hazard Display Provisions

ARINC 708A and ARINC 429 WXR display and EFIS interfaces are supported. T2CAS' dual-independent terrain hazard display I/O supports dual ARINC 708A and dual ARINC 429 terrain hazard display systems. Figure 2-2 shows TAWS Dual Terrain hazard display annunciator switch panels and locations that have been used on B757, B767, and B737-300/400/500 aircraft. Figure 2-3 shows a typical single terrain hazard display annunciator switch panel.

Use or disclosure of information on this page is subject to the restrictions in the proprietary notice of this document.

CAPTAIN'S AND FIRST OFFICER'S GLARESHIELD SWITCH ANNUNCIATORS. (ANNUNCIATOR TEST ON)

CAPTAIN'S AND FIRST OFFICER'S GLARESHIELD SWITCH ANNUNCIATORS. (NORMAL FLIGHT CONDITION)

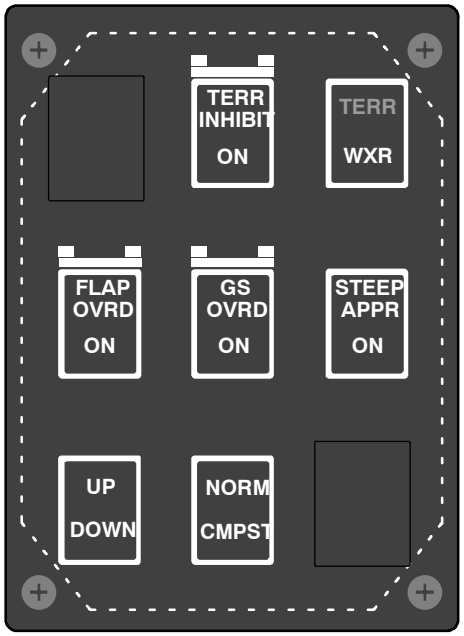

ANNUNCIATOR TEST ON. (WHITE DASHES ARE HIDDEN LINES SHOWING EXISTING 3 ATI CUTOUT)

ID-8000576

Figure 2-1. ACSS King Air C90 TAWS Control Panel/Glareshield Switch Annunciators

Use or disclosure of information on this page is subject to the restrictions in the proprietary notice of this document.

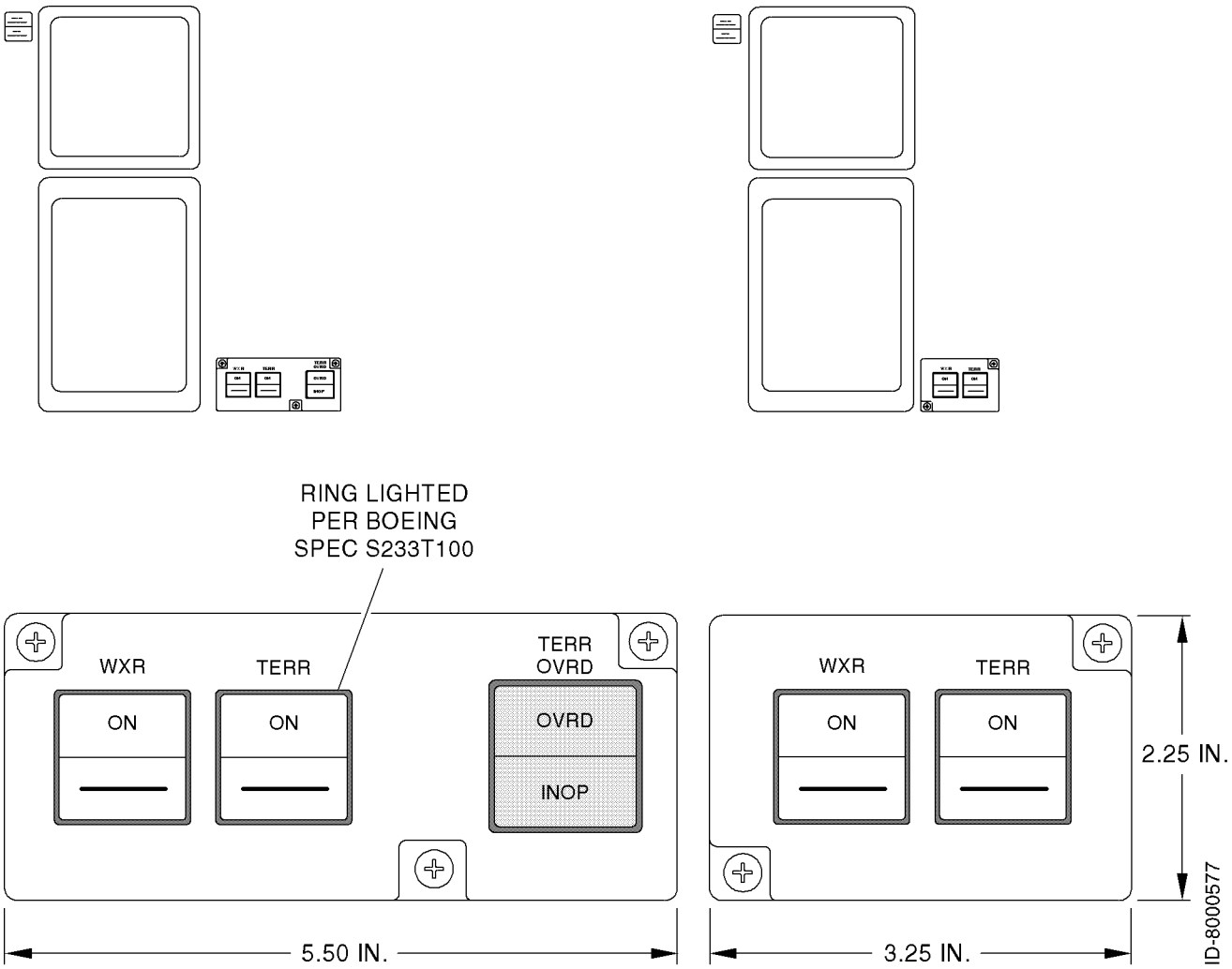

Figure 2-2. Typical Five-Button B737/757/767 Annunciator Switch Panels

Use or disclosure of information on this page is subject to the restrictions in the proprietary notice of this document.

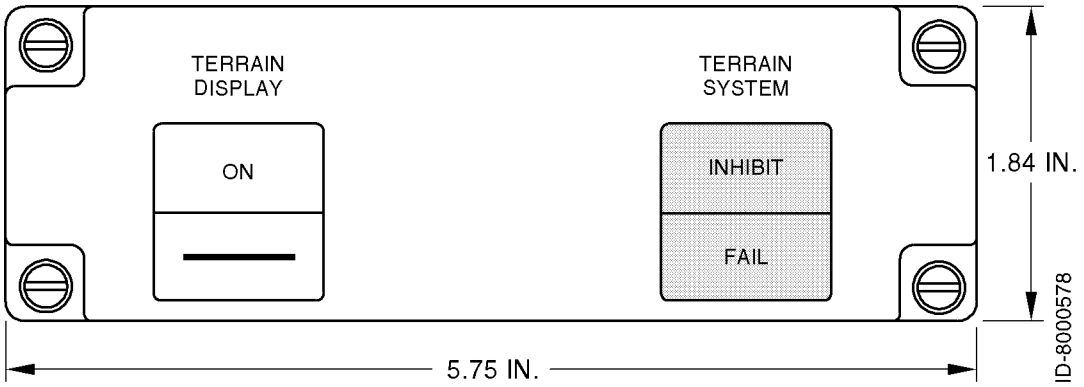

Figure 2-3. Typical Single Terrain Hazard Display Annunciator Switch Panel

I. Transponder Provisions

This paragraph contains the mechanical installation data for the ACSS Mode S Data Link Transponder, Part No. 7517800-XXYYY and ACSS Diversity Mode S Transponder, Part No. 7510700-850. It also contains provisions for installing the ATC transponder antennas.

(1) Mode S Data Link Transponder Provisions

Mechanical installation data for the ACSS Mode S Data Link Transponder, Part No. 7517800-XXYYY is shown in Figure 2-8. The transponder can be mounted in any convenient location in the aircraft; however, it should be mounted within 30 feet of the antennas unless low loss coaxial cable is used to maintain a worst case loss of 3dB per ARINC 718. Top and bottom antenna coaxial run length differences can be compensated for by use of the antenna delay program pins on the transponder. The unit can utilize external cooling air in accordance with ARINC 600 or ARINC 404 or operate in convection-cooled environments. The transponder is mounted in an ARINC 600 4-MCU tray assembly.

(2) Diversity Mode S Transponder Provisions

Mechanical installation data for the ACSS RCZ-852 Diversity Mode S Transponder, Part No. 7510700-850 is shown in Figure 2-9. The transponder can be mounted in any convenient location in the aircraft that allows the unit to be upright during normal flight. The exact location should allow the cabling between the unit, control panel, and antennas to be as short as possible. The location of the mounting tray (part of installation kit, Part No. 7510707-968) should allow adequate space for installation of the transponder, provide reasonable accessibility for servicing, and allow space on top, sides, and rear of unit for adequate ventilation. The location must also provide a solid mechanical mount to prevent vibration amplification. The mounting tray should be electrically bonded to the aircraft frame by a low resistance path of less than 2.5 milliOhms.

Use or disclosure of information on this page is subject to the restrictions in the proprietary notice of this document.

(3) ATC Transponder Antenna Provisions

When installing transponder antennas, a TSO'd antenna should be selected. The antenna must be vertically polarized and operate in the frequency range of 960 to 1220 MHz. Antenna impedance must be 50 ohms. Selection of a grounded or lightning protected type antenna is required to pass the transponder bite continuity detection circuitry, if enabled.

In dual transponder antenna installations it is important to provide adequate isolation from each other to prevent receiver front-end damage. A 20-inch minimum separation of Mode S antennas from other L-Band antennas, including TCAS antennas, must be maintained. The maximum cable length for RG-214/U is 30 feet (9.144 meters). Allow adequate cable length so bends in cable have a minimum 3-inch (76 mm) radius. Selection of coax cable assemblies with moisture barrier protection is highly recommended to minimize the effects of humidity and corrosion.

When ATC antennas are installed, the mounting area must provide a solid mechanical base for the antenna as well as clearance for the connector. A doubler plate is usually required when the antenna is mounted on an unsupported large fuselage area. Never weaken aircraft structure for the sake of a good location. Refer to the aircraft manufacturer's specifications; reinforcements for antennas are often built into the aircraft structure.

Doubler plates or shims, if used, must be metallic and shaped to interface the antenna base with the contour of the aircraft fuselage. ATC antennas are not supplied by ACSS. All antenna installations should be in accordance with manufacturer installation instructions.

A weather sealant should be applied around the periphery of the antenna base to prevent seepage of water and condensation and preclude corrosion. If a sealant or aerodynamic smoother is used, it should be applied after the antenna has been bolted down.

Use or disclosure of information on this page is subject to the restrictions in the proprietary notice of this document.

Blank Page

Use or disclosure of information on this page is subject to the restrictions in the proprietary notice of this document.

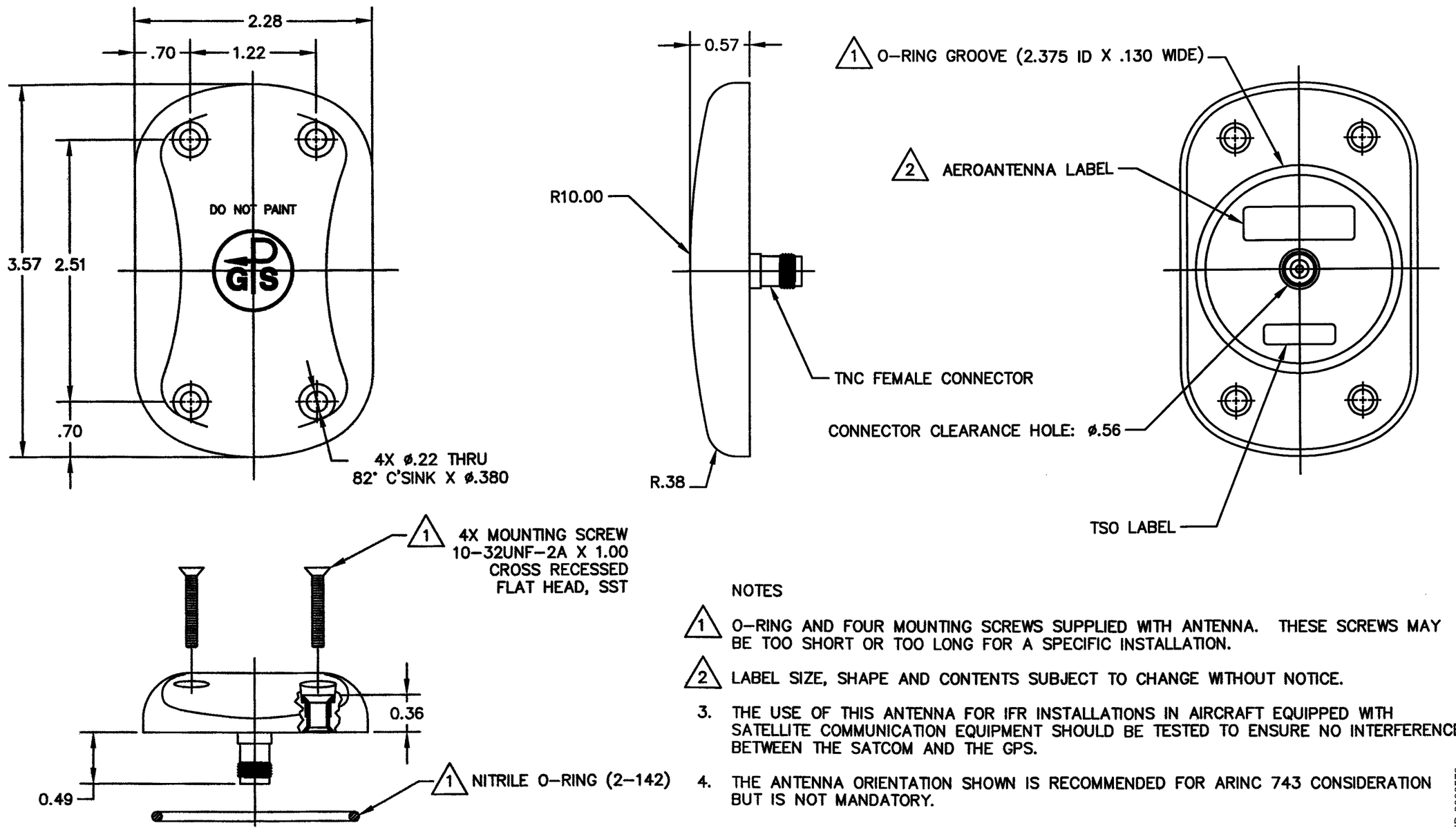

NOTES

1. O-RING AND FOUR MOUNTING SCREWS SUPPLIED WITH ANTENNA. THESE SCREWS MAY BE TOO SHORT OR TOO LONG FOR A SPECIFIC INSTALLATION.
2. LABEL SIZE, SHAPE AND CONTENTS SUBJECT TO CHANGE WITHOUT NOTICE.
3. THE USE OF THIS ANTENNA FOR IFR INSTALLATIONS IN AIRCRAFT EQUIPPED WITH SATELLITE COMMUNICATION EQUIPMENT SHOULD BE TESTED TO ENSURE NO INTERFERENCE BETWEEN THE SATCOM AND THE GPS.
4. THE ANTENNA ORIENTATION SHOWN IS RECOMMENDED FOR ARINC 743 CONSIDERATION BUT IS NOT MANDATORY.

Figure 2-4. GPS Antenna Outline and Installation Drawing

Use or disclosure of information on this page is subject to the restrictions in the proprietary notice of this document.

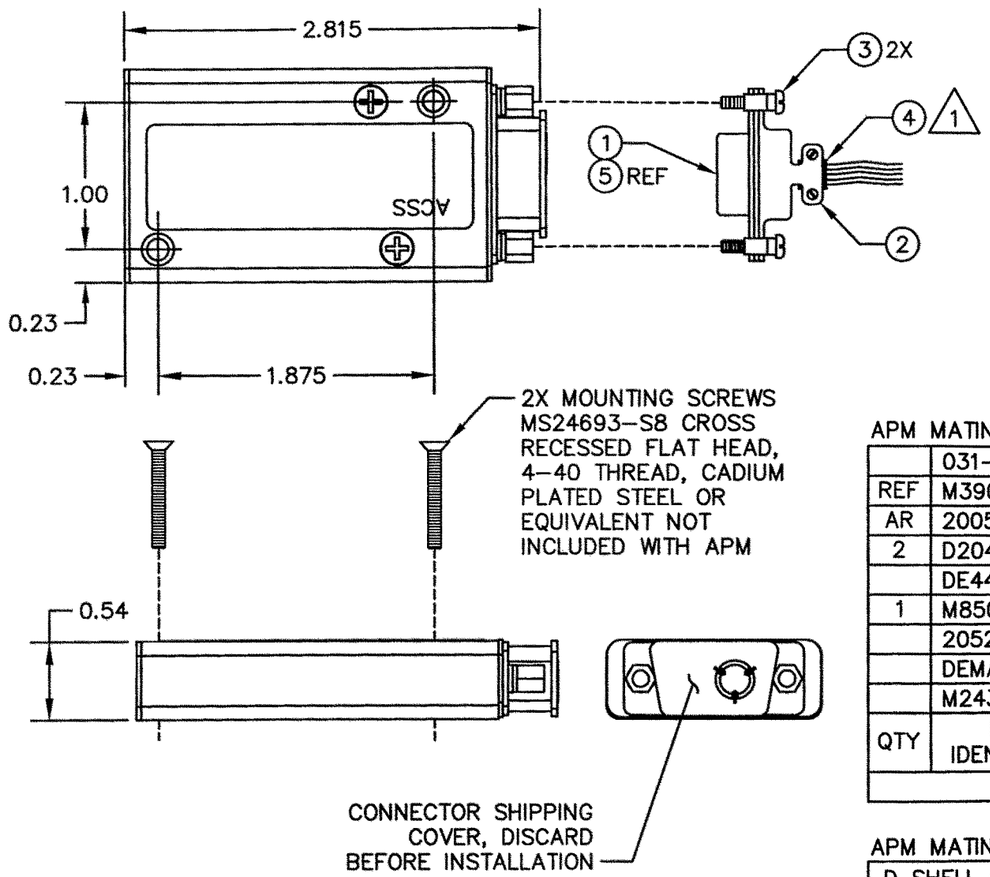

APM MATING CONNECTOR PARTS NOT INCLUDED WITH APM:

QTY	PART OR IDENTIFYING NO.	NOMENCLATURE OR DESCRIPTION	MATERIAL SPECIFICATION OR VENDOR	ITEM NO.
	031-1007-042	ALTERNATE	ITT CANNON	
REF	M39029/63-368	CONTACT, SOCKET, D SHELL CONNECTOR	M39029	5
AR	2005036-R-BK	BLACK 1/2 INCH WIDE SELF-FUSING TAPE	MIL SPEC A-A-59163 TYPE II	4
2	D20419-18	SCREW, D SHELL, LOCKING, MALE	ITT CANNON	3
	DE44994	ALTERNATE	ITT CANNON	
1	M85049/48-2-1	BACKSHELL, D SHELL CONNECTOR	M85049	2
	205203-3	ALTERNATE	AMP	
	DEMA9S	ALTERNATE	ITT CANNON	
	M24308/2-1	CONNECTOR, D SHELL RECEPTACLE	M24308	1

PARTS LIST

APM MATING CONNECTOR CONTACT TERMINATION INFORMATION:

D SHELL CONTACTS, REAR RELEASE

CONTACT SIZE/TYPE	SOCKET MIL PART NUMBER	INSTALLATION REMOVAL TOOL	CRIMPING TOOL	POSITIONER	SELECTOR	WIRE AWG	WIRE STRIP LENGTH
20	M39029/63-368	M81969/1-02	M22520/2-01	M22520/2-08	4	22	.198±.010
22D	M39029/57-354	M81969/1-01	M22520/2-01	M22520/2-06	4	22	.198±.010

1 SECURE CONNECTOR BACKSHELL APPLYING A MINIMUM OF 3 WRAPS OF SELF-FUSING TAPE (ITEM 4) BETWEEN BACKSHELL AND CABLE. ADD ADDITIONAL WRAPS AS REQUIRED FOR PROPER FIT OF THE BACKSHELL.

ID-8000580

Figure 2-5 (Sheet 1). APM Outline and Installation Drawings

Use or disclosure of information on this page is subject to the restrictions in the proprietary notice of this document.

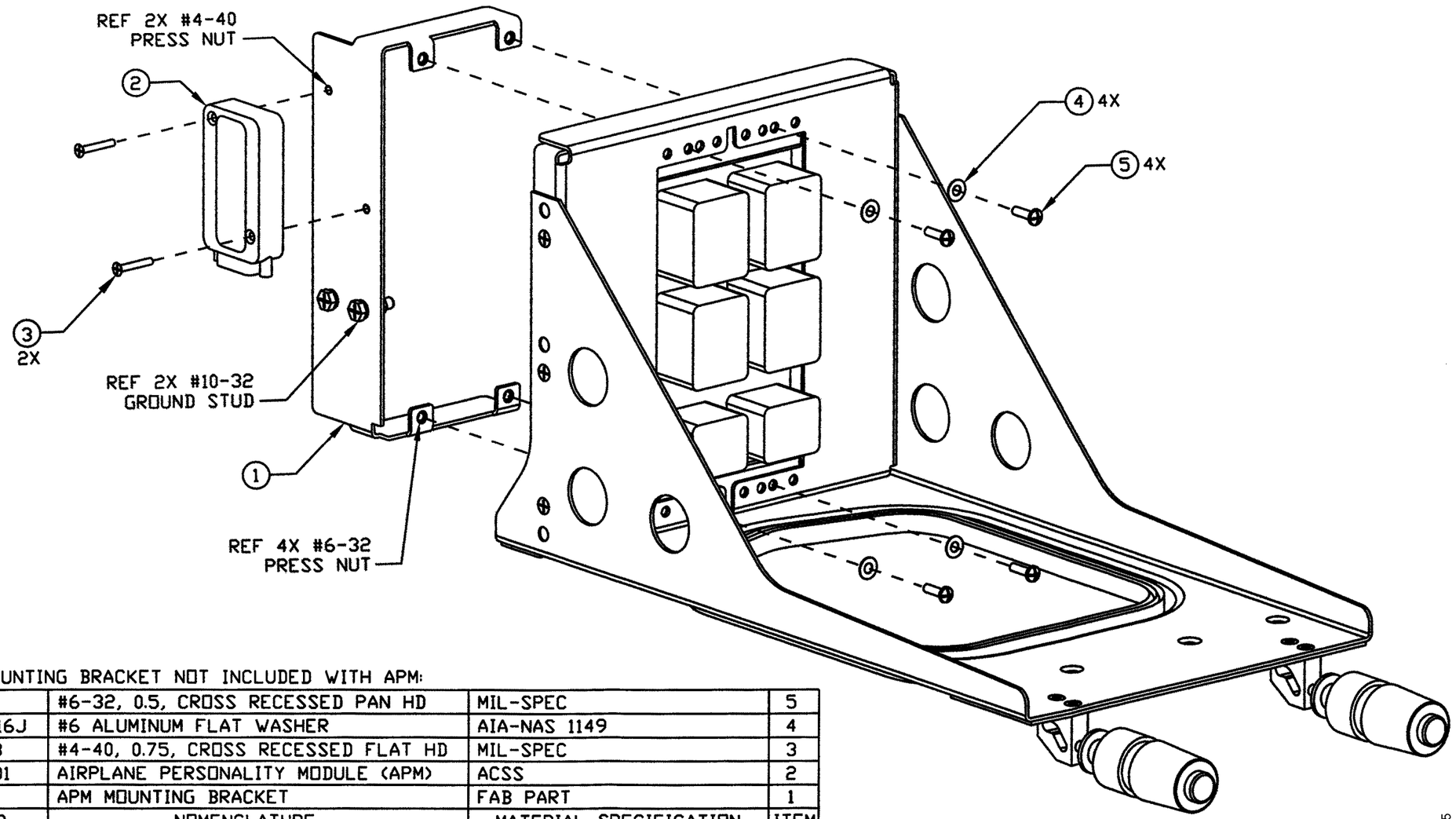

OPTIONAL APM MOUNTING BRACKET NOT INCLUDED WITH APM:

QTY	PART OR IDENTIFYING NO.	NOMENCLATURE OR DESCRIPTION	MATERIAL SPECIFICATION OR VENDOR	ITEM NO.
4	MS51957-30	#6-32, 0.5, CROSS RECESSED PAN HD	MIL-SPEC	5
4	NAS1149DN616J	#6 ALUMINUM FLAT WASHER	AIA-NAS 1149	4
2	MS24693-S8	#4-40, 0.75, CROSS RECESSED FLAT HD	MIL-SPEC	3
REF	9000001-10001	AIRPLANE PERSONALITY MODULE (APM)	ACSS	2
1	TBD	APM MOUNTING BRACKET	FAB PART	1

PARTS LIST

Figure 2-5 (Sheet 2). APM Outline and Installation Drawings

Use or disclosure of information on this page is subject to the restrictions in the proprietary notice of this document.

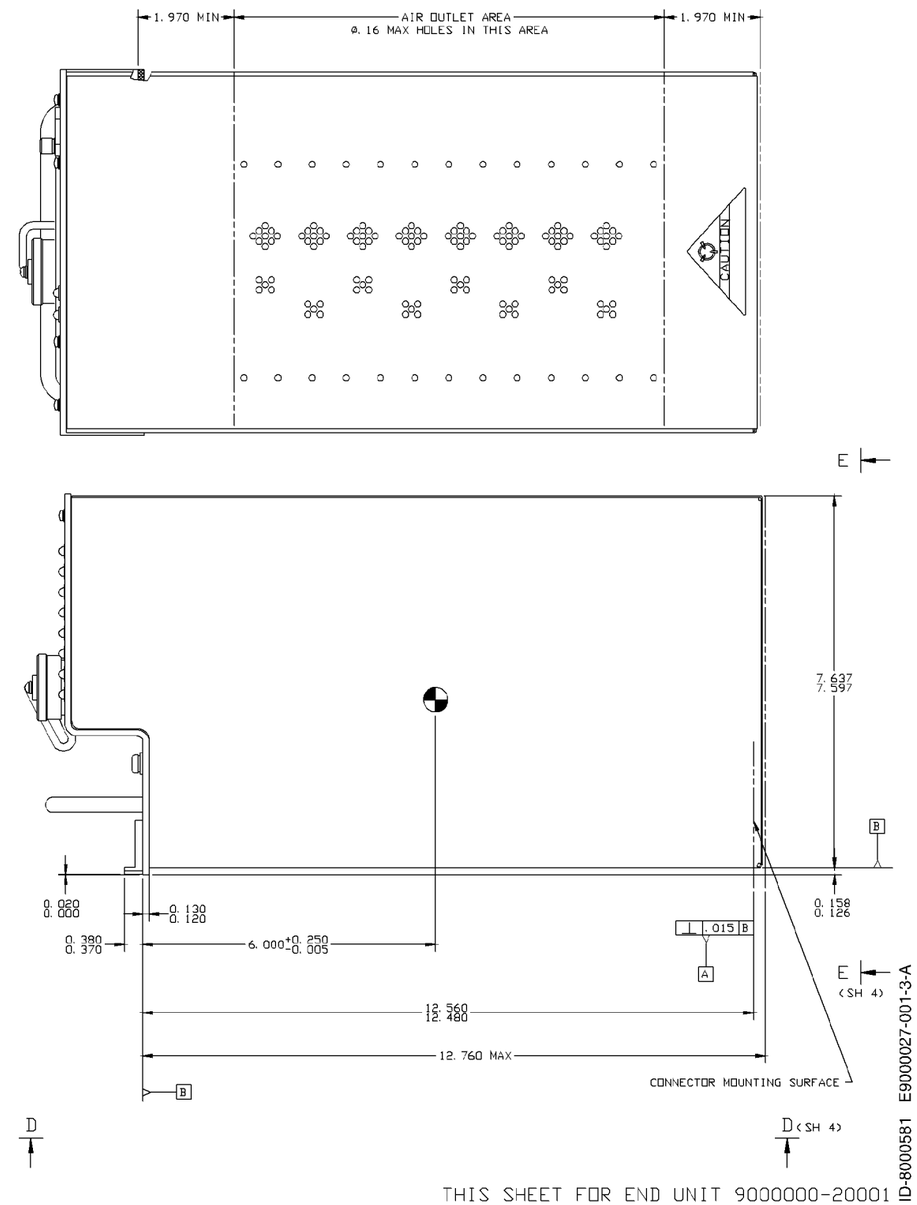

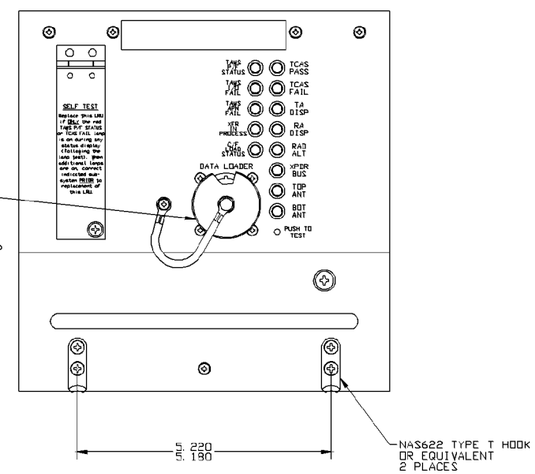

NOTES;

1. UNIT WEIGHT:
   UNIT PART NUMBER 9000000-20001 (28/115 VOLT UNIT) NOMINAL 17.40 POUNDS/MAXIMUM 17.86 POUNDS (7.89/8.10 KILOGRAMS).
2. ⊕ DENOTES APPROXIMATE CENTER OF GRAVITY.
3. DARKENED PORTION INDICATES SOLID PART OF POLARIZING KEYWAY.
4. THE INSTALLATION IS IN ACCORDANCE WITH ARINC 600 6 MCU.
5. DIMENSIONS ARE IN INCHES. SEE METRIC CONVERSION TABLE FOR CORRESPONDING DIMENSIONS IN MILLIMETERS.
6. THE UNIT MAY ACCEPT EITHER BLOW-THRU COOLING PER ARINC 600 OR DRAW-THRU COOLING PER ARINC 404. THE NORMAL OPERATION COOLING AIRFLOW REQUIREMENT PER ARINC 600 IS 485 POUNDS PER HOUR PER KILOWATTS (220 KILOGRAMS/HOUR-KILOWATTS). AT EITHER OF THE AIRFLOW RATES, THE PRESSURE DROP THROUGH THE UNIT IS .20±.12 INCHES OF WATER (5±3 MILLIMETERS OF WATER).
7. THIS DRAWING DEFINES END UNIT 9000000-YYTZZ.
   YY = HARDWARE CONFIGURATION FROM 10 THROUGH 99.
   T = TCAS SOFTWARE CONFIGURATION FROM 0 TO 9.
   ZZ = TAWS CONFIGURATION FROM 01 THROUGH 99.
8. UNIT FINISH: CHEM FILM TREATED OVER BARE ALUMINUM.
9. .10 MAX REAR PANEL THICKNESS IS REQUIRED IN CONNECTOR MOUNTING AREA DEFINED AS ZONE A. NO OTHER PROJECTIONS EXCEPT CONNECTOR MOUNTING HARDWARE ARE PERMITTED IN AREA DEFINED AS ZONE A.
10. TOTAL UNIT WATTAGE IS 113 MAX.

Figure 2-6 (Sheet 1). TT-950/952 T2CAS Computer Unit Outline and Installation Drawing

Use or disclosure of information on this page is subject to the restrictions in the proprietary notice of this document.

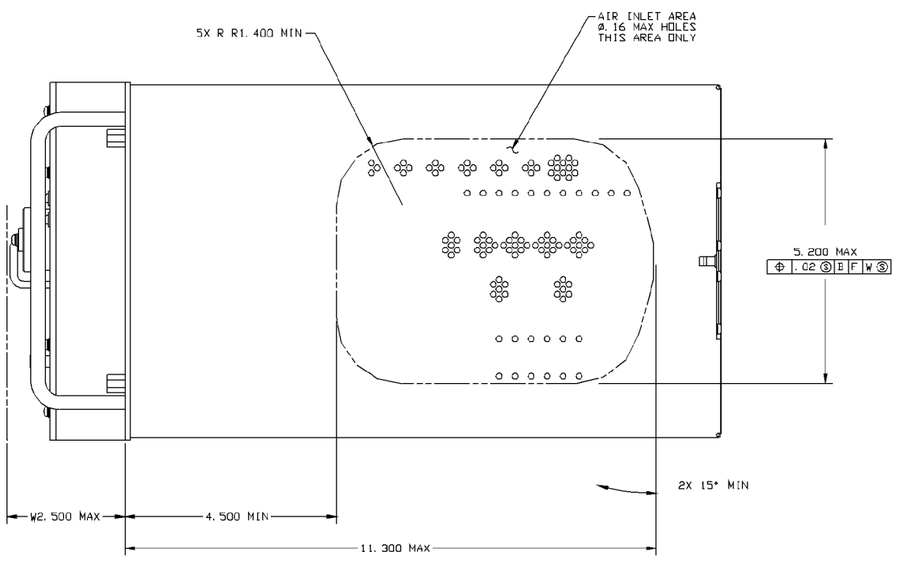

VIEW D-D

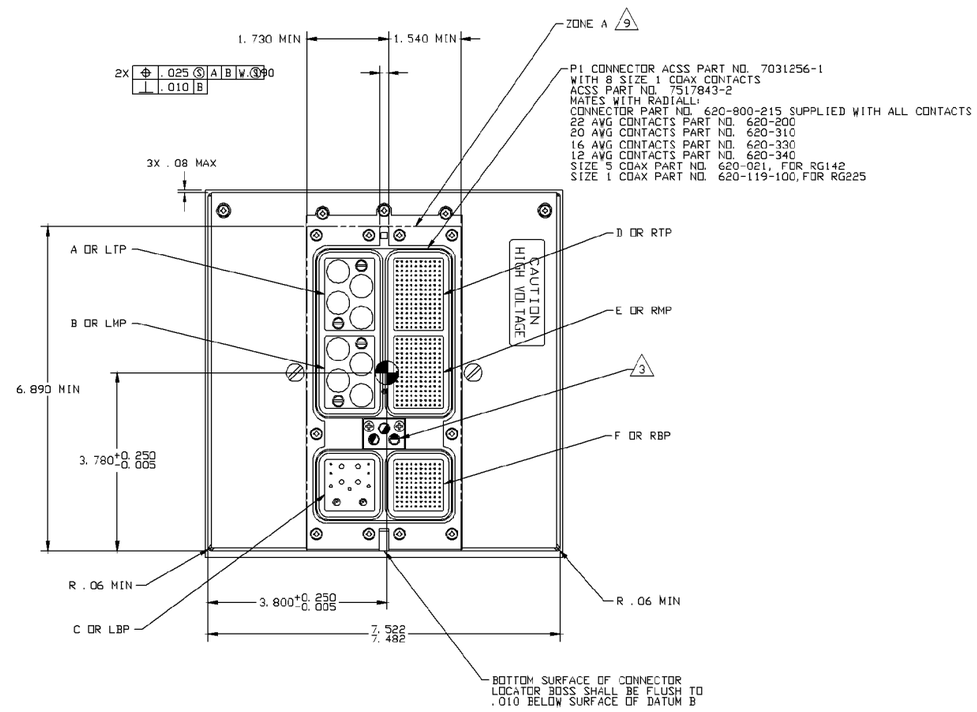

VIEW E-E

CONVERSION TABLE 5	
INCHES	MILLIMETERS
.010	.254
.015	.381
.020	.508
.025	.635
.04	1.02
.06	1.52
.08	2.03
.10	2.54
.12	3.05
.126	3.200
.13	3.30
.158	4.013
.16	4.06
.20	5.08
.25	6.35
.37	9.40
.38	9.65
1.40	35.56
1.54	39.12
1.73	43.94
1.97	50.04
2.50	63.50
3.78	96.01
3.80	96.52
4.50	114.30
5.18	131.57
5.22	132.59
6.00	152.40
6.89	175.01
7.48	189.99
7.52	191.01
7.60	193.04
7.64	194.06
11.30	287.02
12.48	316.99
12.56	319.02
12.76	324.10

THIS SHEET IS FOR END UNIT 9000000-20001

ID-8000582 E9000027-001-4-A

Figure 2-6 (Sheet 2). TT-950/952 T²CAS Computer Unit Outline and Installation Drawing

Use or disclosure of information on this page is subject to the restrictions in the proprietary notice of this document.

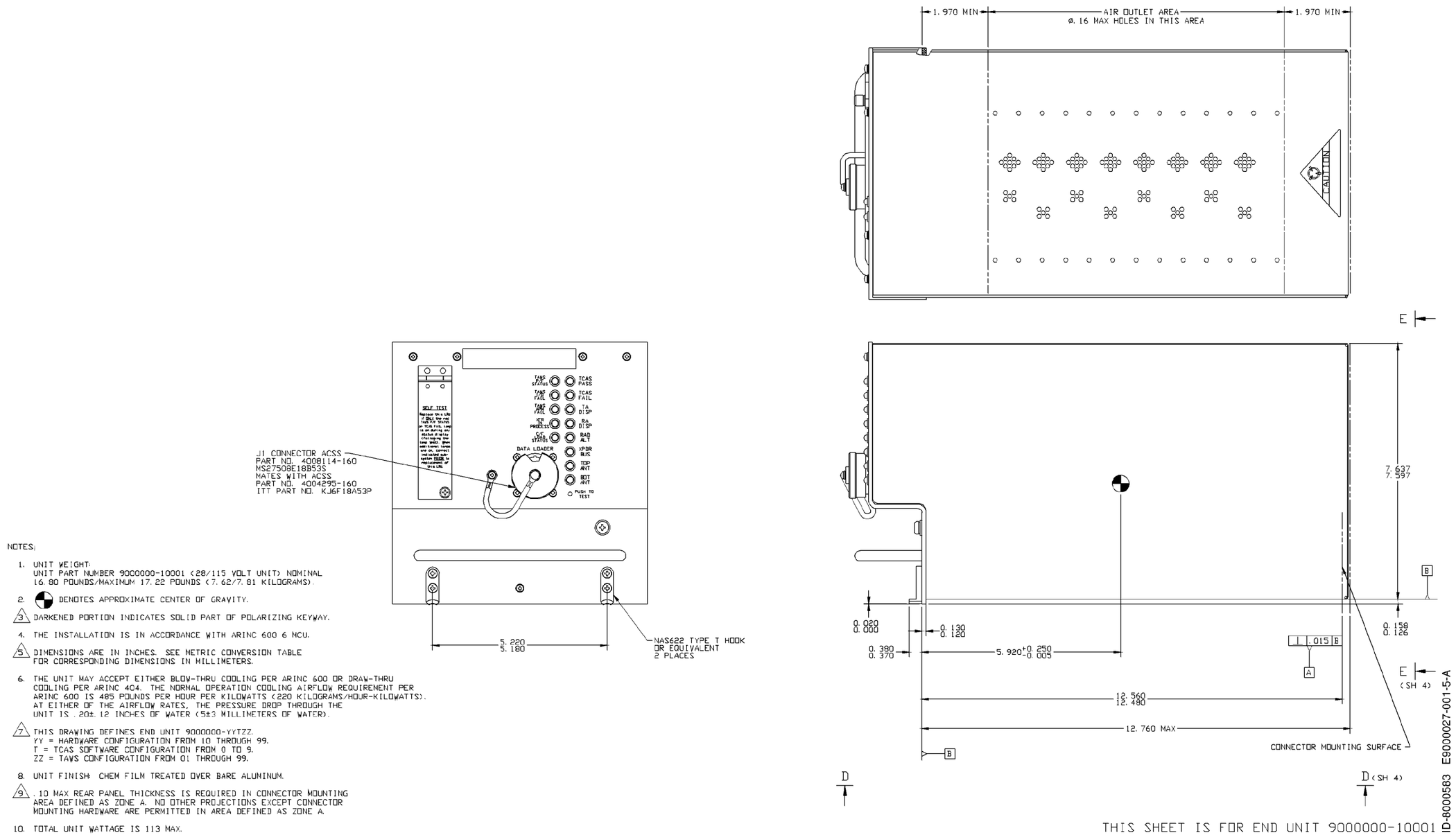

NOTES:

1. UNIT WEIGHT:
   UNIT PART NUMBER 9000000-10001 (28/115 VOLT UNIT) NOMINAL
   16.80 POUNDS/MAXIMUM 17.22 POUNDS (7.62/7.81 KILOGRAMS).
2. ◐ DENOTES APPROXIMATE CENTER OF GRAVITY.
3. △ DARKENED PORTION INDICATES SOLID PART OF POLARIZING KEYWAY.
4. THE INSTALLATION IS IN ACCORDANCE WITH ARINC 600 6 NCU.
5. △ DIMENSIONS ARE IN INCHES. SEE METRIC CONVERSION TABLE FOR CORRESPONDING DIMENSIONS IN MILLIMETERS.
6. THE UNIT MAY ACCEPT EITHER BLOW-THRU COOLING PER ARINC 600 OR DRAW-THRU COOLING PER ARINC 404. THE NORMAL OPERATION COOLING AIRFLOW REQUIREMENT PER ARINC 600 IS 485 POUNDS PER HOUR PER KILOWATTS (220 KILOGRAMS/HOUR-KILOWATTS). AT EITHER OF THE AIRFLOW RATES, THE PRESSURE DROP THROUGH THE UNIT IS .20±.12 INCHES OF WATER (5±3 MILLIMETERS OF WATER).
7. △ THIS DRAWING DEFINES END UNIT 9000000-YYTZZ.
   YY = HARDWARE CONFIGURATION FROM 10 THROUGH 99.
   T = TCAS SOFTWARE CONFIGURATION FROM 0 TO 9.
   ZZ = TAWS CONFIGURATION FROM 01 THROUGH 99.
8. UNIT FINISH: CHEM FILM TREATED OVER BARE ALUMINUM.
9. △ .10 MAX REAR PANEL THICKNESS IS REQUIRED IN CONNECTOR MOUNTING AREA DEFINED AS ZONE A. NO OTHER PROJECTIONS EXCEPT CONNECTOR MOUNTING HARDWARE ARE PERMITTED IN AREA DEFINED AS ZONE A.
10. TOTAL UNIT WATTAGE IS 113 MAX.

Figure 2-6 (Sheet 3). TT-950/952 T2CAS Computer Unit Outline and Installation Drawing

Use or disclosure of information on this page is subject to the restrictions in the proprietary notice of this document.

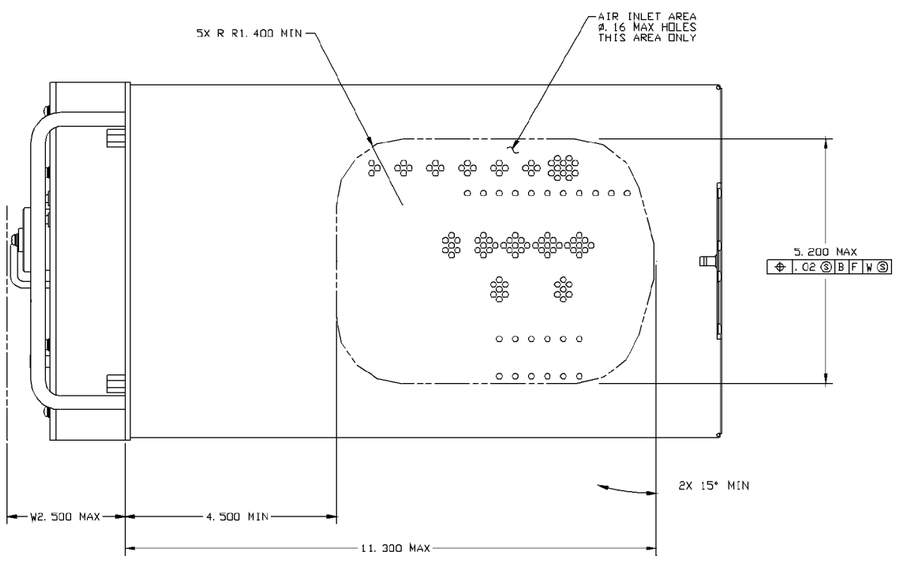

VIEW D-D

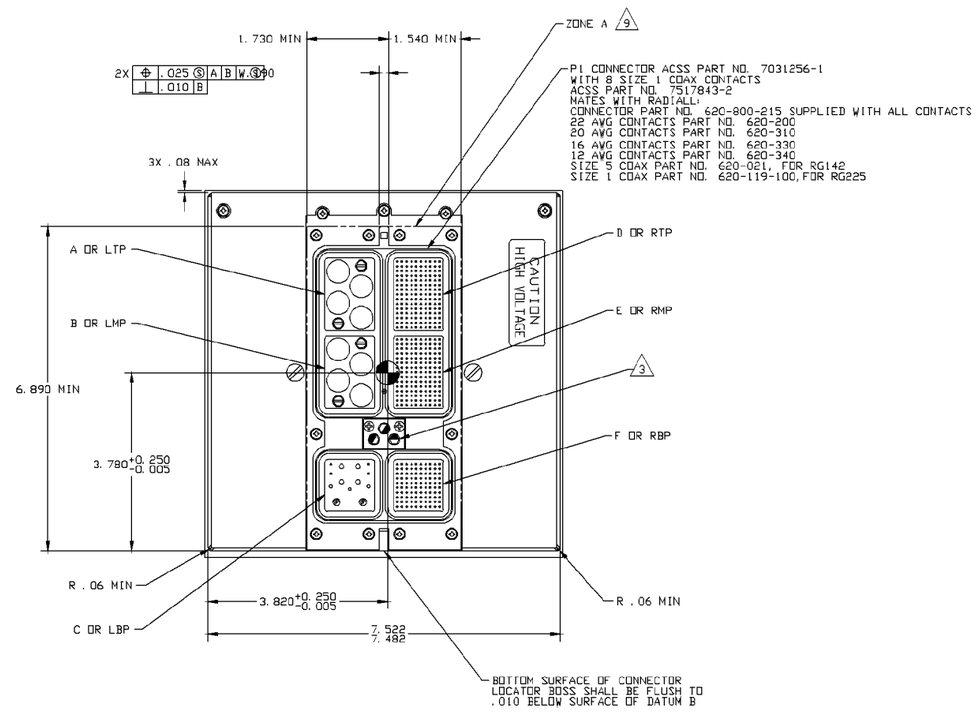

VIEW E-E

CONVERSION TABLE 5	
INCHES	MILLIMETERS
.010	.254
.015	.381
.020	.508
.025	.635
.04	1.02
.06	1.52
.08	2.03
.10	2.54
.12	3.05
.126	3.200
.13	3.30
.158	4.013
.16	4.06
.20	5.08
.25	6.35
.37	9.40
.38	9.65
1.40	35.56
1.54	39.12
1.73	43.94
1.97	50.04
2.50	63.50
3.78	96.01
3.82	97.03
4.50	114.30
5.18	131.57
5.22	132.59
5.92	150.37
6.89	175.01
7.48	189.99
7.52	191.01
7.60	193.04
7.64	194.06
11.30	287.02
12.48	316.99
12.56	319.02
12.76	324.10

THIS SHEET FOR END UNIT 9000000-10001

ID-8000584 E9000027-001-6-A

Figure 2-6 (Sheet 4). TT-950/952 T2CAS Computer Unit Outline and Installation Drawing

Use or disclosure of information on this page is subject to the restrictions in the proprietary notice of this document.

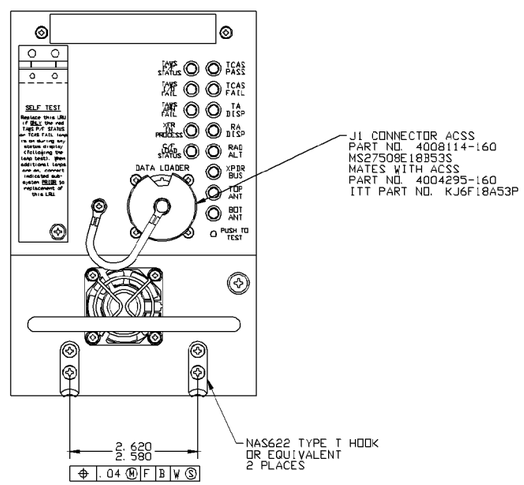

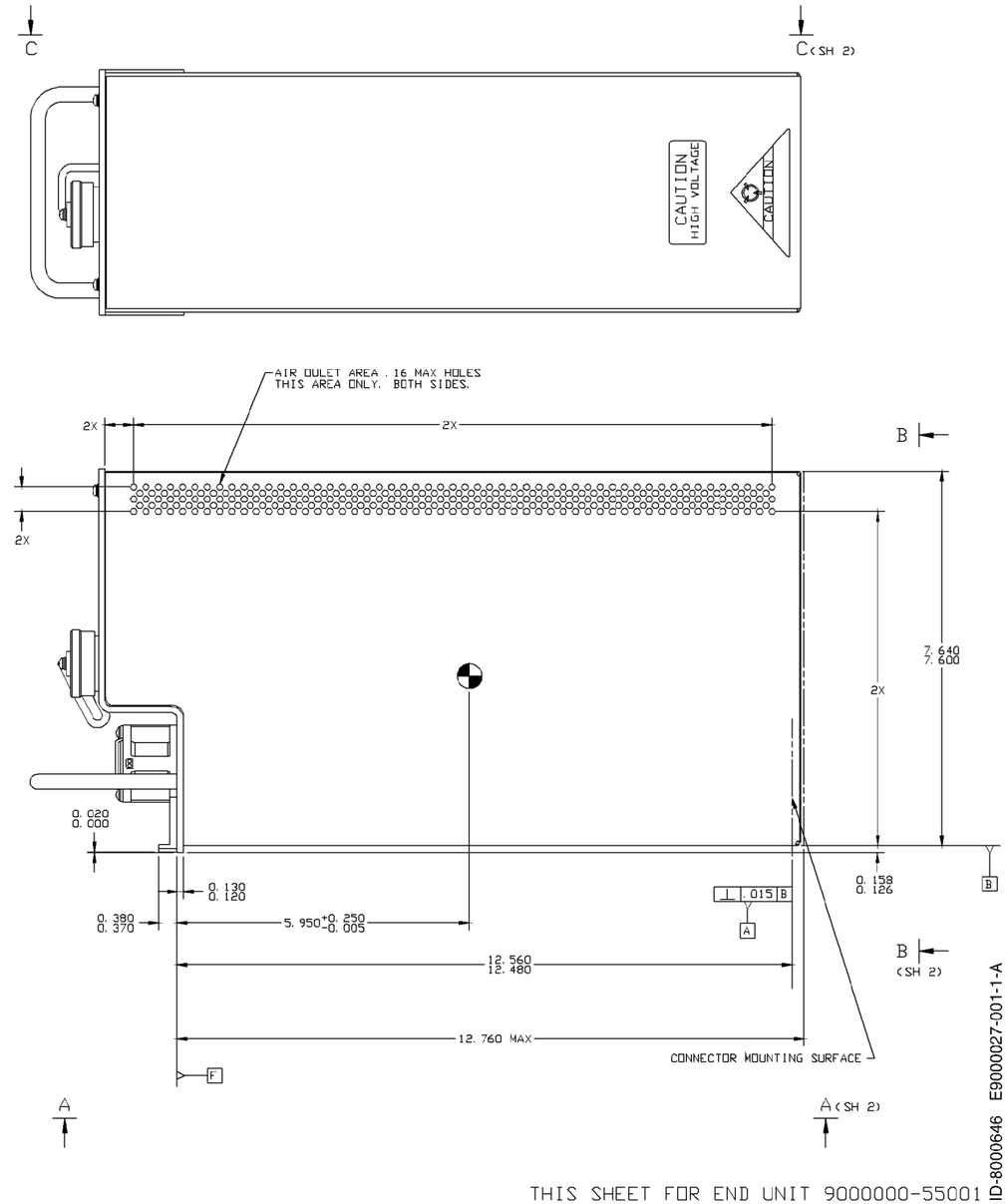

NOTES:

1. UNIT WEIGHT:
   UNIT PART NUMBER 9000000-55001 (26 VOLT UNIT) NOMINAL
   14.71 POUNDS/MAXIMUM 15.15 POUNDS (6.67/6.87 KILOGRAMS).
2. ⊕ DENOTES APPROXIMATE CENTER OF GRAVITY.
3. DARKENED PORTION INDICATES SOLID PART OF POLARIZING KEYWAY.
4. THE INSTALLATION IS IN ACCORDANCE WITH ARINC 600 4 MCU
   EXCEPT LOCATION OF AIR OUTLET HOLES.
5. DIMENSIONS ARE IN INCHES. SEE METRIC CONVERSION TABLE
   FOR CORRESPONDING DIMENSIONS IN MILLIMETERS.
6. THE UNIT IS SUPPLIED WITH A FAN. TO INSURE ADEQUATE COOLING
   PROVIDE .50 MINIMUM SPACING TO UNITS ON EITHER SIDE.?
7. THIS DRAWING DEFINES END UNIT 9000000-YYTZZ.
   YY = HARDWARE CONFIGURATION FROM 10 THROUGH 99.
   T = TCAS SOFTWARE CONFIGURATION FROM 0 THROUGH 9.
   ZZ = TAWS CONFIGURATION FROM 01 TO 99.
8. UNIT FINISH: CHEM FILM TREATED OVER BARE ALUMINUM.
9. .10 MAX REAR PANEL THICKNESS IS REQUIRED IN CONNECTOR MOUNTING AREA
   DEFINED AS ZONE A. NO OTHER PROJECTIONS EXCEPT CONNECTOR MOUNTING
   HARDWARE ARE PERMITTED IN AREA DEFINED AS ZONE A.

Figure 2-7 (Sheet 1). TT-951 T2CAS Computer Unit Outline and Installation Diagram

Use or disclosure of information on this page is subject to the restrictions in the proprietary notice of this document.

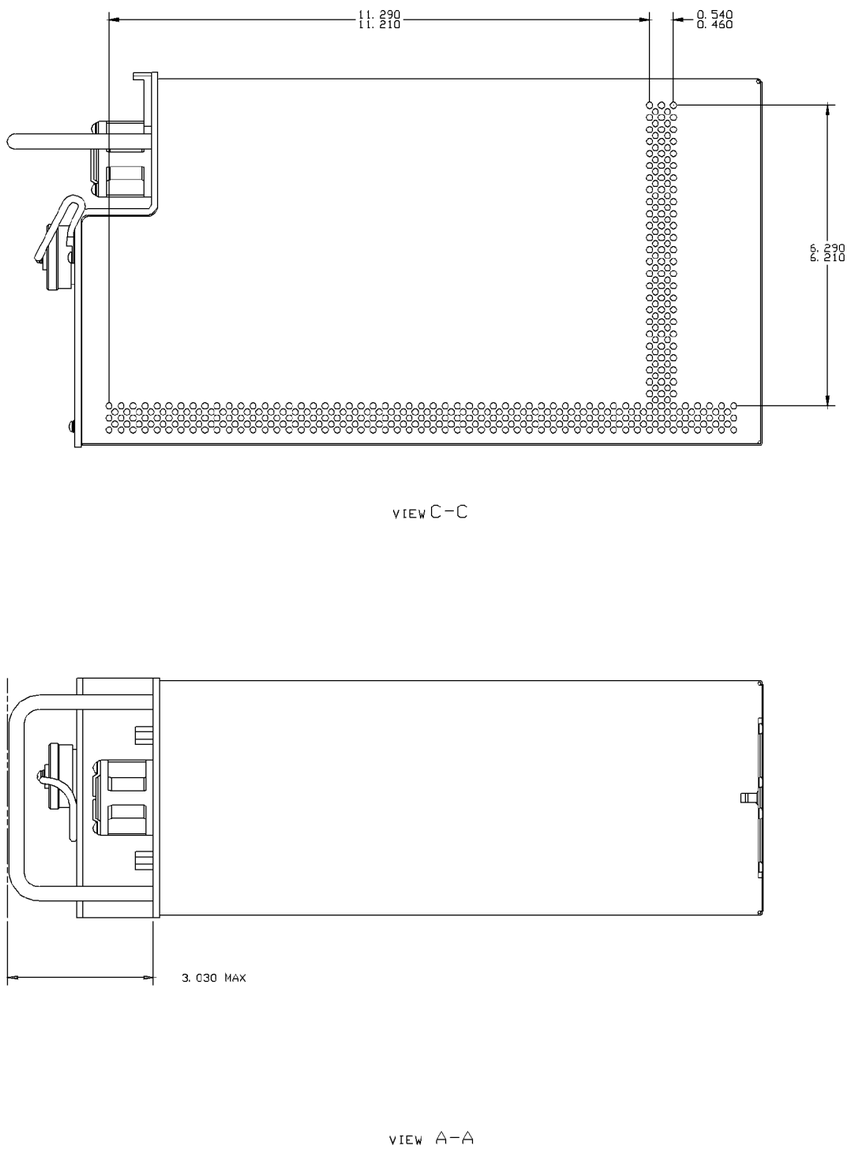

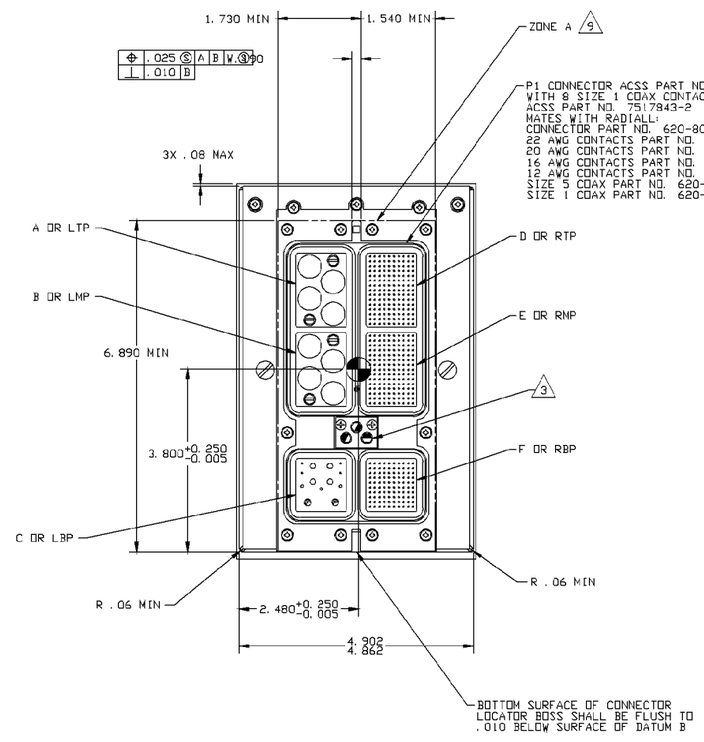

5

CONVERSION TABLE	
INCHES	MILLIMETERS
.005	.127
.010	.254
.015	.381
.02	.51
.025	.635
.04	1.02
.06	1.52
.08	2.03
.10	2.54
.12	3.05
.126	3.200
.13	3.30
.158	4.013
.16	4.06
.25	6.35
.37	9.40
.38	9.65
.46	11.68
.50	12.70
.51	12.95
.54	13.72
.63	16.00
1.54	39.12
1.73	43.94
2.48	62.99
2.58	65.53
2.62	66.55
3.03	76.96
3.80	96.52
4.86	123.44
4.90	124.46
5.95	149.35
6.21	157.73
6.29	159.77
6.765	171.831
6.885	174.897
6.89	175.01
7.60	193.04
7.64	194.06
11.21	284.73
11.29	286.77
12.48	316.99
12.56	319.02
12.76	324.10
12.96	329.18
13.04	331.22

THIS SHEET FOR END UNIT 9000000-55001

ID-8000647 E9000027-001-2-A

Figure 2-7 (Sheet 2). TT-951 T2CAS Computer Unit Outline and Installation Diagram

Use or disclosure of information on this page is subject to the restrictions in the proprietary notice of this document.

APPROXIMATE CENTER OF GRAVITY DIMENSIONS			
UNIT PART NUMBER	DIM X ± .25	DIM Y ± .25	DIM Z ± .25
7517800-10XXX THRU 7517800-54XXX (115 VOLT UNITS)	2.59	3.63	5.49
7517800-55XXX THRU 7517800-99XXX (28 VOLT UNITS)	2.43	3.78	5.57

7

HARDWARE LABEL CONTENTS (FOR 115 VOLT UNITS SUPPLIED TO BOEING ONLY)	
MODEL NUMBER	XS-950
UNIT NAME	DATA LINK TRANSPONDER
HARDWARE PART NUMBER	7517800-10
WEIGHT	11.5
ENVIRONMENTAL CATEGORY	DO-160C ENV CAT [A2E1]-BB[CLMY]XXXXXXZEAEZRZA3E3XX
TSO	C112 CL043,121,F11
FCC ID	FCC ID GB8XS-950

7

SOFTWARE/LRU LABEL CONTENTS (FOR 115 VOLT UNITS SUPPLIED TO BOEING ONLY)	
PART NUMBER	7517800-10001, 7517800-10002, 7517800-10004, 7517800-10005
DO-178B LEVEL	B

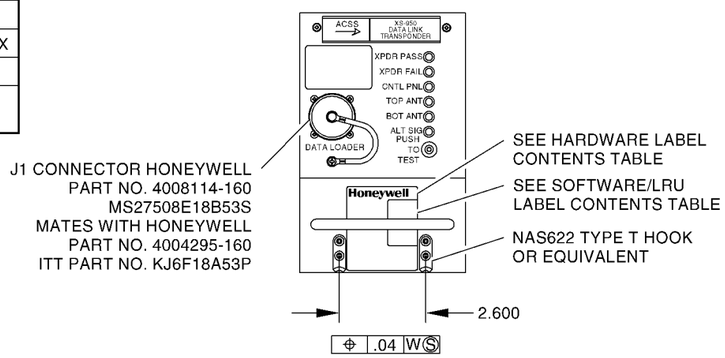

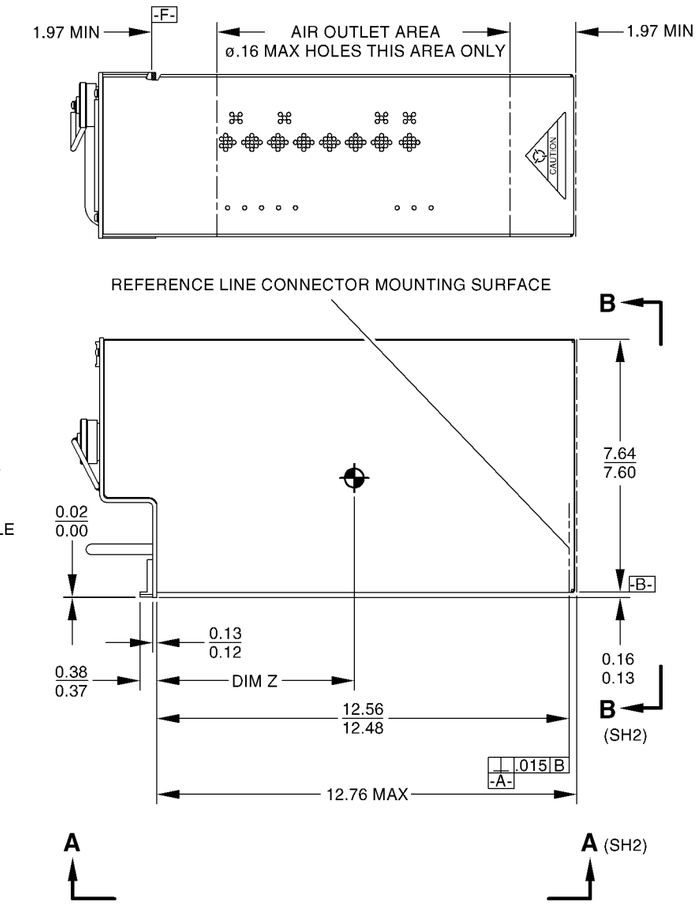

NOTES:

1. UNIT WEIGHT: .
   UNIT PART NUMBER 7517800-10XXX THRU 7517800-54XXX (115 VOLT UNITS)
   11.5 ± .35 POUNDS (5.22 ± .16 KILOGRAMS).
   UNIT PART NUMBER 7517800-55XXX THRU 7517800-99XXX (28 VOLT UNITS)
   10.3 ± .31 POUNDS (4.67 ± .14 KILOGRAMS).
2. ⌖ DENOTES APPROXIMATE CENTER OF GRAVITY.

3 DARKENED PORTION INDICATES SOLID PART OF POLARIZING KEYWAY.

4. THE INSTALLATION IS IN ACCORDANCE WITH ARINC 600 NUMBER 4 LRU.

5 DIMENSIONS ARE IN INCHES. SEE METRIC CONVERSION TABLE FOR CORRESPONDING DIMEMSIONS IN MILLIMETERS.

6. THE UNIT MAY ACCEPT EITHER BLOW-THRU COOLING PER ARINC 600 OR DRAW-THRU COOLING PER ARINC 404. FOR TRANSPONDER OPERATION WITHOUT EXTENDED DOWNLINK (DELM) DATA LINK, THE NORMAL OPERATION COOLING AIRFLOW REQUIREMENT PER ARINC 600 IS 28.7 ± 2 POUNDS PER HOUR (13 ± 0.9 KILOGRAMS/HOUR). FOR TRANSPONDER OPERATION WITH EXTENDED DOWNLINK (DELM) DATA LINK, THE NORMAL OPERATION COOLING AIRFLOW REQUIREMENT PER ARINC 600 IS 40.7 ± 2 POUNDS PER HOUR (18.4 ± 0.9 KILOGRAMS/HOUR). AT ALL OF THE AIRFLOW RATES, THE PRESSURE DROP THROUGH THE TRANSPONDER IS .20 ± .12 INCHES OF WATER (5 ± 3 MILLIMETERS OF WATER).

7 THIS DRAWING DEFINES END UNIT 7517800-YYXXX.
YY = HARDWARE DASH NUMBER FROM 10 THROUGH 99.
XXX = SOFTWARE DASH NUMBER FROM 001 THROUGH 999.
FOR UNITS SUPPLIED TO BOEING SEE HARDWARE AND SOFTWARE/LRU LABEL CONTENT TABLES.

8. UNIT FINISH: BLACK SEMI-GLOSS WITH SEMI-GLOSS CLEAR SPLATTER ALL OVER EXCEPT FOR BOTTOM WHICH IS CHEMICAL FILM.

9 NO OTHER PROJECTIONS EXCEPT CONNECTOR MOUNTING HARDWARE ARE PERMITTED IN AREA DEFINED AS ZONE A.

10. THIS INFORMATION IS PROVIDED TO COMPLY WITH 14 CFR PART 21.605 AND SECTION (c) DATA REQUIREMENTS OF THE TSO'S APPLICABLE TO HONEYWELL PRODUCT, PART NUMBER 7517800-20012:
    THE ANALOG ALTIMETER INTERFACE FUNCTIONALITY PROVIDED BY THE PART NUMBERS 7517800-20012 HAS NOT BEEN EVALUATED AS PART OF ANY TSO MINIMUM OPERATIONAL PERFORMANCE STANDARDS. THE INSTALLER OF ANY OF THE ABOVE LISTED PRODUCTS, WISHING TO USE THE NON TSO APPLICABLE FUNCTIONALITY STATED ABOVE MUST ENSURE THAT THIS FUNCTIONALITY IS EVALUATED AS PART OF A TYPE CERTIFICATION, SUPPLEMENTAL TYPE CERTIFICATION, OR AMENDED TYPE CERTIFICATION PROGRAM FOR THE AIRCRAFT IN WHICH THIS FUNCTIONALITY IS TO BE UTILIZED.
11. THIS INFORMATION IS PROVIDED TO COMPLY WITH 14 CFR PART 21.605 AND SECTION (c) DATA REQUIREMENTS OF THE TSO'S APPLICABLE TO HONEYWELL PRODUCT, PART NUMBER 7517800-10003:
    THE AIRBORNE DEPENDENCY SURVEILLANCE - BROADCAST (ADS-B) FUNCTIONALITY PROVIDED BY THE PART NUMBER 7517800-10003 HAS NOT BEEN EVALUATED AS PART OF ANY TSO MINIMUM OPERATIONAL PERFORMANCE STANDARDS. THE INSTALLER OF ANY OF THE ABOVE LISTED PRODUCTS, WISHING TO USE THE NON TSO APPLICABLE FUNCTIONALITY STATED ABOVE MUST ENSURE THAT THIS FUNCTIONALITY IS EVALUATED AS PART OF A TYPE CERTIFICATION, SUPPLEMENTAL TYPE CERTIFICATION, OR AMENDED TYPE CERTIFICATION PROGRAM FOR THE AIRCRAFT IN WHICH THIS FUNCTIONALITY IS TO BE UTILIZED.

ID-8000585 E7517806-1-L

Figure 2-8 (Sheet 1). XS-950 Data Link Transponder Outline and Installation Diagram

Use or disclosure of information on this page is subject to the restrictions in the proprietary notice of this document.

CONVERSION TABLE	
INCHES	MILLIMETERS
.010	.254
.015	.381
.020	.508
.025	.635
.040	1.016
.08	2.03
.12	3.05
.13	3.30
.16	4.06
.25	6.35
.37	9.40
.38	9.65
.81	20.57
1.00	25.40
1.97	50.04
2.43	61.722
2.50	63.50
2.59	65.79
2.600	66.040
3.63	92.20
3.78	96.01
4.50	114.30
4.86	123.44
4.90	124.46
5.49	139.45
5.57	141.48
6.89	175.01
7.60	193.04
7.64	194.06
11.30	287.02
12.48	316.99
12.56	319.02
12.76	324.10

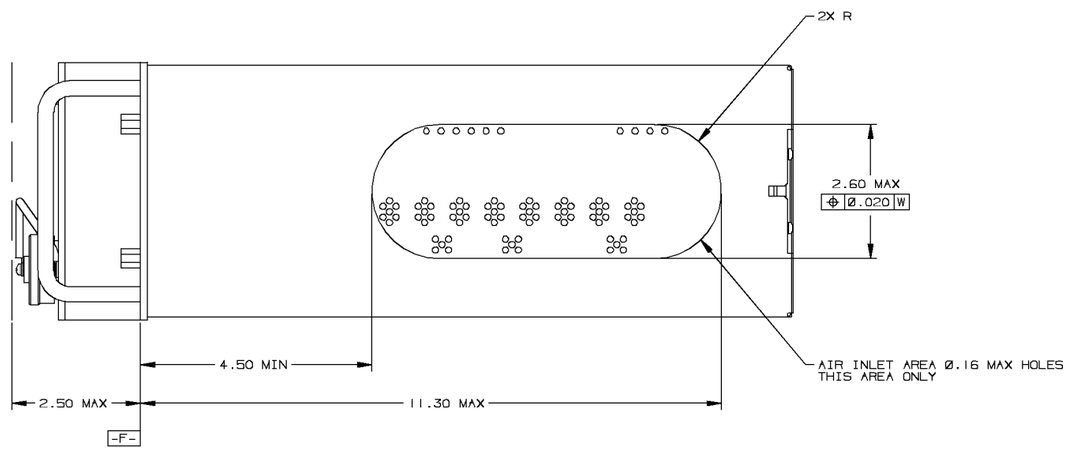

VIEW A-A

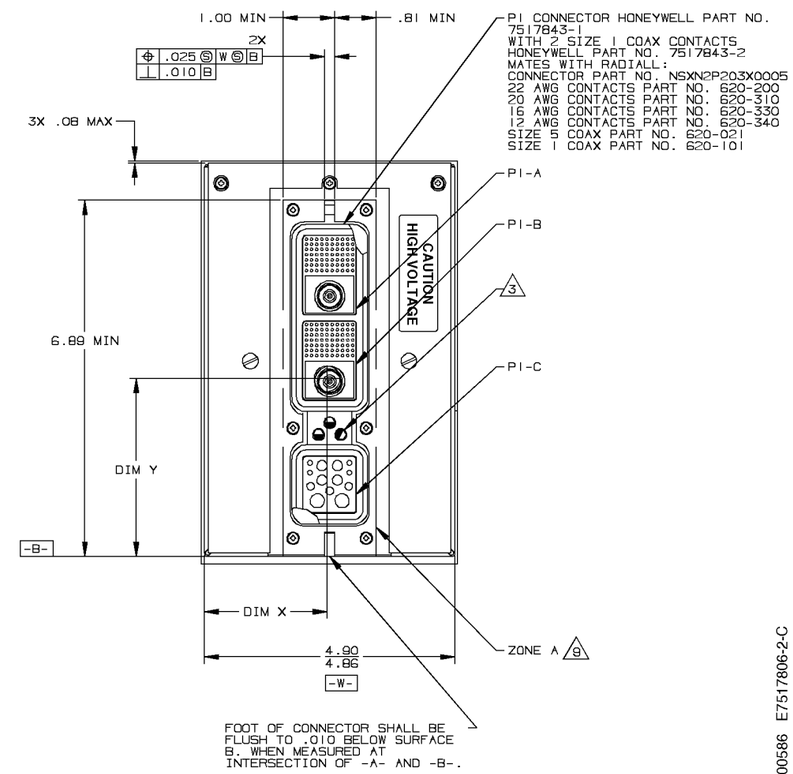

VIEW B-B

ID-8000586 E7517806-2-C

Figure 2-8 (Sheet 2). XS-950 Data Link Transponder Outline and Installation Diagram

Use or disclosure of information on this page is subject to the restrictions in the proprietary notice of this document.

NOTES:
(UNLESS OTHERWISE SPECIFIED):

1. ALL DIMENSIONS IN PARENTHESIS () ARE IN MILLIMETERS.

2. WHEN INSTALLING MOUNT ON A FLAT SURFACE (SEE DETAIL F, SHEET 2) USE SPACER KIT 7510351-901 TO ALLOW REMOVAL OF RADIO FROM MOUNTING TRAY.

3. TO ASSURE PROPER GROUNDING OF THIS SYSTEM, THE AIRCRAFT SURFACE TO WHICH ALL MOUNTINGS OR UNITS ARE ATTACHED MUST BE CLEAN BARE METAL. MOUNT TO AIRCRAFT RESISTANCE SHALL BE 2.5 MILLIOHMS MAX. WITHOUT WIRING INSTALLED.

4. DENOTES APPROXIMATE CENTER OF GRAVITY.

5. FOR ASSEMBLIES, KITS AND ACCESSORIES SEE:

   7517455-902 MT-854 MOUNTING TRAY

6. SECURE THUMB NUTS OF MOUNT USING LOCKING WIRE.

7. CONNECTOR J1 MUST FLOAT. ALLOW 6 INCHES MIN OF CABLE LENGTH FROM REAR OF CONNECTOR J1 TO ANY CABLE CLAMPING DEVICE.

8. THE INDIVIDUAL RF CABLES BETWEEN THE ANTENNA AND THE TRANSPONDER UNIT (INCLUDING CONNECTORS) SHALL HAVE A NOMINAL CHARACTERISTIC IMPEDANCE OF 50 OHMS WITH A TOTAL INSERTION LOSS OF 2±1dB OVER THE 1030 TO 1090 MHz FREQUENCY BAND.
   THE FOLLOWING TABLE SHOULD BE USED FOR MINIMUM/MAXIMUM TRANSPONDER CABLE LENGTHS FOR A GIVEN TYPE OF CABLE. THE PROPEGATION DELAY FACTOR IN NANO-SECONDS PER FOOT IS USED FOR DIVERSITY TRANSPONDER INSTALLATIONS:

CABLE TYPE	CABLE LENGTH (FEET)		PROPEGATION DELAY FACTOR (NSEC/FOOT)
	MIN	MAX	
RG-142/U	7	16	1.47
RG-214/U	10	25	1.54
RG-218/U	26	60	1.54
RG-225/U	13	34	1.47
RG-393/U	13	34	1.47

UNIT WEIGHT TABLE			
UNIT PART NO.	MODEL NO.	LBS	(KG)
7510700-850	RCZ-852	5.00	2.27

9. FOR TRANSPONDER INSTALLATIONS WHICH REQUIRE DIVERSITY ANTENNAS, THE FOLLOWING REQUIREMENTS APPLY.

   A. THE DISTANCE BETWEEN TOP AND BOTTOM ANTENNAS ON THE HORIZONTAL PLANE SHALL NOT EXCEED 25 FEET (7.6 METERS).

   B. THE LENGTHS OF THE TOP AND BOTTOM ANTENNA CABLES SHALL BE MATCHED SO THAT THE DIFFERENCE BETWEEN THE MEAN REPLY DELAYS OF SIGNALS AT THE TOP AND BOTTOM ANTENNAS SHALL NOT EXCEED 50 NANO-SECONDS. THE REPLY DELAY IS THE TIME BETWEEN THE INTERROGATION AND REPLY AS MEASURED AT THE ANTENNA OR THE ANTENNA END OF THE TRANSPONDER TO ANTENNA CABLE. DIFFERENCES IN THE ANTENNA CABLE DELAY MAY BE COMPENSATED BY ANTENNA CABLE STRAPS W37 AND W38.

   FOR STANDARD CABLES, COMPUTE THE DIFFERENCE IN THE TOP AND BOTTOM CABLE LENGTH (TOP LENGTH - BOTTOM LENGTH) AND USE THE FOLLOWING TABLE TO SET ANTENNA CABLE STRAPS W37 AND W38:

ANTENNA CABLE STRAP	NOT ALLOWED	BOTTOM>TOP W37 UNCUT W38 CUT	BOTTOM=TOP W37 CUT W38 CUT	TOP>BOTTOM W37 CUT W38 UNCUT	NOT ALLOWED
CABLE TYPE	TOP LENGTH - BOTTOM LENGTH (FEET)				
RG-142/U RG-225/U RG-393/U	LESS THAN -42.5	-42.5 TO -14.3	-14.2 TO +14.2	+14.3 TO +42.5	GREATER THAN +42.5
RG-214/U RG-218/U	LESS THAN -40.6	-40.6 TO -13.6	-13.5 TO +13.5	+13.6 TO +40.6	GREATER THAN +40.6

   FOR CABLES NOT LISTED ABOVE WHICH HAVE DIFFERENT PROPEGATION DELAY FACTORS THAN THOSE IN THE ABOVE TABLES, USE THE FOLLOWING FORMULA TO COMPUTE THE STRAP SETTINGS:

   REPLY DELAY = (TOP LENGTH - BOTTOM LENGTH) * 2 * DELAY FACTOR

   WHERE:

   REPLY DELAY = MEAN REPLY DELAY BETWEEN TOP AND BOTTOM ANTENNAS (NANO-SECONDS)
   TOP LENGTH = LENGTH OF TOP ANTENNA CABLE (FEET)
   BOTTOM LENGTH = LENGTH OF BOTTOM ANTENNA CABLE (FEET)
   DELAY FACTOR = PROPEGATION DELAY FACTOR (NANO-SECONDS PER FOOT)

MOUNT WEIGHT (TOL±.20 LBS)			
MOUNT PART NO.	MODEL NO.	LBS	(KG)
7517455-902	MT-854	1.25	.57

NOT ALLOWED	BOTTOM>TOP W37 UNCUT W38 CUT	BOTTOM=TOP W37 CUT W38 CUT	TOP>BOTTOM W37 CUT W38 UNCUT	NOT ALLOWED
REPLY DELAY (NANO-SECONDS)				
LESS THAN -125	-125 TO -42	-41 TO +41	+42 TO +125	GREATER THAN +125

10.

11. WIRE 1 HARNESS ASSEMBLY TO J1 CONNECTOR USING TERMINATION TABLE.

12. WHEN STRAPS W1, W2 ARE SET FOR EXTERNAL RCB CONTROL SOURCE (W1=CUT, W2=CUT), THE TRANSPONDER OBTAINS STRAP INFORMATION FROM THE REMOTE COM UNIT WHICH CONTROLS THE TRANSPONDER. IN THIS CONFIGURATION, STRAPS W5 THRU W48 DO NOT CONTAIN STRAP INFORMATION FOR THE TRANSPONDER.

ID-8000587 E7510706-850-1-AM

Figure 2-9 (Sheet 1). RCZ-852 Mode S Transponder Outline and Installation Diagram

Use or disclosure of information on this page is subject to the restrictions in the proprietary notice of this document.

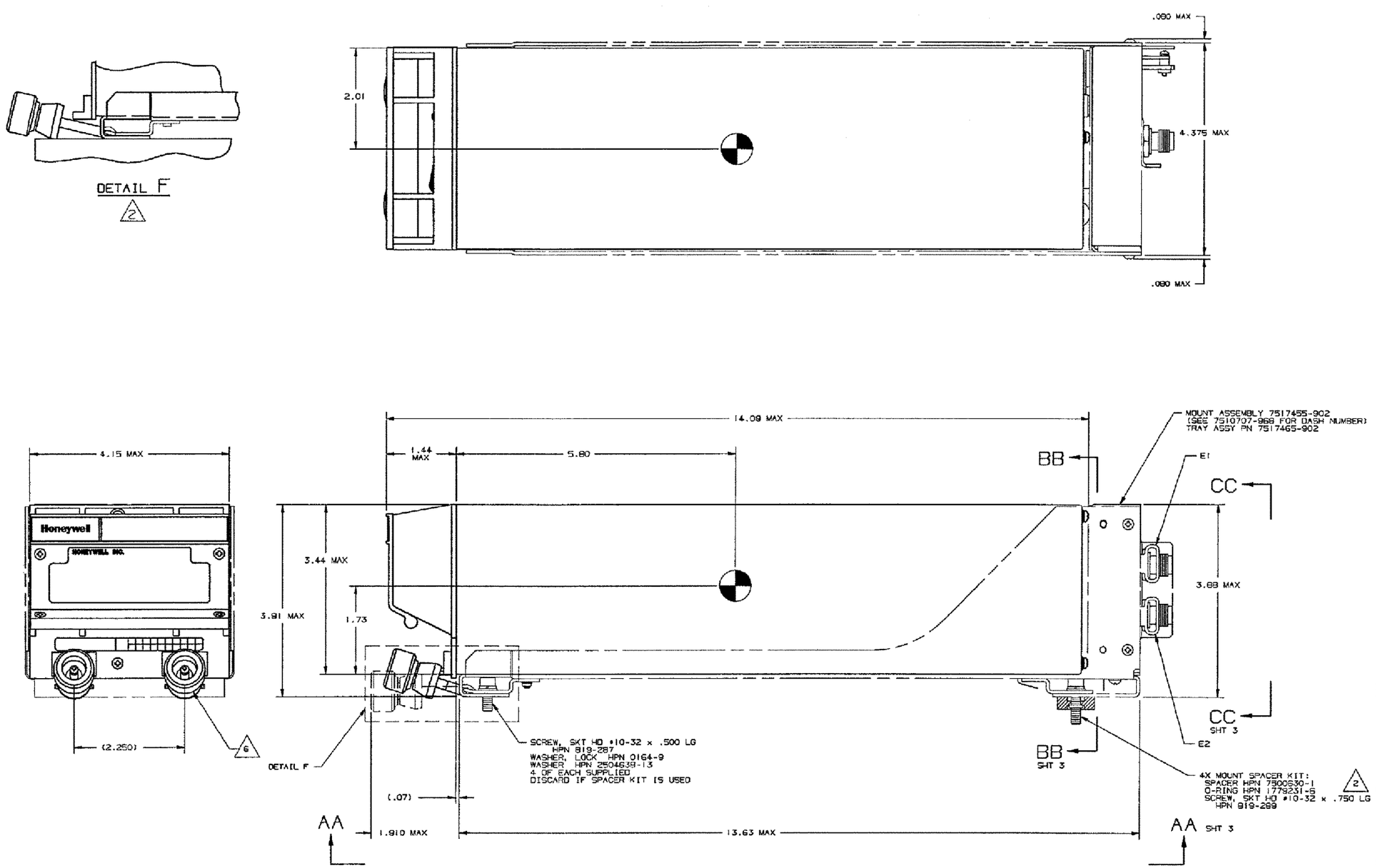

Figure 2-9 (Sheet 2). RCZ-852 Mode S Transponder Outline and Installation Diagram

Use or disclosure of information on this page is subject to the restrictions in the proprietary notice of this document.

TERMINATION TABLE 11		
FROM	TO	WIRE
W1P1-1	J1- 89	W1W1 (GRN)
W1P1-2	J1-102	W1W2 (ORN)
W1P1-3	J1- 16	W1W3 (RED)
W1P1-4	J1- 43	W1W4 (BLK)
W1P1-6	J1- 88	W1W6 (BLU)
W1P1-7	J1-101	W1W7 (WHT)
W1P1-8	J1-103	W1W8 (YEL)

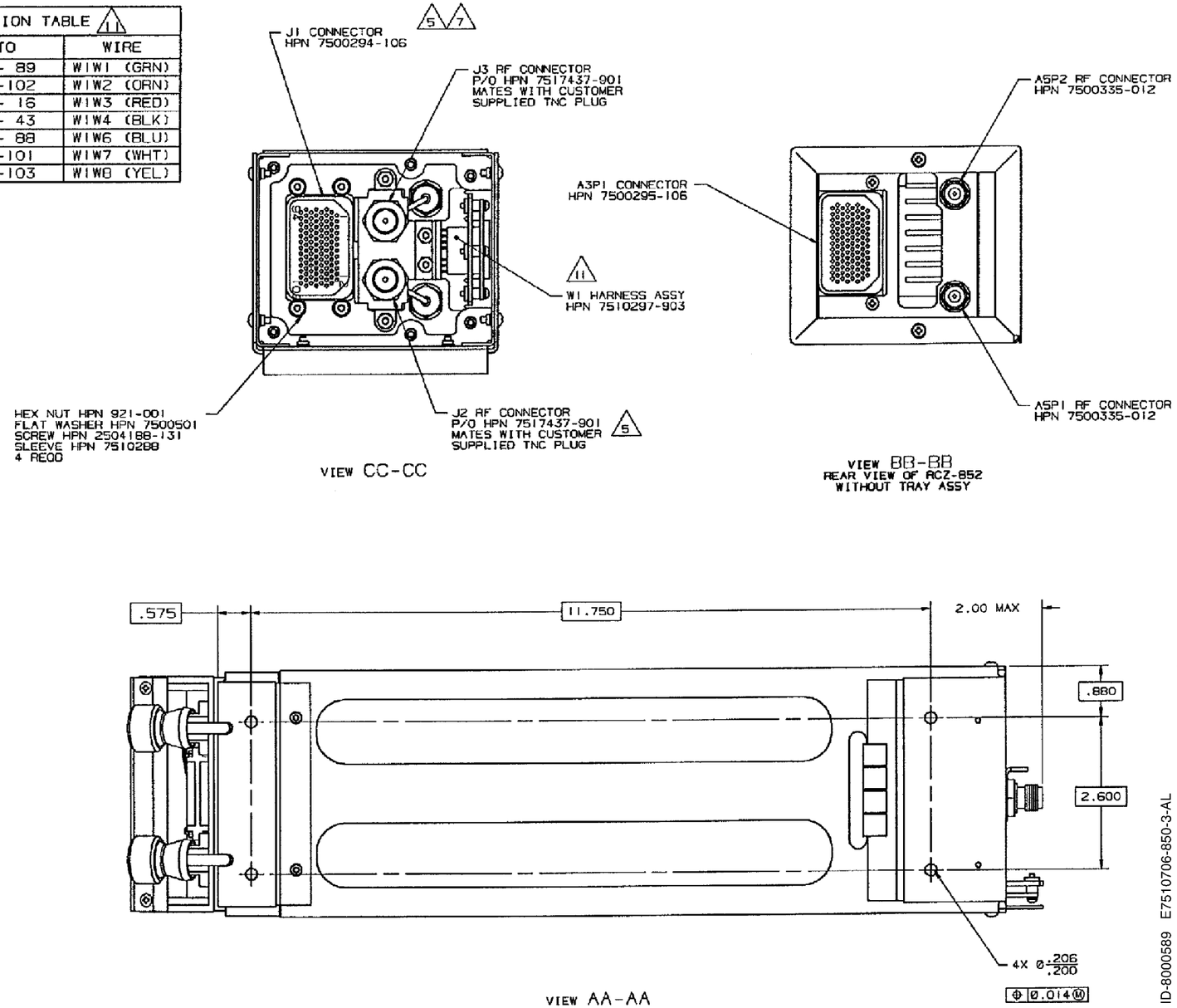

Figure 2-9 (Sheet 3). RCZ-852 Mode S Transponder Outline and Installation Diagram

Use or disclosure of information on this page is subject to the restrictions in the proprietary notice of this document.

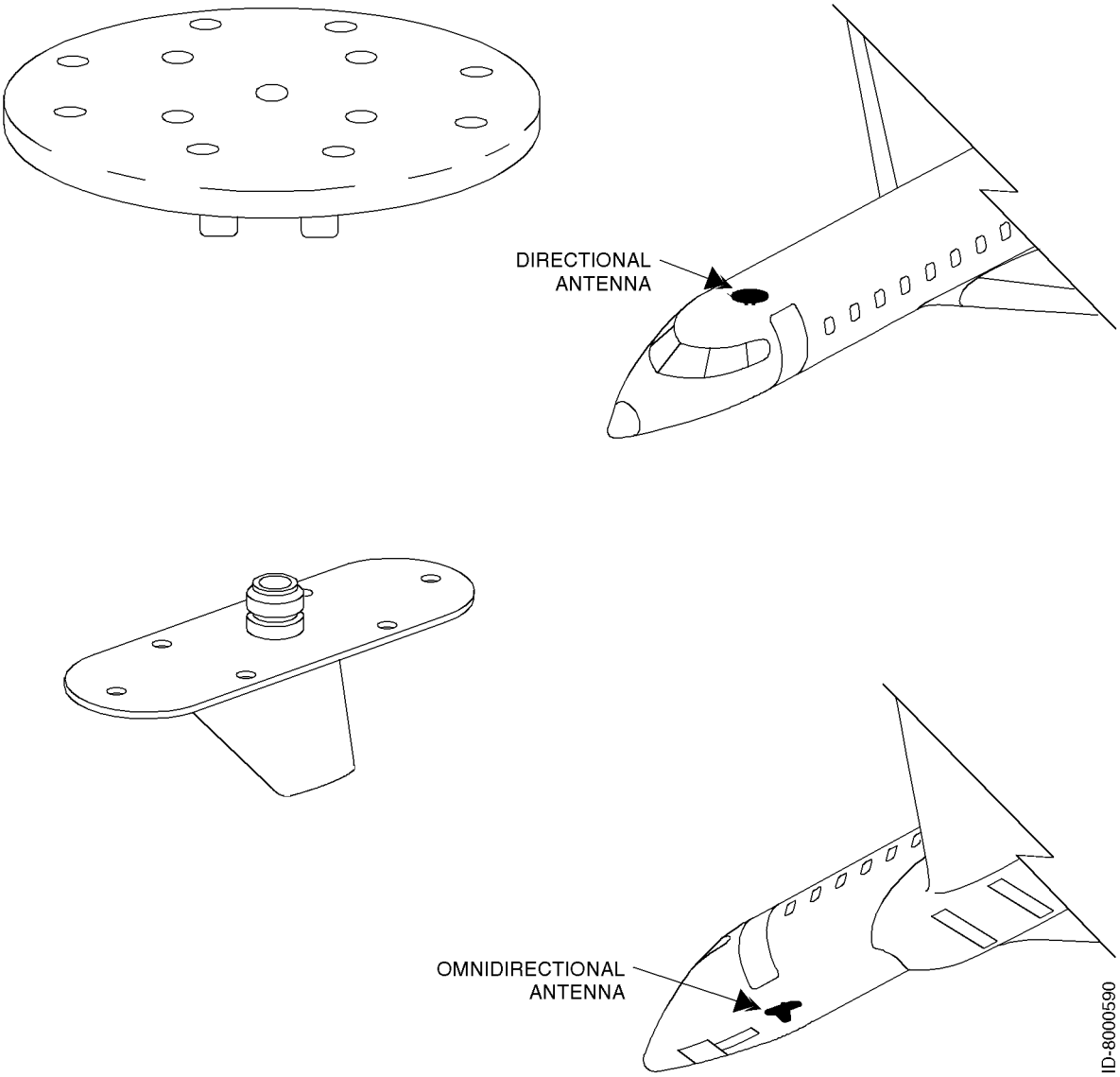

Figure 2-10. TCAS Directional and Omnidirectional Antenna Locations

Use or disclosure of information on this page is subject to the restrictions in the proprietary notice of this document.

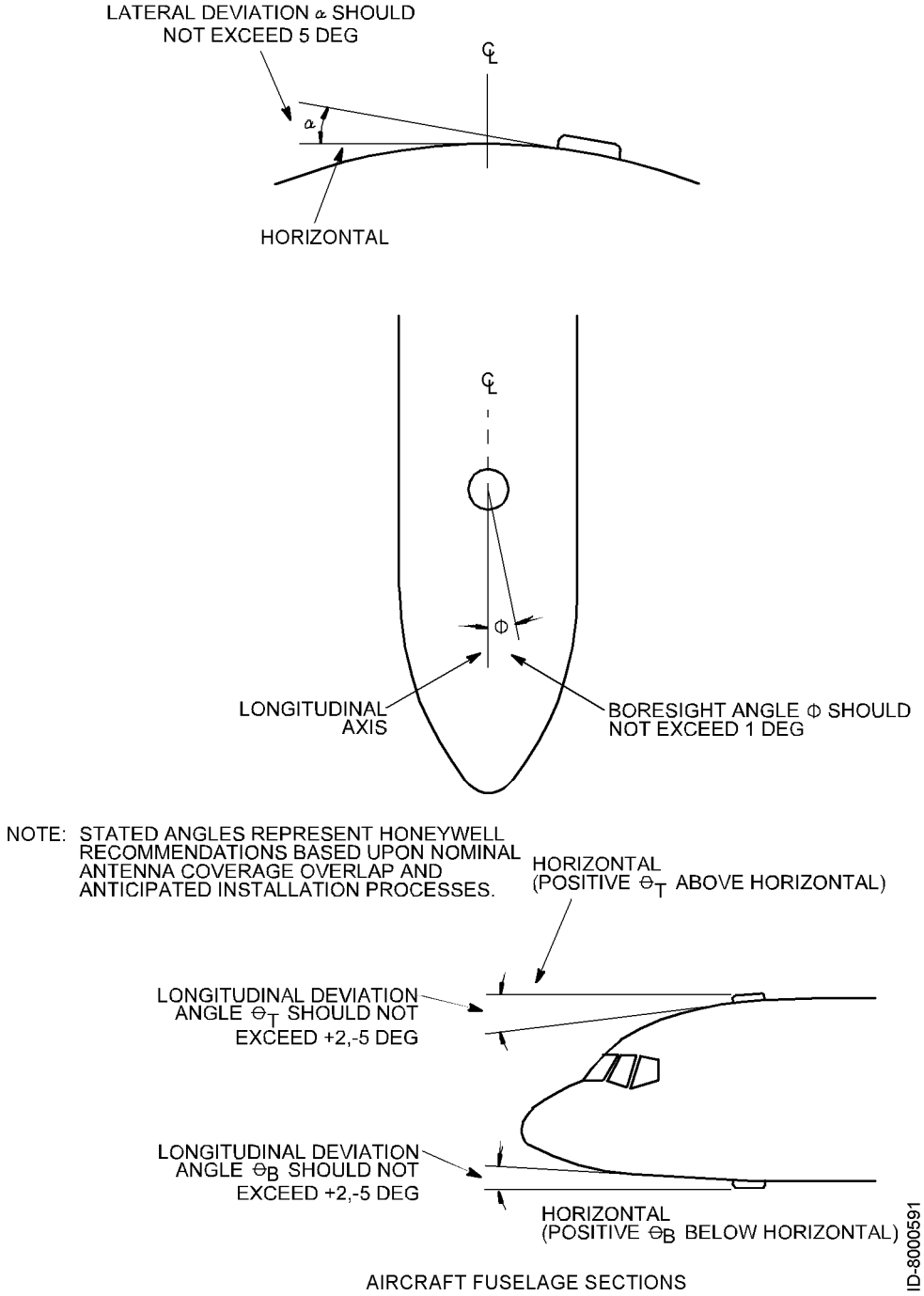

Figure 2-11. Directional Antenna Angular Orientation

Use or disclosure of information on this page is subject to the restrictions in the proprietary notice of this document.

NOTES:

1. ⊕ DENOTES APPROXIMATE CENTER OF GRAVITY.

2. FOR MAXIMUM UNIT WEIGHT, REFER TO TABLES 3 AND 4.

3. DIMENSIONS SHOWN ARE IN INCHES. REFER TO METRIC CONVERSION TABLE FOR CORRESPONDING DIMENSIONS IN MILLIMETERS.

4.

5. INDICATED ASSEMBLY INCLUDES A .015 INCH (.381 MILLIMETER) TEFLON GASKET FOR PLACEMENT BETWEEN THE ANTENNA/ADAPTER ASSEMBLY AND THE AIRCRAFT.

6. ■ THE SOLID SQUARE SYMBOL DENOTES A CRITICAL PARAMETER. THE NUMBER IN THE CENTER CORRESPONDS TO THE FOLLOWING SUB-NOTE WITH THE SAME NUMBER, STATING TYPE AND NATURE OF CRITICALITY.

   ■1 INSTALLATION CRITICAL - COMPLIANCE WITH CRITICAL INSTALLATION REQUIREMENTS IS NECESSARY WHEN UTILIZING EITHER A HONEYWELL OR CUSTOMER SUPPLIED ADAPTER PLATE.

7. MOUNTING SCREWS SHALL BE STANDARD 10-32 UNF-2A PANHEAD CORROSION RESISTING (STAINLESS) STEEL SCREWS PER MILITARY SPECIFICATION MS51958. APPROPRIATE LENGTH WILL BE DETERMINED BY THE INSTALLER ALLOWING 0.5 INCHES FOR THE THICKNESS OF THE ANTENNA AND ADAPTER PLATE. A WASHER SHALL BE INSTALLED UNDER THE HEAD OF EACH MOUNTING SCREW. THE WASHER SHALL BE MADE OF PASSIVATED CORROSION RESISTANT STEEL PER MIL-S-5059 OR MIL-S-6721. THE AIR FORCE-NAVY AERONAUTICAL STANDARD PART NUMBER FOR THE WASHER IS AN960C10L. MOUNTING SCREWS ARE RECOMMENDED TO BE PHILLIPS TYPE TO EASILY DIFFERENTIATE BETWEEN INSTALLER PROVIDED MOUNTING SCREWS AND TORX SCREWS PERMANENTLY INSTALLED BY THE MANUFACTURER.

8. THE MOUNTING SCREWS SHALL BE TIGHTENED TO A TORQUE OF 22 ± 3 INCH-POUNDS (1.8 ± 0.2 FOOT-POUNDS OR 2.5 ± 0.3 NEWTON-METERS).

9. FOR INSTALLATIONS OF ANTENNAS WITH FLAT ADAPTER PLATES (PN 7514081-901, 7514081-902, 7514081-910, 7514081-913), THE SURFACE OF THE AIRCRAFT ADAPTER PLATE TO WHICH THE ANTENNA WILL MATE, IS RECOMMENDED TO BE FLAT WITHIN 0.010 INCHES.

10. MOUNTING SCREWS MUST BE USED TO SECURE THE ANTENNA TO THE AIRCRAFT AT EVERY CLEARANCE HOLE THROUGH THE ANTENNA. REFER TO TABLES 3 AND 4 FOR REQUIRED NUMBER OF AIRCRAFT MOUNTING SCREWS.

11. ALL 7514060 ANTENNAS (WHICH UTILIZE CUSTOMER PROVIDED ADAPTER PLATES) ARE SHIPPED FROM THE MANUFACTURER WITH 12 OPEN SCREW HOLES OF WHICH ALL MUST BE FILLED WITH SCREWS. EITHER FOUR OR EIGHT SCREWS MUST BE USED TO MOUNT THE ANTENNA TO THE AIRCRAFT (SEE PAGE 5 FOR MOUNTING CONFIGURATION). THE ANTENNA MUST BE SECURED TO EITHER THE ANTENNA ADAPTER PLATE OR AIRCRAFT ADAPTER/DOUBLER WITH SCREWS AT EVERY REMAINING ANTENNA CLEARANCE HOLE (EIGHT OR FOUR RESPECTIVELY) THAT IS NOT USED TO MOUNT THE ANTENNA TO THE AIRCRAFT.

12. THE TCAS DIRECTIONAL ANTENNA COMPLIES WITH THE MOUNTING FOOTPRINT OPTIONS SPECIFIED IN RTCA DO-185A.

METRIC CONVERSION TABLE	
INCHES	MILLIMETERS
.010	.254
.028	.71
.238	6.05
.244	6.20
.250	6.35
.360	9.14
.395	10.03
.600	15.24
.705	17.91
.806	20.47
1.560	39.62
1.900	48.26
2.900	73.66
3.000	76.20
5.000	127.00
7.375	187.33
9.310	236.47
42.0	1066.8
44.80	1137.92
61.52	1562.6
66.52	1689.6
74.02	1880.1
77.78	1975.6
85.06	2160.5
99.02	2515.1
111.02	2819.9
118.52	3010.4

ID-8000592 E7514069-1-R

Figure 2-12 (Sheet 1). Directional Antenna Outline and Installation Diagram

Use or disclosure of information on this page is subject to the restrictions in the proprietary notice of this document.

TABLE 1	
REF DES	SLEEVING COLOR
J1	YELLOW
J2	BLACK
J3	BLUE
J4	RED

TABLE 2	
DIM "B" (REF)	ANTENNA/ADAPTER ASSY PART NO.
1.560 MAX	7514081-901 THRU -909, -911, -912 AND -917
.705 MAX	7514081-910, -913, -914, -915 AND -916

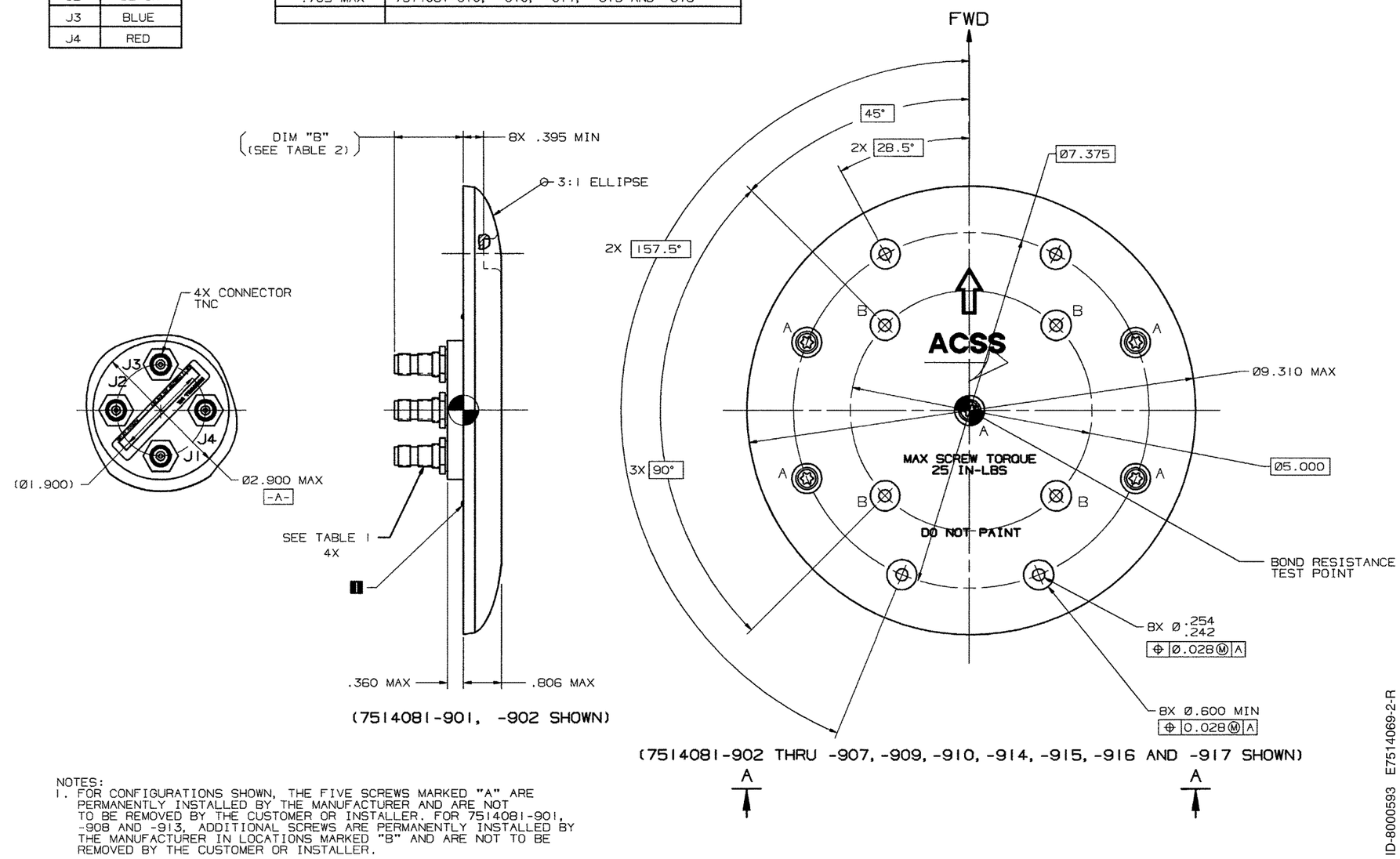

NOTES:
1. FOR CONFIGURATIONS SHOWN, THE FIVE SCREWS MARKED "A" ARE PERMANENTLY INSTALLED BY THE MANUFACTURER AND ARE NOT TO BE REMOVED BY THE CUSTOMER OR INSTALLER. FOR 7514081-901, -908 AND -913, ADDITIONAL SCREWS ARE PERMANENTLY INSTALLED BY THE MANUFACTURER IN LOCATIONS MARKED "B" AND ARE NOT TO BE REMOVED BY THE CUSTOMER OR INSTALLER.

Figure 2-12 (Sheet 2). Directional Antenna Outline and Installation Diagram

Use or disclosure of information on this page is subject to the restrictions in the proprietary notice of this document.

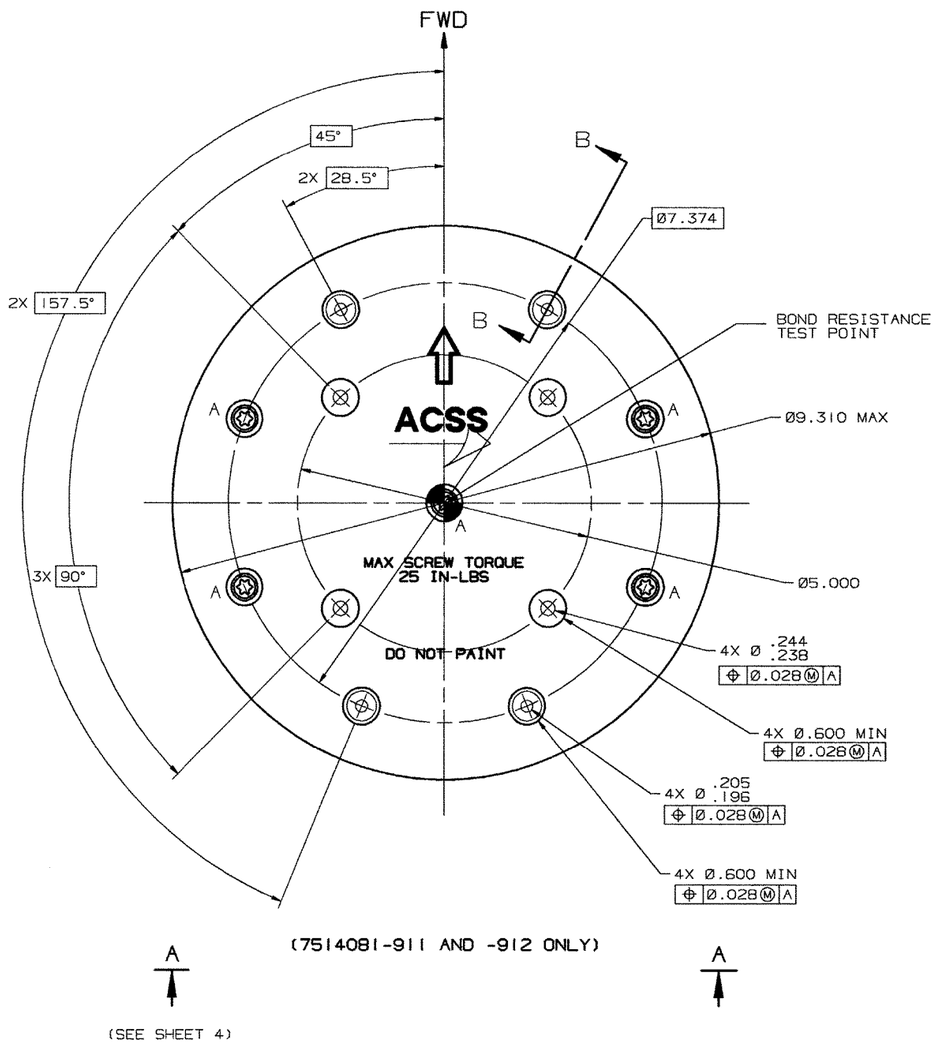

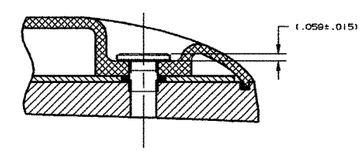

SECTION B-B
SCALE: 2/1
4 PLCS

NOTES:
1. FOR CONFIGURATIONS SHOWN, THE FIVE SCREWS MARKED "A" ARE PERMANENTLY INSTALLED BY THE MANUFACTURER AND ARE NOT TO BE REMOVED BY THE CUSTOMER OR INSTALLER.

ID-8000594 E7514069-3-R

Figure 2-12 (Sheet 3). Directional Antenna Outline and Installation Diagram

Use or disclosure of information on this page is subject to the restrictions in the proprietary notice of this document.

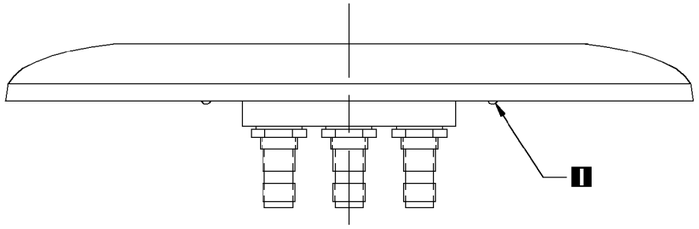

VIEW A-A
(SEE TABLE 3)

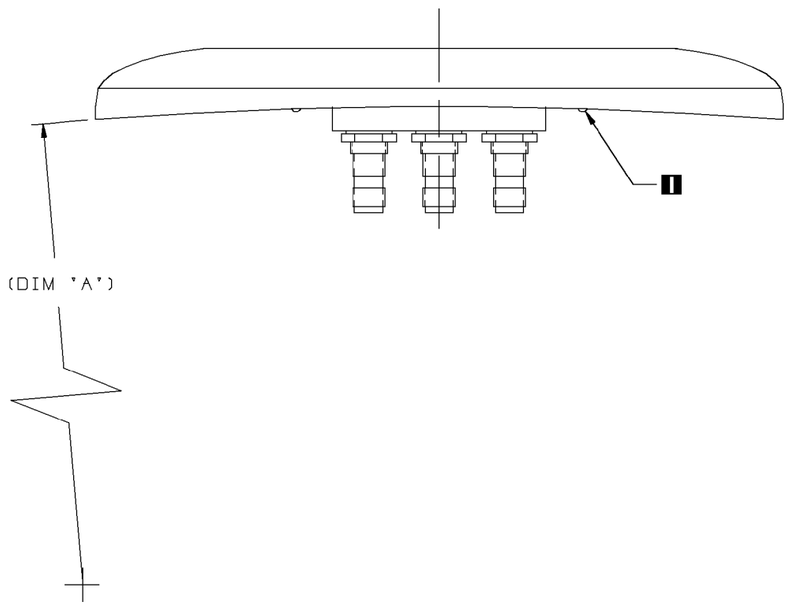

VIEW A-A
(SEE TABLE 4)

ANTENNA PART NUMBERS
FLAT ANTENNA BASE
TABLE 3

NUMBER OF AIRCRAFT MOUNTING SCREWS	ANTENNA/ADAPTER ASSY PART NO. *	CONNECTOR EXTENSION (TABLE 2 DIM "B" REF)	MAXIMUM UNIT WEIGHT LB (KG)
4	7514081-901	1.560 MAX	2.80 (1.27)
4	7514081-913	.705 MAX	2.80 (1.27)
8	7514081-902	1.560 MAX	2.80 (1.27)
8	7514081-910	.705 MAX	2.80 (1.27)

ANTENNA PART NUMBERS
CURVED ANTENNA BASE
TABLE 4

NUMBER OF AIRCRAFT MOUNTING SCREWS	DIM "A" (REF)	ANTENNA/ADAPTER ASSY PART NO. *	CONNECTOR EXTENSION (TABLE 2 DIM "B" REF)	MAXIMUM UNIT WEIGHT LB (KG)
8	R 61.52 MAX	7514081-903	1.560 MAX	2.90 (1.32)
8	R 66.52 MAX	7514081-904	1.560 MAX	2.90 (1.32)
8	R 74.02 MAX	7514081-905	1.560 MAX	2.90 (1.32)
8	R 77.78 MAX	7514081-906	1.560 MAX	2.90 (1.32)
8	R 99.02 MAX	7514081-907	1.560 MAX	2.80 (1.27)
4	R 111.02 MAX	7514081-908	1.560 MAX	2.80 (1.27)
8	R 118.52 MAX	7514081-909	1.560 MAX	2.80 (1.27)
8	R 77.78 MAX	7514081-911 5	1.560 MAX	2.90 (1.32)
8	R 111.02 MAX	7514081-912 5	1.560 MAX	2.80 (1.27)
8	R 53.02 MAX	7514081-914	.705 MAX	3.00 (1.36)
8	R 44.80 MAX	7514081-915	.705 MAX	3.10 (1.41)
8	R 42.0 MAX	7514081-916	.705 MAX	3.20 (1.45)
8	R 85.06 MAX	7514081-917	1.560 MAX	2.90 (1.32)

*THIS ASSEMBLY IS A COMPLETE ANTENNA ASSEMBLY READY FOR AIRCRAFT INSTALLATION.

ID-8000595 E7514069-4-P

Figure 2-12 (Sheet 4). Directional Antenna Outline and Installation Diagram

Use or disclosure of information on this page is subject to the restrictions in the proprietary notice of this document.

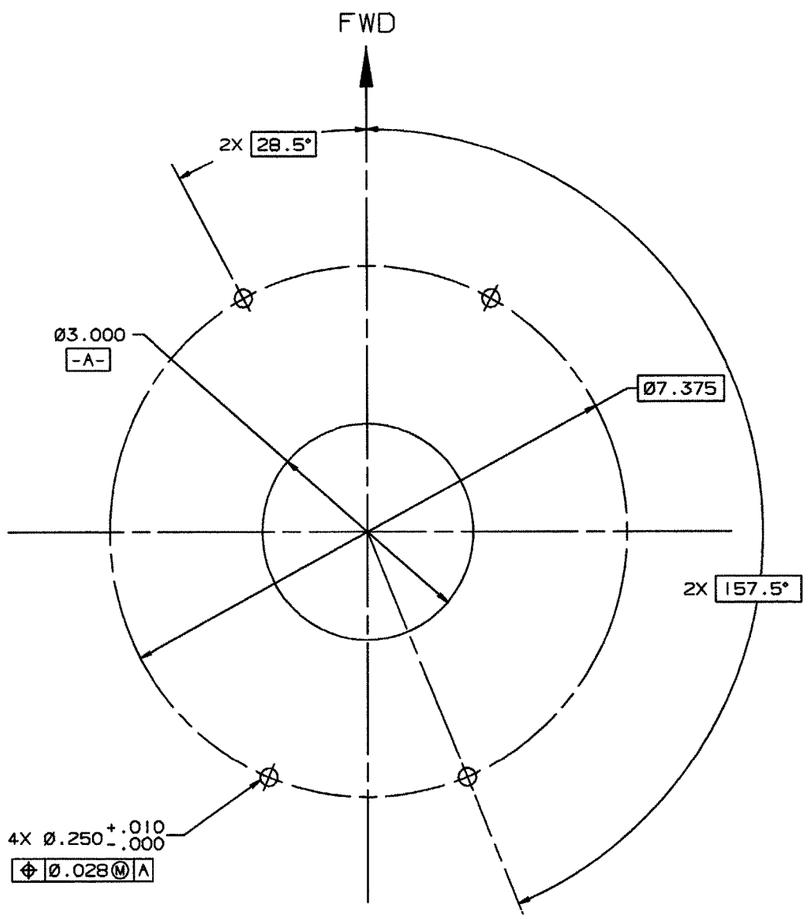

RECOMMENDED MOUNTING PATTERN

THIS CONFIGURATION IS FOR 7514081-901, 908 AND 913
THIS CONFIGURATION IS ALSO ACCEPTABLE FOR 7514060-901
AND -902, IF INSTALLED PER NOTE 11.

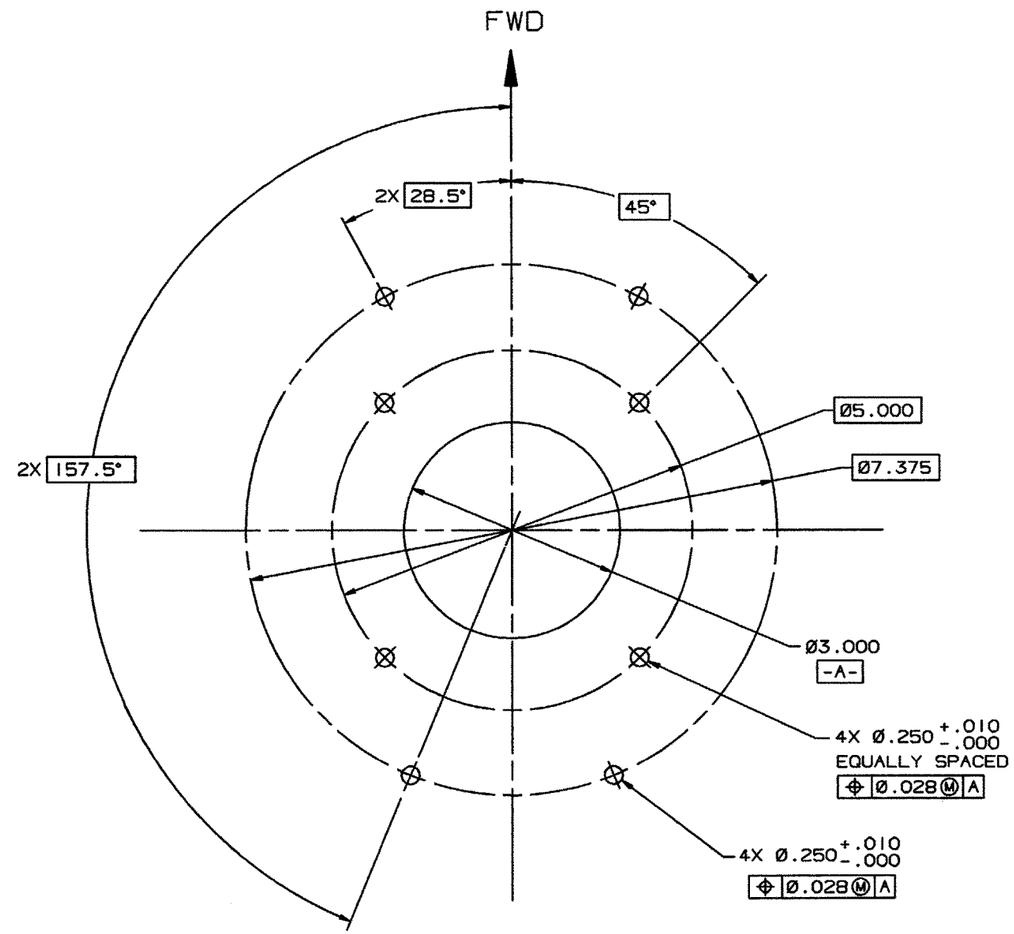

RECOMMENDED MOUNTING PATTERN

THIS CONFIGURATION IS FOR 7514081-902 THRU -907, -909 THRU -912, AND -914 THRU -917
THIS CONFIGURATION IS ALSO ACCEPTABLE FOR 7514060-901
AND -902, IF INSTALLED PER NOTE 11.

ID-8000596 E7514096-5-R

Figure 2-12 (Sheet 5). Directional Antenna Outline and Installation Diagram

Use or disclosure of information on this page is subject to the restrictions in the proprietary notice of this document.

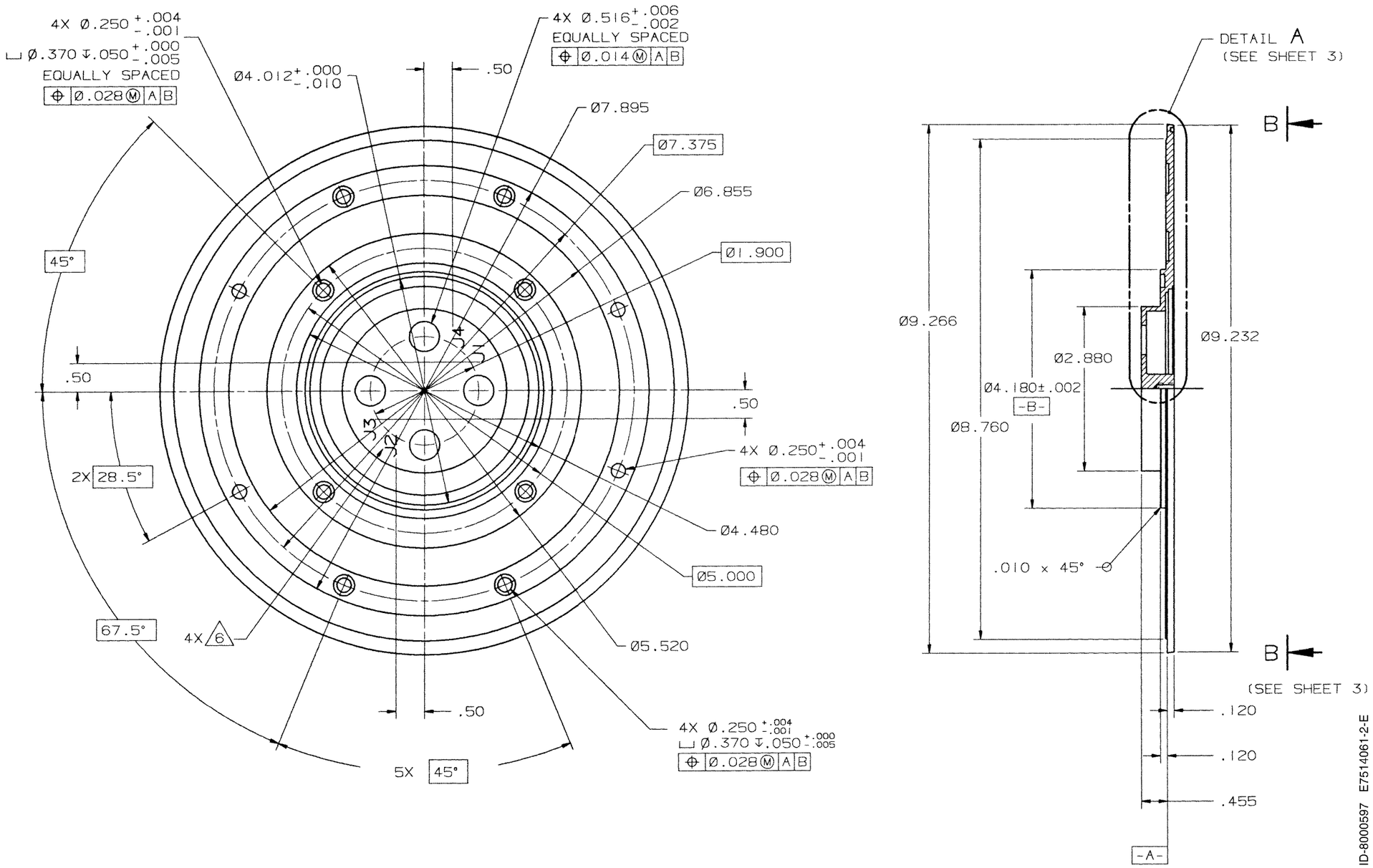

Figure 2-13 (Sheet 1). Directional Antenna Baseplate Outline and Installation Diagram

Use or disclosure of information on this page is subject to the restrictions in the proprietary notice of this document.