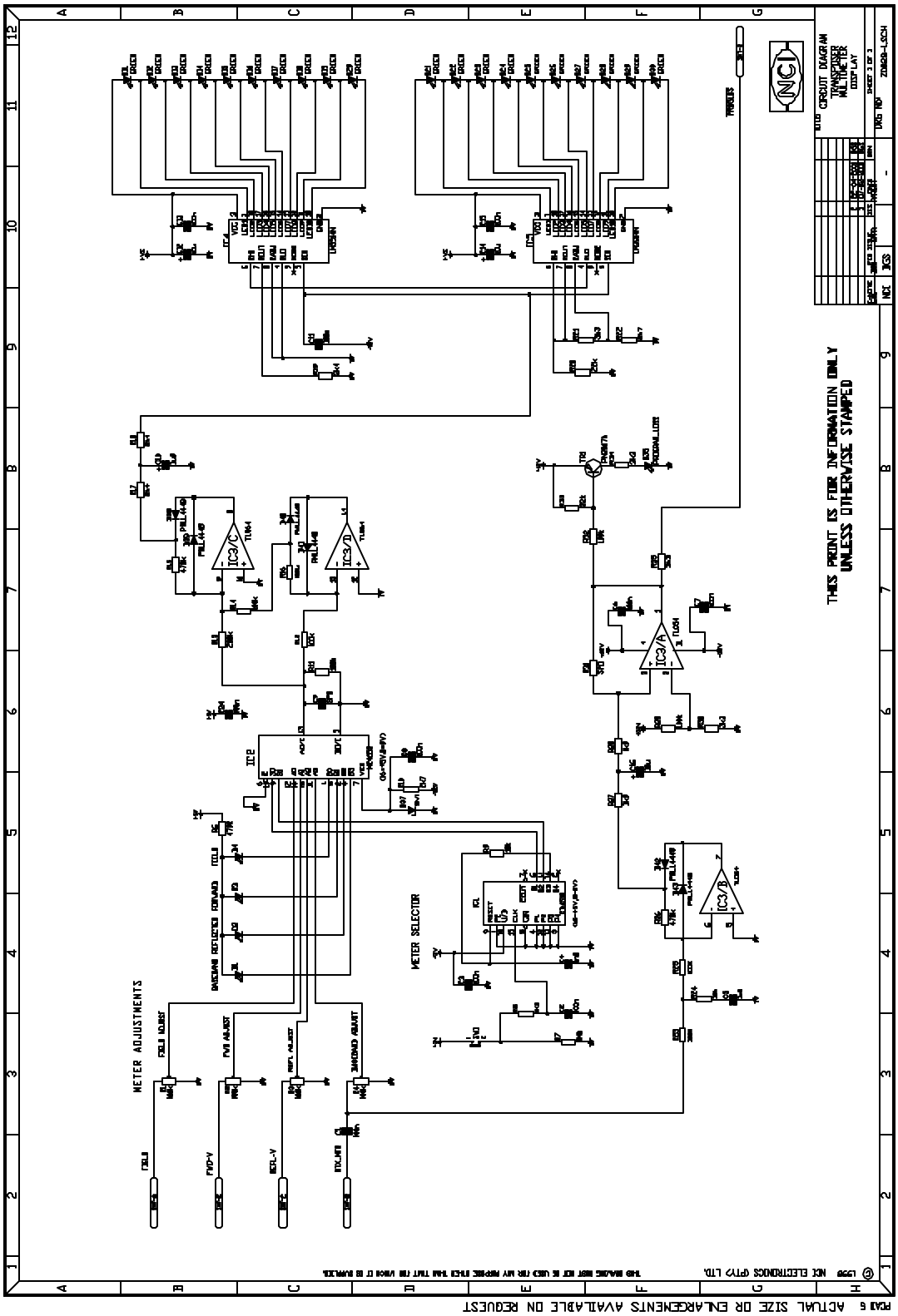
METER ADJUSTMENTS
METER SELECTOR
THESE PRINT IS FOR INFORMATION ONLY
UNLESS OTHERWISE STAMPED
ACTUAL SIZE OR ENLARGEMENTS AVAILABLE ON REQUEST

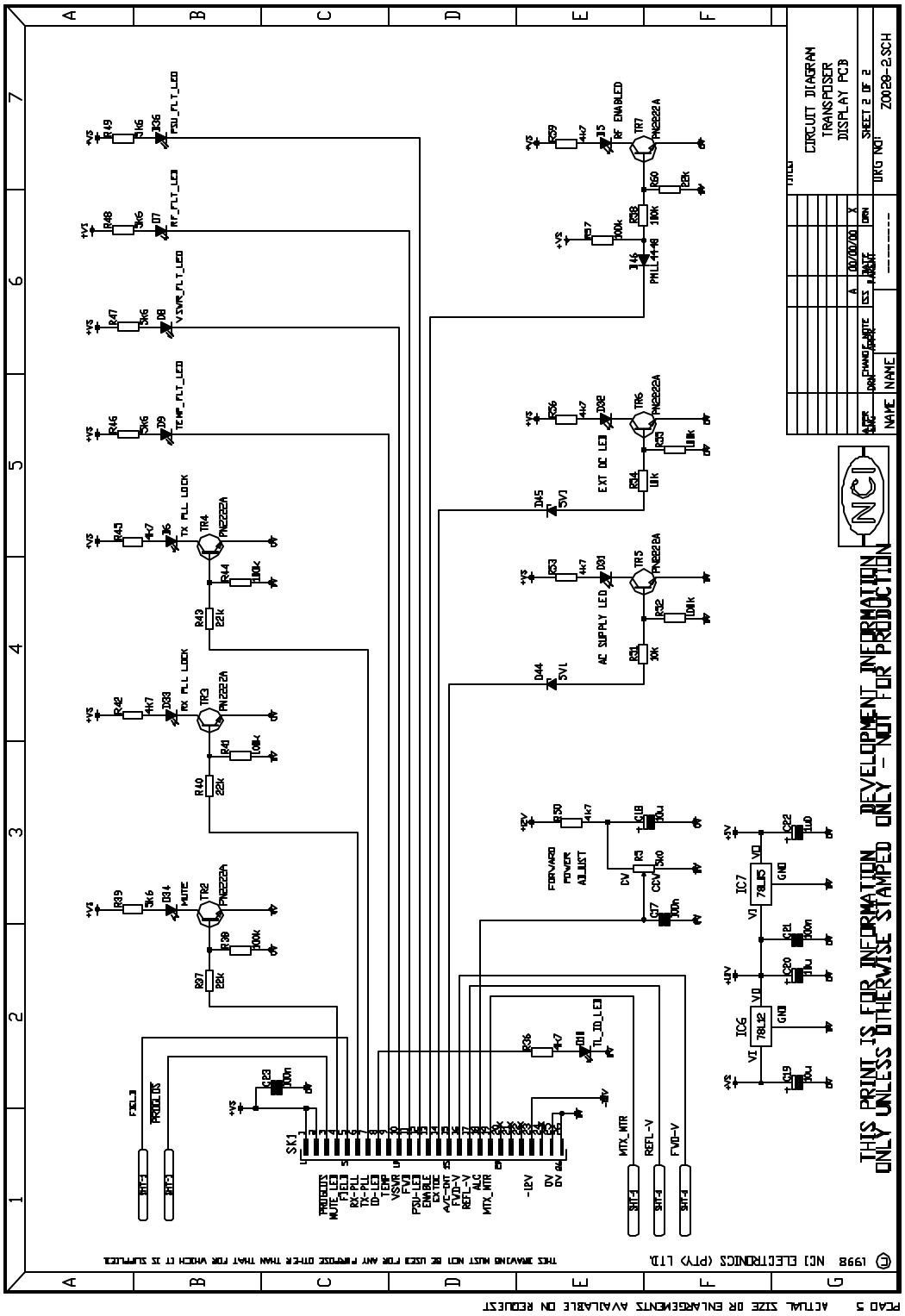

654Z0028.DWG

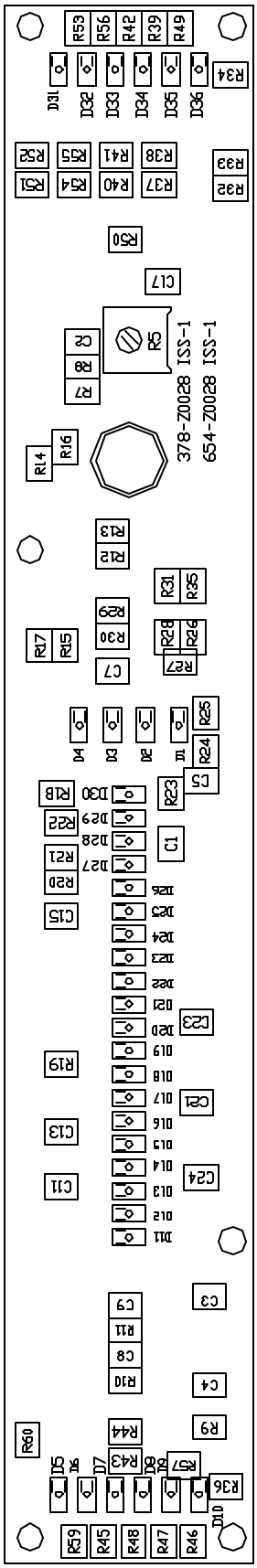
654Z0028.DWG
COMPONENT SIDE
378-Z0028 ISS-1
654-Z0028 ISS-1

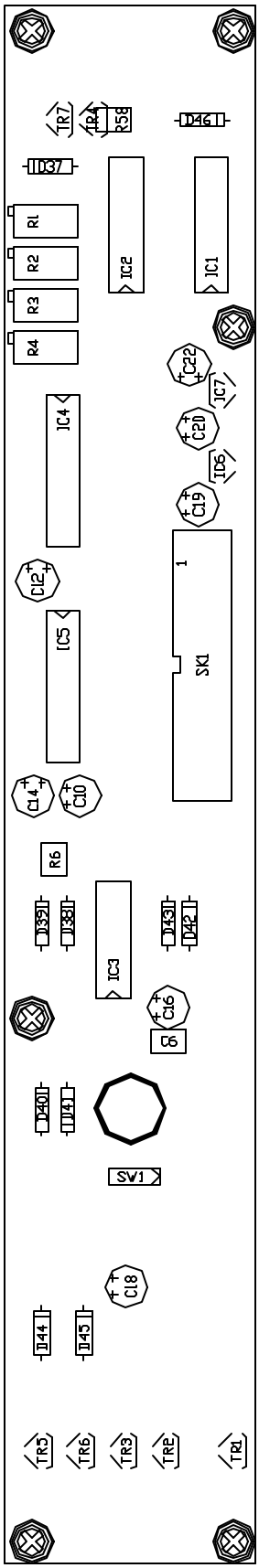
654Z0028.DWG
SOLDER SIDE

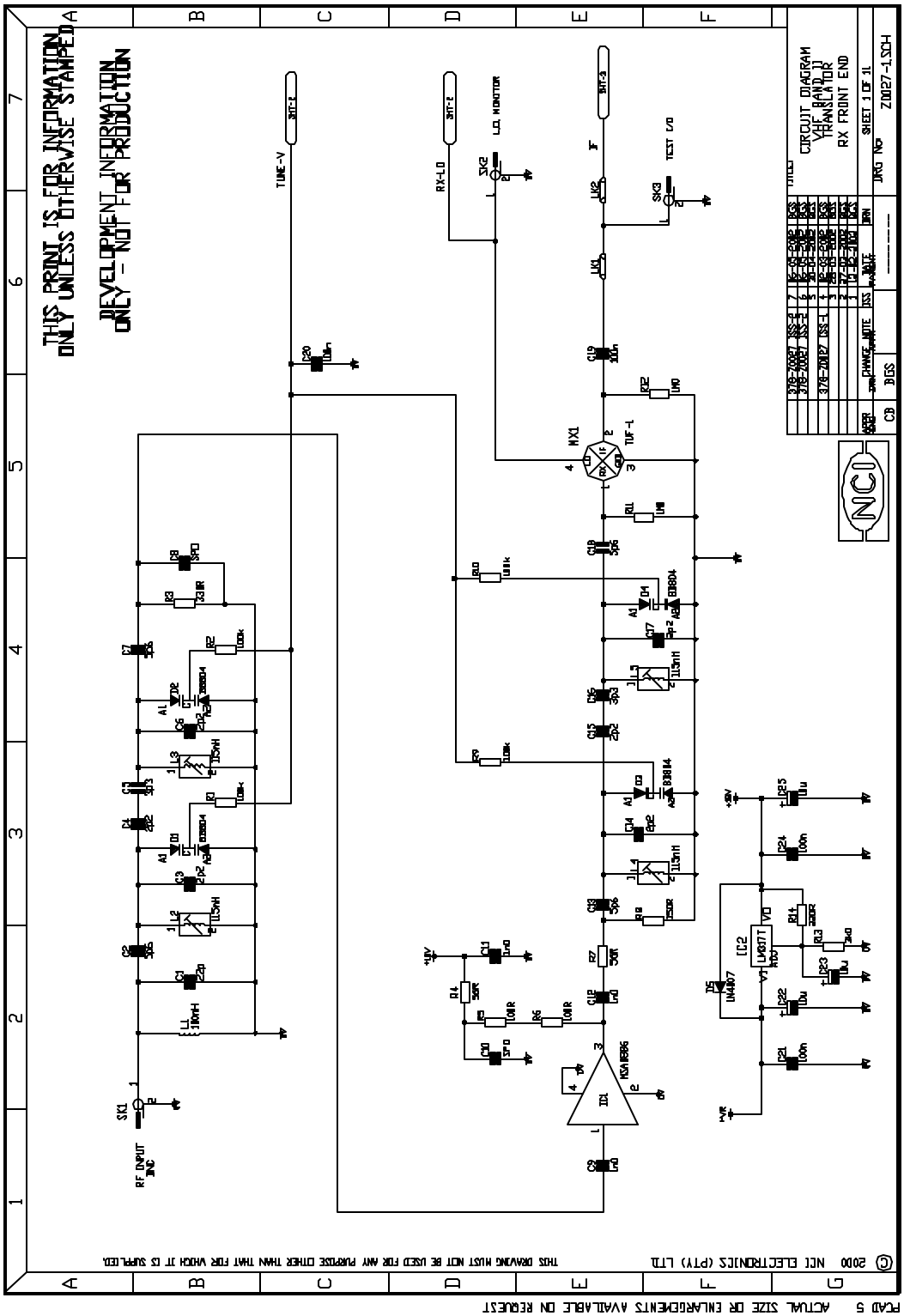
654Z0027.DWG
THIS PRINT IS FOR INFORMATION ONLY UNLESS OTHERWISE STAMPED
DEVELOPMENT INFORMATION ONLY - NOT FOR PRODUCTION
CIRCUIT DIAGRAM VHF BAND II TRANSLATOR RX FRONT END
SHEET 1 OF 1
DRG NO Z0027-1.SCH
NCI
© 2000 NCI ELECTRONICS (PTY) LTD
THIS DRAWING MUST NOT BE USED FOR ANY PURPOSE OTHER THAN THAT FOR WHICH IT IS SUPPLIED.
PCAD 5 ACTUAL SIZE OR ENLARGEMENTS AVAILABLE ON REQUEST

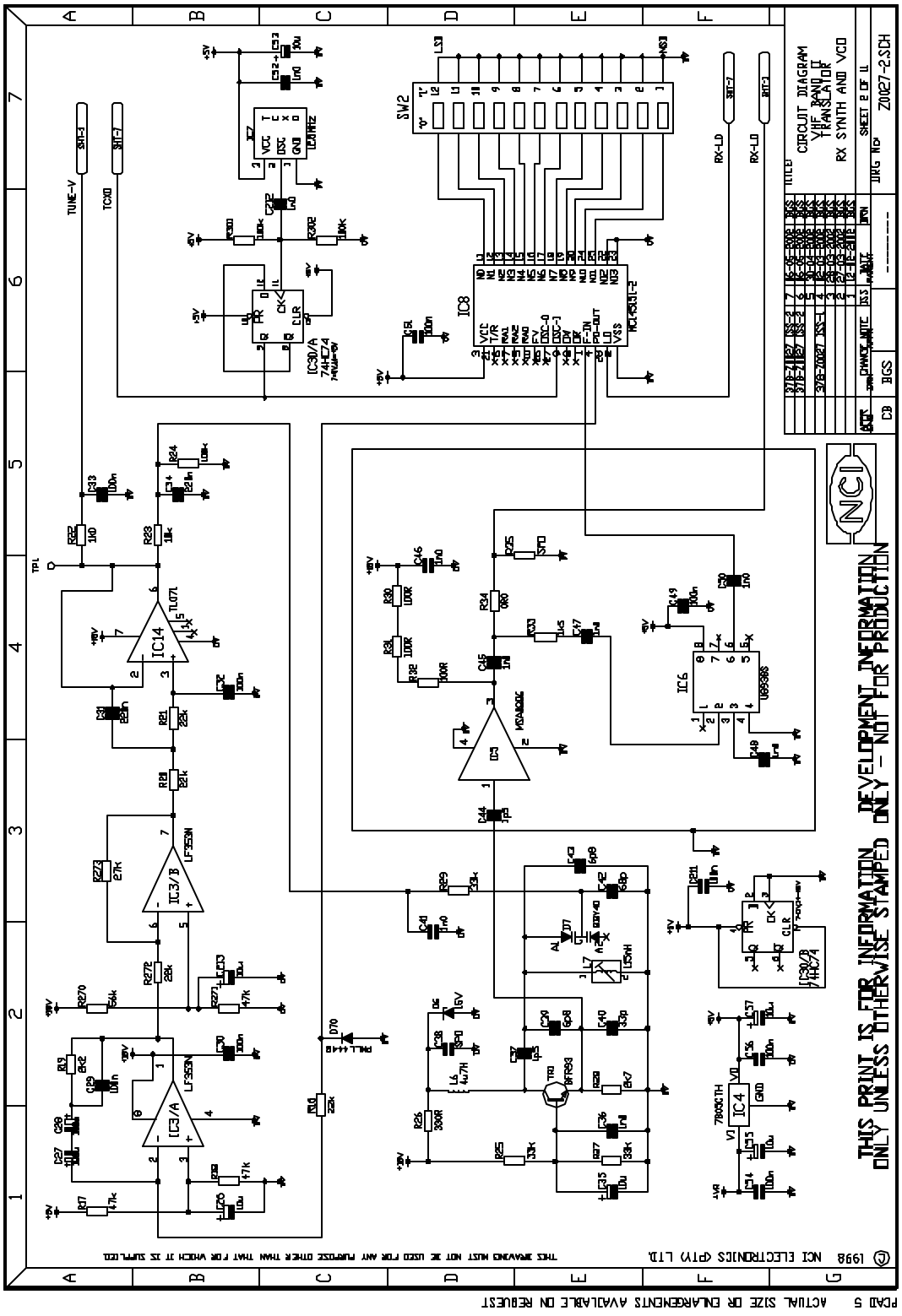
654Z0027.DWG
CIRCUIT DIAGRAM
VHF BAND II
TRANSLATOR
RX SYNTH AND VCO
SHEET 2 OF 11
DRG NO Z0027-2.SCH
THIS PRINT IS FOR INFORMATION DEVELOPMENT INFORMATION
ONLY UNLESS OTHERWISE STAMPED ONLY - NOT FOR PRODUCTION
© 1998 NCI ELECTRONICS (PTY) LTD.
THIS DRAWING MUST NOT BE USED FOR ANY PURPOSE OTHER THAN THAT FOR WHICH IT IS SUPPLIED
PCAD 5 ACTUAL SIZE OR ENLARGEMENTS AVAILABLE ON REQUEST

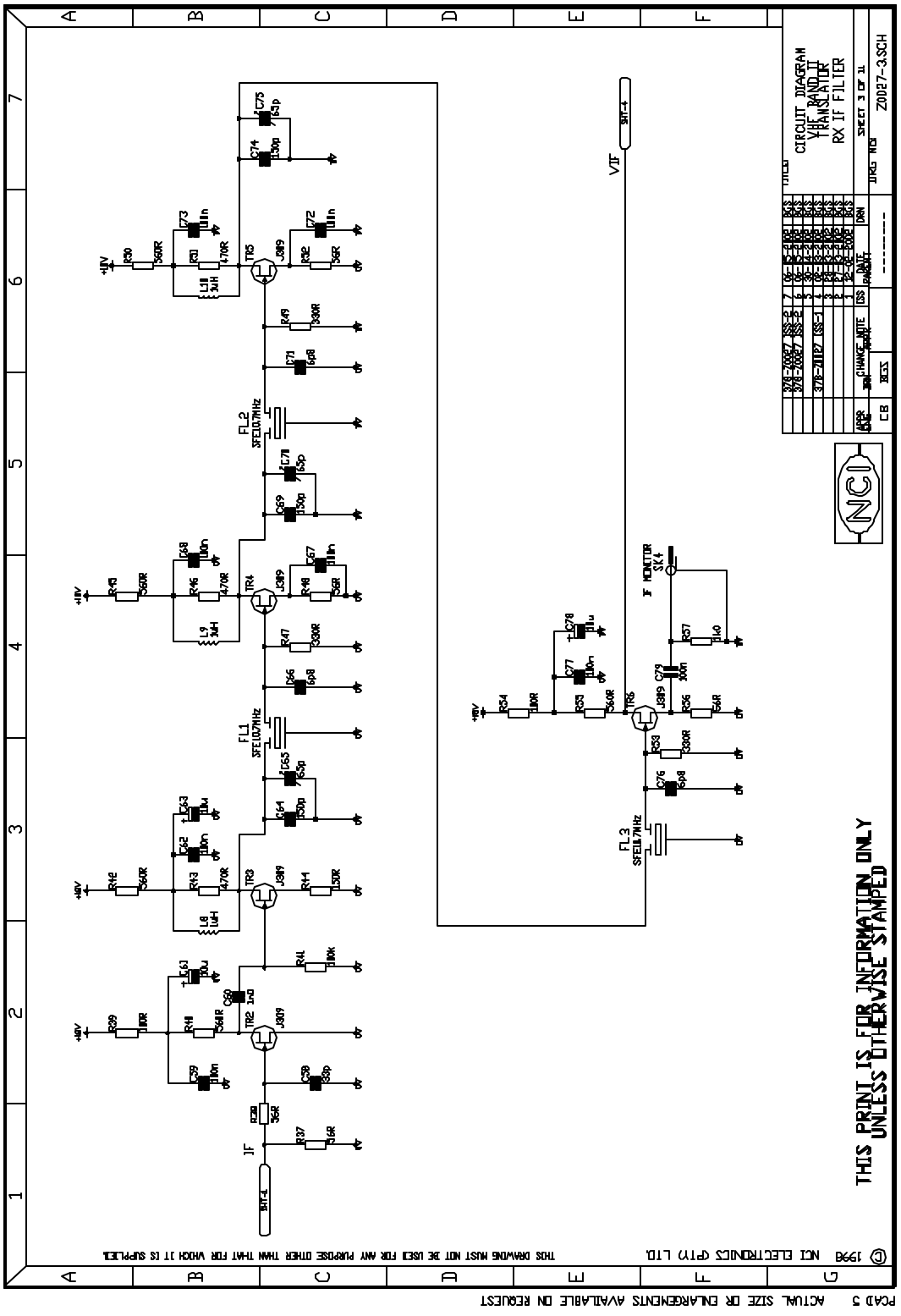
654Z0027.DWG
CIRCUIT DIAGRAM
VHF BAND II
TRANSLATOR
RX IF FILTER
Z0027-3.SCH
SHEET 3 OF 11
THIS PRINT IS FOR INFORMATION ONLY
UNLESS OTHERWISE STAMPED
© 1998 NCI ELECTRONICS (PTY) LTD.
THIS DRAWING MUST NOT BE USED FOR ANY PURPOSE OTHER THAN THAT FOR WHICH IT IS SUPPLIED.
ACTUAL SIZE OR ENLARGEMENTS AVAILABLE ON REQUEST
PCAD 5

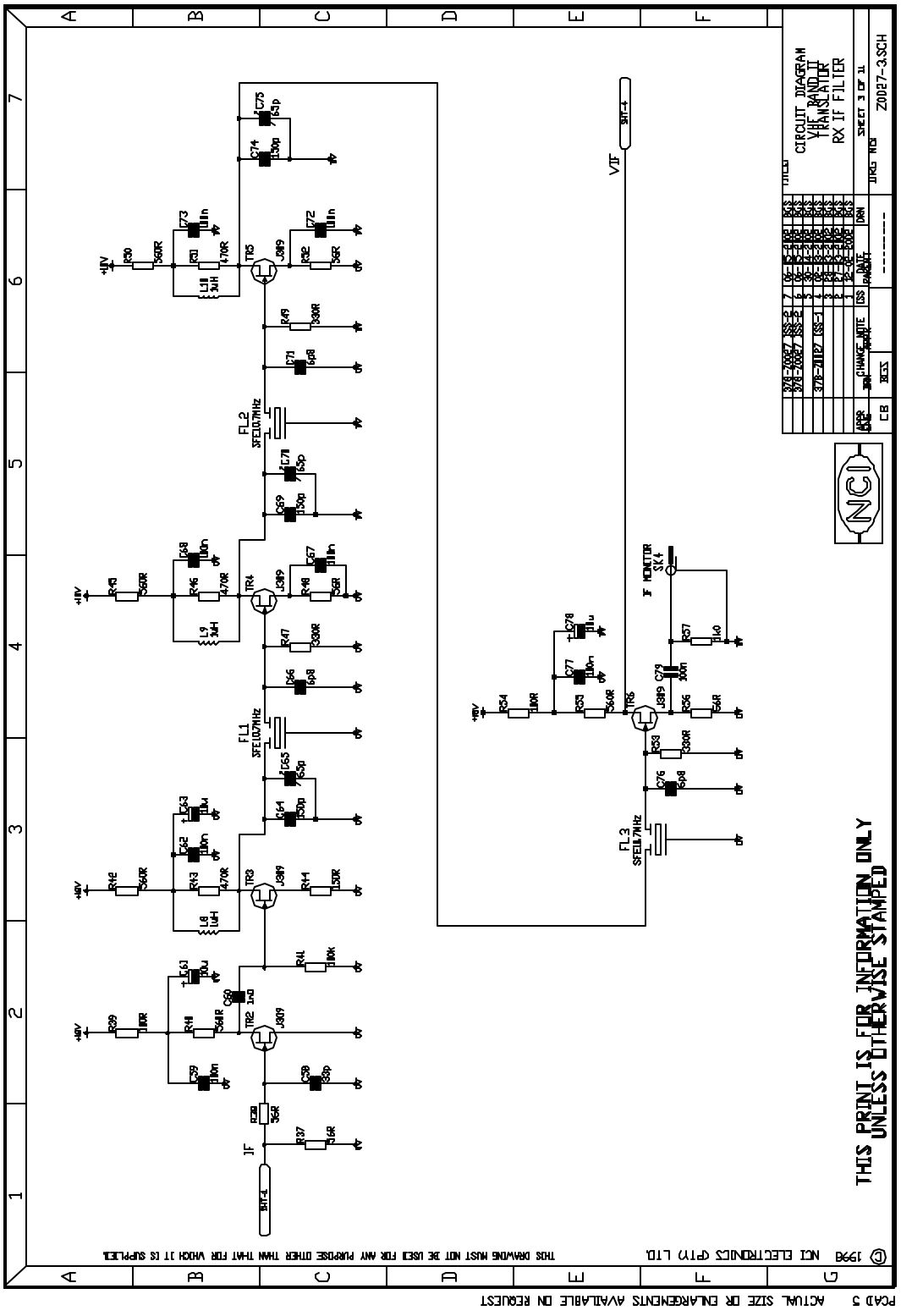
654Z0027.DWG
CIRCUIT DIAGRAM
VHF BAND II
TRANSLATOR
RX IF FILTER
Z0027-3.SCH
SHEET 3 OF 11
THIS PRINT IS FOR INFORMATION ONLY
UNLESS OTHERWISE STAMPED
© 1998 NCI ELECTRONICS (PTY) LTD.
THIS DRAWING MUST NOT BE USED FOR ANY PURPOSE OTHER THAN THAT FOR WHICH IT IS SUPPLIED.
ACTUAL SIZE OR ENLARGEMENTS AVAILABLE ON REQUEST
PCAD 5

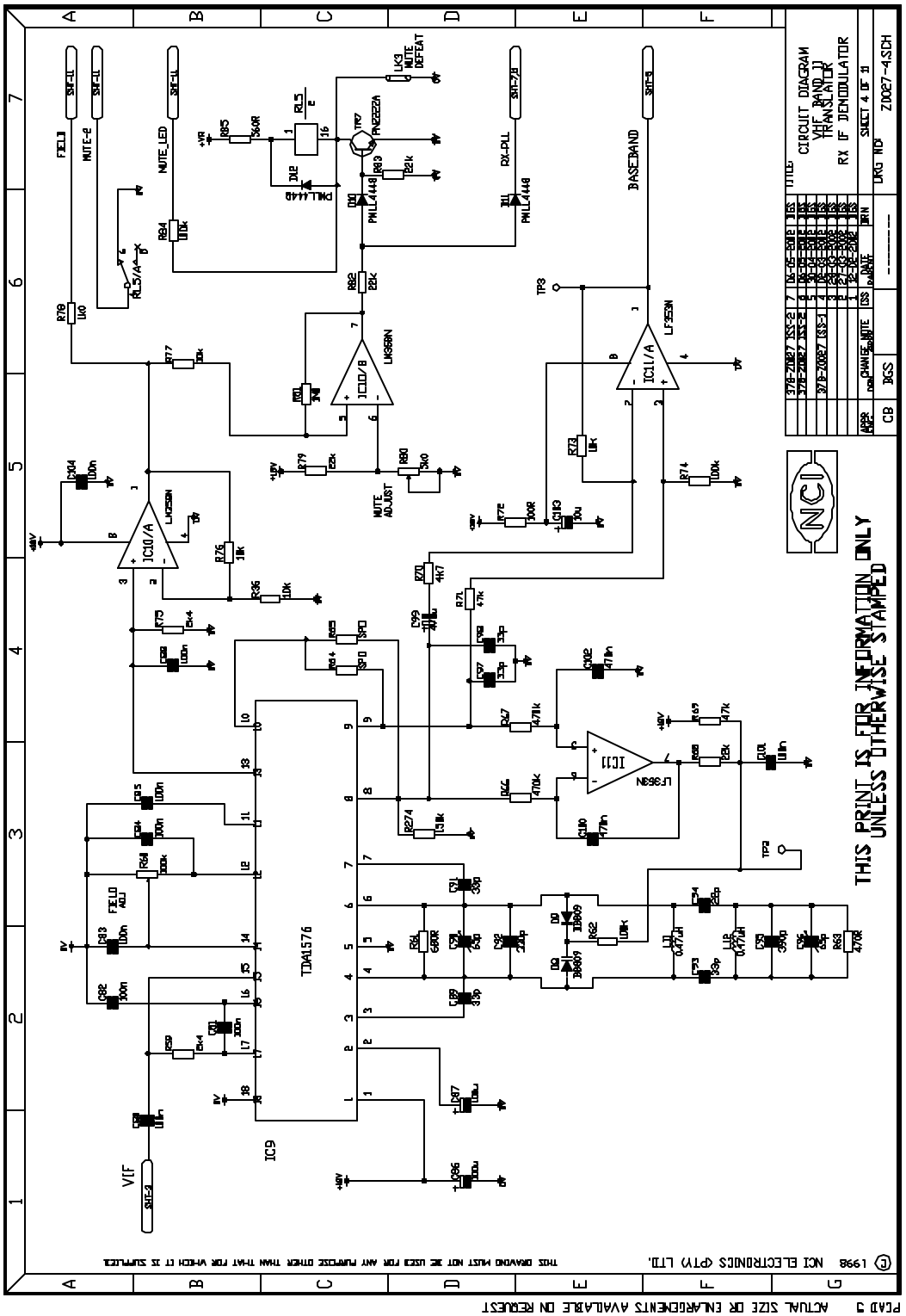
654Z0027.DWG
THIS PRINT IS FOR INFORMATION ONLY
UNLESS OTHERWISE STAMPED
CIRCUIT DIAGRAM
VHF BAND III
TRANSLATOR
RX IF DEMODULATOR
SHEET 4 OF 11
DRG NO 2Z0027-4.SCH
TDA1576
IC9
IC10/A
IC10/B
IC11/A
IC11
LM386N
LF353N
LF356N
VIF
MUTE ADJUST
FIELD ADJ
BASEBAND
MUTE_LED
MUTE DEFEAT
PWLL4448
BB809
© 1998 NCI ELECTRONICS (PTY) LTD.
THIS DRAWING MUST NOT BE USED FOR ANY PURPOSE OTHER THAN THAT FOR WHICH IT IS SUPPLIED
ACTUAL SIZE OR ENLARGEMENTS AVAILABLE ON REQUEST

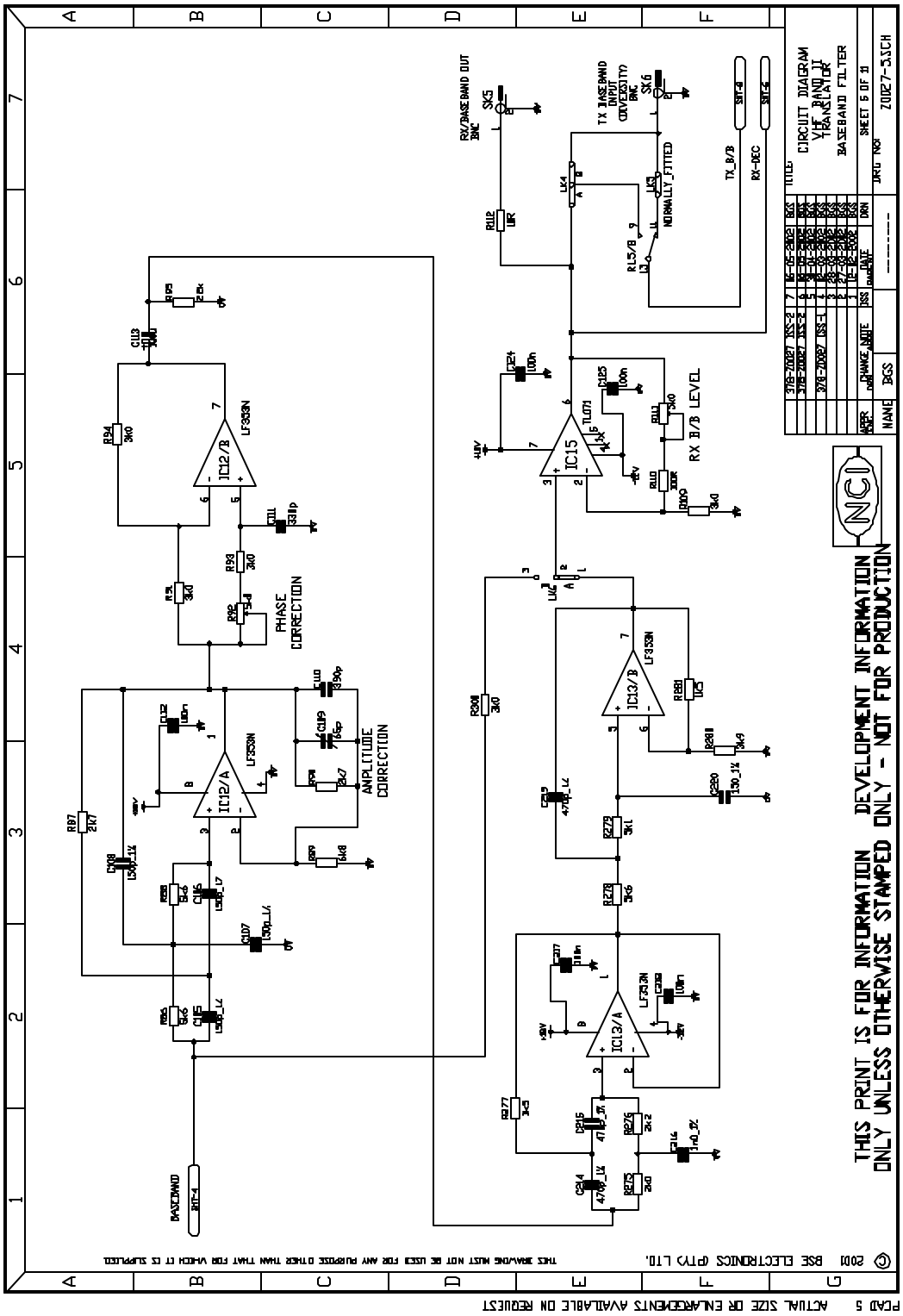
654Z0027.DWG
THIS PRINT IS FOR INFORMATION DEVELOPMENT INFORMATION
ONLY UNLESS OTHERWISE STAMPED ONLY - NOT FOR PRODUCTION
CIRCUIT DIAGRAM
VHF BAND II
TRANSLATOR
BASEBAND FILTER
SHEET 6 OF 11
20027-5.SCH
PHASE CORRECTION
AMPLITUDE CORRECTION
RX B/B LEVEL
RX/BASEBAND OUT
TX BASEBAND INPUT
NORMALLY_FITTED
BASEBAND
IC12/B
IC12/A
IC13/B
IC13/A
IC15
LF353N
TL071
TX_B/B
RX-DEC
ACTUAL SIZE OR ENLARGEMENTS AVAILABLE ON REQUEST
PCAD 5
© 2001 BSE ELECTRONICS (PTY) LTD.

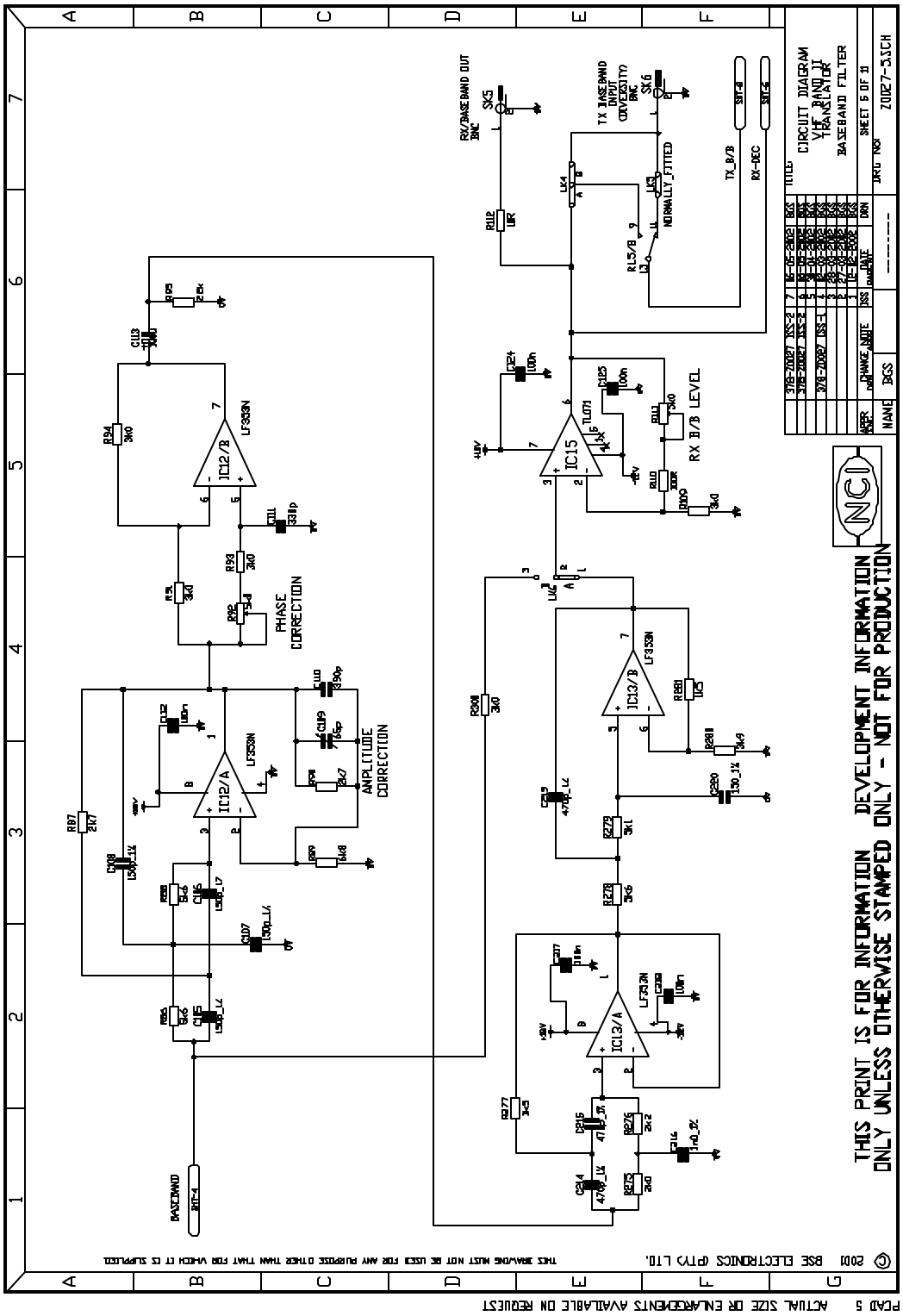
654Z0027.DWG
THIS PRINT IS FOR INFORMATION DEVELOPMENT INFORMATION
ONLY UNLESS OTHERWISE STAMPED ONLY - NOT FOR PRODUCTION
CIRCUIT DIAGRAM
VHF BAND II
TRANSLATOR
BASEBAND FILTER
SHEET 6 OF 11
20027-5.SCH
PHASE CORRECTION
AMPLITUDE CORRECTION
RX B/B LEVEL
RX/BASEBAND OUT
TX BASEBAND INPUT
NORMALLY_FITTED
BASEBAND
IC12/B
IC12/A
IC13/B
IC13/A
IC15
LF353N
TL071
TX_B/B
RX-DEC
ACTUAL SIZE OR ENLARGEMENTS AVAILABLE ON REQUEST
PCAD 5
© 2001 BSE ELECTRONICS (PTY) LTD.

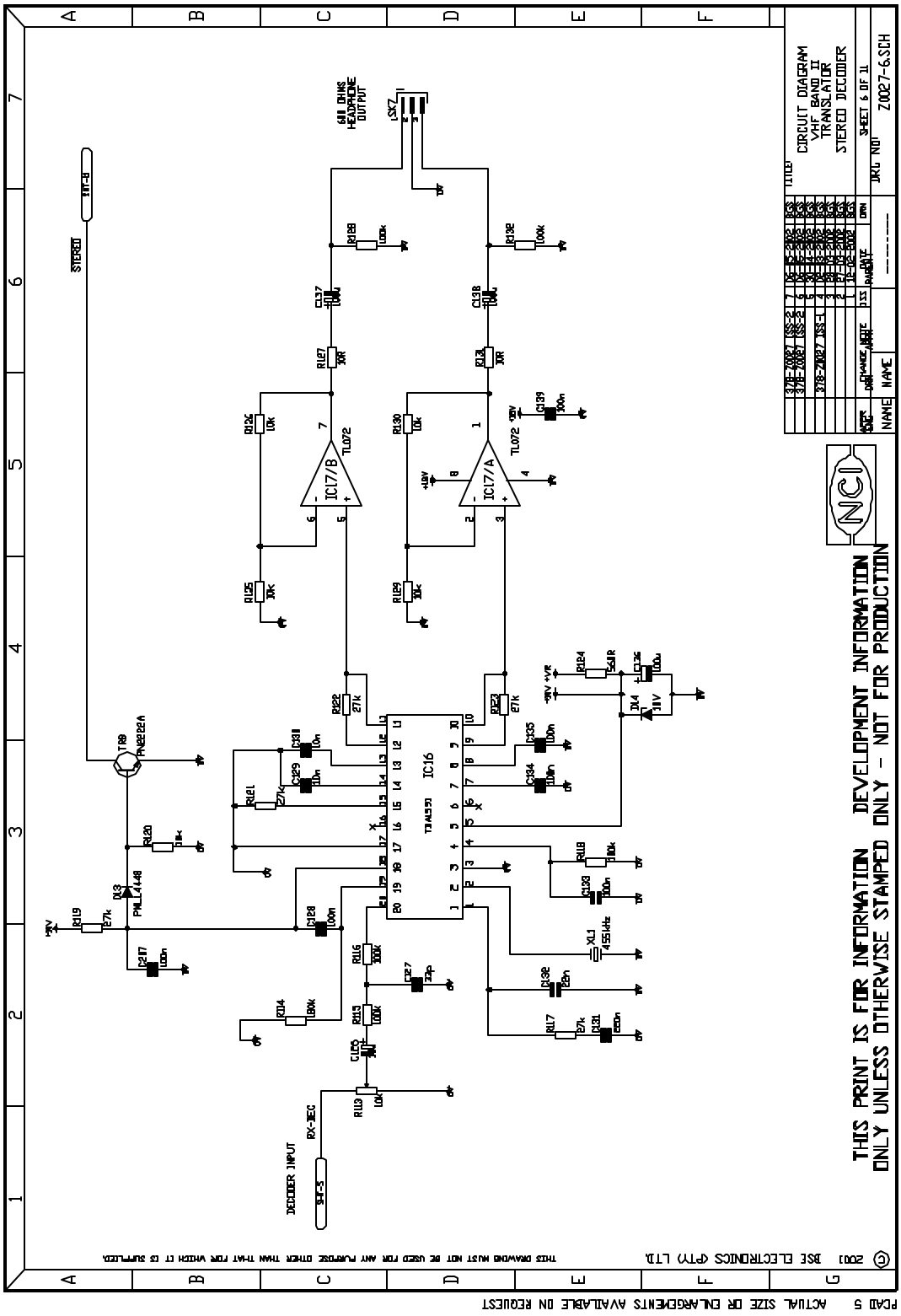
654Z0027.DWG
THIS PRINT IS FOR INFORMATION DEVELOPMENT INFORMATION
ONLY UNLESS OTHERWISE STAMPED ONLY - NOT FOR PRODUCTION
CIRCUIT DIAGRAM
VHF BAND II
TRANSLATOR
STEREO DECODER
SHEET 6 OF 11
DRG NO 2002-6.SCH
IC17/B TL072
IC17/A TL072
IC16
STEREO
DECODER INPUT
RX-MIC
PMLL4148
XTAL
455kHz
© 2001 BSE ELECTRONICS (PTY) LTD.
THIS DRAWING MUST NOT BE USED FOR ANY PURPOSE OTHER THAN THAT FOR WHICH IT IS SUPPLIED.
PCAD 5 ACTUAL SIZE OR ENLARGEMENTS AVAILABLE ON REQUEST

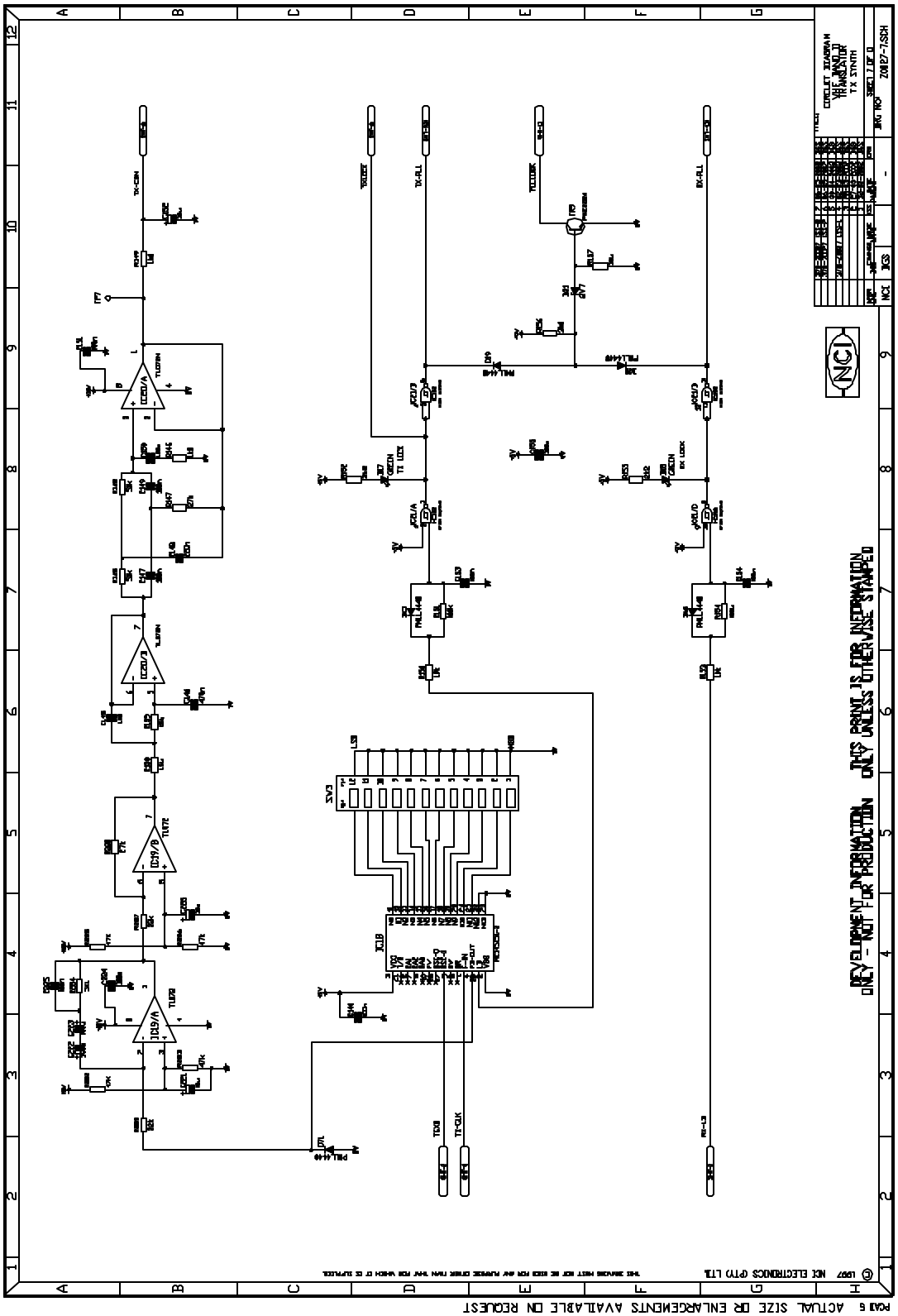

654Z0027.DWG

Issue 1A:

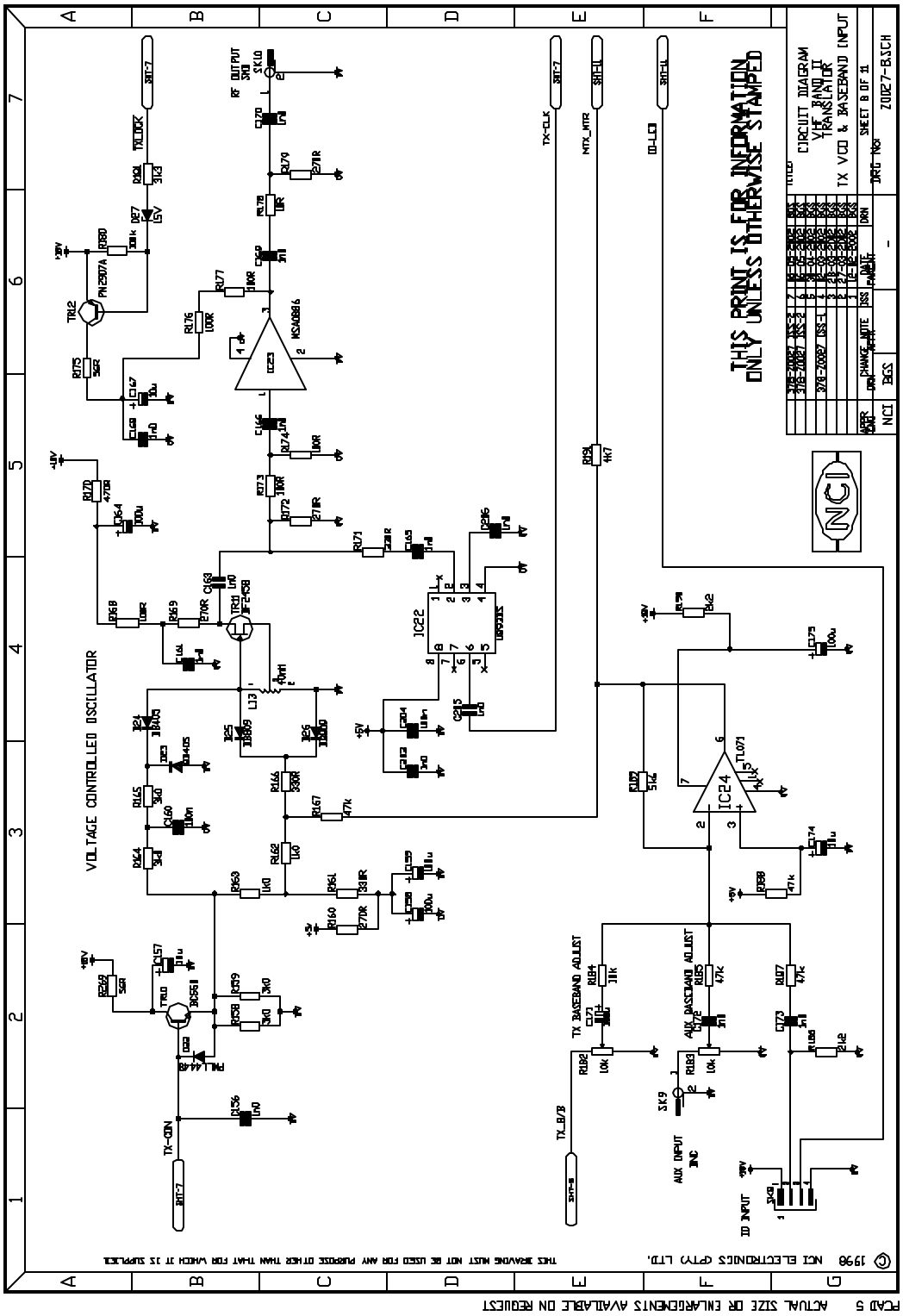

654Z0027.DWG

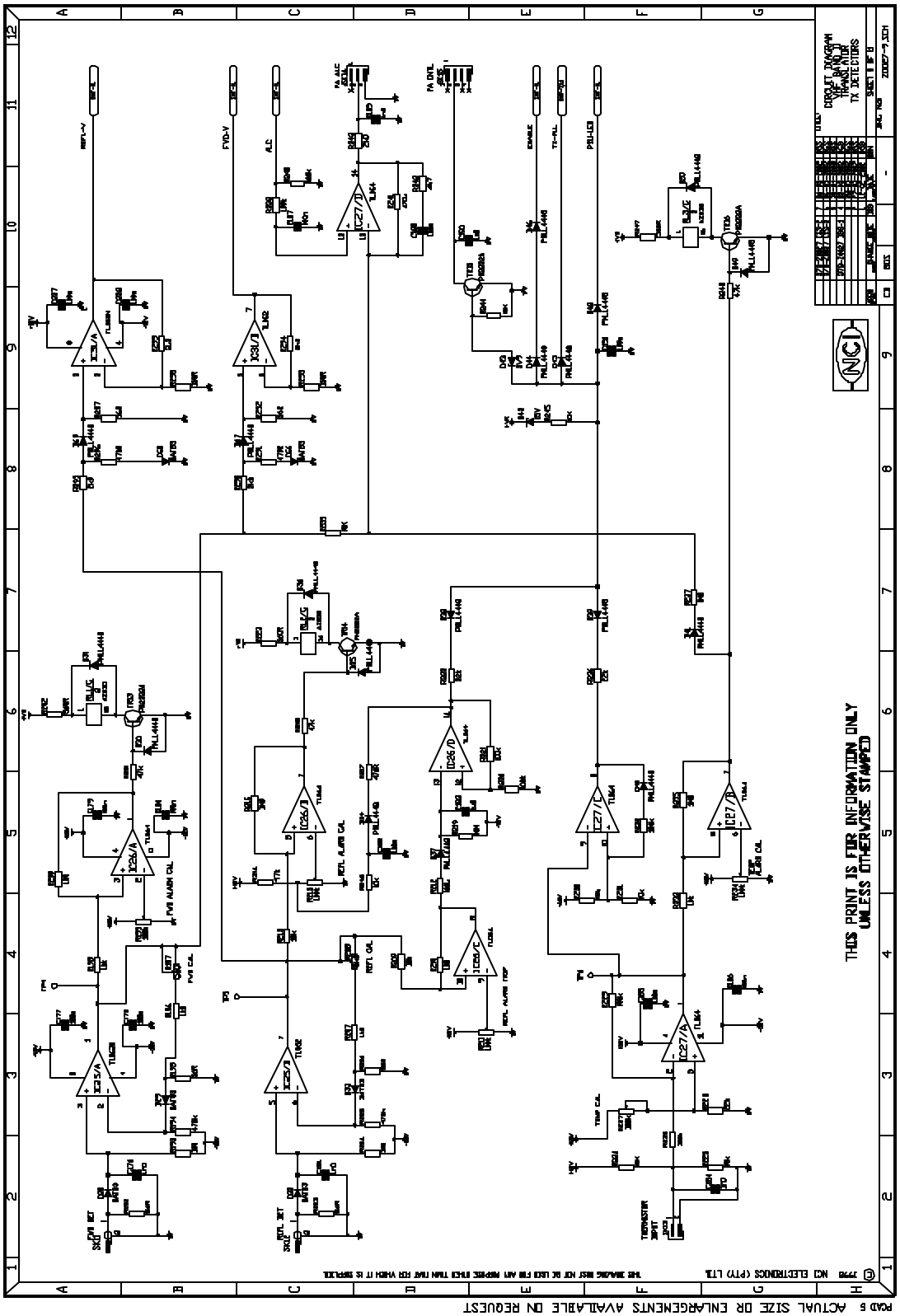
THIS PRINT IS FOR INFORMATION ONLY
UNLESS OTHERWISE STAMPED
854Z0027.DWG

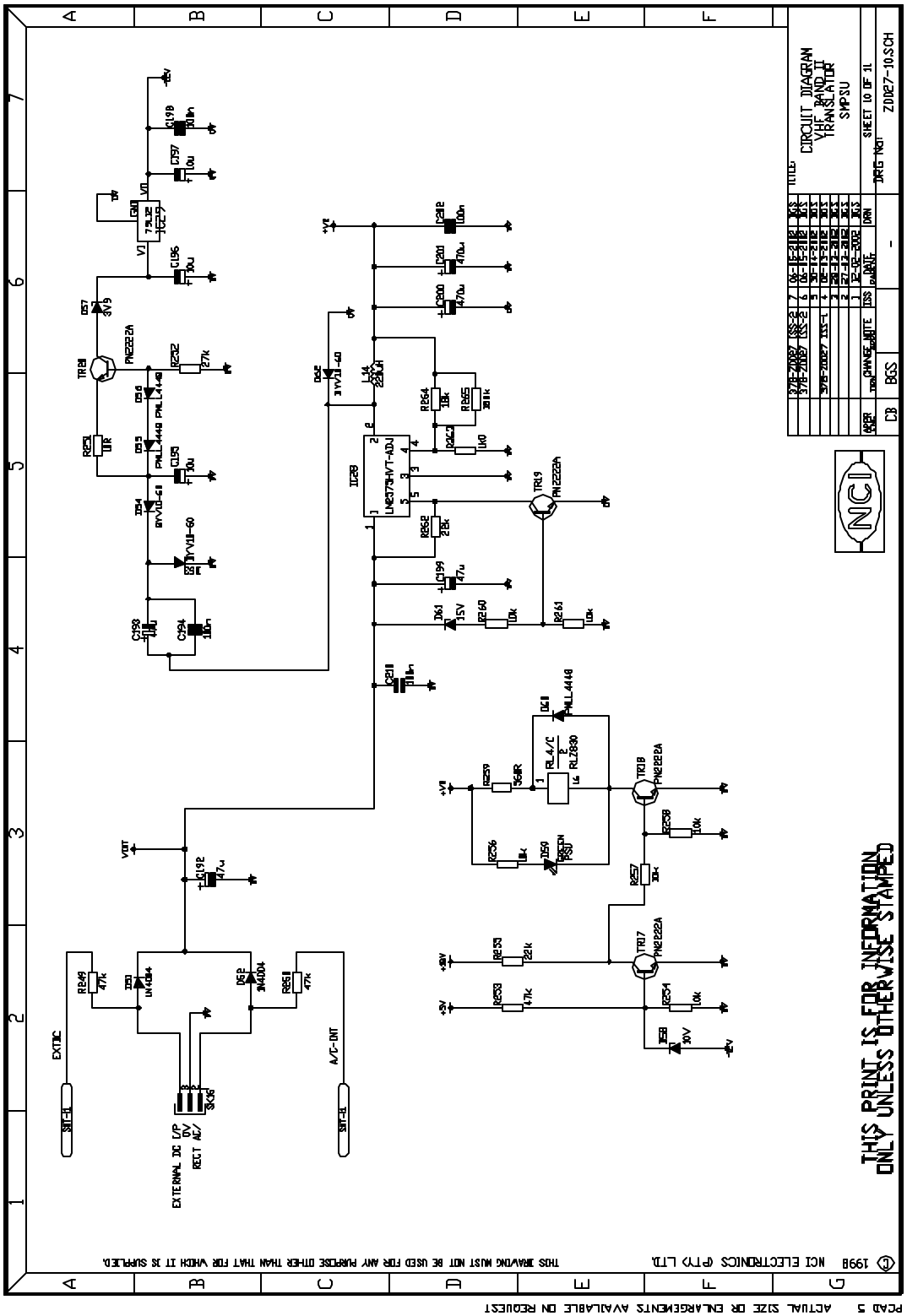
654Z0027.DWG
CIRCUIT DIAGRAM
VHF BAND II
TRANSLATOR
SMPSU
SHEET 10 OF 31
Z0027-10.SCH
NCI
THIS PRINT IS FOR INFORMATION
ONLY UNLESS OTHERWISE STAMPED
© 1998 NCI ELECTRONICS (PTY) LTD.
THIS DRAWING MUST NOT BE USED FOR ANY PURPOSE OTHER THAN THAT FOR WHICH IT IS SUPPLIED.
PCAD 5 ACTUAL SIZE OR ENLARGEMENTS AVAILABLE ON REQUEST

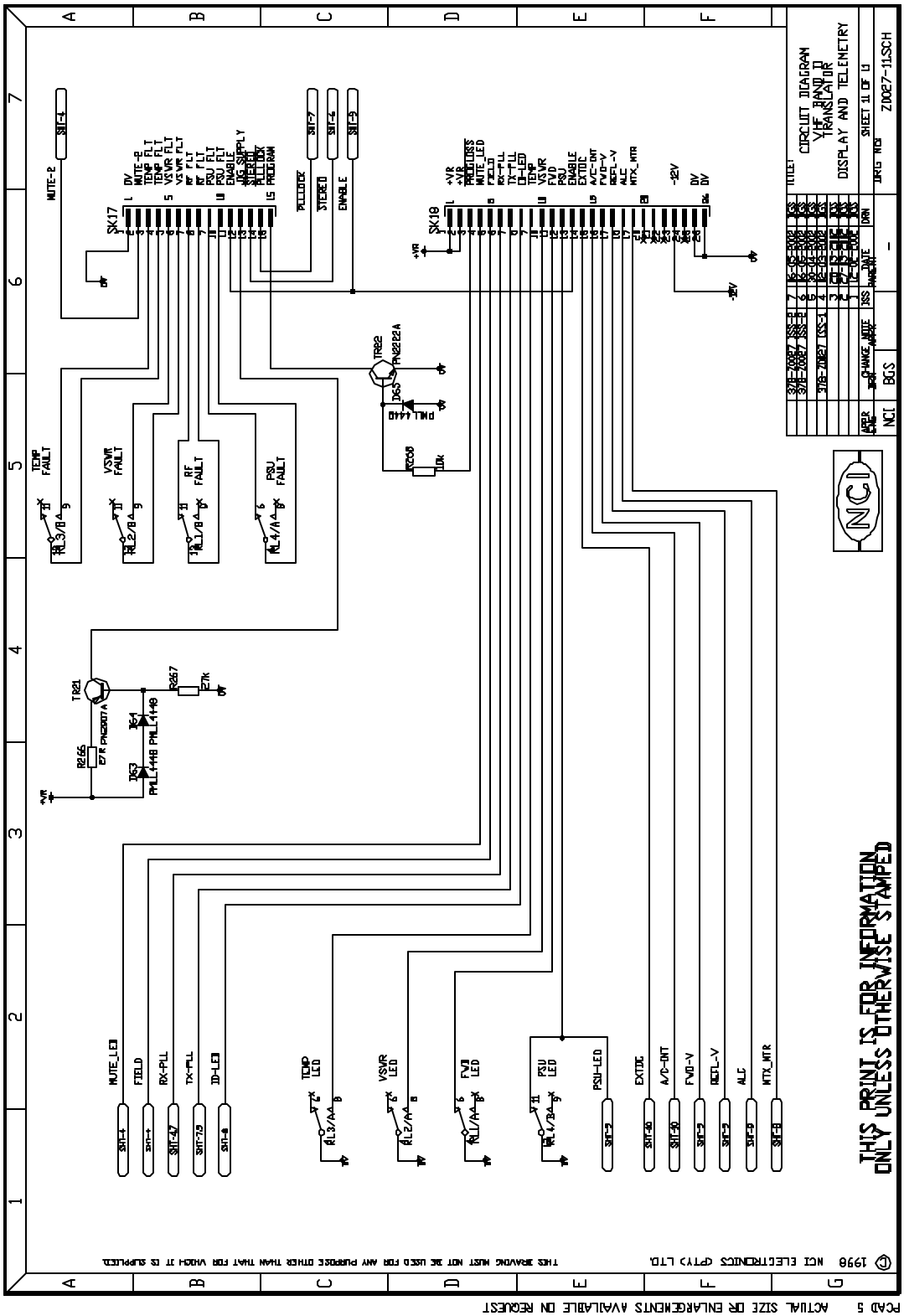
654Z0027.DWG
CIRCUIT DIAGRAM
VHF BAND II TRANSLATOR
DISPLAY AND TELEMETRY
SHEET 1 OF 1
Z0027-11SCH
THIS PRINT IS FOR INFORMATION ONLY UNLESS OTHERWISE STAMPED
ACTUAL SIZE OR ENLARGEMENTS AVAILABLE ON REQUEST
© 1998 NCI ELECTRONICS CPTY'S LTD.
THIS DRAWING MUST NOT BE USED FOR ANY PURPOSE OTHER THAN THAT FOR WHICH IT IS SUPPLIED.
SK17
SK18
MUTE-2
PLLLOCK
STEREO
ENABLE
TEMP FAULT
VSWR FAULT
RF FAULT
PSU FAULT
TR21
TR22
MUTE_LED
FIELD
RX-PLL
TX-PLL
ID-LED
TEMP LED
VSWR LED
FWD LED
PSU LED
PSU-LED
EXTDC
A/C-ONT
FWD-V
REFL-V
ALC
MTX_MTR
-12V
+12V

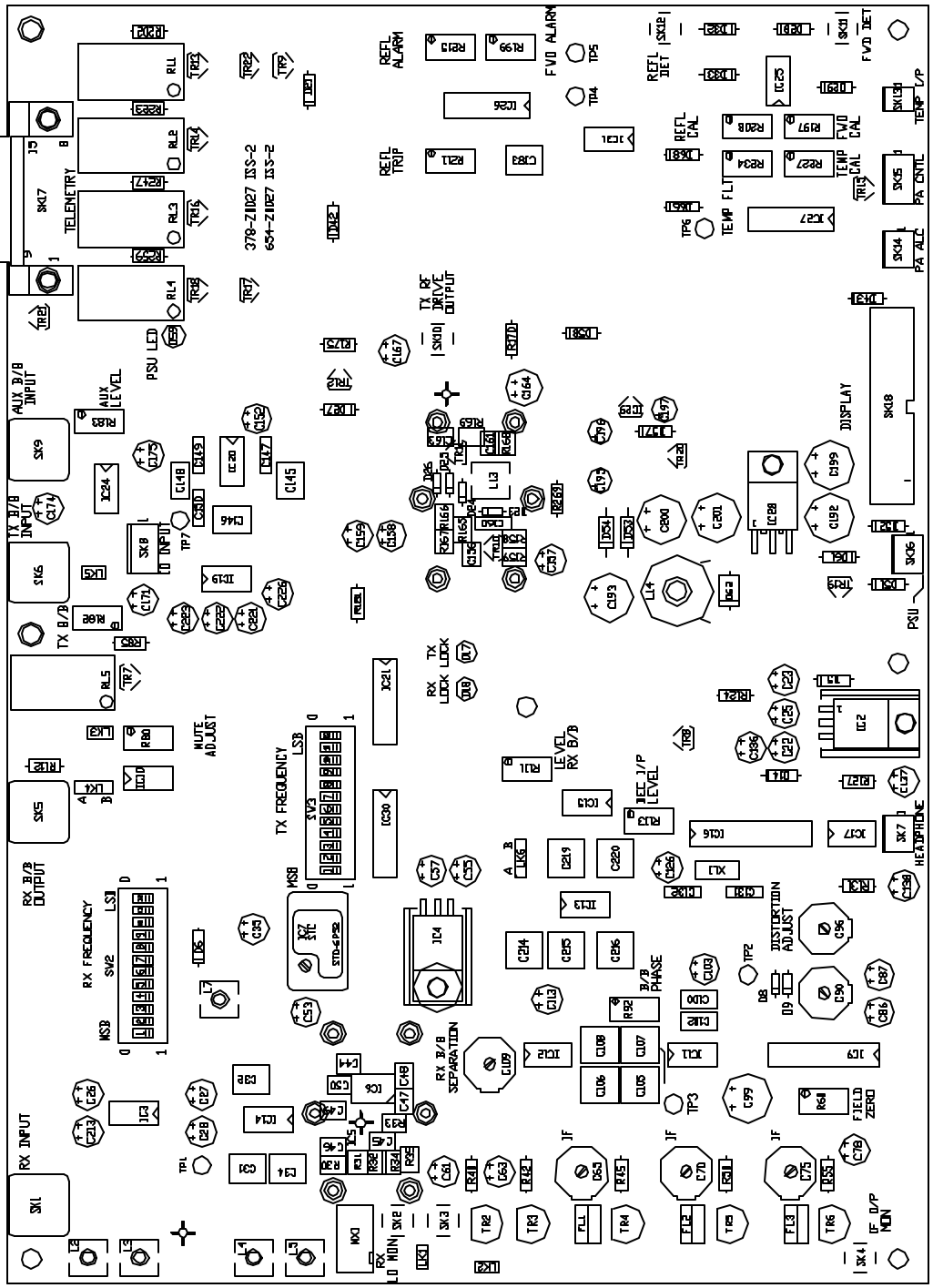

654Z0027.DWG

COMPONENT SIDE

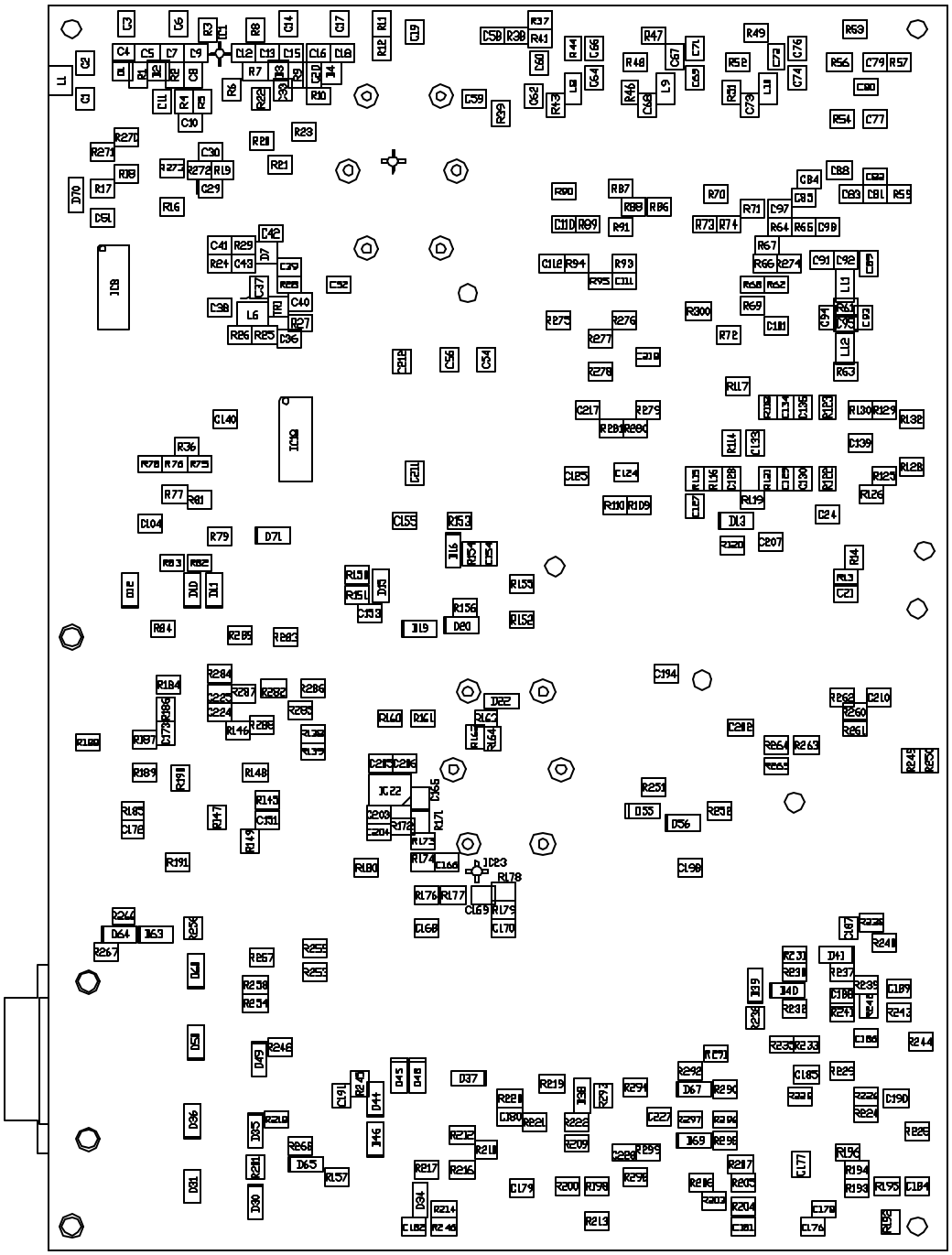

654Z0027.DWG

SOLDER SIDE

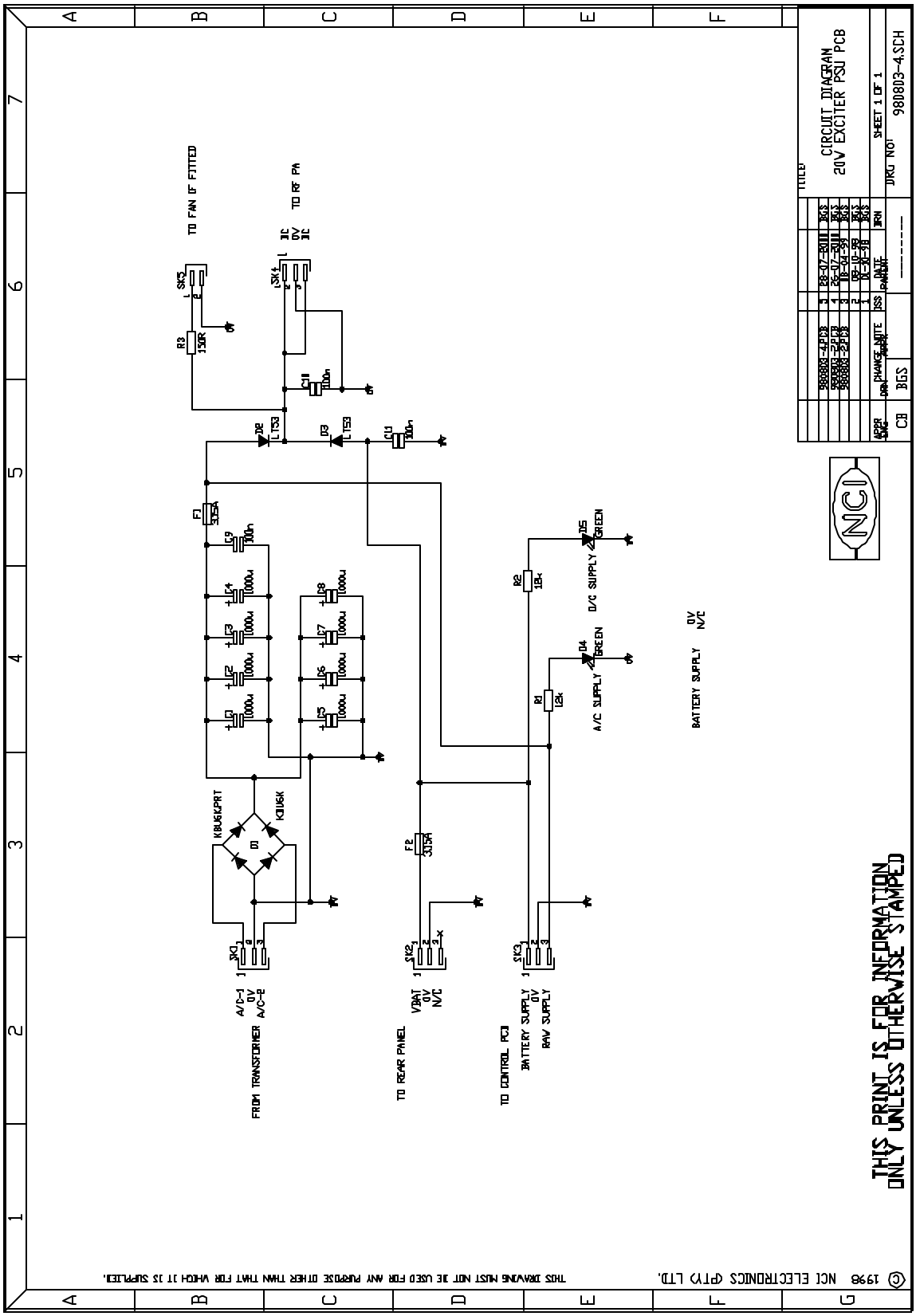
CIRCUIT DIAGRAM
20V EXCITER PSU PCB
SHEET 1 OF 1
DRG NO: 98D8D3-4.SCH
THIS PRINT IS FOR INFORMATION ONLY UNLESS OTHERWISE STAMPED
FROM TRANSFORMER
TO REAR PANEL
TO CONTROL PCB
BATTERY SUPPLY
A/C SUPPLY
D/C SUPPLY
TO FAN IF FITTED
TO RF PA
© 1998 NCI ELECTRONICS (PTY) LTD.
THIS DRAWING MUST NOT BE USED FOR ANY PURPOSE OTHER THAN THAT FOR WHICH IT IS SUPPLIED.
PCAD 5 ACTUAL SIZE OR ENLARGEMENTS AVAILABLE ON REQUEST

EX1 PSU PCB (FAN) 980803 ISS-4 COMPONENT SIDE

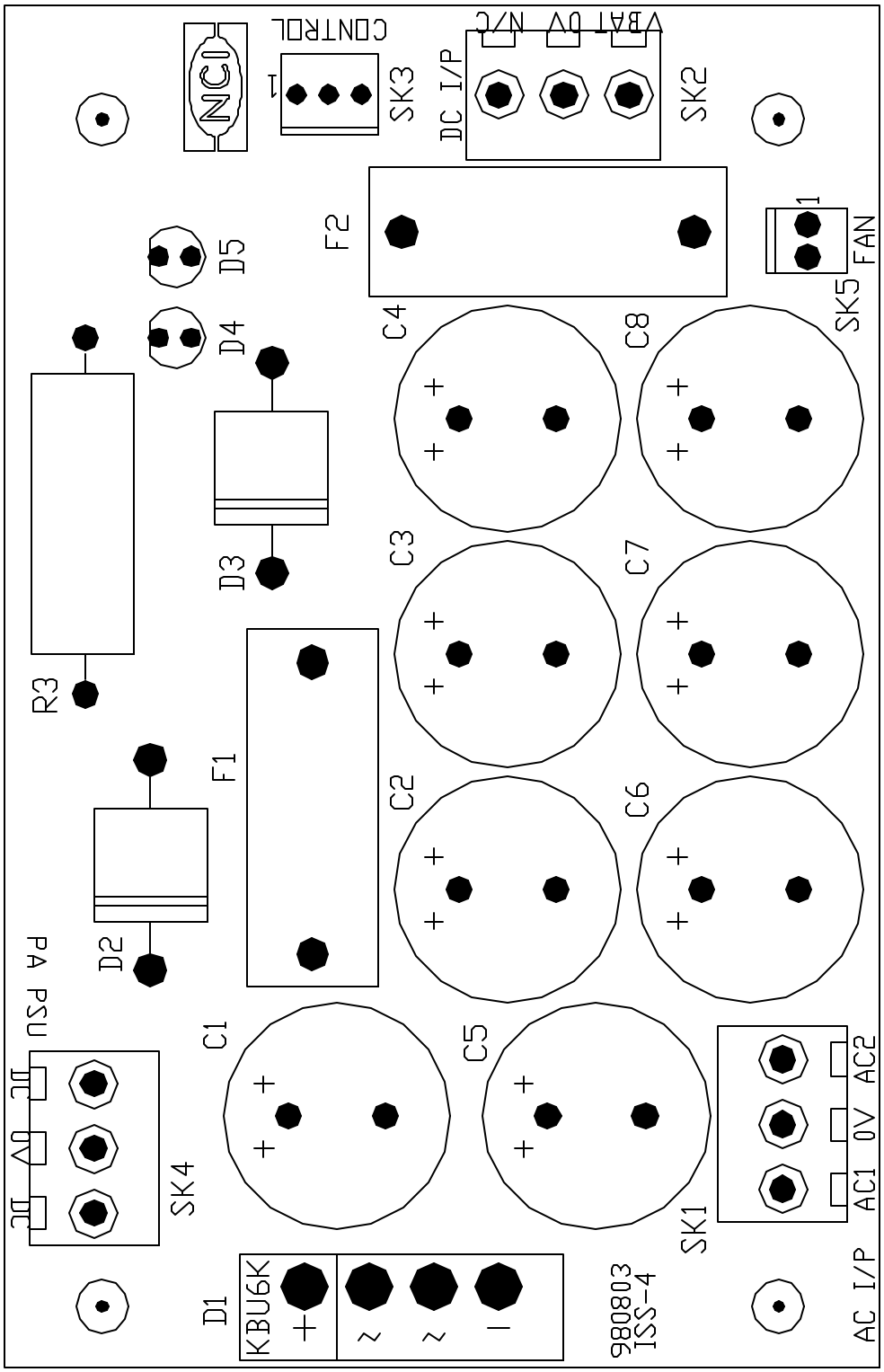

980803A4.DWG ASSEMBLY SHEET 1 OF 2

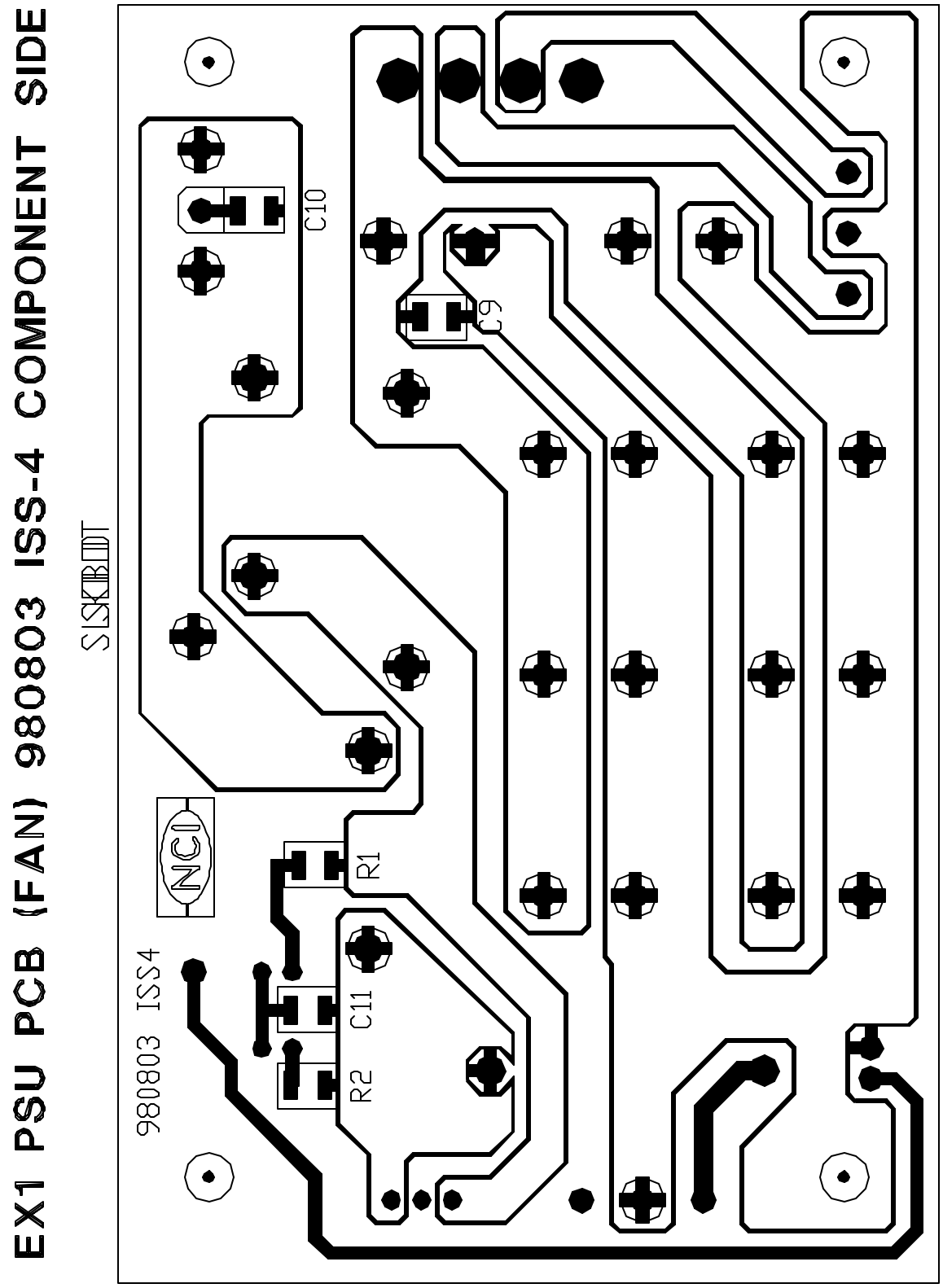

980803A4.DWG ASSEMBLY SHEET 2 OF 2

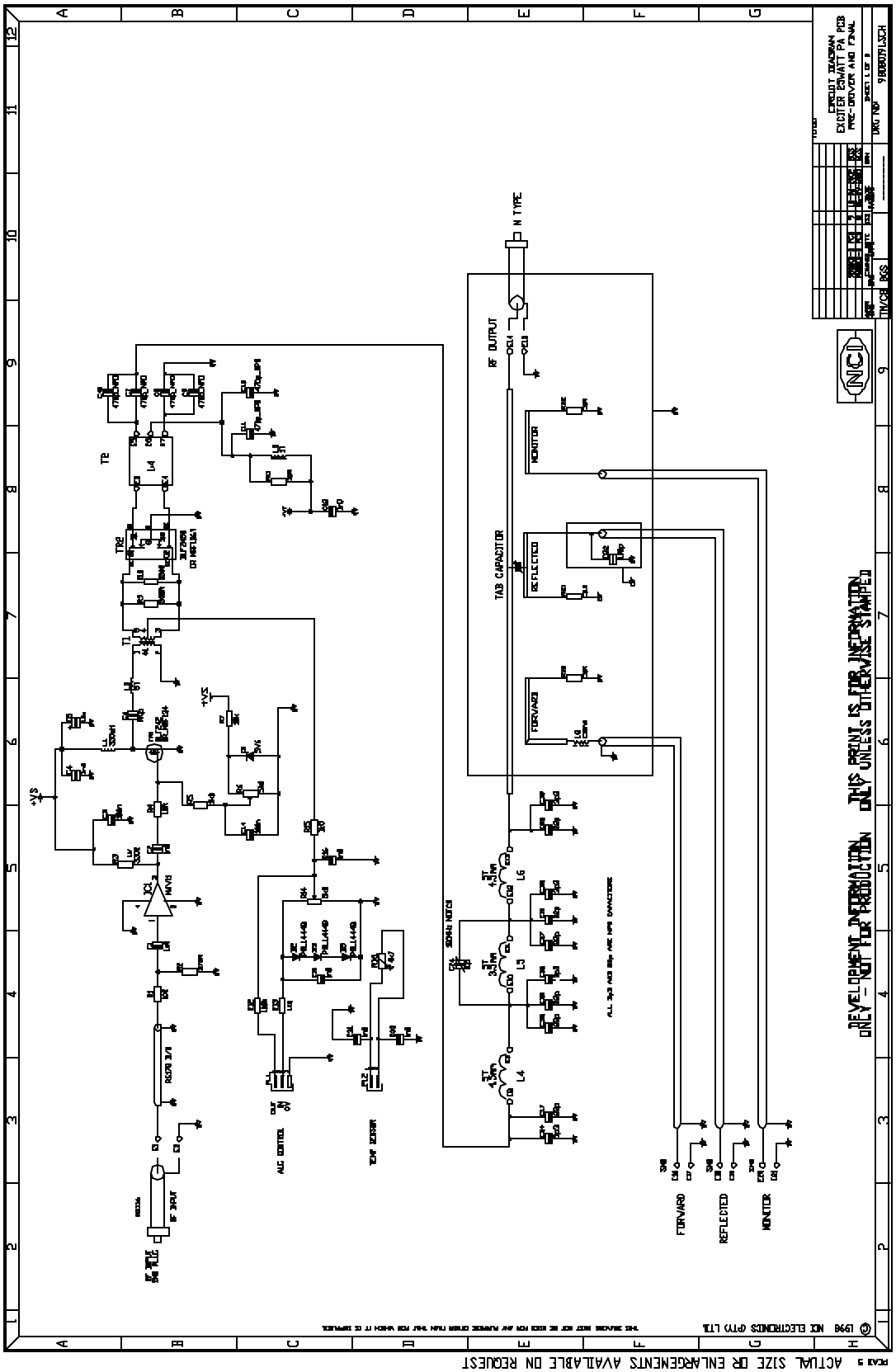
00050100.DWG
ACTUAL SIZE OR ENLARGEMENTS AVAILABLE ON REQUEST
DEVELOPMENT INFORMATION ONLY - NOT FOR PRODUCTION
THIS PRINT IS FOR INFORMATION ONLY UNLESS OTHERWISE STAMPED
EXCITER SCHMATIC PCB
PWR DRIVER AND FINAL
FORWARD
REFLECTED
MONITOR
RF OUTPUT
N TYPE
TAB CAPACITOR
RF INPUT
ALC CONTROL
TEMP SENSOR

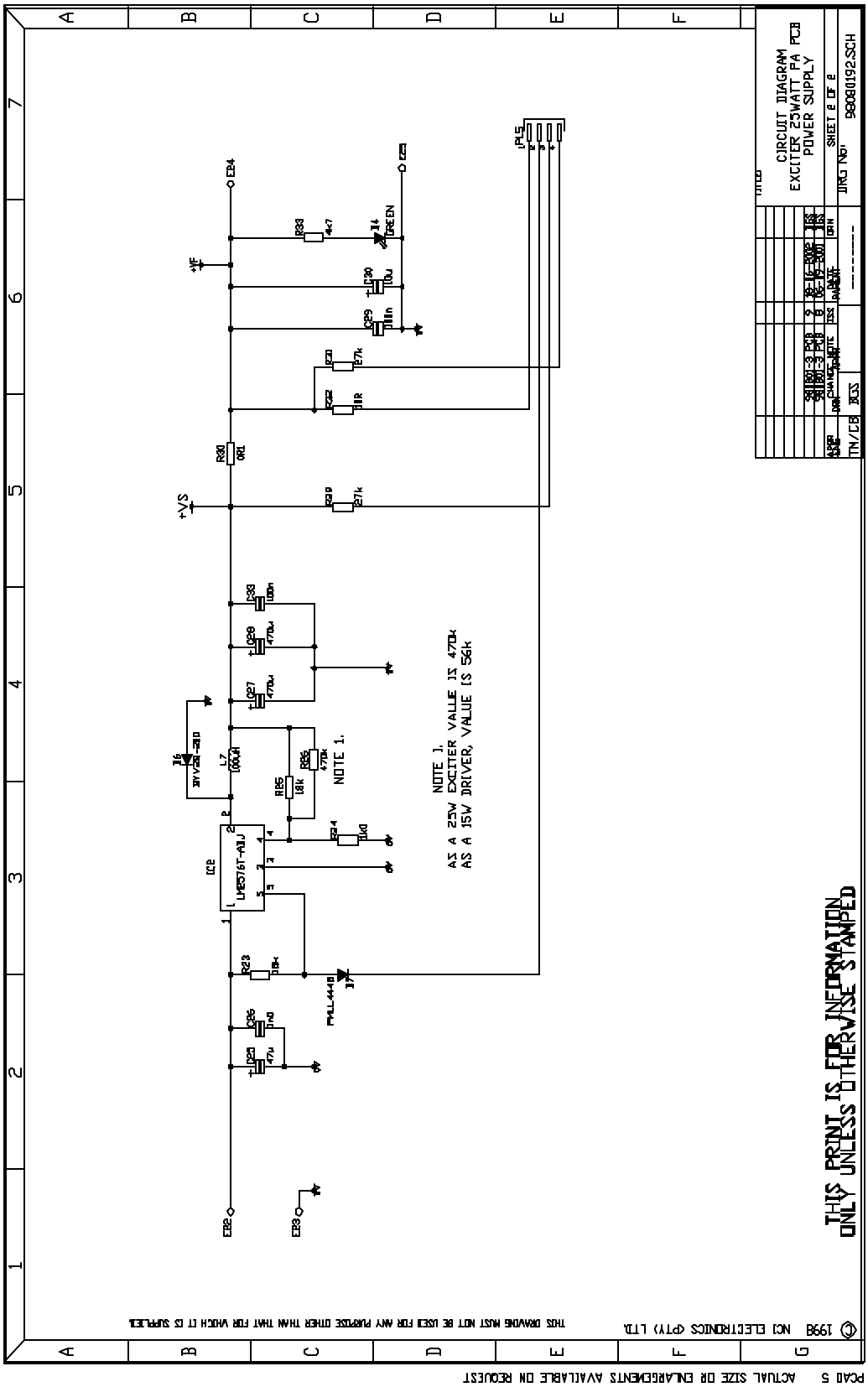

00050100.DWG

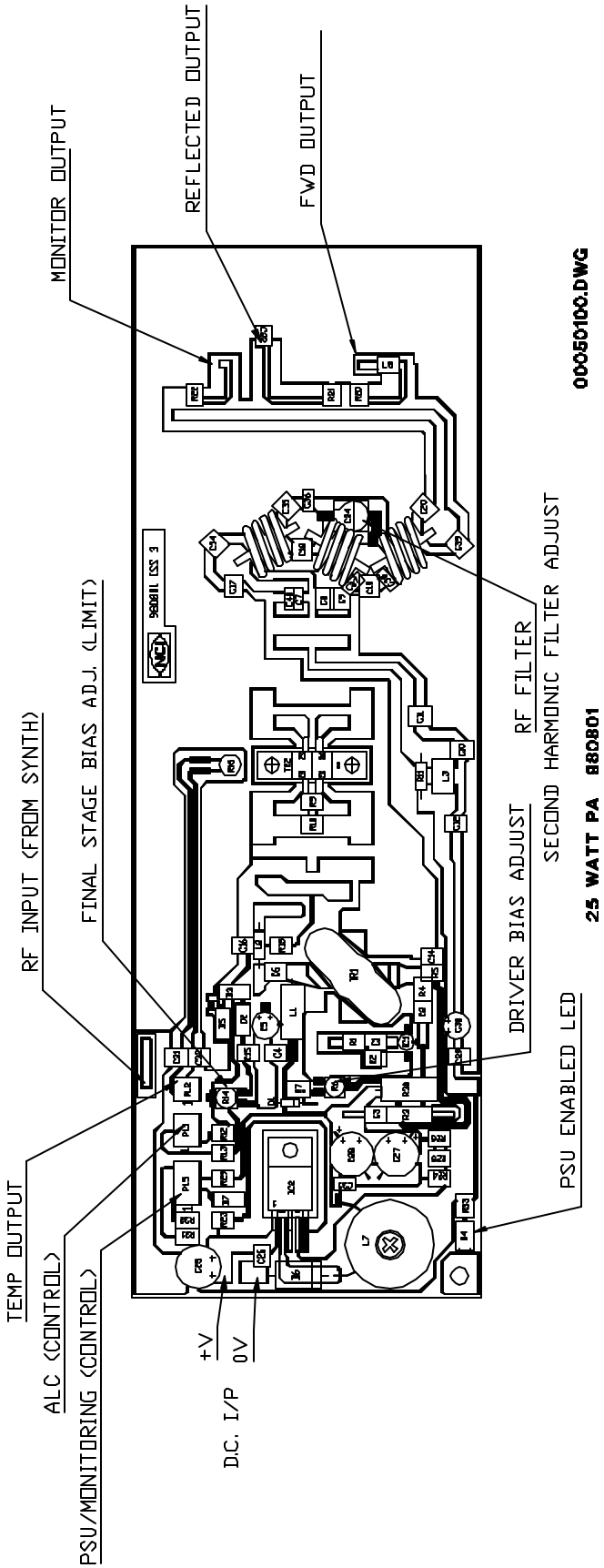
MONITOR OUTPUT
REFLECTED OUTPUT
FWD OUTPUT
RF INPUT (FROM SYNTH)
FINAL STAGE BIAS ADJ. (LIMIT)
RF FILTER
DRIVER BIAS ADJUST
SECOND HARMONIC FILTER ADJUST
PSU ENABLED LED
TEMP OUTPUT
ALC (CONTROL)
PSU/MONITORING (CONTROL)
+V
0V
D.C. I/P
00050100.DWG
25 WATT PA 880801