Phottix

Phottix Juno Li60 Hot Shoe Flash

Model:H0801

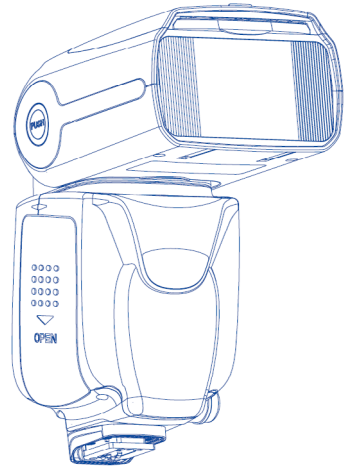

Note: Please read this manual and be familiar with your camera manual and operations.

The Phottix Juno Li60 Hot Shoe Flash is designed to work with ISO hot shoe cameras and features Manual, Multi Modes as well as Wireless (Radio and Optical) triggering.

Warnings

1. Use your flash safely. Do not fire the flash into the eyes of people or animals at short distances – damage and/or blindness can occur.

2. Be careful using the flash in or around cars, buses, motorcycles or other moving vehicles as accidents can result.

3. Never use the flash near combustible gases (gasoline, solvents, etc.).

4. Do not expose the flash or battery to dripping/splashing water, or high humidity.

5. Do not leave the flash or battery in a hot location (direct sunlight, in a closed car, etc.).

6. Remove battery from the flash when not being used for an extended period of time.

7. Use only Juno Li60 Recharger battery H0802

8. Do not put opaque objects in front of the flash lens when firing the flash. The energy emitted by the flash may cause objects to burn, or cause damage to the flash tube or fresnel lens.

9. Use caution in touching the flash head after use. It may be hot and can cause burns.

10. The flash contains high voltage electronic parts. Do not disassemble or attempt to repair the flash. Never touch the flash's internal components.

Table of contents

1. Parts and Function 4
2. Flash Set-up 6
3. LCD Display 9
4. Functions and Operations 10
5. Wireless Triggering Modes 12
6. Other Functions 17
7. Custom Function 18
8. Specifications 19
9. Appendix 20

1. Parts

Back/Left side

1. LCD Display
2. Mode Button
3. Test Button/ Ready Light
4. Locking Lever
5. Wireless Select
6. Group (Gr)
7. Custom Function (C,Fn)
8. Channel (Ch)
9. Zoom (Zm)
10. Power Switch
11. Selection Dial
12. OK Button
13. 1/4" Mounting Screw
14. Micro USB Port (for repair center)
15. Sync Port 3.5mm

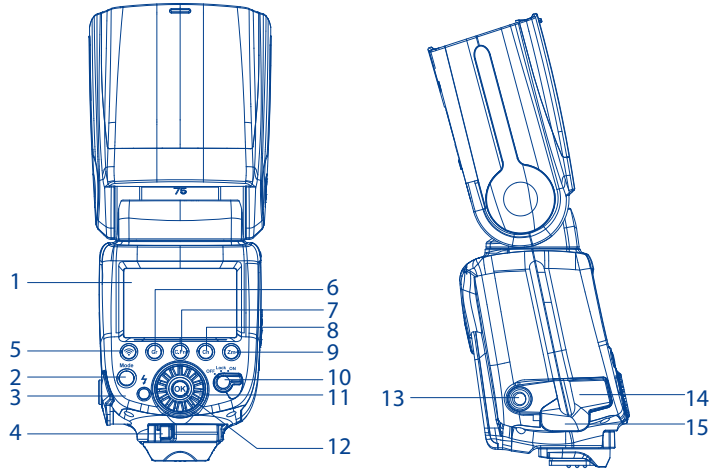

Front/Right side

1. Flash Head Locking Button
2. Battery Compartment
3. Bounce Card
4. Wide Angle Diffuser
5. Flash Head
6. Optical Signal Receiver
7. Hot Shoe

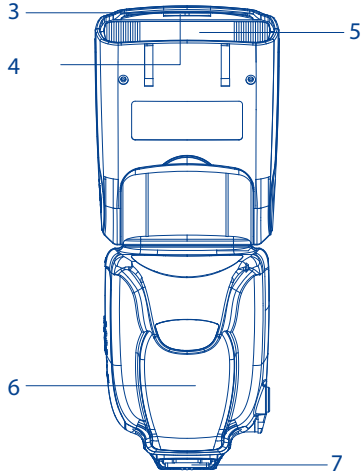

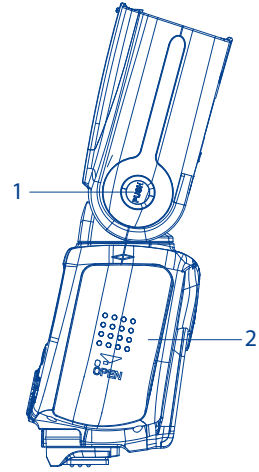

2. Flash Set-up

This manual assumes:

1. Both the flash and camera are switched on.

2. The flash and camera are set to the same settings as this manual.

3. Camera menu and flash custom Functions menu are set to default values.

4. The flash is being used with a compatible camera.

Please note:

- The Juno Li60 Hot Shoe Flash circuitry is designed to be used with only Juno Li60 H0802 rechargeable battery.\

- Only can be used battery charger H0803 for charging Juno Li60 H0802 rechargeable battery

- Battery can get hot when the flash is being used. Use caution when changing battery

- If you do not use the flash for an extended period of time, store with battery removed.

Installing Battery

1. Press the battery cover in while pushing it towards the bottom of the flash. The battery cover will open and raise.

2. Insert Juno Li60 H0802 rechargeable battery as shown by the diagram inside the battery compartment

3. Lower the battery cover and push back towards the top of the flash, locking it in place.

Battery Level Indicator

The Battery Level Indicator on the LCD will display an approximate indication of how much power remains in the battery in the flash. Use this as a rough guide as to when a battery change is needed. If flash recycling time has become very long (30 seconds) change the battery.

Status LED

Flash-ready indicator. In Quick Flash Mode, the LED will turn green when the flash has the minimum recycle charge. It will turn red when fully charged.

Overheating Protection

The Phottix Juno Li60 contains an overheating protection circuit that will slow flash recycle time to avoid overheating-related damage. Approximately 30 full-power flashes in a short amount of time will trigger this protection. Stop using the flash and wait 10 minutes for it to cool down.

Sync and USB Ports

1. The 3.5mm Port can be used with a 3.5mm mono cable to trigger the flash – from a flash trigger or camera. This port is input only – flash signals are not output from this port.

2. The Micro USB port is used for repair center only.

Attaching the Flash to the camera

1. Turn off both the camera and flash

2. Align the flash hot shoe with the camera hot shoe.

3. Slide the flash into the camera hot shoe until fully inserted.

4. Lock the flash in position by pushing the locking lever to the right until the lock engages with a click.

5. To Unlock, press the locking release Button on the locking lever and slide to the left.

Turning the Flash On/ Off

1. To power on the flash move the power switch to the on position.

2. To power off the flash move the power switch to the off position.

3. To Lock the flash: Move the power switch to the“LOCK”positios. This “locks” the Buttons and Dial of the flash, so setting cannot be accidentally changed.

Raising and Rotating the Flash Head

1. The flash head will elevate from -7 to 90 degrees with stops at -7, 0, 45, 60, 75 and 90 degrees.

2. To Adjust: Press the Flash Head Locking Button and gently raise or lower the flash head into the desired position.

3. The flash head will rotate 180 degrees in either direction with stops at 30, 60, 90, 120, 150 and 180 degrees.

4. To Adjust: Press the Flash Head Locking Button and gently rotate the flash head into the desired position.

Using the Bounce Card or Wide Angle Diffuser

The Phottix Juno Li60 Hot Shoe Flash comes equipped with a White Bounce Card and Wide Angle Diffuser Panel in the flash head.

1. The Wide Angle Diffuser Panel will cause the flash to spread light to a 14mm equivalent.

2. The White Bounce Card can be used when the flash head is in a raised position to bounce light forward to assist with catch lights in a subject's eyes.

To use:

1. Gently pull the Diffuser Panel and Bounce Card from the Flash Head using the ridge on the bottom of the Diffuser Panel.

2. If using the Diffuser Panel it will drop into position over the Flash Head. Gently push the Bounce Card back into the Flash Head if not needed.

3. If using the Bounce Card only gently push the Diffuser Panel back into the Flash Head.

Using the Flash Head Diffuser

The Phottix Juno Li60 Hot Shoe Flash comes with an attachable diffuser that can be added to the front of the flash head when needed. It is good for softening light, reducing hot spots and shadows and better coverage for macro photography.

Setting the flash zoom

1. Press the Zoom Button (Zm) to enter the flash zoom adjustment Mode.

2. Use the Selection Dial to set zoom value.

3. When finished, press the OK Button to exit.

Test Button

Pressing the test Button will trigger the flash. This can be used for metering (in manual Mode only). In Wireless Master Mode pressing the test Button will fire slave flashes on the same channel, group and matching ID being controlled by the Master flash.

3. The LCD Display

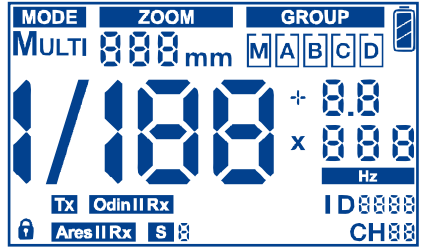

Wireless Function Mode:

1.TX: Odin II Transmitter mode

2.Odin II RX: Odin II Receiver mode

3.Ares II RX: Ares II Receiver mode

4.S1 / S2: Optical Slave mode

4. Functions and Operations

Standard Flash Mode (Wireless OFF)

There are 2 flash Mode available: Manual(M) and Stroboscopic(Multi).

Changing Flash Mode:

Pressing the "MODE" Button will cycle between Manual(M) and Stroboscopic(Multi). The selected Flash Mode will display on the upper left corner of the LCD.

M: Manual Mode

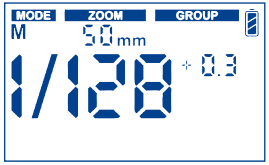

In Manual Mode the flash will fire at the power level set on the flash. The Phottix Juno Li60 Hot Shoe Flash can be adjusted from 1/1 (full power) to 1/128 – 8 stops of adjustments in 1/3rd stop increments. Aperture, shutter speed and ISO on the camera need to be manual adjusted. For best results use camera M-Manual Mode.

To use:

1. Press "MODE" Button until the flash displays M on the top left corner of the LCD.
2. Press "OK" Button to enter Manual Power Adjustment Mode.
3. Use the "Selection Dial" to adjust the Power Level.
4. Press "OK" Button to exit.

Multi: Stroboscopic Mode

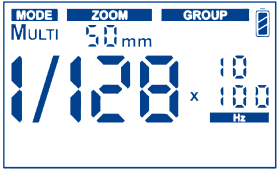

With Multi Stroboscopic Mode a series of rapid flashes will be fired. The flash count, frequency and power of these flashes can be programmed on the Phottix Juno Li60. Multi Mode is useful for capturing multiple images of a moving subject in the same photo and other special effects. The frequency of the effect (in Hz. - number of flashes per second), the total number of flashes and output levels can be set.

To Use:

1. Press "MODE" Button until the flash displays Multi on the top left corner of the LCD.

2. Press "OK" Button to enter Power Adjustment Mode, use the Selection Dial to adjust the flash power

4. Press "OK" Button to cycle through Number of Flashes (X) and frequency (Hz), and use the Selection Dial to adjust these settings.

Please note:

1. Overheating and damage can result from excessive use of the Multi Stroboscopic Mode. Do not use more than 20 times in succession.

2. When overheated the flash will automatically increase recycling time until the flash temperature has decreased.

Stroboscopic Mode and Shutter Speeds

To determine the proper camera shutter speed to be used with various Stroboscopic Mode variables, use the following formula: Number of flashes / Frequency = Shutter Speed

Example: 5x (number of flashes) / 10 Hz (Frequency) = .5 second

shutter speed. This is a rough guideline: You may need to increase or decrease the shutter speed to get the desired result.

Multi Stroboscopic Mode Output Chart

HZ / Flash Output	1	2	3	4	5	6-7	8-9	10	11	12-14	15-19	20-50	60-199
1/4	7	6	5	4	4	3	3	2	2	2	2	2	2
1/8	14	14	12	10	8	6	5	4	4	4	4	4	4
1/16	30	30	30	20	20	20	10	8	8	8	8	8	8
1/32	60	60	60	50	50	40	30	20	20	20	18	16	12
1/64	90	90	90	80	80	70	60	50	40	40	35	30	20
1/128	100	100	100	100	100	90	80	70	70	60	50	40	40

If the number of flashes is displayed as “N---”, the maximum number of flashes will be as shown by the table below regardless of the firing frequency.

Flash output	1/4	1/8	1/16	1/32	1/64	1/128
Flash count	2	4	8	12	20	40

5. Wireless Triggering Modes

The Phottix Juno Li60 Hot Shoe Flash is equipped with several wireless transmitter and receiver Modes. It offers built-in compatibility with the Phottix Odin II, Phottix Odin Lite and Phottix Ares II Trigger system.

Selecting Wireless Triggering Mode

To set the wireless triggering Modes on the Juno Li60

1. Press the “Wireless” Button to enter the Wireless Triggering Mode Selection area

2. Pree "wireless" Button again to select the desired Wireless Triggering Mode and press the OK Button to select.

3. Set the parameters for the selected Wireless Triggering Mode (e,g: Channels and groups).

Wireless Triggering Mode available on Juno Li60:

Tx (Odin II Transmitter)

Allows full adjustments to local and remote Manual flash power and zoom on other Juno Li60, Juno TTL, Indra360, Indra500, Mitros+ flashes (in Odin II Rx Mode). Flashes or studio lights with Strato II or Ares II receivers can be triggered in manual Mode by the Juno Li60 flash in Odin II Tx Mode.

Note: Odin Z OS require on Indra360, Indra500, Mitros+

Odin II Rx(Receiver)

The Juno Li60 Hot Shoe Flash in Odin II Rx Wireless Mode can be triggered by another Juno Li60, Juno TTL, Mitors+ flash in Odin II Tx Mode or by a Phottix Odin II, Odin Lite Transmitter. If using an Odin II Transmitter (for any brand version) the Juno Li60 in Odin II Rx Wireless Mode will support to Canon, Nikon, Sony and Pentax compatibility. It support HSS with Odin II trigger.

Note: Odin II Transmitter or Mitros+ Flash Canon, Nikon and Sony requires Odin Z OS

Ares II Rx(Receiver)

The Juno Li60 in Ares II Rx Wireless Mode can be triggered by Phottix Ares II Transmitters, Phottix Odin II Transmitters, Phottix Odin Lite Transmitters, Phottix Juno TTL Hot Shoe Flash and Phottix Juno Li60 Hot Shoe Flash in Odin II Tx Mode.

S1 / S2 Rx (Slave)— Optical Slave

In S1/S2 Rx Mode other nearby flashes will trigger the Juno Li60 in manual Mode only when they are fired.

Please note: The Juno Li60 cannot be triggered by Phottix Strato, Odin I TCU or Ares .

In the wireless triggering Mode Selection screen, if the OK Button is not pressed, after 12 seconds the flash will enter the current selected Wireless Mode.

Tx (OdinII Transmitter Mode)

Using the Juno Li60 Hot Shoe Flash in Odin II Tx Mode allows for a flash to be used on-camera in Manual Mode as well as control four groups (A, B, C, D) – adjusting manual power levels as well as flash head zoom on Juno Li60, Juno TTL Hot Shoe Flashes set in Odin II Rx Mode.

OdinII Tx Mode interface

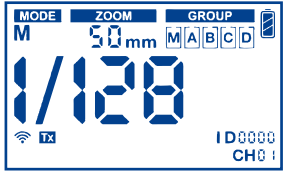

Using OdinII Tx Mode

After selecting OdinII Tx Mode (above)

1. Press "Gr" Button to cycle through M (Master flash), A,B,C,D.
2. Pressing the Mode Button while a Group is selected will change On or Off.
3. Use the Selection Dial when a group is selected to adjust the power level (1/128 to 1/1 in 1/3 stops).
4. Press the OK Button to confirm and exit the Odin II Tx Mode editing menu.

Flash Zoom adjustment in Odin II TX Mode

1. Press "Gr" Button to cycle through M(Master), A, B, C, D groups.
2. Press "Zm" Button to access the zoom adjustment screen.
3. Use the Selection Dial to change the zoom of the selected group, the master flash can be set zoom 20mm, 24 mm, 28 mm, 35 mm, 50 mm, 70 mm, 80 mm, 105mm, 135mm and 200mm
4. Press OK Button to confirm and exit the zoom adjustment screen.

Setting channels

1. Press “Ch” Button to enter the Channels Selection area
2. Use the Selection Dial to cycle through CH 1-32 (Channels 1-32)
3. Press the OK Button to confirm and exit the channel Selection

Setting Digital ID

1. Press “Ch” Button unit to enter the Digital ID Selection area.
2. Press the “Ch” Button to choose the digit in the ID, use the select Dial to change the digit.
3. Press “OK” Button to confirm and exit the ID Selection area.

Odin II Rx(receiver) Mode

When the Odin II Rx Wireless Mode is selected the Phottix Juno Li60 Flash can be controlled and triggered from another Juno Li60, Juno TTL, Mitros+ Flash in Odin Tx Mode, Odin II Transmitter or an Odin Lite Transmitter.

Odin II Rx Mode screen

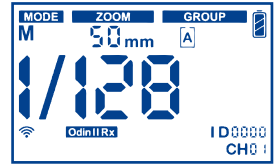

Changing channels, groups and ID

1. Press “Ch” Button to enter the Channels adjustment area. Use the Selection Dial to change the channels between CH1-CH32. Press the OK Button to confirm and exit channel adjustment area.
2. Press “Gr” Button to enter groups adjustment area. Use the Selection Dial to change the groups between A,B,C,D
3. Press “Ch” Button to enter ID adjustment area. Press the “Ch” Button to choose the digit in the ID and use the Selection Dial to

change the digit, press Button to exit the ID interface

Please note:

- In OdinII Rx (Receiver) Mode there are supported wireless HSS with Odin II Transmitter or Juno TTL. There are supported for all Phottix Canon, Nikon, Sony, Pentax versions.

Ares II Rx (receiver) Mode screen

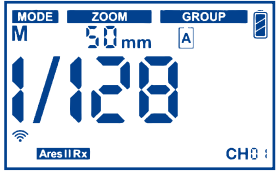

When the Ares II Rx Mode is selected, the Juno Li60 will be triggered by Phottix Ares II Transmitters, Phottix Odin II Transmitters or a Phottix Juno Li60, Juno TTL Flash in Odin II Tx Mode – when set to the same channel, group and Digital ID.

Changing channels, groups, ID, and flash Mode

1. Press “C.h” Button to enter the Channels adjustment area. Use the Selection Dial to change the channels between CH1-CH16. Press the OK Button to confirm and exit channel adjustment area.

2. Press “C.Fn” Button unit to enter ID adjustment screen. Press the “C.Fn” Button to choose the digit in the ID and use the select Selection Dial to change the digit, press OK Button to exit the Digital ID screen.

3. Press “Gr” Button to enter groups adjustment area. Press "Gr" Button again to change the Groups between A,B,C,D. Press the OK Button to confirm and exit group adjustment area.

4. Press OK Button to enter power adjustment area. Use the Selection Dial to change the power of the flash between 1/1 to 1/128 with 1/3 stops increments. Press the Function Button correspond to to confirm and exit the Selection screen

5. Use the Mode Button to change flash Mode between Manual (M) and Stroboscopic (Multi.)

Please note:

- In Ares II Rx (Receiver) Mode there are no wireless TTL Functions such as HSS or SCS, or wireless power/zoom control.

- Power and zoom levels must be set manually on the Juno Li60 flash while in Ares II Rx Mode.

- Digital ID is only available in CH5-16, CH1-4 cannot set.

S1 / S2 Rx optical slave Mode

S1 / S2 Rx Optical Slave Mode allows the Juno Li60 to be triggered in manual mode by other flashes.

Adjusting power and zoom

1. Adjusting Power: Press OK Button to enter power adjustment area. Use the Selection Dial to change the power. Press the OK Button to confirm and exit.

2. Adjusting Zoom: Press "Zm" Button to enter zoom adjustment area. Use the Selection Dial to change the zoom. Press the OK Button to confirm and exit

6. Other Functions

Auto Save Function

The Juno Li60 Hot Shoe Flash will remember flash settings. Such as mode, power levels. These will be retained in the flash if it is turned off and then back on.

Auto Sleep Function

To save battery power the Phottix Juno Li60 Flash is equipped with Sleep and Auto Off Modes.

1. In Non-Wireless Slave Modes: The flash will go into Auto Sleep Mode after 10 min. if no Buttons have been pressed or it has not been fired. The flash LCD will go blank. Pressing the test Button on the flash will wake up the Phottix Juno Li60.

2. In Wireless Slave Mode, the flash will go to Slave Sleep Mode after 10 minutes if no Buttons have been pressed or it has not been fired. Full-pressing the camera shutter Button or pressing

the Master flash test Button will wake up flashes in idle Mode. Slave SleepTimer can be set (see C.Fn)

7. Custom Functions (C.Fn)

The Juno Li60 Hot Shoe Flash comes with a number of programmable custom Functions. To edit these Functions (below):

1. Press C.Fn Button to enter custom menu Selection screen.

2. Press C.Fn Button to select the custom Function you would like to adjust.

3. Use the Selection Dial to change the setting. Press OK Button to confirm and return to Menu Selection screen.

4. Once Custom Functions have been edited, press Selection Button correspond to to leave the Custom Functions Menu.

LCD Display	Function	Setting Options	Setting description
SL	Sleep	OFF	Off: Flash will not got to sleep Mode
		10min	Flash will enter sleep Mode in 10 min (default)
		30min	Flash will sleep Mode in 30 min
		60min	Flash will sleep Mode in 60 min
Bp	Beep	OFF	Tum off beep sound
		ON	Tum on beep sound(default)
ID	ID Code	OFF	Off: ID code is not used in Odin II and Ares II radio receiver Mode (default)
		ON	On: ID code is used in Odin II and Ares II radio receiver Mode

Auto backlight

Default setting, if no Button is pressed, the backlight of the LCD will automatically turn off after 12 seconds. To turn the backlight on, press any Button of the flash.

Changes to the Flash Capacitor:

If the flash is not used regularly physical changes will take place within the flash's capacitor. Make sure to turn on the flash a minimum of 10 minutes every three months to prevent any physical changes.

8. Specifications

Flash Mode	M(Manual) and Multi(Stroboscopic)
Guide number	60(200mm zoom, ISO 100/m)
Flash coverage	20-200mm
zoom	zoom can be adjusted independently to the lens focal length
Flash head angle	Rotation: 360 degree(180 degree left and right); Up, Down: -7 to 90 degree
Sync Mode	First Curtain Sync and High Speed Sync (Odin II RX Mode only)
Stroboscopic flash	Frequency: 1-99Hz Number of flashes: 1-100
Recycling time	Normal flash Approx.0.1-2 sec./Red LED indicator lamp lights up
Internal Power	Li-ion battery model number H0802 7.4V 3200mAh
Battery life	Up to Full power 1/1 with 600 cycles
Power saving	Selectable between OFF, 10min, 30min, 60min
Wireless flash signal transmission method	Channels: Radio(CH1-32)
	Wireless Mode: OdinII TX, OdinII RX, AresII RX, S1/S2 RX
	Transmisson rage (Approx): Radio:100m
	Reception angle: Radion: 360° all directions, Optical transmission: ±40° (horizontal), ±30°(vertical)
	Controllable Slave/receiver group: Radio(Gr A/B/C/D)
Dimension(LxWxH)	193x79x60mm
Weight	Approx 410g (exclude battery)

9. Apprendix: Juno Li60 compatibility and supported feature with Other Phottix products

	Juno Li60 TX		Juno Li60 RX
Indra360/500 Odin Z OS	i. NO TTL ii. NO HSS iii. NO Auto Metering iv. power control Display power level on flash	Odin II TX OdinZ OS	i. NO TTL ii. HSS iii. NO Auto Metering iv. power control Support cross brand system Display power level
Juno TTL @ RX	i. NO TTL ii. NO HSS iii. NO Auto Metering iv. power control Display power level on flash	Juno TTL @ TX	i. NO TTL ii. HSS iii. NO Auto Metering iv. power control Support cross brand system Display power level

	Juno Li60 TX		Juno Li60 RX
Juno Li60 @ RX OdinZ OS	i. NO TTL ii. NO HSS iii. NO Auto Metering iv. power control Support cross brand system Display power level	Juno Li60 @ TX	i. NO TTL ii. NO HSS iii. NO Auto Metering iv. power control Support cross brand system Display power level
Odin II Receiver Odin Z OS	Not Support	Odin Lite TX	i. NO TTL ii. NO HSS iii. NO Auto Metering iv. power control Support cross brand system Display power level

EC Declaration of Conformity

We Phottix (HK) Ltd.

Of 10/F Block A, Yip Fat Factory Building, Phase 1, 77 Hoi Yuen Rd, Kwun Tong, Kln, Hongkong

declare herewith that the product designated below:

Product name: Phottix Juno Li60 Hot Shoe Flash

Model No.: H0801

complies with the relevant fundamental requirements as per R&TTE Directive 1999/5/EC, insofar as the product is used correctly, and the following standards or other normative documents

ETSI EN 300 440-1 V1.6.1 (2010-08)

ETSI EN 300 440-2 V1.4.1 (2010-08)

ETSI EN301 489-1 V1.9.2/2011-09

ETSI EN301 489-17 V2.2.1/2012-09

EN 62479: 2010

FCC Compliance Information

Company: **Phottix (HK) Ltd.**

Name: **Phottix Juno Li60 Hot Shoe Flash**

Model Number: H0801

FCC ID: P9M-JUNOLI60

FCC Statement

This equipment has been tested and found to comply with the limits for a Class B digital device, pursuant to part 15 of the FCC Rules. These limits are designed to provide reasonable protection against harmful interference in a residential installation. This equipment generates, uses and can radiate radio frequency energy and, if not installed and used in accordance with the instructions, may cause harmful interference to radio communications. However, there is no guarantee that interference will not occur in a particular installation. If this equipment does cause harmful interference to radio or television reception, which can be determined by

turning the equipment off and on, the user is encouraged to try to correct the interference by one or more of the following measures:

• Reorient or relocate the receiving antenna.

• Increase the separation between the equipment and receiver.

• Connect the equipment into an outlet on a circuit different from that to which the receiver is connected.

• Consult the dealer or an experienced radio/TV technician for help.

Caution: Any changes or modifications to this device not explicitly approved by manufacturer could void your authority to operate this equipment.

This device complies with part 15 of the FCC Rules. Operation is subject to the following two conditions: (1) This device may not cause harmful interference, and (2) this device must accept any interference received, including interference that may cause undesired operation.

RF Exposure Information

The device has been evaluated to meet general RF exposure requirement. The device can be used in portable exposure condition without restriction.

CAUTION

RISK OF EXPLOSION IF BATTERY IS REPLACED BY AN INCORRECT TYPE. DISPOSE OF USED BATTERY ACCORDING TO THE INSTRUCTIONS

What's included:

1. Juno Li60 unit X 1
2. Li-ion Battery H0802 (7.4V 3200mAh)
3. Battery charger H0803
4. AC/DC adaptor for battery charger MKS-120-1500 (with US / EU / UK plug)
5. Carrying bag.
6. Diffuser cap (white color)
7. Hot shoe stand.
8. Printed user manual.

Phottix Juno Li60 閃光燈是專為搭配數碼單反相機使用而設計的，具有手動模式、頻閃模式及無線主控 / 引閃功能。

提示：使用該閃光燈之前，請閱讀此閃光燈說明書及熟悉您的相機使用手冊與相關操作。

警告

1. 請安全使用您的閃光燈。切勿在短距離內直接對著人或動物的眼睛觸發閃光燈，否則會損傷眼睛，甚至導致失明。

2. 在汽車、公車、摩托車或其他移動的交通工具上或周圍，請謹慎使用閃光燈，因為可能會導致交通事故。

3. 請勿在可燃氣體（如汽油、溶劑等）附近使用閃光燈，有爆炸的危險！

4. 請勿讓閃光燈或電池接觸到滴水、濺水或高濕度物體。

5. 請勿將閃光燈或電池置於高溫環境下（如直射陽光、封閉的汽車等）。

6. 若一定時間內不使用閃光燈，請將電池取出。

7. 請按照需要更換電池。只能使用 Juno Li60 專用充電池 H0802。

8. 閃光燈閃光時，請勿在閃光燈鏡片的前方放置不透光的物體，否則閃光燈發出的熱量將可能燒灼放置的物體或是損壞閃光燈管或菲涅爾鏡片！

9. 閃光燈頭在使用後可能會很燙，請勿觸摸，有灼傷的危險！

10. 閃光燈內部有高壓電子部件，請勿私自拆開或試圖修理閃光燈。切勿觸摸閃光燈的內部元件，有觸電的危險！

11. 請勿用金屬物體接觸閃光燈的外置電源埠，有可能觸電或造成重傷！

目錄

一、部件名稱 26
二、使用前準備 28
三、液晶顯示幕內容 31
四、功能和操作 31
五、無線引閃 35
六、其他功能 39
七、自訂功能 40
八、規格參數 41
九、附錄 42

一、部件名稱

後面 / 左側

1. 液晶顯示幕
2. 模式按鈕 (Mode)
3. 測試閃光按鈕 / 閃光就緒指示燈
4. 鎖定杆
5. 無線按鈕
6. 組別按鈕 (Gr)
7. 用戶設定按鈕 (C.Fn)
8. 頻道按鈕 (Ch)
9. Zoom 按鈕 (Zm)
10. 電源開關
11. 選擇撥盤
12. OK 按鈕
13. 1/4" 標準螺母
14. Micro USB 埠（維修中心使用）
15. 3.5mm 同步埠

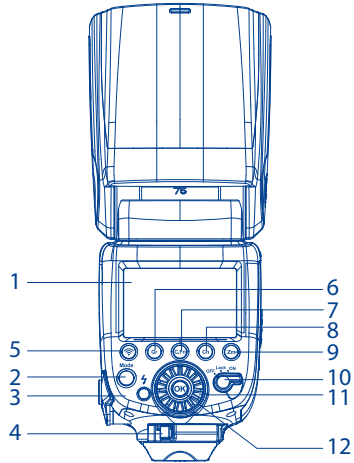

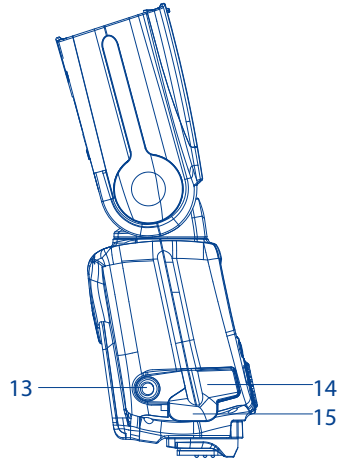

前面 / 右側

1. 燈頭旋轉按鈕
2. 電池倉
3. 反射板
4. 廣角散光板
5. 閃光燈頭
6. 光感接收區域
7. 熱靴

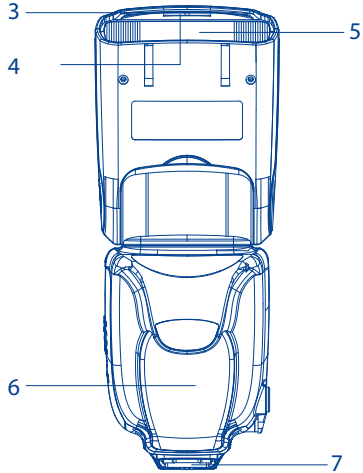

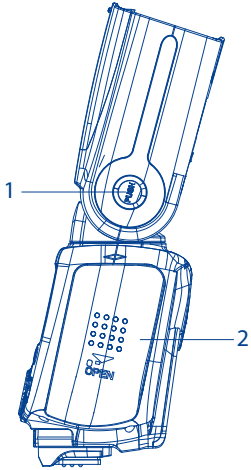

二、使用前準備

此說明書中假定以下內容：

1. 閃光燈和相機的電源開關都設為開啟。
2. 閃光燈和相機的設置與本說明書中所述的設置一致。
3. 相機功能表和閃光燈自訂功能都設置為預設值。
4. 閃光燈是搭配一款相容的單反數碼相機使用。

安裝電池

1. 按住電池倉蓋並向閃光燈底部方向滑動，電池倉蓋將會彈起打開。
2. 按照電池倉中的指示安裝 Juno Li60 專用充電池 H0802。
3. 按住電池倉蓋並向閃光燈頂部方向推動 ，電池倉蓋將會鎖定到位。

請注意：

- Juno Li60 只能使用專用充電池 H0802。
- 閃光燈在使用時，電池可能會很燙，更換電池時需小心！
- 如果長時間不使用閃光燈，請取出電池。

將閃光燈安裝到相機上

1. 關閉相機和閃光燈
2. 將閃光燈熱靴與相機熱靴對準。
3. 滑動閃光燈使其完全插入相機熱靴。
4. 滑動鎖定杆到右側直至發出哢噠聲將閃光燈鎖定到位。
5. 鎖定釋放：按住鎖定杆上的鎖定釋放按鈕的同時將鎖定杆滑動到左側。

開啟 / 關閉 / 鎖定閃光燈

1. 開啟閃光燈：將電源開關撥到“ON”的位置。

2. 關閉閃光燈：將電源開關撥到“OFF”的位置。

3. 鎖定閃光燈：將電源開關撥到“LOCK”的位置。 可以防止按鈕和撥盤誤操作。

電池電量顯示

液晶顯示幕上的電池電量顯示器（見下文）將會顯示閃光燈裡電池大概的剩餘電量，可以此作為一個粗略的參考來更換電池。如果閃光燈回電時間很長（30 秒），請更換電池。39

傾斜和旋轉閃光燈頭

1. 閃光燈頭的傾斜角度可以在 -7 度至 90 度之間調節（可傾斜檔位：-7 度、45 度、60 度、75 度、90 度）。輕輕傾斜閃光燈頭到您拍攝所需要的角度。

2. 閃光燈頭可左右各旋轉 180 度(可旋轉檔位 : 30 度、60 度、90 度、120 度、150 度、180 度）。輕輕旋轉閃光燈頭到您拍攝所需要的角度。

使用反射板或廣角散光板

Phottix Juno Li60 閃光燈的燈頭內置有一個白色反射板和一個廣角散光板。

1. 使用廣角散光板，閃光覆蓋範圍可以擴展為 14mm 廣角鏡頭。

2. 當閃光燈頭仰起反射閃光時，白色反射板可用來在被攝體的眼睛裡造出眼神光。

使用步驟：

1. 利用散光板底部邊緣將散光板和反射板從閃光燈頭內輕輕

拉出。

2. 散光板拉出後會置於閃光燈頭上。如果不需要使用反射板，請將它輕輕推回至閃光燈頭內。

3. 如果只使用反射板，請將散光板輕輕推回至閃光燈頭內。

使用閃光燈頭柔光罩

Phottix Juno Li60 閃光燈隨附一個柔光罩，在需要的情況下，此柔光罩可以安裝在閃光燈頭前面，用作柔化光線、減少陰影及增加微距攝影的覆蓋範圍等用途。

過熱保護

閃光燈具有的過熱保護電路功能，將會通過延長閃光回電時間來避免過熱及造成部件損壞。在短時間內，以全功率閃光約 30 次後，將會啟動該過熱保護功能。過熱保護功能生效時，為避免過熱及可能的損壞，閃光燈會自動延長回電時間來降低閃光燈溫度。請等待 10 分鐘冷卻後再使用。

3.5mm 同步埠和 Micro USB 埠

1. 3.5mm 同步埠可通過同步線連接至引閃器或相機來觸發閃光燈。此埠只能輸入閃光信號不能輸出。

2. Micro USB 埠只供維修中心使用。

閃光就緒指示燈

閃光就緒指示燈在快速閃光模式下，達到最小閃光電壓時亮綠燈。充滿電後， LED 指示燈亮紅燈。

三、液晶顯示幕內容

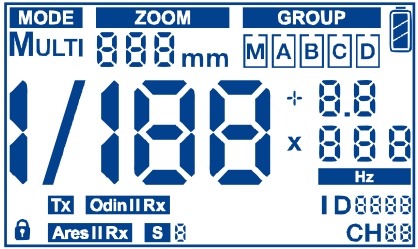

手動閃光

手動閃光輸出 M：手動閃光

頻閃閃光

閃光頻率閃光次數閃光輸出 Multi：頻閃

無線引閃選擇

無線電傳輸 TX：OdinII 發射模式

無線電傳輸 OdinII RX：OdinII 接收模式

無線電傳輸 AresII RX：Ares II 接收模式

光感傳輸：S1 / S2 光感接收模式

四、功能和操作

閃光燈模式

閃光燈具有兩種閃光模式：手動（M）和頻閃（Multi）。

改變閃光模式：

按“ MODE”按鈕，閃光模式將會在手動(M)和頻閃(Multi)模式之間循環切換。當前模式將會顯示在液晶顯示幕的左上方。

M：手動模式

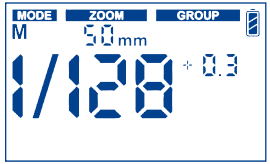

在手動模式下， 閃光燈將會以您設置的功率水準閃光。閃光燈可以在 1/1 至 1/128 功率（共 8 檔）之間以 1/3 檔為增量進行功率調節。相機的光圈和快門速度需要手動調節。為達到最佳效果，請將相機調為 M（手動模式）。

使用手動模式：

1. 按“MODE”按鈕直至閃光燈的液晶顯示幕上顯示 M 圖示。
2. 按 OK 按鈕進入功率調節狀態。
3. 轉動“選擇撥盤”調整閃光功率。
4. 按 OK 鈕確認和退出。

Multi: 頻閃模式

使用 Multi 頻閃模式，可以發出一系列快速的閃光。您可以在閃光燈上設置功率、頻率和閃光次數。頻閃模式有利於在同一張照片上拍攝移動的被攝體的多個圖像以達到特殊效果。

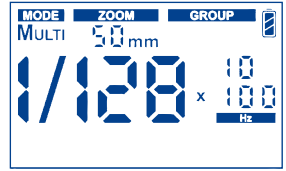

使用頻閃模式：

1. 按“MODE”按鈕直至閃光燈的液晶顯示幕上顯示 Multi 圖示。

2. 按 OK 按鈕 進入功率調節狀態，轉動“選擇撥盤”可以調整閃光功率。

3. 按 OK 鈕直至閃光次數 X 頻率（HZ）設置之間切換。轉動“選擇撥盤”可以調節閃光次數和頻率。

請注意：

1. 過多使用頻閃可能會導致過熱甚至損壞閃光燈，請勿連續使用頻閃超過 20 次。

2. 如果過熱，閃光燈將會自動增加回電時間，直至閃光燈溫度降低到正常才可再次使用。

頻閃模式和快門速度

使用以下公式來確保正確的相機快門速度和不同的頻閃模式參數搭配使用：

閃光次數 / 閃光頻率 = 快門速度

例如，5 次（閃光次數）/10 赫茲（頻率）=0.5 秒（快門速度）

這是一個粗略的參考，實際使用時有可能要調校快門速度來得到預期的結果。

最大頻閃閃光次數

Flash Output \ HZ	1	2	3	4	5	6-7	8-9	10	11	12-14	15-19	20-50	60-199
1/4	7	6	5	4	4	3	3	2	2	2	2	2	2
1/8	14	14	12	10	8	6	5	4	4	4	4	4	4
1/16	30	30	30	20	20	20	10	8	8	8	8	8	8
1/32	60	60	60	50	50	40	30	20	20	20	18	16	12
1/64	90	90	90	80	80	70	60	50	40	40	35	30	20
1/128	100	100	100	100	100	90	80	70	70	60	50	40	40

如果閃光次數顯示為“--×”，不論閃光頻率是多少，最大閃光次數如下表所示。

Flash output	1/4	1/8	1/16	1/32	1/64	1/128
Flash count	2	4	8	12	20	40

五、無線引閃

閃光燈具有幾種無線發射和接收模式。內置相容 Phottix OdinII TTL 觸發器、Phottix odin Lite 觸發器、Phottix AresII 觸發器的功能。更多關於觸發器的功能資訊，請參考產品說明書。

選擇無線引閃模式

如何進入並設置閃光燈上的無線引閃模式

1. 按無線功能按鈕進入模式選擇。
2. 繼續按無線功能按鈕可以選擇無線模式，按“OK” 按鈕。
3. 根據需要設置該無線模式的參數（如：組、頻道）。

無線功能如下：

OdinII Tx（發射器）

可對本機主控閃光燈進行全方位調節，還可以對其他處於 OdinII Rx 模式下的 Juno Li60, Juno TTL, Indra360, Indra500, Mitros+(OdinZ OS) 從屬閃光燈或者安置在 OdinII 接收器上的相容閃光燈，遠端調節 M 模式下的閃光功率和 zoom 值。

連接在 AresII、Strato II 接收器上且設置為 M 手動模式的閃光燈或影樓燈， 可以被處於 odinII TX 模式下的 Juno Li60 閃光燈觸發。

註 : Indra 360, Indra 500, Mitros+ 需要使用 Odin Z 系統。

OdinII Rx（接收器）

處於 OdinII Rx 無線模式的 Juno Li60 閃光燈可以被另一個設置為 OdinII Tx 模式的 Juno Li60, Juno TTL, Mitros+ 閃

光燈或者 Phottix OdinII, Odin Lite 發射器觸發。同時支持 OdinII Tx for Canon、for Nikon、for Sony、for Pentax 發射端信號，並支持離機高度同步（HSS)，非常方便於使用者體驗。

註：Odin II 發射器，Mitros+ 佳能，尼康或索尼需要使用 Odin Z 系統 。

Ares II Rx（接收器）

處於 AresII RX 無線模式的 Juno Li60 閃光燈可以被 Phottix AresII 發射器和 Phottix OdinII 發射器觸發，也可以被處於 OdinII TX 無線模式的 Juno Li60 閃光燈觸發。

S1 / S2 Rx （從屬）—光感

處於 S1 / S2 Rx 模式的 Juno Li60 閃光燈可以被附近的閃光燈發出的 M 手動模式閃光觸發。

請注意

1. Juno Li60 閃光燈不能被 Phottix Strato、Ares 發射器、odin 發射器觸發。

2. 在模式選擇介面，如果沒有按下“OK 按鈕”確認並且約 12 秒內沒有任何按鍵操作，閃光燈將會自行進入無線模式選項。

OdinII Tx（發射器模式）

當 Juno Li60 閃光燈設置為 OdinII Tx 發射模式時，該閃光燈將可以安裝在相機上，並且可以通過該主控閃光燈設置其自身的和從屬閃光燈的閃光模式為 M。它可以控制三組（A、B、C, D）從屬閃光燈，可以對設置為 Odin II Rx 無線模式的 Juno Li60 從屬閃光燈或者其他安裝在 OdinII 接收器上的相容閃光燈進行 M 模式下的閃光功率調節， 同時還可以調整主燈和從燈的燈頭焦距。

OdinII Tx 模式介面

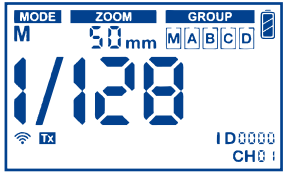

使用 OdinII Tx 模式

選擇 OdinII Tx 模式後（請參見上面的圖片）

1. 按組別按鈕 (Gr) 將會在 M（主燈閃光）、A、B、C、D 之間循環 切換。

2. 選定一組後，按“MODE”按鈕，可使該組模式在 M（手動）和 OFF 之間迴圈切換。

3. 轉動“選擇撥盤”可以調節功率水準（在 1/128 到 1/1 之間以 1/3 檔為增量進行調節）。

4. 按“OK 按鈕”確定並退出調節介面。

OdinII Tx 模式下調節燈頭焦距

1. 按 Gr 按鈕，將會在 M（主燈）、A、B、C、D 之間循環切換。

2. 按 Zm 按鈕，將會進入 zoom 參數調節介面。

3. 轉動“選擇撥盤”，依次切換至 20mm, 24 mm, 28 mm, 35 mm, 50 mm, 70 mm, 80 mm,105mm,135mm 和 200mm 模式。

4. 按 OK 按鈕確定並退出 zoom 調節介面。

設置傳輸頻道

1. 按 Ch 按鈕進入傳輸頻道選擇狀態。

2. 轉動“選擇撥盤”，將會在 CH 1-32 頻道之間迴圈切換。

3. 按”OK 按鈕” 確定並退出頻道調節。

設置 ID 碼

1. 按 Ch 按鈕直至進入 ID 碼設置介面。

2. 按“OK 按鈕”選擇 ID 碼位元數；轉動“選擇撥盤”選擇 ID 碼數。

3. 按 OK 按鈕確定並退出 ID 碼調節介面。

OdinII Rx(接收器) 模式

當選擇 OdinII RX 無線模式的 Juno Li60 閃光燈，將會被其他處於 OdinII Tx 發射模式下的 Juno Li60, Juno TTL, Mitros+ 閃光燈、OdinII、Odin Lite 發射器控制和觸發。

OdinII Rx 模式介面

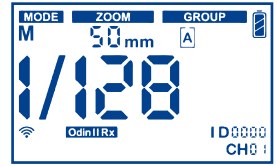

改變頻道、ID 和組別

1. 按 Ch 按鈕， 轉動“選擇撥盤”可以切換 CH1-32 頻道。

2. 按Gr按鈕, 進入設置介面 ,再按Gr按鈕切換組別A、B、C、D。

3. 按 C.Fn 按鈕 直至進入 ID 設置介面，按“C.Fn 按鈕”可以選擇 ID 位元數；轉動“選擇撥盤”可以選擇 ID 碼數，按 OK 按鈕退出 ID 介面。

請注意：

- Juno Li60 在 OdinII RX 模式下支援無線 HSS 快門高速同步。需要配合 Juno TTL, Mitros+ 閃光燈、OdinII 發射器控制和觸發。

Ares II Rx（接收）模式介面

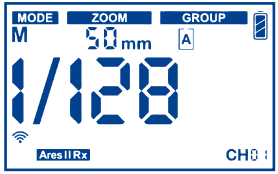

當選擇 Ares II Rx 無線接收器模式後，Juno Li60 閃光燈將可以由處於相同頻道和設置了對應組別的 Phottix AresII 的發射器觸發，也可以由 OdinII 發射器或處於 OdinII TX 模式的 Juno Li60 閃光燈觸發。

改變頻道、ID、組別、功率和閃光模式

1. 按 Ch 按鈕，轉動“選擇撥盤”可以切換 CH1-16 頻道，按“OK 按鈕”退出選擇。

2. 按 Ch 按鈕 直至進入 ID 設置介面，按“OK 按鈕”可以選擇 ID 位元數；轉動“選擇撥盤”可以選擇 ID 碼數，按 OK 按鈕退出 ID 介面。

3. 按 Gr 按鈕，可以切換組別 A、B、C、D。按“OK 按鈕”退出選擇。

4. 按 OK 按鈕 進入功率選擇狀態，轉動“選擇撥盤”調節閃光燈功率在 1/1 至 1/128 之間以 1/3 檔為增量進行調節。再次按 OK 按鈕退出功率調節。

5. 處於 AresII Rx 介面的閃光燈， 按“MODE” 鍵切換閃光模式 M、Multi。

請注意

在 Ares II Rx（接收）模式下，閃光燈不支援 TTL 功能、高速同步、無線控制閃光功率和自動變焦功能。選擇

Ares II Rx 模式後，閃光功率水準和 zoom 值必需手動調節。在 CH1-4 不能設 ID 碼，CH5-16 可設 ID 碼。

S1 /S2 Rx 光感從屬模式

處於 S1/S2 Rx 模式的 Juno Li60 閃光燈可以被附近的閃光燈發出的 M 手動模式低速閃光觸發。

改變功率水準和焦距：

1. 改變功率水準：按 OK 按鈕 進入功率選擇狀態，轉動“選擇撥盤”調節閃光燈功率水準在 1/1 至 1/128 之間以1/3 檔為增量進行調節）。再次按OK按鈕退出功率調節。

2. 改變焦距：按 Zm 按鈕 進入燈頭焦距調節狀態。轉動選擇撥盤將在 20-200mm 焦距之間切換。按“OK 按鈕”返回主功能表。

六、其他功能

自動存儲功能

閃光燈能夠保存閃光燈設置。即使關機重啟後，模式、功率水準等設置將會保存在閃光燈內。

設置閃光燈變焦

閃光燈變焦方式：手動變焦，用戶可自行設置閃光燈頭焦距。

設置步驟：

1. 按 Zm 按鈕，進入變焦調整狀態。

2. 轉動“選擇撥盤”將閃光燈頭變焦設置所需的手動變焦值。

3. 完成設置後，按 “OK 按鈕”退出。

測試閃光按鈕

按測試閃光按鈕將會觸發閃光燈閃光，這可用於手動模式下測光。在無線主控模式下，按測試按鈕將會觸發由主控閃光燈控制的設置為同一個頻道的從屬閃光燈。

自動睡眠功能

閃光燈具備自動睡眠功能來節省電池電量。

1. 在非無線從屬模式下，10 分鐘沒有按鍵操作或沒有被引閃，閃光燈將進入自動待機模式，液晶顯示幕將無顯示，按閃光燈上的測試按鈕可喚醒閃光燈。

2. 在無線從屬模式下，如果無按鍵操作或沒有被引閃，閃光燈在 10 分鐘後將進入從屬待機模式，液晶顯示幕上將顯示 SL，全按相機快門按鈕或按主控閃光燈上的測試按鈕可喚醒從屬模式下的閃光燈。您可以選擇自動睡眠時間。

七、自訂功能

自訂功能可以按照你的拍攝喜好自訂閃光燈功能。

編輯自訂功能步驟如下：

1. 按 C.Fn 按鈕進入自訂功能功能表螢幕。

2. 按 C.Fn 按鈕可以選擇自訂功能功能表項目。

3. 按“OK 按鈕”後，轉動“選擇撥盤”可在功能表內改變自訂功能，再次按“OK 按鈕”退回上一級。

4. 按 C.Fn 按鈕退到主功能表。

LCD 顯示	功能	設定選項	設定描述
SL	省電模式	OFF	不會待命
		10min	閒置10分鐘後進入待命狀態(預設)
		30min	閒置30分鐘後進入待命狀態
		60min	閒置60分鐘後進入待命狀態
Bp	按鍵聲音	OFF/ON	關閉按鍵聲音/開啟按鍵聲音(預設)
ID	ID功能	OFF/ON	OFF: 關閉ID識別碼功能(預設)/ ON: 打開ID識別碼功能

自動背光燈

預設設置，如果沒有按鍵操作，背光燈將會亮 12 秒後熄滅，按任意鍵點亮。

閃光燈電容器的物理變化：

如果閃光燈一段時間內未使用，閃光燈內的電容器會發生物理變化。請每三個月將閃光燈開啟至少 10 分鐘以避免電容器的物理變化。

八、規格參數

閃燈模式:	M(手動) 及Multi (頻閃)
閃光指數:	60 (200mm, ISO100/米)
焦距覆蓋範圍:	20-200mm
焦距調節:	獨立調節焦距
閃燈燈頭角度:	360度旋轉 (180度向左或向右)， 上下(-7度至90度)
同步模式:	前簾同步及高速同步(只限Odin II接收模式)
頻閃模式:	頻率:1-99Hz。頻閃次數: 1-100
回電時間:	0.1-2秒(紅色回電指示燈顯示回電完成)
供電:	鋰離子電池型號 H0802 7.4V 3200mAh
使用時間:	全輸出(1/1) – 約600次
省電模式:	可設定為關, 10分鐘，30分鐘及60分鐘
無線傳輸模式:	頻道: 無線(1-32) 無線模式: Odin II TX, Odin II RX, Ares II RX, S1/S2RX 傳輸範圍: 約100米(無線電) 接收角度: 360度全範圍(無線電), 光學脈衝: +/-40度(水平), +/-30度(垂直)
可調節接收器組別:	(無線電) Gr A/B/C/D
尺寸(長x闊x高):	193x79x60mm
重量:	410g (不包括電池)

九、附錄 :Juno Li60 和其他產品支援對應

	Juno Li60 TX模式		Juno Li60 RX模式
Indra 360/500 Odin Z系統	1. 沒有TTL功能 2. 不支援高速同步 3. 不支援自動測光(auto metering) 4. 功率調節- 可顯示閃燈功率	Odin II發射器(Odin Z系統)	1. 沒有TTL功能 2. 支援高速同步 3. 不支援自動測光(auto metering) 4. 功率調節- 可顯示閃燈功率及支援不同品牌Odin II觸發
Juno TTL RX模式	1. 沒有TTL功能 2. 不支援高速同步 3. 不支援自動測光(auto metering) 4. 功率調節- 可顯示閃燈功率	Juno TTL TX模式	1. 沒有TTL功能 2. 支持高速同步 3. 不支援自動測光(auto metering) 4. 功率調節- 可顯示閃燈功率及支援不同品牌Odin II觸發

	Juno Li 60TX模式		Juno Li60 RX模式
Juno Li60 @ RX模式 (Odin Z系統)	1. 沒有TTL功能 2. 不支援高速同步 3. 不支援自動測光(auto metering) 4. 功率調節- 可顯示閃燈功率	Juno Li60 @ TX模式 (Odin Z系統)	1. 沒有TTL功能 2. 不支援高速同步 3. 不支援自動測光(auto metering) 4. 功率調節- 可顯示閃燈功率
Odin II接收器 (Odin Z系統)	不支援	Odin Lite TX	1. 沒有TTL功能 2. 不支援高速同步 3. 不支援自動測光(auto metering) 4. 功率調節- 可顯示閃燈功率

配件列表：

1. Juno Li60 閃光燈 X 1

2. Juno Li60 專用充電池 H0802 (7.4V 3200mAh)

3. 充電器 H0803

4. 充電器專用適配器 MKS-120-1500
   (包括 US / EU / UK 插頭)

5. 布包

6. 白色柔光罩

7. 熱靴支架

8. 說明手冊

www.phottix.com

Printed in China

FCC STATEMENT :

This device complies with Part 15 of the FCC Rules. Operation is subject to the following two conditions:
(1) This device may not cause harmful interference, and
(2) This device must accept any interference received, including interference that may cause undesired operation.
Warning: Changes or modifications not expressly approved by the party responsible for compliance could void the user's authority to operate the equipment.

NOTE: This equipment has been tested and found to comply with the limits for a Class B digital device, pursuant to Part 15 of the FCC Rules. These limits are designed to provide reasonable protection against harmful interference in a residential installation. This equipment generates uses and can radiate radio frequency energy and, if not installed and used in accordance with the instructions, may cause harmful interference to radio communications. However, there is no guarantee that interference will not occur in a particular installation. If this equipment does cause harmful interference to radio or television reception, which can be determined by turning the equipment off and on, the user is encouraged to try to correct the interference by one or more of the following measures:

Reorient or relocate the receiving antenna.

Increase the separation between the equipment and receiver.

Connect the equipment into an outlet on a circuit different from that to which the receiver is connected.

Consult the dealer or an experienced radio/TV technician for help.

RF warning statement:
The device has been evaluated to meet general RF exposure requirement. The device can be used in portable exposure condition without restriction.