EMC Projects
UK Competent/Notified Body (EMC, R&TTE, Noise)

Commercial In Confidence

TEST REPORT No: P3695/2

Customer/Applicant:	Merrychef Limited
Address:	Station Road West Ash Vale Aldershot Hampshire GU12 5XA
Subject:	**ELECTROMAGNETIC COMPATIBILITY**
Customer Ref:	24290
Manufacturer:	Merrychef Limited
Product:	Micro Wave Combination Oven - FCC ID : PCV 402M2086DK1GM (US)
Model/Trade Name:	Mealstream
Model No/Type:	402M (208V 60Hz)
Serial No/Lot No:	C0004304
Tests Carried Out:	CFR 47 Part 18 Sections 18.305 & 18.307

This Report applies only to the above referenced EQUIPMENT and details the tests applied using test equipment calibrated to traceable National Standards and is not indicative of the qualities of identical or similar products

Report Author:	F Barkas	**Checked By:**	O.W.Cockram
Title:	(EMC Engineer)	**Title:**	(General Manager)
Signature		**Signature**	
Issue Date:	Aug 2004		

Tests marked "NUA" in this report are not included in the UKAS accreditation schedule for our laboratory. Opinions and interpretations express herein are outside the scope of UKAS accreditation. This Report is for the exclusive use of the Customer detailed and should not be reported except in full without written authority of EMC Projects Ltd.

EMC Projects Ltd.
Holly Grove Farm, Verwood Road,
Ashley, Ringwood, Hants, BH24 2DB
Tel: 01425 479979 Fax: 01425 480637
E-mail: enquires@emc-projects.co.uk
Website: www.emc-projects.co.uk

CIVIL AVIATION AUTHORITY A1/9411/93

UKAS TESTING 1107

EMC Projects is a subsidiary of Cape Engineering UK Ltd. Registered office Rothwell Rd. Warwick CV34 5JX

Report Summary

Report No:	P3695/2
Test Standard:	MPT-5 and CFR 47 Part 18 Sections 18.305 & 18.307
Carried Out At:	EMC Projects Ltd., Ringwood, Hants, BH24 2DB
Equipment Tested:	Mealstream
Model No:	402M (208V 60Hz)
Serial No:	C0004304
Software Version:	-
Carried Out On:	5-7th May, 26–27th May, & 29th June 2004
Test Engineer:	F Barkas
In Attendance:	Mr Paul Harrison

SUMMARY of RESULTS

The Table below depicts a summary of the tests and test results detailed in this report.

Test	Test Type	Specification & Issue	Result	Page	Levels/Comments
1	Power Output & Frequency	MPT-5	Pass 1023.26Watts	11-13	2.45GHz.+/- 50MHz
2	Conducted Emissions	CFR 47 Part 18 Section 18.307 (b) 10-1-03 Edition Limits	Pass Within 3dB of the limit	14-18	208V-60Hz Supply
3	Radiated Emissions	CFR 47 Part 18 Section 18.305(b) 10-1-03 Edition Limits, ISM greater than 500W Limits	Pass Within 4.5dB of the limit	19-27	10m & 3m Open Area Test Site

CONTENTS PAGE

Report Summary 2

1. INTRODUCTION 5
2. MODES OF OPERATION 5
3. GENERAL TEST SETUP 5
3.1 Figure 1 - Block Diagram of EUT Set-up 5
3.2 Conducted Emissions (208 V System) 6
3.2.1 Figure 1 - General Test Set-up - Table Top Equipment 7
3.3 Radiated Emissions (208 V System) 8
3.3.1 Figure 1 - OATS General Test Set-up 8
4. TEST EQUIPMENT 8
5. AMBIENT CONDITIONS 8
6. TEST PROCEDURES 9
6.1 Power Measurement (208 V System) 9
6.2 Conducted Emissions (208 V System) 9
6.3 Radiated Emissions (208 V System) 9
7. TESTS CARRIED OUT 10
8. TEST RESULTS 11
8.1 Test 1 Power Output & Fundamental Frequency (208 V System) 11
8.1.1 Test 1a Power Output (208 V System) 11
8.1.2 Test 1b Fundamental Frequency (208V System) 11
8.1.3 Test 1 - Test Equipment Used 11
8.1.4 Test 1b - Figure 1 - Set-up Photographs 12
8.1.4.1 Test 1b - Figure 2 – 208 V Oven – 2.4 GHz-2.5 GHz OATS 13
Emission Measurements Uncorrected Ave Detector 13
8.2 Test 2 - Conducted Emissions 208 V-60 Hz Supply 14
8.2.1 Test 2 - Test Equipment Used 14
8.2.2 Test 2 - Figure 1 - Set-up Photographs 15
8.2.2.1 Test 2 - Figure 2 – 208 V-60 Hz – Setting 100% - Live QP Detector 16
8.2.2.2 Test 2 - Figure 3 – 208 V-60 Hz – Setting 100% - Live Ave Detector 17
8.2.2.3 Test 2 - Figure 4 – 208 V-60 Hz – Setting 100% - Neutral QP Detector 18
8.3 Test 3 - Radiated Emissions 30 MHz to 25 GHz (208 V Supply) 19
8.3.1 Test 3a - Radiated Emissions 30 MHz to 1 GHz 19
8.3.2 Test 3a - Test Equipment Used 19
8.3.3 Test 3a - Figure 1 - Set-up Photographs 20
8.3.3.1 Test 3a - Figure 2 – 208 V Setting 100% - 30-230 MHz Screened Room 21
Peak Detector Horizontal Measurements Uncorrected at Approx. 1 metre from EUT 21
8.3.3.2 Test 3a - Figure 3 – 208 V Setting 50% – 200-1000 MHz Screened Room 22
Peak Detector Horizontal Measurements Uncorrected at Approx. 1 metre from EUT 22
8.3.3.3 Test 3a - Figure 4 - Radiated Emissions (Corrected for 10m OATS) 23
8.3.3.4 Test 3a - Table 1- Radiated Emissions, Data (Corrected for 10m OATS) 23
8.3.4 Test 3b - Radiated Emissions 1 GHz to 25 GHz 24
8.3.5 Test 3b- Test Equipment Used 24

8.3.6 Test 3b - Figure 1 - Set-up Photographs 25
8.3.6.1 Test 3b - Figure 2-208 V Setting 100% – 1-18 GHz Screened Room 26
Peak Detector Uncorrected at 1 metre from EUT. 26
8.3.6.2 Figure 3 – 208 V - Radiated Emissions Corrected 27
8.3.6.3 Test 3b - Table 1- Radiated Emissions, Data 27
9. CONCLUSIONS 27
10. ANNEX A - TEST EQUIPMENT LIST 28
11. ANNEX B - CORRECTION FACTORS 29
11.1 Antenna Correction Factors BA3 30 - 1000 MHz 29
11.2 Antenna Correction Factors DRGFS 1 - 18 GHz 30
11.3 Antenna Correction Factors EMCO 18 - 40 GHz 31

1. INTRODUCTION

This report details the results of the Electromagnetic Compatibility (EMC) tests carried out by EMC Projects Ltd as requested by Merrychef Limited. The Mealstream 402M is a Microwave Combination Oven, (EUT) manufactured by Merrychef Limited operating from a 208V ac supply. Testing was carried out to the requirements of CFR 47 Part 18, subpart C, Sections 18.305 Radiated Emissions, and 18.307 Conducted Emissions in accordance with the requirements of FCC/OST MP-5 (1986) and ANSI 63.4 (2001).

EMC Projects Ltd. is an UKAS accredited EMC Test House; a CAB recognised by the EU-US MRA Joint Committee and is registered with the FCC, registration No 90573.

2. MODES OF OPERATION

For the duration of the testing, the EUT was powered from a 208V-60Hz supply, operating modes were heater on, and the microwave on 100%, 75%, 50% and 25% of full power. The EUT load when tested on microwave, consisted of various quantities of tap water in a polypropylene container as required in MP-5.

3. GENERAL TEST SETUP

The EUT was set-up for testing as described below and shown in the set-up diagrams and photographs.

A block diagram of the EUT set-up is shown in figure 1 detailing cable connections. A dummy load of tap water was placed in the oven. Worse test condition, were assessed for each test required. The only cable connected to the EUT was the mains cable and this was connected continuously during testing.

The method used to calculate the amount of tap water to be used as a dummy load and the type of container, was as detailed in MP-5 Para 4.1.

3.1 Figure 1 - Block Diagram of EUT Set-up

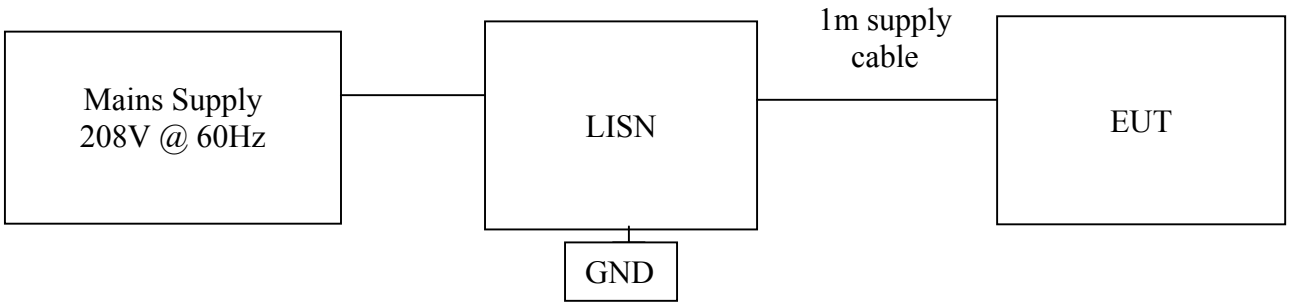

3.2 Conducted Emissions (208 V System)

The EUT being Table Top Equipment was set-up upon a non-metallic table measuring 800 mm x 800 mm, 800 mm above the conducting ground plane and at least 400 mm from the vertical conducting surface in Screened Room No 7, as indicated in the test set-up and set-up photographs.

The EUT was powered from a filtered 208V-60Hz supply via Line Impedance Stabilizing Networks (LISN's). The LISN was mounted and bonded to the conducting ground plane 800mm from the EUT. All unused 50-Ohm connectors of the LISN were terminated with resistive 50-Ohm terminations.

If necessary any excess length of the EUT's supply and interconnecting cables were folded back and forth at the centre of the cable to produce a bundle 40cm in length to ensure the overall length did not exceed 1m.

The EUT ground (safety) connection was connected to the ground at the LISN, through the conductor provided in the supply lead.

3.2.1 Figure 1 - General Test Set-up - Table Top Equipment

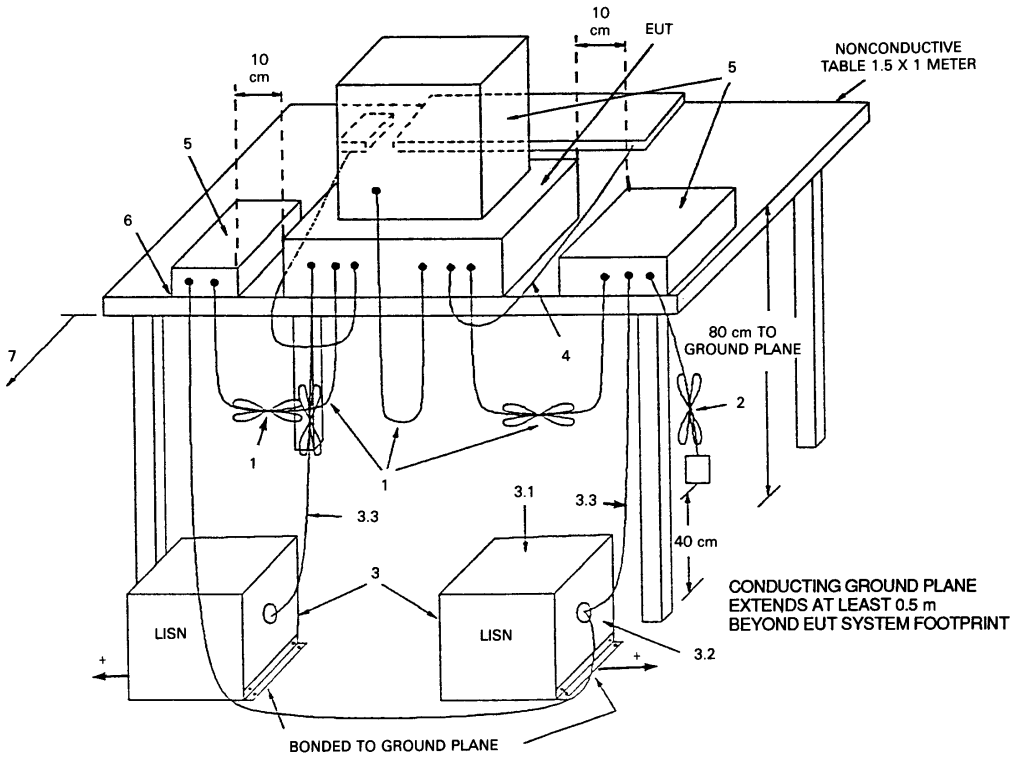

†LISNs may have to be moved to the side to meet 3.3 below.

LEGEND:

1. Interconnecting cables that hang closer than 40 cm to the ground plane shall be folded back and forth forming a bundle 30 to 40 cm long, hanging approximately in the middle between ground plane and table.
2. I/O cables that are connected to a peripheral shall be bundled in center. The end of the cable may be terminated if required using correct terminating impedance. The total length shall not exceed 1 m.
3. EUT connected to one LISN. Unused LISN connectors shall be terminated in 50 Ω. LISN can be placed on top of, or immediately beneath, ground plane.
   3.1 All other equipment powered from second LISN.
   3.2 Multiple outlet strip can be used for multiple power cords of non-EUT equipment.
   3.3 LISN at least 80 cm from nearest part of EUT chassis.
4. Cables of hand-operated devices, such as keyboards, mouses, etc., have to be placed as close as possible to the host.
5. Non-EUT components being tested.
6. Rear of EUT, including peripherals, shall be all aligned and flush with rear of tabletop.
7. Rear of tabletop shall be 40 cm removed from a vertical conducting plane that is bonded to the floor ground plane (see 5.2).

3.3 Radiated Emissions (208 V System)

Measurements for radiated emissions were carried out on a 10m and 3m Open Area Test Site (OATS) meeting the requirements of Section 5 of ANSI 63.4 (2001).

For preliminary testing radiated emissions were first recorded in an unlined screened room to determine the mode of operation, cable, sub-assembly position, and layout that produced the maximum levels and frequencies of any emissions.

The EUT was then moved to the OATS and placed on a Turntable 800 mm above the conducting ground plane; the lay out was that, previously assessed in the screened room as producing the maximum emissions. This is indicated in the test set-up and set-up photographs.

3.3.1 Figure 1 - OATS General Test Set-up

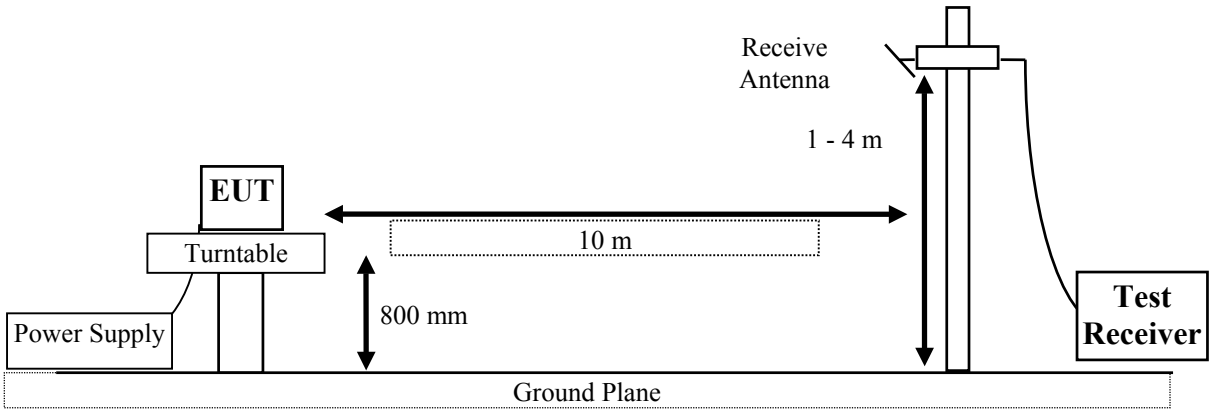

4. TEST EQUIPMENT

All test equipment used for the tests was calibrated and its operation verified prior to being used, a full list of which is shown in Annex A.

Test cable measured attenuation figures and calibrated antenna factors not detailed in other areas of the report are listed in Annex B.

5. AMBIENT CONDITIONS

For the duration of the tests the ambient conditions were recorded and found to fall in the following ranges:

Temperature Recorded:	18-23°C
Humidity Recorded:	37-52%
Atmospheric Pressure:	1010 - 1020mb

6. TEST PROCEDURES

Procedures and methods of test employed were in accordance with the requirements of the specifications applied, using accredited in-house test procedures in accordance with ANSI 63.4:1992 as described below:

6.1 Power Measurement (208 V System)

The EUT shall be set to 100% of full power. A dummy load of tap water, in the style of container and positioned, as required by MP-5 Para 4.1.shall be placed in the microwave oven. The temperature rise of the water over a period of 3 minutes shall be recorded. This temperature rise shall be used to calculate the power output of the microwave. The calculated power will then be used to determine the radiated limits to be applied.

6.2 Conducted Emissions (208 V System)

The EUT shall be set-up in the screened room as detailed in Para 3, conducted emissions will be recorded on each supply line over the frequency range 150kHz to 30MHz with a receiver bandwidth of 10kHz. The receiver shall be in Peak, Quasi-Peak and Average detector modes as required to ensure compliance with the specification, whilst operating the EUT in the worse state condition.

The EUT dummy load shall be maintained at the level of tap water, using the style of container and positioned in the oven, as required by MP-5 Para 4.1.

The recorded emissions shall be compared against the limits for CFR 47 Part 18.307 (b) all other part 18 consumer devices.

6.3 Radiated Emissions (208 V System)

With the EUT set-up in the screened room as for conducted emissions and operated at maximum power output and differing loads of tap water, frequencies of radiated emissions shall be recorded from the EUT at a distance of 1m in both polarities.

The EUT dummy load's shall be maintained during all testing, at the level of tap water, using the style of container and positioned in the oven, as required by MP-5 Para 4.1.

The EUT will then be taken onto the OATS and the maximum levels of the radiated emissions recorded in preliminary tests will be measured at distances of ether 10 or 3m, with the receive antenna varied between 1 and 4m in height, the antenna in both vertical and horizontal polarisation and the EUT rotated through 360deg.

The recorded emissions shall be compared against the limits for CFR 47 Part 18.305 miscellaneous ISM equipment.

.

7. TESTS CARRIED OUT

The following tests were deemed to be applicable to the EUT and were carried out as detailed in the test results section.

Test	Test Type	Specification & Issue	Levels Comments
1	Power Output & Frequency	MPT-5: 1986	In line with the declared power output & a fundamental frequency of 2.45 GHz +/-50 MHz 208 V-60 Hz Supply
2	Conducted Emissions	CFR 47 Part 18 Section 18.307(b) 10-1-03 Edition	208 V-60 Hz Supply
3	Radiated Emissions	CFR 47 Part 18 Section 18.305(b) 10-1-03 Edition	10m & 3m Open Area Test Site 208 V-60 Hz Supply

8. TEST RESULTS

8.1 Test 1 Power Output & Fundamental Frequency (208 V System)

8.1.1 Test 1a Power Output (208 V System)

The EUT was set-up as shown in figure 1, the microwave set to 100% of full power and a dummy load consisting of 1500milli-litres of tap water contained in a polypropylene beaker was positioned in the centre of the microwave oven; the average temperature rise of the water over 3 periods of 3 minutes was recorded. This temperature rise was used to calculate the power output of the microwave.

The ac-measured current during this test was found to be inline with the manufacturers declared level for the microwave operating at 100% of full power.

In order to calculate the power output the following formula was used:

$$P = \frac{q \times \Delta t}{14.4 \times T} \text{ watts}$$

P = watts	Δt = temperature rise in water (Deg C)29.47
q = quantity of water(cm^3) 1500milli-litres	T = heating time (min) 3

P = 1023.26 Watts without an allowance for the container

8.1.2 Test 1b Fundamental Frequency (208V System)

The 208V EUT was set-up as shown in figure 1, the microwave was set to 100% of full power and a dummy load consisting of 1500milli-litres of tap water contained in a polypropylene beaker was positioned in the centre of the microwave oven. The fundamental frequency was recorded and found to remain within the ISM band of 2.45GHz +/- 50MHz.

8.1.3 Test 1 - Test Equipment Used

The following major items of test equipment were used for the power output & fundamental frequency tests:

DRGFS	SA10	PA5	RX12	RX14	YI5	OATS2

8.1.4 Test 1b - Figure 1 - Set-up Photographs

8.1.4.1 Test 1b - Figure 2 – 208 V Oven – 2.4 GHz-2.5 GHz OATS Emission Measurements Uncorrected Ave Detector

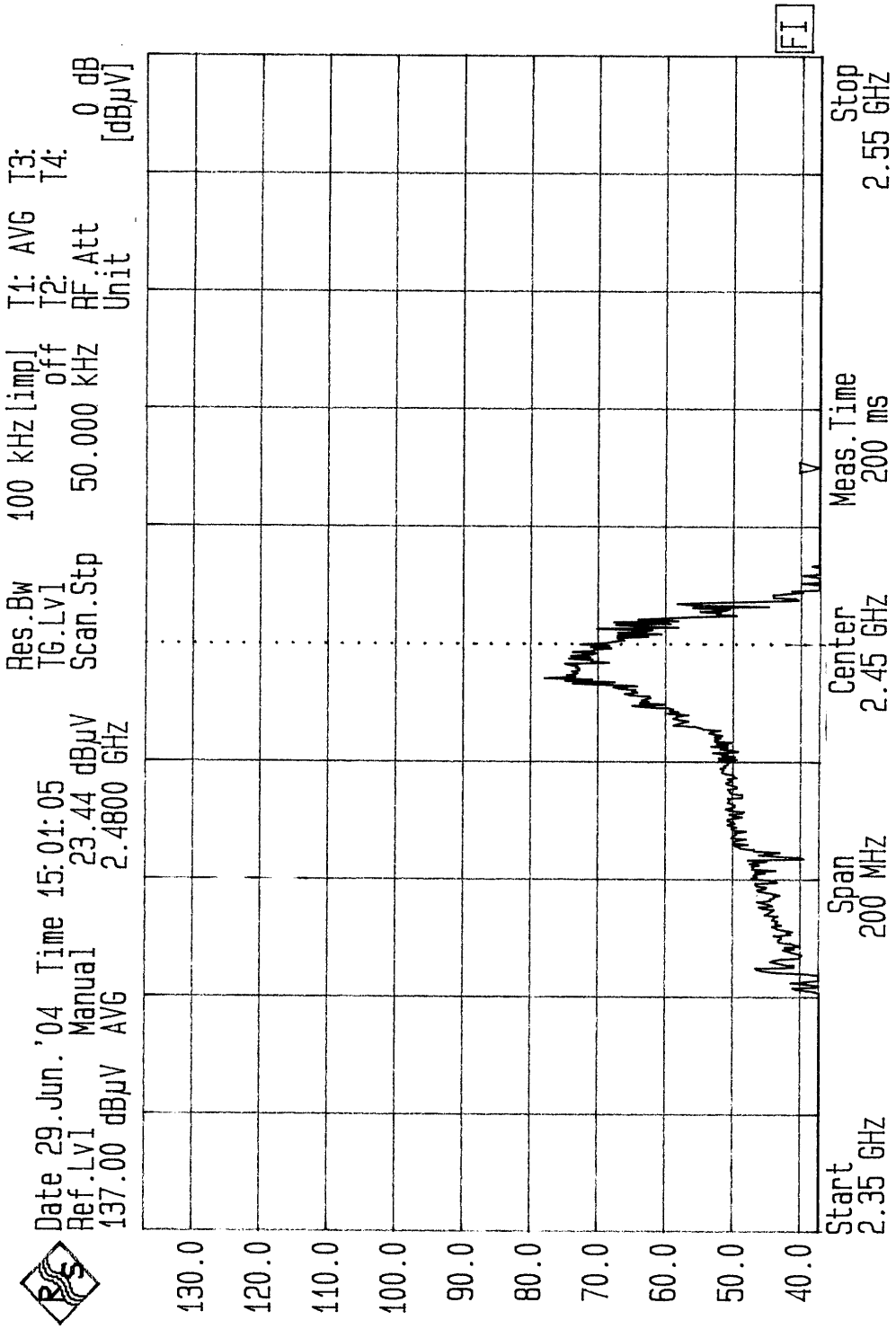

8.2 Test 2 - Conducted Emissions 208 V-60 Hz Supply

The EUT was set-up inside a screened room as detailed below and powered from a filtered 208V-60Hz supply via Line Impedance Stabilization Units (LISN's). The format for the layout was as detailed in Para. 3, set-up diagrams with the actual layout as the photograph in figure 1.

The Test Equipment was verified for calibration and operation before being used.

Prior to carrying out the tests ambient levels were recorded and found to be greater than 6 dB below the required limits.

During the test, the EUT was powered up and operated with 100% of microwave output power. A dummy load of 1050milli-litres of tap water in a polypropylene container was placed in the centre of the EUT

Conducted emissions were recorded on both Live and Neutral supply lines over the frequency range 150 kHz to 30 MHz in accordance with the specification requirements. Emissions were recorded with the EUT operating at 100%, 75%, 50% and 25% of full power. The results depicted in figures 2 - 4 are representative worse case graphs.

Figures 2-4 are representative graphs of the levels of conducted emissions recorded. These and other measurements taken showed that the maximum-recorded emissions in the normal mode of operation were within the required limits.

8.2.1 Test 2 - Test Equipment Used

The following major items of test equipment were used for the conducted emission tests:

LHR	L1/1	L1/2	L1/3	Room 7

8.2.2 Test 2 - Figure 1 - Set-up Photographs

8.2.2.1 Test 2 - Figure 2 – 208 V-60 Hz – Setting 100% - Live QP Detector

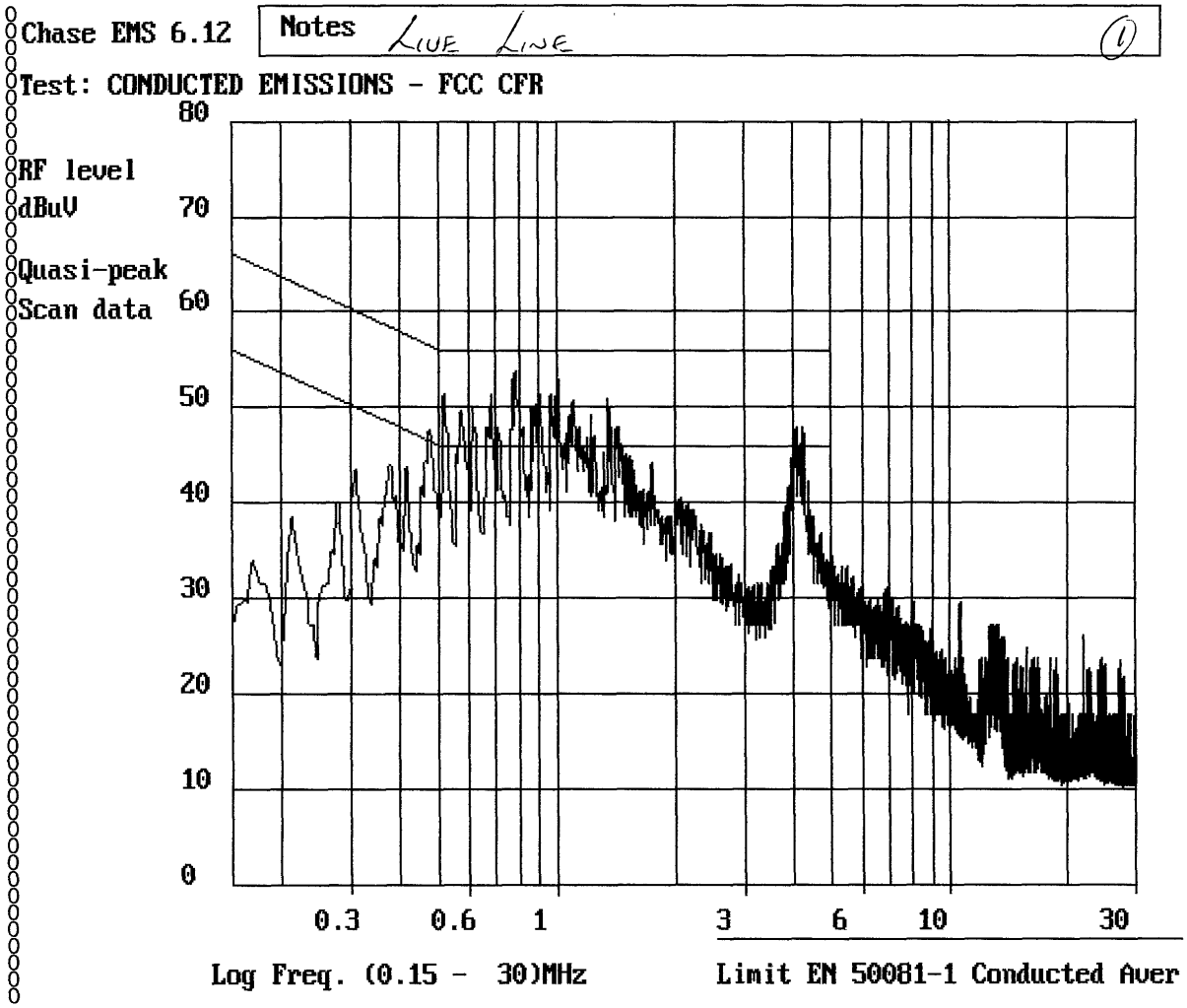

8.2.2.2 Test 2 - Figure 3 – 208 V-60 Hz – Setting 100% - Live Ave Detector

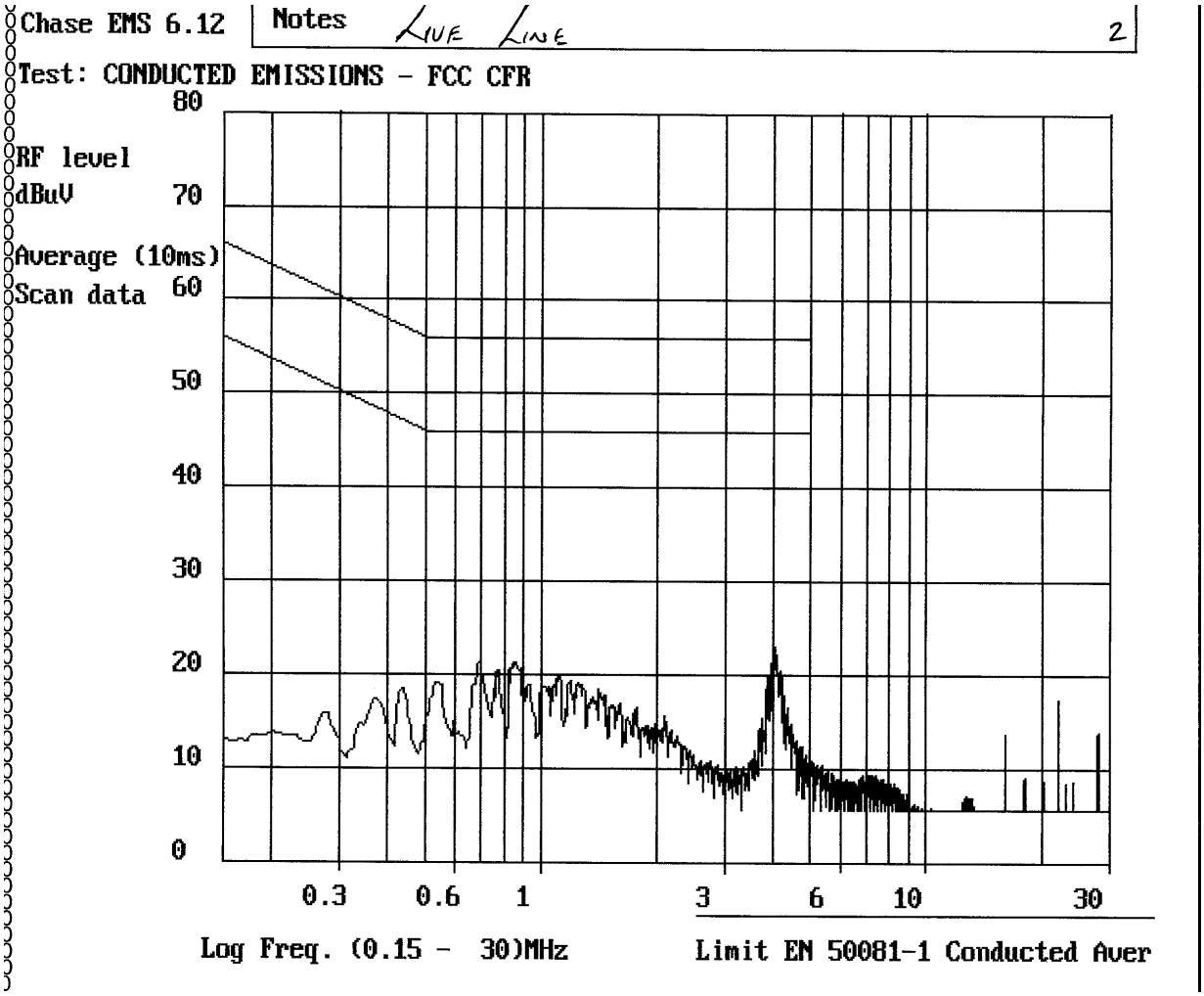

8.2.2.3 Test 2 - Figure 4 – 208 V-60 Hz – Setting 100% - Neutral QP Detector

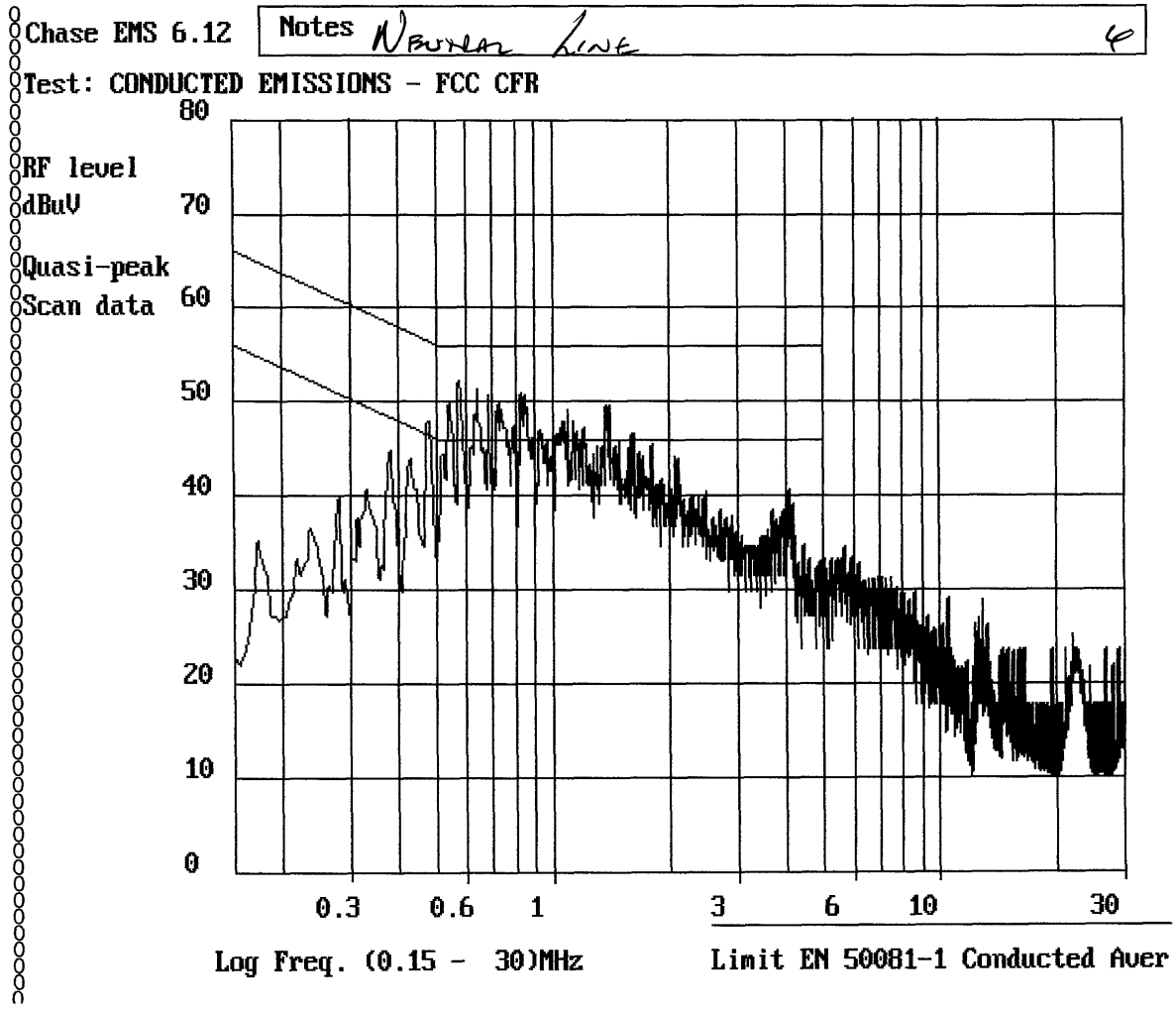

8.3 Test 3 - Radiated Emissions 30 MHz to 25 GHz (208 V Supply)

8.3.1 Test 3a - Radiated Emissions 30 MHz to 1 GHz

Radiated emissions over the frequency range 30 MHz to 1 GHz were recorded at approx.1m from the EUT whilst set-up in a screened room. During this test, checks were carried out to determine the mode of operation and cable configuration most likely to produce the maximum emissions.

The Test Equipment was verified for calibration and operation prior to being used.

During testing the EUT was powered up and operated. The worse case mode of operation was found to be 100%, the heaters being on or off was found to have no effect on the emission levels, testing on the OATS was carried out with heaters off. A dummy load of 1050milli-litres of tap water in a polypropylene container was placed in the centre of the EUT during testing of the microwave function.

The EUT was then set-up on a turn table on the 10m Open Area Test Site (OATS) powered up from a 208 V-60 Hz supply, allowed to stabilize in its worse case mode of operation, as detailed in Para.3, set-up diagrams and the photograph in figure1.

The tests were carried out with a mains cables connected. No other cables were applicable.

Radiated emission tests were repeated over the full frequency range, paying particular attention at those frequencies detected in the screened room test. At each frequency detected, the height and polarization of the receive antenna was adjusted and the turntable rotated to record the maximum level on the receiver.

From figures 2 & 3, it can be seen that inside a screened room with the antenna approx.1m from the EUT emissions were recorded. When the EUT was taken to the OATS emissions above, the ambient were detected and measured; particular attention being paid to the frequencies highlighted by the screen room investigations

No emissions were recorded above the limit line on the OATS. It can therefore be stated that the radiated emissions were found to be within the requirements of the specification.

8.3.2 Test 3a - Test Equipment Used

The following major items of test equipment were used for the radiated emission tests:

SA9	BIC6	LP4	Rx11	BA3	OATS2

8.3.3 Test 3a - Figure 1 - Set-up Photographs

8.3.3.1 Test 3a - Figure 2 – 208 V Setting 100% - 30-230 MHz Screened Room Peak Detector Horizontal Measurements Uncorrected at Approx. 1 metre from EUT

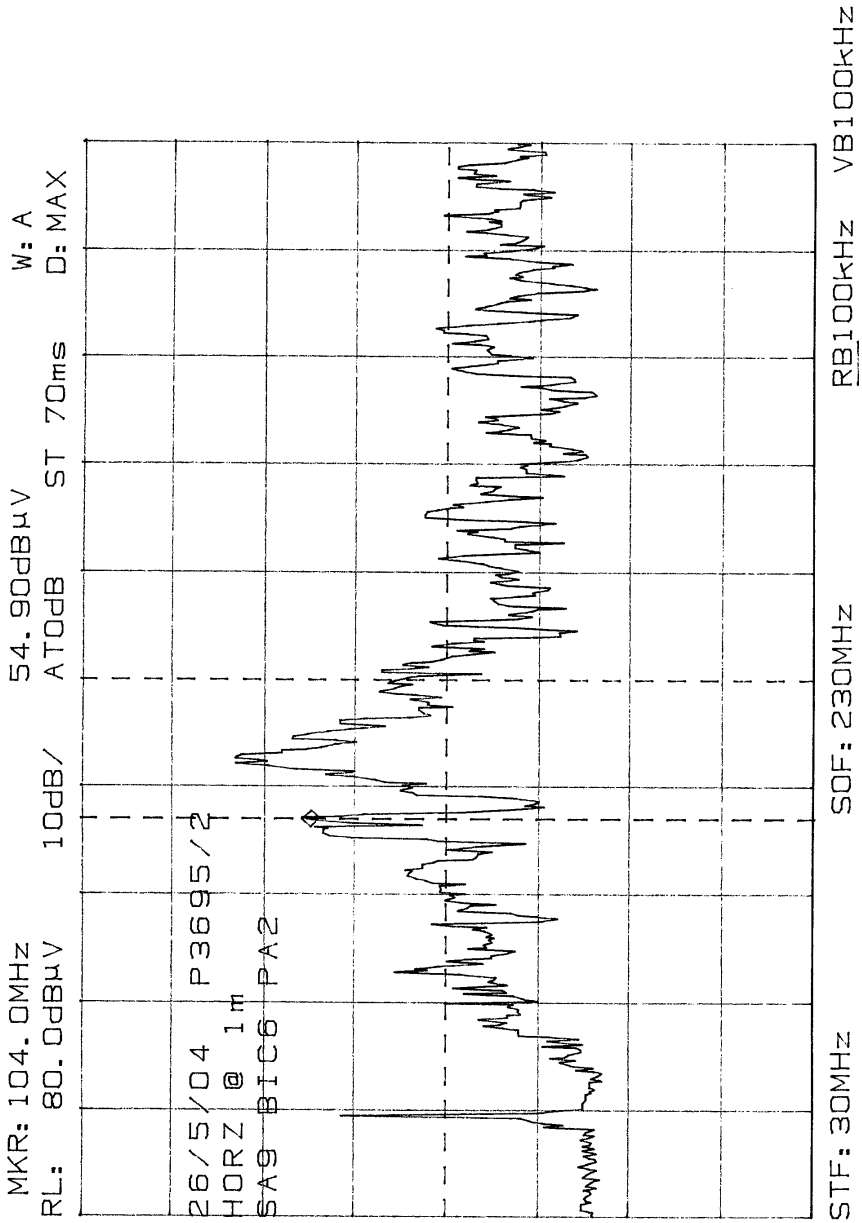

8.3.3.2 Test 3a - Figure 3 – 208 V Setting 50% – 200-1000 MHz Screened Room Peak Detector Horizontal Measurements Uncorrected at Approx. 1 metre from EUT

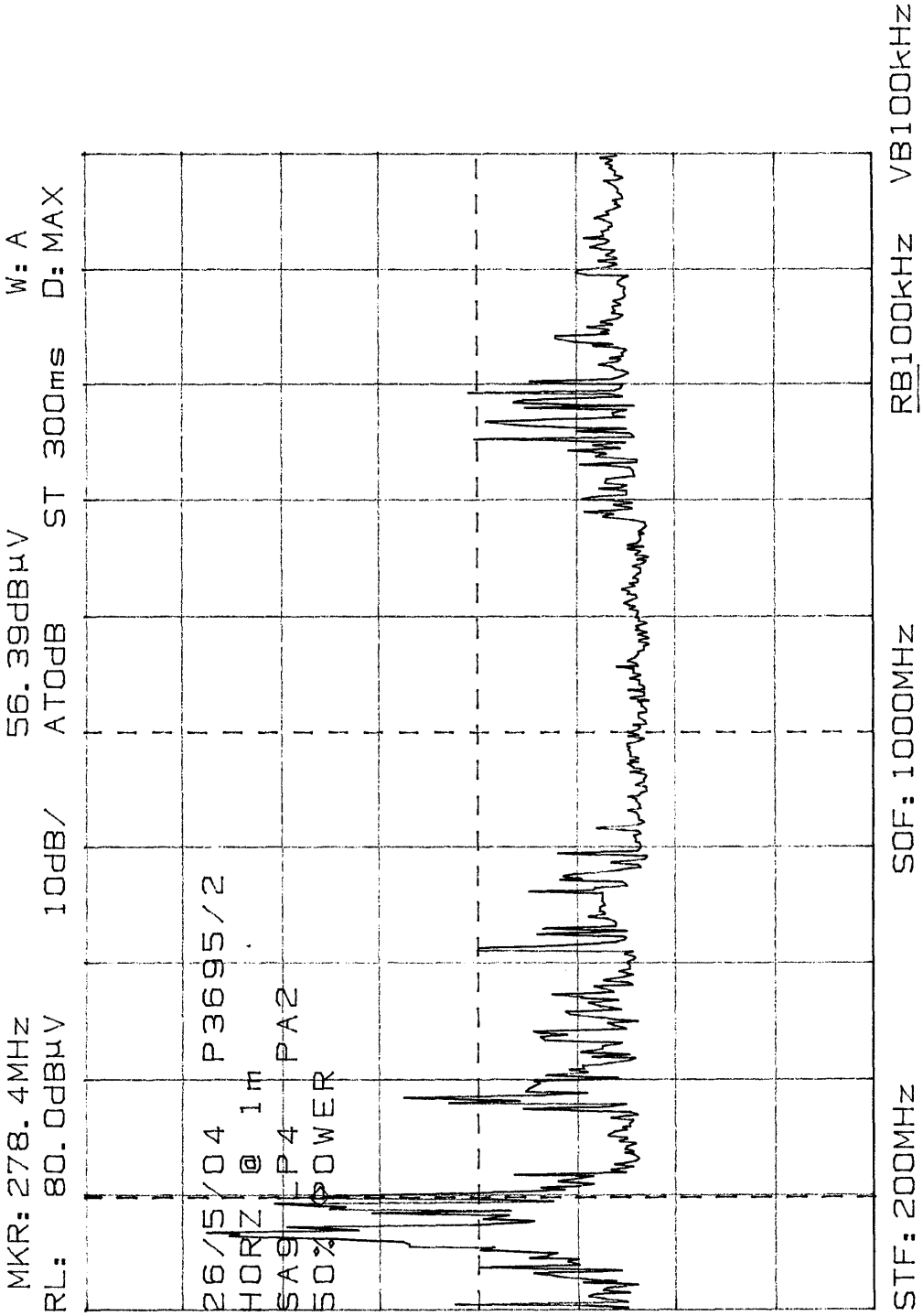

8.3.3.3 Test 3a - Figure 4 - Radiated Emissions (Corrected for 10m OATS)

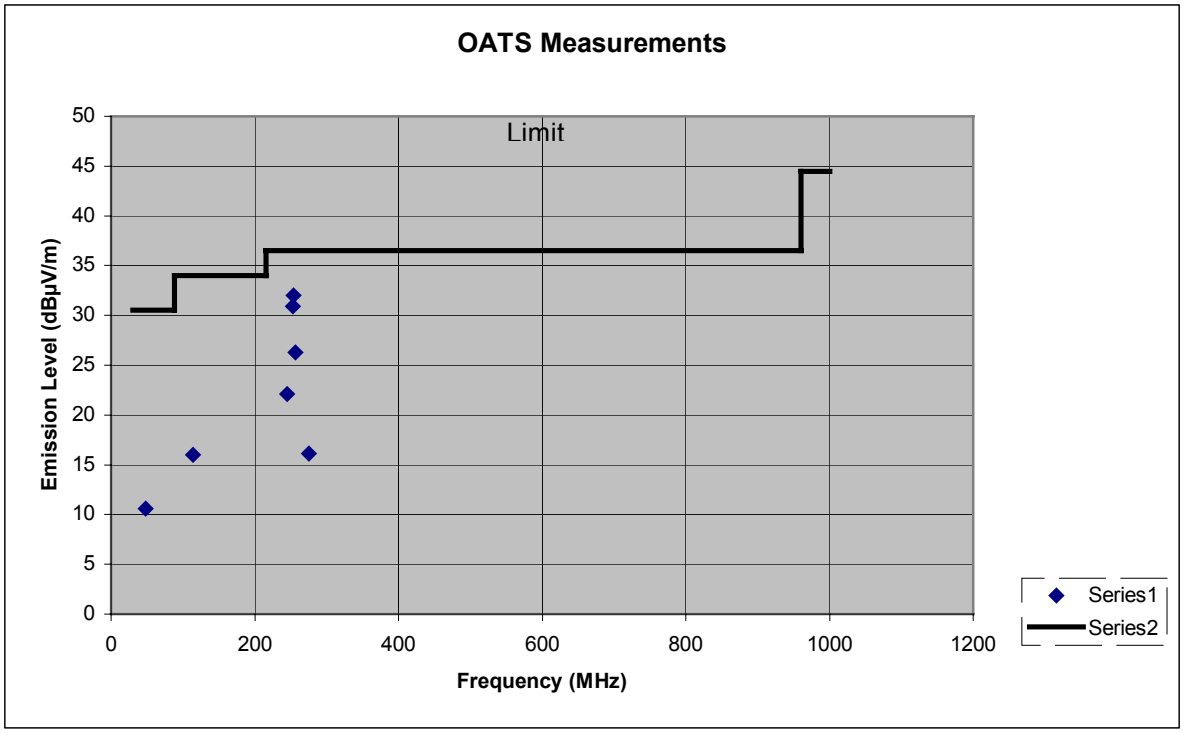

8.3.3.4 Test 3a - Table 1- Radiated Emissions, Data (Corrected for 10m OATS)

Freq MHz	Total dBµV/m	Limit dBµV/m	Reading dBµV/m	Antenna & Cable Correction
30		30.5		
48	10.6	30.5	0.5	10.1
88		30.5		
88		34		
114	16	34	3	13
216		34		
216		36.5		
245	22.1	36.5	7	15.1
253	30.9	36.5	15	15.9
254	32	36.5	16	16
257	26.3	36.5	10	16.3
275	16.1	36.5	0	16.1
960		36.5		
960		44.5		
1000		44.5	37	

8.3.4 Test 3b - Radiated Emissions 1 GHz to 25 GHz

Radiated emissions over the frequency range 1 GHz to 25 GHz were recorded 1m from the EUT whilst set-up in a screened room. During this test, checks were carried out to determine the mode of operation and cable configuration most likely to produce the maximum emissions.

The Test Equipment was verified for calibration and operation prior to being used.

During testing the EUT was powered up and operated in the following modes with heaters on & off, and microwave set at 100% and 50% of full output power. The operation of the heaters was found to have no effect on the emission levels, testing on the OATS was carried out with heaters off. A dummy load of 1050 and 450milli-litres of tap water in polypropylene containers was placed in the centre and right hand corner of the EUT during testing of the microwave function as required by MP-5.

The EUT was then set-up on a turn table on the 3m Open Area Test Site (OATS) powered up from a 208V-60Hz supply, allowed to stabilise in its worse case mode of operation, as detailed in Para.3, set-up diagrams and in the photograph in figure 1.

The tests were carried out with a mains cable connected. No other cables were applicable.

Radiated emission tests were repeated over the frequency range 1-15.5GHz above this frequency band the screened room prescan showed that no OATs emission measurements were required. Particular attention was paid to those frequencies detected in the screened room test. At each frequency detected, the height and polarization of the receive antenna was adjusted and the turntable rotated to record the maximum level on the receiver.

The maximum-recorded levels were corrected for antenna factor, cable losses and amplifier gain if required. The specification limits were then corrected, for distance of the antenna from the EUT and the power of the EUT. This was used to determine compliance with the standard as shown in figures 2-4 and table 1.

From the figures and table, it can be seen that the radiated emissions were found to be within the requirements of the calculated limits:

Limit = 25µV/m @ 300M for 500W
Limit = 71.07dBµV/m @ 3m for a calculated power of 1.023kW

8.3.5 Test 3b- Test Equipment Used

The following major items of test equipment were used for the radiated emission tests:

OATS 2	EMCO	DRGFS	PA5	RX12	RX14	TC7	TC8	SA10

8.3.6 Test 3b - Figure 1 - Set-up Photographs

8.3.6.1 Test 3b - Figure 2-208 V Setting 100% – 1-18 GHz Screened Room Peak Detector Uncorrected at 1 metre from EUT.

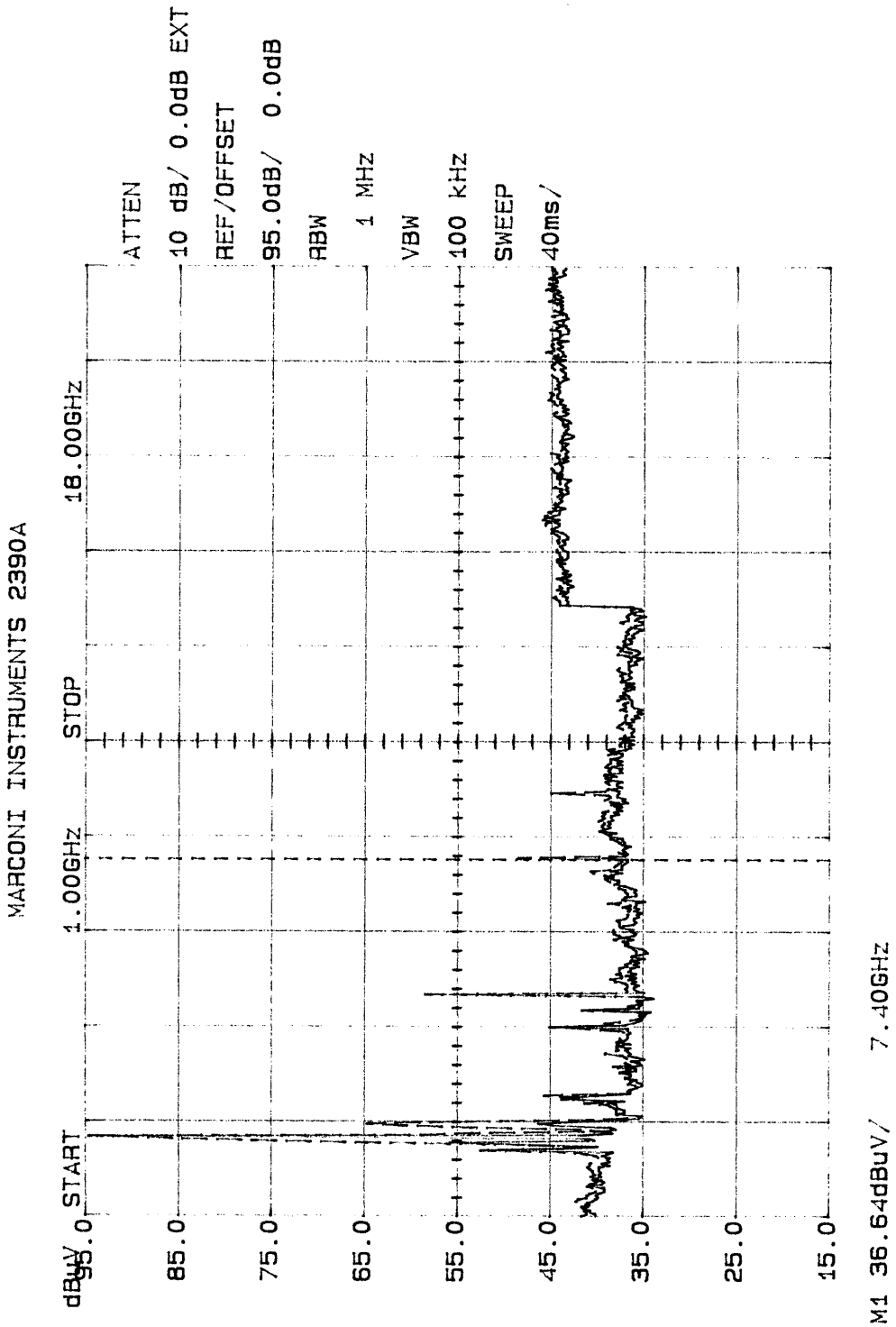

8.3.6.2 Figure 3 – 208 V - Radiated Emissions Corrected

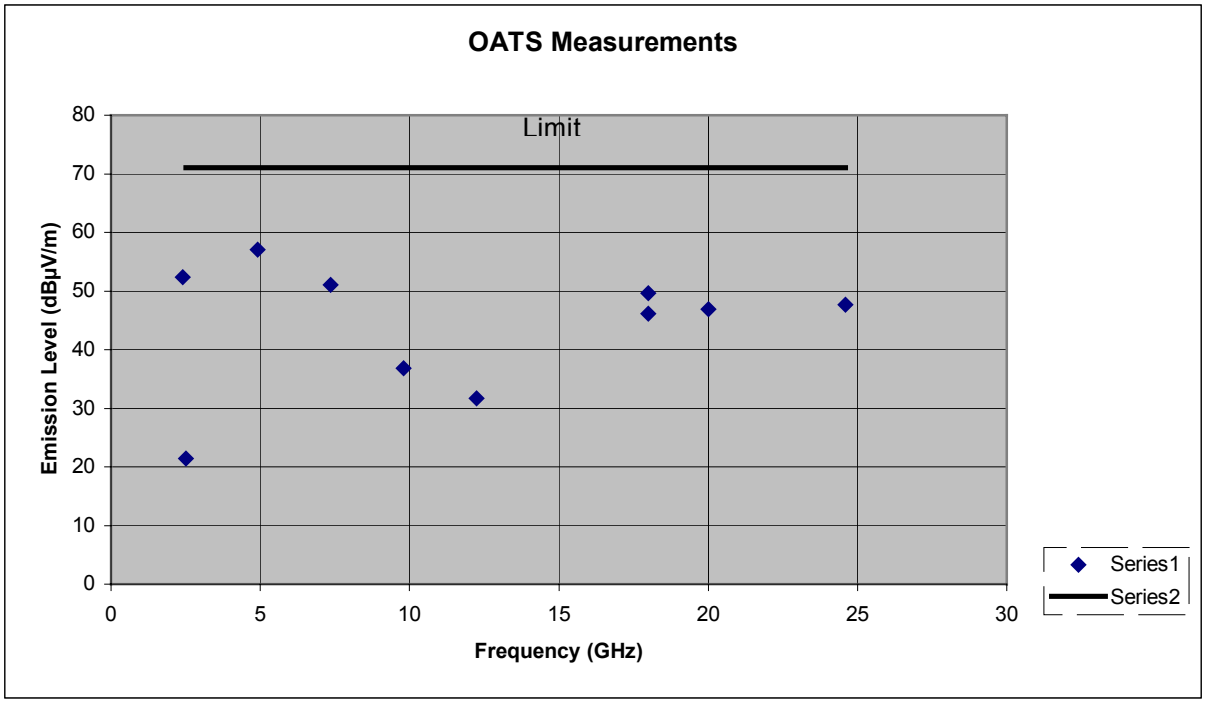

8.3.6.3 Test 3b - Table 1- Radiated Emissions, Data

Freq	Total	Limit	Reading	Distance	Distance	Pre Amp	Cable Correction	Antenna	Antenna
GHz	dBµV/m	dBµV/m	dBµV/m		dB	dB	dB	dB	
2.4	52.4		45	3m	10.5	34.1	2.5	28.5	DRGFS
2.5	21.4	71.07	35	3m	10.5	34.1	2.5	28.5	DRGFS
4.9	57	71.07	54	10m	0	33.9	3.7	33.2	DRGFS
7.35	51	71.07	55	3m	10.5	33.8	4.3	36	DRGFS
9.8	36.8	71.07	38	3m	10.5	34	5.3	38	DRGFS
12.25	31.7	71.07	30	3m	10.5	32.4	5.6	39	DRGFS
18	49.6	71.07	45	1m	20	31.2	7	48.8	DRGFS
18	46.1	71.07	45	1m	20	31.2	7	45.3	3116
20	46.9	71.07	45	1m	20	31.2	7.5	45.6	3116
24.6	47.6	71.07	45	1m	20	31.1	7.5	46.2	3116

9. CONCLUSIONS

The EUT was found to meet the specification requirements detailed when tested to the customer's requirements.

Radiated emissions were recorded close to the required limits and within EMC Projects stated measurement uncertainty.

EMC Projects measurement Uncertainties are: Radiated Emissions: ±4.85 dB

10. ANNEX A - TEST EQUIPMENT LIST

Plant No	Manufacturer	Description	Serial No	Cal Period	Cal Due
BA3	Chase	Bilog Antenna,CBL6111A	1733	24 Months	8 Sept 04
BA4	Chase	Bilog Antenna,CBL6111A	1667	24 Months	27 May 06
BIC6					
DRGFS	EMCO	3115	9701-5093	60 Months	23 April 06
L1/1	EMC Projects Ltd.	CISPR16 9kHz-30MHz (30A,50 /50µH), MIL STD 461D		12 Months	4 Nov 04
L1/2	EMC Projects Ltd.	CISPR16 9kHz-30MHz (30A,50 /50µH), MIL STD 461D		12 Months	4 Nov 04
L1/3	EMC Projects Ltd.	CISPR16 9kHz-30MHz (30A,50 /50µH), MIL STD 461D		12 Months	4 Nov 04
LHR	Chase	Receiver LHR 7000	1028	12 Months	11 Feb 05
LP4					
EMCO	EMCO	Standard Gain Horn Antenna 18-26.5GHz	2011	12 Months	03 Oct 04
OATS2	EMC Projects Ltd.	Open test site 2		12 Months	04 Nov 04
PA2	EMC Projects Ltd.	HF Pre Amplifier	001	12 Months	04 Mar 04
PA5	Hewlett Packard.	8449B Pre Amplifier	3008A00176	12 Months	22 Aug 04
Room1	Ray Proof	Screen room		12 Months	8 Jan 05
Room7	Belling Lee	Screen room		12 Months	8 Jan 05
RX9	Eaton	Field Intensity Metre	0208-82054	12 Months	14 Oct 04
Rx11	Receiver	Chase UHR4000	6114	12 Months	25 Feb 05
RX12	Rhode & Schwarz	Receiver EMI	838494/012	12 Months	24 May 05
RX14	Rhode & Schwarz	Receiver ESMI	839013/003	12 Months	24 May 05
SA9	Anritsu	Spectrum Analyser MS2601B	MT54360	12 Months	07 Oct 04
SA10	Marconi				
TC1		Sealectro cable 065-9AA-2000-00	63703	N/A	N/A
TC7					
TC8					
YI5	Yokogawa	Digital Temperature Indicator	2455	24 Months	26 Nov 04

11. ANNEX B - CORRECTION FACTORS

11.1 Antenna Correction Factors BA3 30 - 1000 MHz

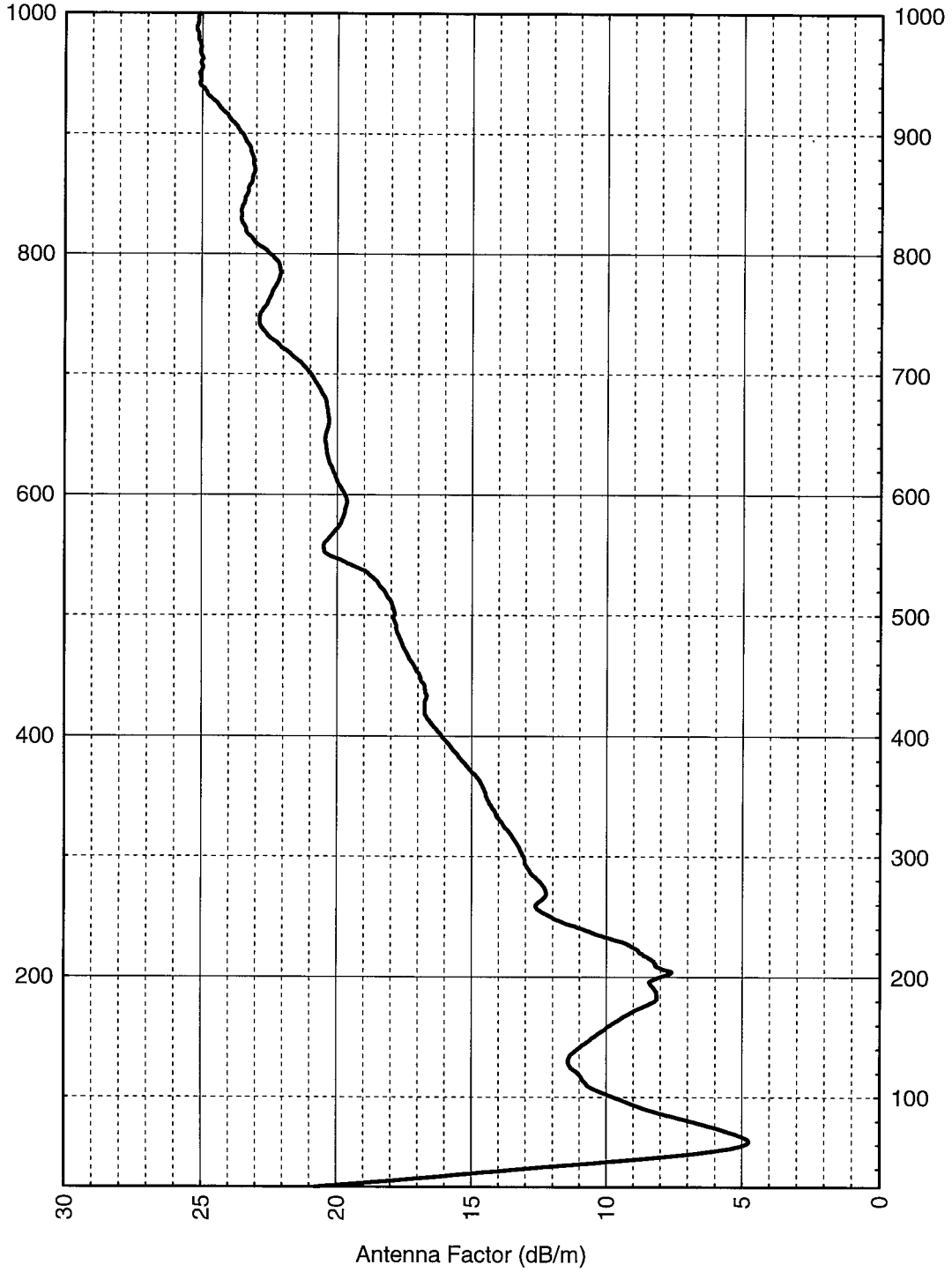

11.2 Antenna Correction Factors DRGFS 1 - 18 GHz

RESULTS

Apparent Gain and Antenna Factor at 3m from the antenna aperture.		
Frequency [GHz]	Gain 3m [dBi]	Antenna Factor [dB (1/m)]
1.0	6.0	24.2
1.5	8.3	25.4
2.0	8.8	27.4
2.5	9.7	28.5
3.0	9.8	30.0
3.5	10.1	31.0
4.0	9.8	32.5
4.5	11.0	32.3
5.0	10.9	33.3
5.5	10.9	34.1
6.0	11.4	34.4
6.5	12.2	34.3
7.0	11.8	35.3
7.5	11.3	36.4
8.0	11.5	36.8
8.5	11.5	37.4
9.0	11.5	37.8
9.5	12.0	37.8
10.0	12.1	38.1
10.5	12.6	38.1
11.0	12.7	38.4
11.5	12.9	38.5
12.0	12.6	39.2
12.5	13.5	38.7
13.0	13.2	39.3
13.5	12.2	40.6
14.0	11.0	42.2
14.5	11.1	42.3
15.0	13.4	40.3
15.5	16.0	38.0
16.0	16.7	37.6
16.5	16.0	38.6
17.0	14.3	40.6
17.5	10.9	44.2
18.0	6.6	48.8

Reference: E01030092

Page 3 of 4

Checked by: A. Beardmore

11.3 Antenna Correction Factors EMCO 18 - 40 GHz

IFR Ltd
SERVICE DIVISION

CALIBRATION RECORD

MANUFACTURER	: EMCO	Type No	: 3116	SERIAL No	: 2011
DESCRIPTION	: Double Ridged Guide Antenna			REF No	: 626568

Table 1

Frequency (GHz)	Antenna Factor (dB/m)	Isotropic Gain (dBi)	Numeric Gain (-)
18.0	45.3	10.0	9.9
18.5	45.5	10.0	10.1
19.0	46.1	9.7	9.2
19.5	46.7	9.3	8.5
20.0	45.6	10.6	11.5
20.5	44.8	11.6	14.5
21.0	44.8	11.9	15.4
21.5	44.8	12.0	16.0
22.0	45.0	12.0	16.0
22.5	45.4	11.9	15.4
23.0	45.5	12.0	15.8
23.5	45.6	12.1	16.0
24.0	45.7	12.1	16.2
24.5	46.2	11.8	15.2
25.0	46.5	11.7	14.7
25.5	46.5	11.8	15.3
26.0	46.8	11.8	15.0
26.5	47.0	11.7	14.6
27.0	46.9	11.9	15.5
27.5	47.3	11.7	14.8
28.0	47.5	11.6	14.5
28.5	47.4	11.9	15.6
29.0	47.5	11.9	15.6
29.5	47.5	12.1	16.3
30.0	47.2	12.5	17.9
30.5	47.3	12.6	18.2
31.0	47.7	12.3	17.2
31.5	48.1	12.1	16.1
32.0	48.9	11.4	13.8
32.5	50.0	10.4	11.1
33.0	50.5	10.1	10.3
33.5	50.7	10.0	10.1
34.0	51.0	9.9	9.7
34.5	50.5	10.4	11.1
35.0	49.7	11.4	13.8
35.5	48.6	12.6	18.3
36.0	47.6	13.7	23.4
36.5	46.7	14.7	29.7
37.0	46.0	15.6	36.4
37.5	45.5	16.2	41.4
38.0	45.6	16.3	42.2
38.5	46.0	15.9	39.0
39.0	46.9	15.2	32.9
39.5	47.8	14.3	26.9
40.0	49.3	12.9	19.6

The limits of uncertainty for the measurement of the Antenna Factor are estimated not to exceed ± 2.0 dB
Unless otherwise stated, the values shown in this certificate are the first and final results, no repairs or calibration adjustments having been carried out.

Repair / Cal By	Stamp	Date
Roger Brian	I.S. 453	03/10/03

---oOo---

Last Page
Intentionally Left
Blank