merrychef

Installation and operating instructions
MAI

This oven is a pre-production prototype model intended for use in field trials only, it must not be sold

DRAFT

MENUKEY2

WARNING

IMPORTANT INFORMATION
READ BEFORE USE
PLEASE SAVE THESE INSTRUCTIONS

Users are cautioned that maintenance and repairs should be performed by a Merrychef authorized service agent using genuine Merrychef replacement parts. Merrychef will have no obligation with respect to any product that has been improperly installed, adjusted, operated or not maintained in accordance with national and local codes or installation instructions provided with the product, or any product that has its serial number defaced, obliterated or removed, or which has been modified or repaired using unauthorized parts or by unauthorized service agents. For a list of authorized service agents, please refer to the inside back page of this booklet. The information contained herein (including design and parts specifications) may be superseded and is subject to change without notice.

PRECAUTIONS TO AVOID POSSIBLE EXPOSURE TO EXCESSIVE MICROWAVE ENERGY

a) Do not attempt to operate this oven with the door open since open-door operation can result in harmful exposure to microwave energy. It is important not to defeat or tamper with the safety interlocks.

b) Do not place any object between the oven front face and the door or allow soil or cleaner residue to accumalate on sealing surfaces.

c) Do not operate the oven if it is damaged. It is particularly important that the oven door close properly and that there is no damage to the (1) door (bent) (2) hinges and latches (broken or loosened) (3) door seals and sealing surfaces.

d) The oven should not be adjusted or repaired by anyone except properly qualified service personnel

Safety instructions 3

Installation instructions 6

Introduction 8

Main features 9-10

Using the oven for the first time 11

Operating instructions: Manual mode 12

Operating instructions: Program mode 13-17

MenuKey: Changing oven programs 18

Daily cleaning 19-20

Technical specification 21

Merrychef USA
2227 Welbilt Boulevard
New Port Richey
FL 34655

Phone: 1-(727) 375-1944
Fax: 1-(727) 569-1574
e-mail: info@merrychefusa.com

PLEASE READ THE FOLLOWING SAFETY INSTRUCTIONS CAREFULLY

DRAFT

IMPORTANT SAFETY INSTRUCTIONS

When using electrical appliances basic safety precautions should be followed, including the following:
WARNING To reduce the risk of burns, electric shock, fire, injury to persons, or exposure to excessive microwave energy:
1. Read all instructions before using the appliance.
2. Read and follow the specific “PRECAUTIONS TO AVOID POSSIBLE EXPOSURE TO EXCESSIVE MICROWAVE ENERGY” FOUND ON PAGE 2.
3. This appliance must be grounded. Connect only to a properly grounded outlet.
See “GROUNDING INSTRUCTIONS” found on page 4.
4. Install or locate this appliance only in accordance with the provided installation instructions
5. Some products such as whole eggs and sealed containers — for example, closed jars — may explode and should not be heated in this oven.
6. Use this appliance only for its intended use as described in the manual. Do not use corrosive chemicals or vapors in this appliance. This type of oven is specifically designed to heat, cook or dry food. It is not designed for industrial or laboratory use.
7. This appliance should not be used by children.
8. Do not operate this appliance if it has a damaged cord or plug, if it is not working properly, or if it has been damaged or dropped.
9. This appliance should be serviced only by qualified service personnel. Contact the nearest authorized service facility for examination, repair or adjustment.
10 Do not cover or block any openings on the appliance including air vents/filters and steam outlet.
11 Do not store this appliance outdoors. Do not use this product near water —— for example, near a kitchen sink, in a wet basement, or near a swimming pool, and the like.
12. Do not immerse the cord or plug in water.
13. Keep the cord away from heated surfaces.
14. Do not let cord hang over edge of table or counter.
15. Either:
    i)When cleaning surfaces of door and oven that comes together on closing the door, use only mild non-abrasive soaps, or detergents applied with a sponge or soft cloth.
    ii)When separate cleaning instructions are provided, see door surface cleaning instructions on page 19 & 20.
16. To reduce risk of fire in the cavity:
    i) Do not overcook food. Carefully attend appliance if paper, plastic or other combustible materials are placed inside the oven to facilitate cooking.
    ii) Remove wire twist-ties from paper or plastic bags before placing bag in oven.
    iii) If materials inside the oven should ignite, keep oven door closed, turn oven off, and disconnect the power cord , or shut off power at the fuse or circuit breaker panel.
    iv) Do not use the cavity for storage purposes. Do not leave paper products, cooking utensils or food in the cavity when not in use.
17. DO NOT operate using microwave only or combination function without food or liquid inside the oven as this may result in overheating and may cause damage.
18. NEVER remove the exterior of the oven.
19. NEVER remove any fixed internal parts of the oven.
20. NEVER tamper with the control panel, door, seals, or any other part oven.
21. DO NOT obstruct air vents/filters or steam outlet.
22. NEVER hang dish towels or cloths on any part of the oven.
23. If the door seals are damaged, the oven must be repaired by an approved Service Agent.
24. If the power cable is damaged in any way it MUST be replaced by an approved Service Agent.
25. When handling hot liquids, foods, and containers, care should be taken to avoid scalds and burns.
26. When heating liquids using microwave only or combination function, the contents should be stirred prior to heating to avoid eruptive boiling.
27. Feeding bottles and baby food jars should be opened when heating, the contents stirred or shaken and the temperature checked prior to consumption to avoid burns.
28. Never use the oven to heat alcohol, e.g. brandy, rum etc. Also, food containing alcohol can more easily catch fire if overheated.
29. Never attempt to deep fry in the oven.

DRAFT

SAVE THESE INSTRUCTIONS

ELECTRICAL INSTALLATION

For all cord connected appliances:

GROUNDING INSTRUCTIONS

This appliance must be grounded. In the event of an electrical short circuit, grounding reduces the risk of electric shock by providing an escape wire for the electric current. This appliance is equipped with a cord having a grounding wire with a grounding plug. The plug must be plugged into an outlet that is properly installed and grounded.

WARNING — Improper use of the grounding can result in the risk of electric shock.

Consult a qualified electrician or Serviceman if the grounding instructions are not completely understood or if doubt exists as to whether the appliance is properly grounded.

Do not use an extension cord. If the power supply cord is too short, have a qualified electrician or serviceman install an outlet near the appliance.

For a permanently connected appliance:

GROUNDING INSTRUCTIONS

This appliance must be connected to a grounded, metallic, permanent wiring system, or an equipment grounding conductor should be run with the circuit conductors and connected to the equipment grounding terminal or lead on the appliance.

In case of Radio or Television Interference

This equipment generates and uses radio frequency energy and if not installed and operated correctly, in strict accordance with the manufacturer's instructions, may cause harmful interference to authorized radio communication services.
It has been type tested and found to comply with the limits for Part 18.307 conducted emissions for non-consumer equipment and Part 18.305 radiated emissions, which are designed to provide reasonable protection against such interference. However, there is no guarantee that interference will not occur in a particular installation. If this equipment does cause interference to radio or television reception, which can be determined by turning the equipment off and on, the user is encouraged to try and correct the interference by one or more of the following measures:

1) Re-orientate the receiving antenna.
2) Relocate the microwave with respect to the receiver.
3) Plug the microwave into a different outlet so that the receiver and microwave are on different branch circuits.

If necessary the user should consult the dealer or an experienced radio/ television technician for additional suggestions.

Note: Modifications should only be carried out by the manufacturer or authorized representative to ensure continuing conformance.

DRAFT

PRECAUTIONS TO BE OBSERVED

1. Read this manual before using your oven.
2. As with all electrical appliances, it is wise to have the electrical connections inspected periodically.
3. The oven interior and door seals should be cleaned frequently, following the instructions described in the CLEANING section.
4. There is no need to switch off your oven after each function but remember to switch off at the end of the day or period of operation.
5. Microwave energy should not be used to dry linen or warm plates.
6. As with any cooking appliance, care should be taken to avoid combustion of the items within the oven.

If smoke is observed:

- Switch off
- Isolate from the electrical supply
- Keep the door closed to stifle any flames

7. Ensure food is placed in the centre of the oven cavity for best results.
8. When using the microwave only function, cover the food to prevent splashing the walls of the cavity.
9. Food in combustible plastic or paper containers should only be used in microwave only function and checked frequently to avoid the possibility of ignition.
10. Items should be **unwrapped** when using convection and combination functions.
11. Eggs and whole hard-boiled eggs should **not** be heated using the microwave or combination function as they may explode.
12. Food with a skin, e.g. potatoes, apples, sausages, etc. should be pierced before heating.
13. Food should not be heated in a completely sealed container as the build-up of steam may cause it to explode.
14. Excess fat should be removed during ‘roasting’ and before lifting heavy containers from the oven.
15. In the event of glass breaking or shattering within the oven, ensure that food is totally free of glass particles. If in doubt, dispose of any food that was in the oven at the time of the breakage.

DRAFT

INSTALLATION

Remove packing material and protective film from the oven.

Included inside your oven:

Check for obvious signs of transit damage.
If necessary, inform the freight company IMMEDIATELY.

Note:
The air intake is located under each side of the oven, even with the clearance specified below it is important that airflow is as cool as possible and not pre-heated by other appliances such as fryers, grills and griddles as this will deteriorate the life and performance of the oven.

LOCATION AND POSITIONING

Choose a site away from major heat sources.
DO NOT position so that hot air is drawn in from fryers, grills, griddles, etc.
A heat barrier to the height of the oven must be installed if sited next to a burner, stove or range.

WARNING:
Check that the AIR FILTERS are in place prior to operation
(see Main Features)

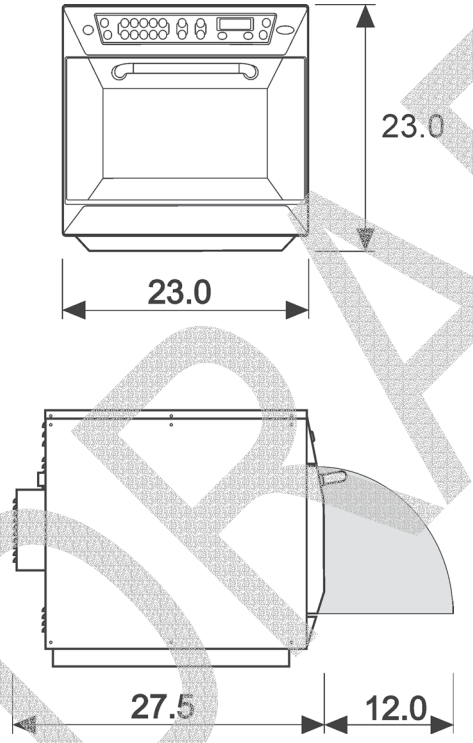

Place the oven on a flat surface that is LEVEL, STRONG and STABLE.
Allow a minimum clearance of 2 inches (50mm) to the rear, top and each side to allow air to circulate freely.
The air intake is located under each side of the oven, even with the clearance specified above, it is important that airflow is as cool as possible and not pre-heated by other appliances such as fryers, grills or griddles.
Allow a minimum of 2 inches (50mm) clearance above the oven for hot air to escape.
Allow sufficient clearance, 12 inches (305mm) in front of the oven for the door to open fully
Do not affix labels/stickers to oven other than those applied by the manufacturer

DRAFT

SUITABLE COOKING UTENSILS

Manufacturer's instructions should be checked to determine the suitability of individual containers or utensils using each of the cooking functions.
DO NOT place metal trays or containers on the BOTTOM of the oven as arcing may occur.

The following chart provides general guidelines:

	combination	convection only	
Heat resistant containers			
Toughened glass	✓	✓	Do not use items with metallic decoration.
Vitreous ceramics	✓	✓	
Earthenware (*porcelain, crockery, china etc.)*	✓	✓	
Metallic & Foil Trays			
Metallic trays (on oven runners) DO NOT USE ANY OTHER METAL OR FOIL CONTAINERS	✓	✓	Metallic trays may only be used when placed on the vitreous rack in the oven cavity (See note)
Plastic containers			
Rigid, boilable, plastic containers	✓	✓	Dual-ovenable plastic containers (up to certain temperatures) are now available. Check manufacturer's instructions before use
Disposables			
DO NOT USE			
Combustibles (paper, card, etc)	✗	✗	DO NOT USE disposable packaging or metal foil containers
Microwave-suitable cling film	✗	✗	
Other utensils			
Tie tags	✗	✗	No kitchen utensil should be left in food while it is cooking
Cutlery	✗	✗	
Temperature probes	✗	✗	

IMPORTANT
The oven will accomodate ¼ size bun/sheet pans. Metal sheet pans may be used when placed on the special vitreous enamel shelf rails ONLY, either in 'Convection only' mode or 'Microwave/Convection' mode.

DRAFT

This oven offers operators the flexibility of combination cooking with additional control over fan speed and microwave power.

Combination cooking enables high quality results to be achieved in a fraction of the time taken by conventional cooking, particularly when baking, browning, roasting, grilling or producing gratinee dishes.

Once established, precise instructions for combination or convection cooking of selected items may be programmed into the ovens memory so that they can be repeated easily and accurately. Up to 100 programs can be stored and simply recalled by pressing a two digit number (00- 99).

Multi-Stage Programming

The oven controls offer even greater flexibility by allowing multi-stage programming. This enables the exact conditions required for quality results to be set according to the food type. Programs can have up to 4 stages each with its own time, fan speed and microwave power settings.

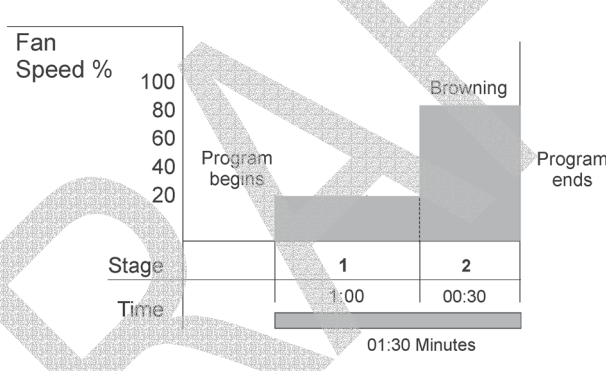

A simple 2-stage program is shown:
With the oven set to pre-heat at 500°F.

Stage 1 The cooking stage begins by applying a gentle fan speed of 20% for 1 minute.

Stage 2 The fan speed is increased to 80% for 30seconds to brown the food.

This is only one example of an infinite number of possible multi-stage programs that can be created and stored.

DRAFT

The instructions outlined in this guide are intended to ensure the safety and long life of your Merrychef oven.

MAIN FEATURES

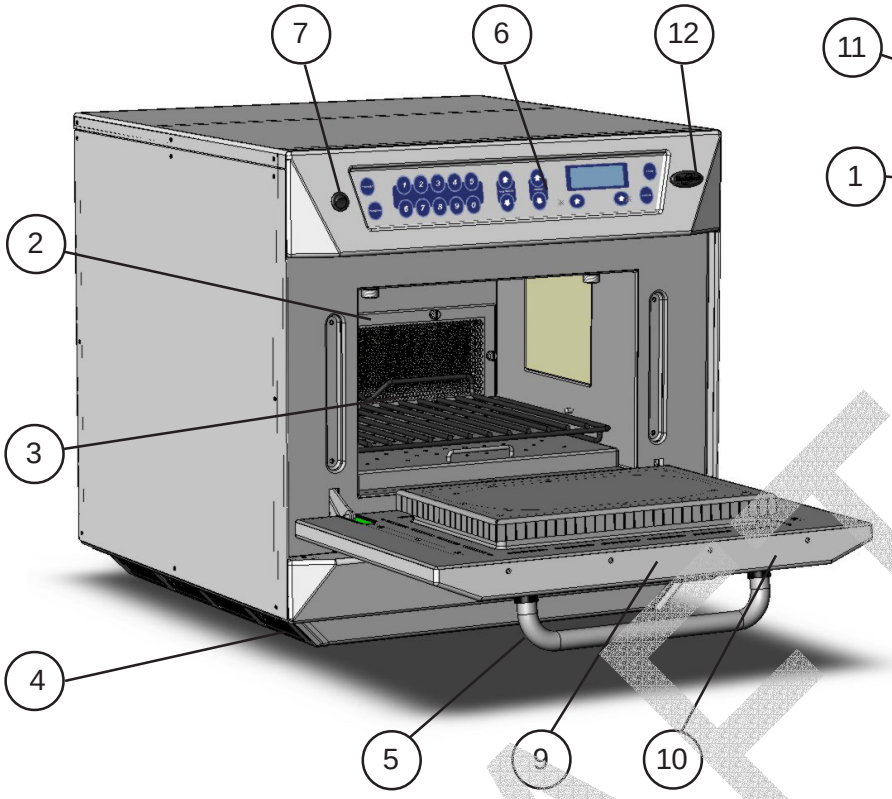

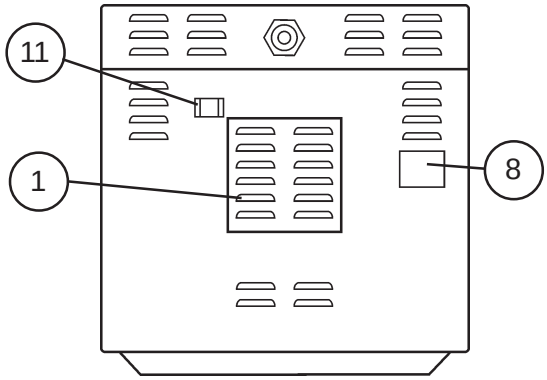

Rear view

1 **AIR OUTLETS**
These vents on the rear panels enable air which has been used to cool internal components to escape. It will not allow microwave energy to escape into the environment. They must be kept free from obstruction.

2 **OVEN CAVITY**
The cavity is constructed from stainless steel and vitreous enamelled panels. It must be kept clean (see CLEANING).

3 **CONVECTION FAN and GREASE FILTER**
The fan draws air over the heating elements and into the cavity over the edges of the rear grease filter, producing perfect heat distribution for combination cooking. The metal grease filtergrill covering the fan must be kept clean and free of debris (See CLEANING)

4 **AIR INLET FILTERS (LEFT & RIGHT)**
Situated at the left and right hand side of the base at the front. These are part of the ventilation system and must be kept free of obstruction and cleaned on a daily basis.

5 **DOOR HANDLE**
This is a rigid bar which is pulled downwards and towards you to open.

6 **CONTROL PANEL**
See page 10.

7 **ON/OFF SWITCH**
When switched ON, the control panel will illuminate. The fan and ventilation system will also operate.

8 **RATING PLATE**
Found on the rear panel, this states the serial number, model type & electrical specifications.

9 **DOOR**
This is a precision-made energy barrier with three microwave safety interlocks. It must be kept clean (see CLEANING section). The door should NOT be used to support heavy dishes.

10 **DOOR SEALS**
These ensure a tight seal around the door. They should be kept clean and checked regularly for signs of damage. At the first sign of wear they should be replaced by a Merrychef approved Service Agent.

11 **STEAM VENT** (on rear of oven)
This enables steam to escape and prevents build up of condensation. It will not allow microwave energy to escape.

12 **MenuKey 2**
Changes the programs on the oven.

DRAFT

CONTROL PANEL

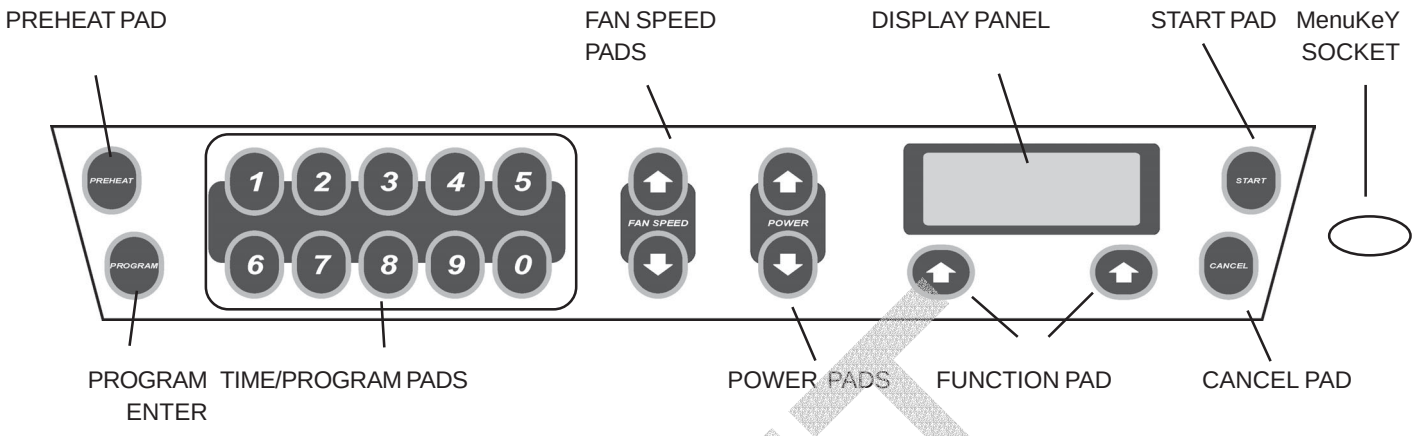

DRAFT

POWER PADS
The microwave power can be increased or decreased adjusted in 10% steps. (0% to 100%)
The default setting is 50% microwave power.

FAN SPEED PADS
The Fan speed can be increased and decreased in 5% steps (10% to 100%)

TIME/ PROGRAM PADS
These pads are used for setting the cooking time in 1 second steps to a maximum of 30 minutes.
They are also used for storing and recalling programs from 00-99

MenuKey
The MenuKey System automatically changes all the cooking programs with an electronic key and allows program names to be identified

CANCEL PAD
Cancels all timed cooking cycles, pre-programmed operations and stops the microwave energy. It does not alter the oven temperature. If the oven is hot, food will continue to cook and should be removed from the oven immediately. This pad will also cancel any incorrect operations. It will not erase programs.

PROGRAM
Activates program mode for storing programs in memory

MAIN DISPLAY PANEL
Shows the principal functions of the oven.
When cooking, the time remaining counts down.
Also displays error messages and oven temperature. (See PROBLEM SOLVING)
When storing and recalling a program the display indicates the program number and details

ERROR DISPLAY
See PROBLEM SOLVING.

USING THE OVEN FOR THE FIRST TIME

The MAI oven has a constant operating temperature for cooking.
When the PREHEAT pad is pressed the oven heats up to this temperature before cooking can commence, this set initially at 480°F.

To change the PREHEAT temperature within range 212°F to 525°F:

1 Switch oven OFF

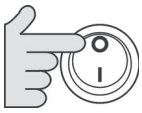

2 Press and hold PREHEAT pad and switch the oven on
The oven serial no. information will appear, continue to hold the PREHEAT button until *enter preheat temp* is shown in the display.
The current oven Preheat temperature is displayed.

Serial No.
Model No.
Software
MK serial No.

ENTER PREHEAT TEMP
480°F
SAVE

3 To enter a new Preheat temperature press the number pads to overwrite the existing setting.
Press the SAVE function key to save the new setting.

for example enter 3,8,0 for 380°F

SAVE

ENTER PREHEAT TEMP
380°F
SAVE

4 The oven returns to standby mode.

OVEN COLD
PRESS PREHEAT

DRAFT

Start up sequence and oven specification

When the oven is switched on the Merrychef logo is displayed followed by information about the oven:

Serial No.
Model No.
Software
MenuKey serial No.

Serial No.
Model No.
Software
MK serial No.

The oven then displays the cold standby screen.

OVEN OFF
PRESS PREHEAT

OPERATING INSTRUCTIONS: MANUAL MODE

The oven can be operated in manual or programmed mode. It is important to understand manual mode prior to attempting program operation.

WARNING:

DO NOT APPLY MICROWAVE ENERGY WHEN OVEN IS EMPTY

DO NOT USE THE OVEN WITHOUT

CLEAN AIR FILTERS IN POSITION

To familiarize yourself with the controls place a heatproof bowl containing approximately 2.5 pints of water in the oven.

1 Switch the oven on
The Merrychef Logo and Oven data display briefly followed by OVEN OFF standby.

OVEN OFF
PRESS PREHEAT

2 Press PREHEAT PAD to heat the oven up to its pre-set temperature this will take approximately 20 minutes.
The display will show the current oven cavity temperature.
The display will show READY TO COOK when cooking temperature is reached.

READY
TO COOK AT 480°F
MANUAL RUN PROG

3 To enter cook menu press manual function pad

00.00
FAN: 50%
POWER: 50%

To enter the cooking TIME

Enter a time using the number pads
e.g. 2 minutes 35 seconds

02.35
FAN: 50%
POWER: 50%

To change FAN SPEED

Increase or decrease the fan speed
(in 5% steps) using the up/down arrows

e.g press down arrow 3 times, 35%

02.35
FAN: 35%
POWER: 50%

To change MICROWAVE POWER

Increase or decrease Microwave power
(in 10% steps) using the up/down arrows

e.g. press up arrow twice, 70%

02.35
FAN: 35%
POWER: 70%

4 Taking all the necessary precautions to ensure you do not burn yourself, place the food into the hot oven cavity and close the door.

Press Start Pad to begin cooking
Always keep the period that the door is open to a minimum.

5 The timer will now count down.
When the remaining time reaches zero an audible signal will be given.
Open the door and remove the food from the cavity.

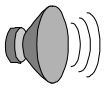

COOKING
COMPLETE

DRAFT

AUDIBLE WARNING

At the end of every timed cycle an audible warning will sound.

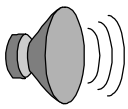

The audible warning stops when the door is opened.

On closing the door after interrupting the cycle the audible warning sounds as a reminder to press START (see PAUSE FACILITY).

The audible warning can be stopped by touching the cancel pad but it is important to remember that food in the oven will continue to brown until removed.

PAUSE FACILITY

A cooking cycle may be interrupted by opening the door. This facility is useful when stirring, repositioning or if temperature readings are required during a heating cycle

On opening the door the timer will be held at this point and the display shows door open.

TO CONTINUE
To continue the cycle or program close the door an audible warning sounds as a reminder to press the START PAD to restart the timer.

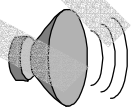

Hints and Tips for improved operation

- Care should be taken when defrosting in a hot oven.
  For best results, defrost first thing in the morning when the oven is still cold.
- Combination and convection only cooking may be carried out on a rising temperature but extra attention must be given to timings.
- Convection only cooking can be carried out without setting a time.
- Microwave heating may be introduced part-way through a manually set convection only cycle.
  However, we strongly recommend that only the most experienced microwave operator uses this facility as the microwave energy will then be on a time set for convection cooking.

Cooking may be interrupted by opening the door. Close the door and touch the start button to continue.

DRAFT

PROGRAMMING NUMBER PADS 1

Pre-programming allows repetitive cooking procedures to be stored for ease of use.
Each program can comprise up to four stages, allowing at each, independent control of Stage time, Microwave power level and Fan speed. However, programs must be used with caution, since if the food to cook varies in weight or density, adequately cooked food may not be achieved. Therefore, it is vital that all food prepared for service should be checked to ensure that core temperatures have been achieved.

Some experimentation will be required to determine the correct program for a particular product.

From a hot oven in standby

READY
TO COOK AT 480°F
MANUAL RUN PROG

From a cold oven in standby

OVEN OFF
PRESS PREHEAT

1 Press the PROGRAM PAD
the display shows program mode.

PROGRAM NUMBER _ _

2 Enter a two digit number for the program from 00 to 99 using the NUMBER PADS.

e.g. 32

PROGRAM NUMBER 32
NO PROGRAM AVAILABLE
BACK NEXT

The display shows that no program is currently stored
Press NEXT to move to the next stage.

3 Enter the cooking temperature by pressing the NUMBER PADS.

e.g. 380°F

ENTER PREHEAT TEMP
380°F
BACK NEXT

If a program is already in the memory the temperature for this program will be displayed.

Press next to move to the next stage

4 Enter the cooking information for STAGE 1 of the program:

If a program is already in the memory the cook data for this program will be displayed

To enter TIME

Enter a time using the number pads
e.g. 2 minutes 35 seconds

STAGE 1
TIME FAN POWER
00.00 50% 50%
BACK NEXT

To change FAN SPEED

Increase or decrease the fan speed
(in 5% steps) using the up/down arrows

e.g press down arrow 3 times, 35%

STAGE 1
TIME FAN POWER
02.35 35% 70%
BACK NEXT

To change MICROWAVE POWER

Increase or decrease Microwave power
(in 10% steps) using the up/down arrows
e.g. press up arrow twice, 70%

DRAFT

PROGRAMMING NUMBER PADS 2

Press NEXT to move to the next stage.

5 Repeat step 4 for Program Stage 2, stage 3 and stage 4 as required.
To skip a stage press NEXT.

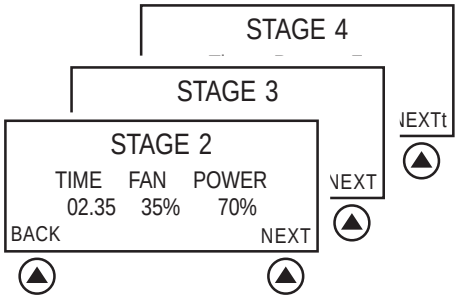

6 On completing stage 4, to review the program stages press the BACK function button.

Press the NEXT function key.

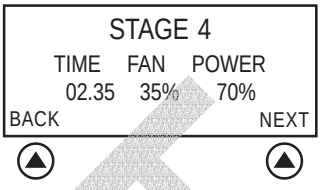

7 Enter a Program Name (Optional)

The Program name may be up to a maximum of 20 characters in total including spacesl.

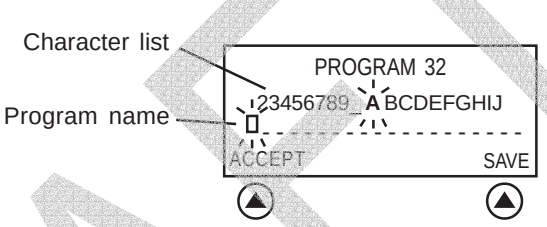

SELECTING A CHARACTER

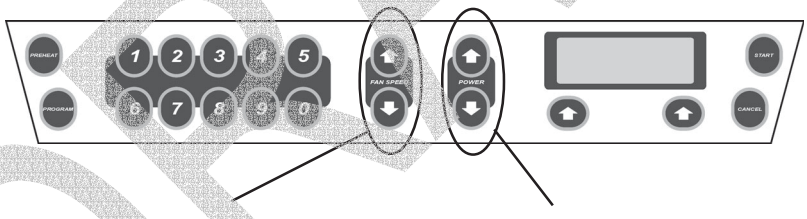

To scroll left through the character list use FAN SPEED UP ARROW

To scroll right through the character list use POWER UP ARROW

:01234567 8 9_ ABCDEFG

GHIJKLMNO P QRSTUVWXY

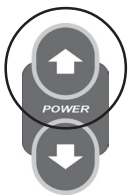

To select the flashing character from the list
press the ACCEPT function pad

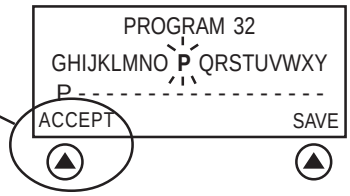

DRAFT

TO EDIT THE PROGRAM NAME

Use the POWER DOWN ARROW to move one space forward in the program name.

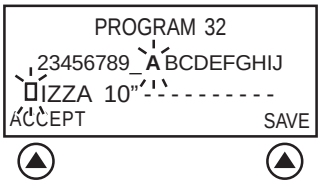

Use the UP ARROWS to select a new character from the list .

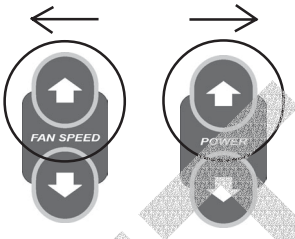

To delete a character select space from the list using the UP ARROWS.

-- 7689ABCD --
space

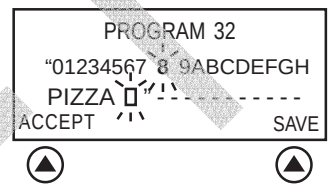

Select the new character by pressing the ACCEPT function pad

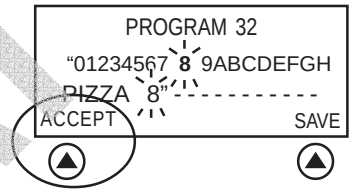

To backspace use the FAN SPEED DOWN ARROW

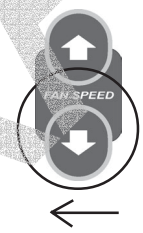

example: Program 32, PIZZA 8”

When the name is correct press the SAVE function key.

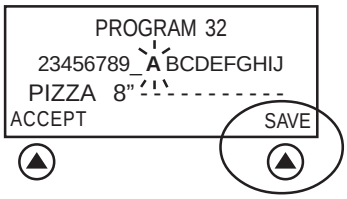

8 To save the program to memory press the SAVE function button.

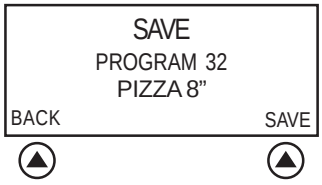

The display confirms that the program has been saved.

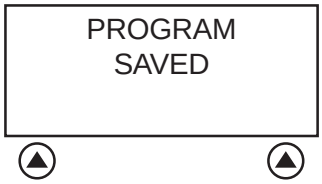

DRAFT

RUNNING A PROGRAM

Using number pad keys to run a program

Programs 00 to 99 can be recalled using the number pad keys.
The following procedure should be used to activate these programs.

1 Switch the oven on

OVEN COLD
Press Preheat

2 Press Preheat Pad to heat the oven up to its pre-set temperature this will take approximately 20 minutes.
The dispaly will show the current oven cavity temperature
The display will show READY TO COOK when cooking temperature is reached

READY
TO COOK AT 480°F
MANUAL RUN PROG

3 To enter cook menu press memory Hot key

RUN PROG

RUN PROGRAM___

Press the number pad key you wish to activate (00-99)
The program number and total cooking time appear on the display.

example: Program 08

RUN PROGRAM 08

4 Taking all the necessary precautions to ensure you do not burn yourself, place the food into the hot oven cavity and close the door.

Press Start Pad to begin cooking
Always keep the period that the door is open to a minimum.

02.35
PROGRAM NAME

The program will now operate with the total remaining time displayed counting down on the display
(all stage time added together).
When the time reaches “00:00” the display shows cooking completed and audible signal will be given.
Remove the food from the oven and close the door.

example: 2minutes 35seconds

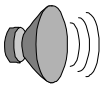

COOKING
COMPLETED

Note:
When the cycle is interrupted or stopped the oven will remain at the pre-set temperature and the food inside the oven will continue to cook

Programs can be halted and cancelled at any time by pressing the CANCEL key.

DRAFT

MenuKey : CHANGING OVEN MENU PROGRAMS

The MenuKey System automatically changes all the cooking programs with the turn of a key.

To change the menus on the oven:

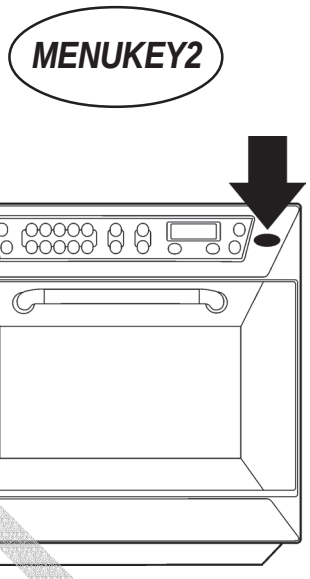

1 Ensure the power switch is **off**.

2 Lift the MenuKey cover in the top front panel of the oven and put the key in the slot.

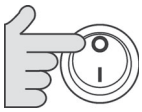

3 With the key still in place switch the power switch **on**.
The oven will now go through the program download sequence by displaying the following:

The MenuKey Code.

example:
Key 02

The number of programs and each program number on the key.

example:
27 programs

The programs then count down to 00.

When the display shows 00:00, remove the MenuKey and close the cover. The oven is now ready to use with the new programs.

Ensure that the MenuKey is removed once the oven has been programed.

To confirm the download is successful
Switch off the oven.
Switch on and the display briefly will show the following:

1. Serial No., Model no. Software & MenuKey serial No.
2. The standby display

Serial No.
Model No.
Software
MK serial No.
hold

OVEN COLD
PRESS PREHEAT

DRAFT

CLEANING: 1

For the oven to operate at peak efficiency, the cavity, door and air filters must be kept clean.

A daily cleaning routine will ensure that you comply with the required hygiene standards and will help to maintain and prolong the efficiency of your oven.

Follow the SAFETY INSTRUCTIONS at the beginning of this manual.

Hot surface Hazard

- **ALWAYS switch off at the electrical supply and allow oven to cool for at least 20 minutes before cleaning**
- **Allow the oven and accessories to cool before commencing cleaning**
- **As required wipe out spillages with disposable paper wipes**
- **NEVER use steel wool, knives or harsh abrasives on any part of the oven**

Faults arising from neglect or misuse including use without clean filters in place are not covered by the guarantee. Service visits as a result of such faults will be chargeable.

As with all electrical appliances, it is wise to have the electrical connections inspected periodically.

Cleaning the air filters

1. Remove the air filters from each side of the oven by sliding the filter out from the front.
2. Wash in clean, warm soapy water, rinse and pat dry. Slide back into position through slots.

DO NOT USE THE OVEN WITHOUT CLEAN AIR FILTERS IN POSITION

Cleaning the control panel and exterior surfaces

Wipe down regularly with a damp cloth.

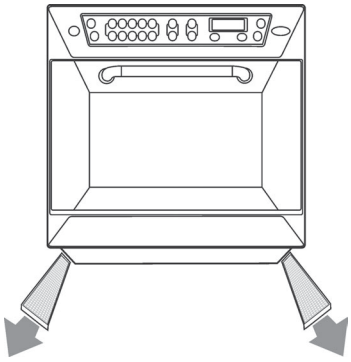

DO NOT USE THE OVEN WITHOUT CLEAN AIR FILTERS IN POSITION

DRAFT

CLEANING: 2

- **ALWAYS switch off at the electrical supply and allow oven to cool for at least 20 minutes before cleaning**
- **CAUTION: Allow the oven and accessories to cool before commencing cleaning**
- **CAUTION: Wear protective rubber gloves when cleaning the oven**

Hot surface hazard

Cleaning the oven cavity and door

1. Remove the oven rack and lift out the bottom impinger plate from between the retaining pins on each side. To remove the top impinger plate undo the two thumb screws and ease the plate forwards and down.
   To remove the grease filter at the back of the cavity undo the six thumb screws and lift out
   Wash in warm soapy water. Wash off using a clean cloth and plenty of clean, warm water.
   Dry using a fresh, clean cloth.

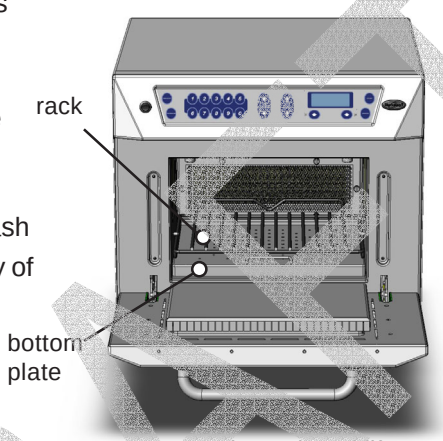

Remove the rack and lift out bottom impinger plate

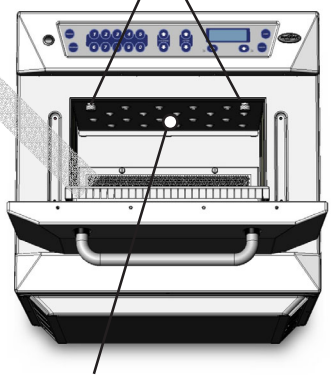

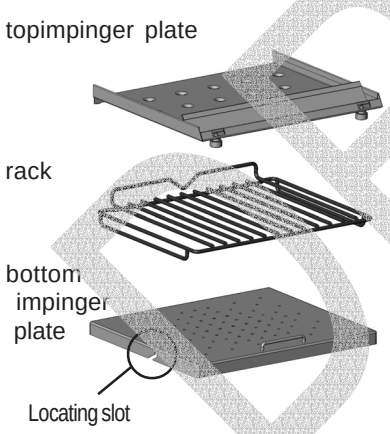

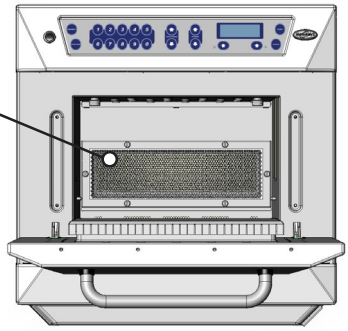

DO NOT SPRAY OVEN CLEANER INTO THE BACK OF THE CAVITY

2. **Apply non-caustic** oven cleaner to interior surfaces except door seals. Leave for the recommended time. Wash off using a clean cloth and plenty of clean, warm water. Dry using a fresh, clean cloth.
   Wipe hinges with a clean, damp cloth.
   DO NOT apply lubricating oil.

Merrychef recommends the use of approved Merrychef Oven Cleaner and Merrychef Oven Protector.

3. Wipe door seals carefully with a clean damp cloth.
   Examine for signs of wear or damage.

If the door seals are damaged, the oven must be repaired by an approved Servicer.

DRAFT

TECHNICAL SPECIFICATIONS

Merrychef MAI	Height (inches)	Width (inches)	Depth (inches)	Wt. (lb.s)	Microwave Power output (watts)	Convection Power output (watts)
External Dimensions	23.0	23.0	27.5	187	1500	3250

Power supply (See Product Rating Label)

DRAFT

Approved Service Agent