This unit consists of 4 sub-units **(See Fig-1)**:

1. RF Remote Control Unit
2. Hard Wired Remote Control Unit
3. Master Control Unit
4. Transceiver

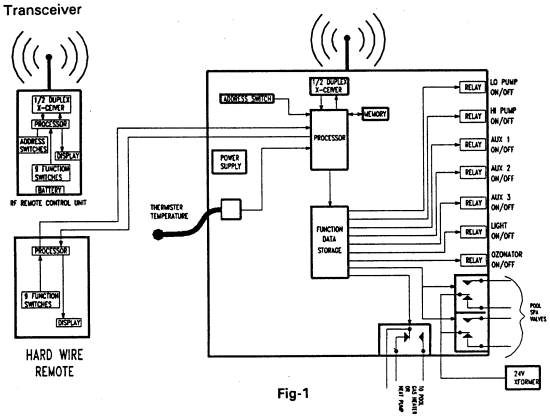

Fig-1

04/04/00