CERTIFICATE #3478.01

TEST REPORT

EUT Description	**Wireless Module installed in Tablet**
Brand Name	**Intel® Tri-Band Wireless-AC 18265**
Model Name	**18265NGW**
Serial Number	**WLAN MAC:34.13.E8.5B.20.18** **BT MAC:34.13.E8.5B.20.1C** (see section 4)
FCC/IC ID	**FCC ID: PD918265NG & PD918265NGU** **IC ID: 1000M-18265NG**
Antenna type	**Antenna: PIFA, Ethertronics Inc.** **Main: 5002680** **Aux: 5002680**
Hardware/Software Version	**DRTU version: 1.9.1-04155** **Driver version: 19.20.0.6**
Date of Sample Receipt	**2017-01-23**
Date of Test Start/End	**2017-02-08/2017-03-08**
Features	**802.11a/b/g/n/ac Wireless LAN + Bluetooth v4.2 + WiGig** (see section 7)
Description	**Wireless Module: Intel® 18265NGW** **Platform: T17G**

Applicant	**Intel Mobile Communications**
Address	**100 Center Point Circle, Suite 200 / Columbia, SC 29210 / United States**
Contact Person	**Steven Hackett**
Telephone/Fax/Email	**steven.c.hackett@intel.com**

Reference Standards	**FCC 47 CFR Part §2.1093** **RSS-102, Issue 5** (see section 1)	
RF Exposure Environment	**Portable devices - General population/uncontrolled exposure**	
	SAR Result	SAR Limit
Maximum SAR Result & Limit	**1.51 W/kg (1g)**	**1.6 W/kg (1g)**
Min. test separation distance	**3.00mm**	

Test Report number	**170108-01.TR01**
Revision Control	**Rev. 00** **This test report revision replaces any previous test report version** (see section 6)

The test results relate only to the samples tested.
The test report shall not be reproduced in full, without written approval of the laboratory.

Issued by	Reviewed by
Digitally signed by Rafael QUIROZ MORENO Date: 2017.03.20 18:27:54 +01'00' Adobe Acrobat DC version: 2015.006.30280	Digitally signed by Jose M. FORTES DN: cn=Jose M. FORTES, o=Intel Mobile Communications, ou=WRF Lab, email=jose.m.fortes.lopez@intel.com, c=FR Date: 2017.03.20 18:48:46 +01'00'
Rafael QUIROZ (Test Lead)	Jose M. FORTES (Technical Officer)

Intel Mobile Communications France S.A.S – WRF Lab
425 rue de Goa – Le Cargo B6 – 06600, Antibes, France
Tel. +33493001400 / Fax +33493001401

Table of Contents

1. Standards, reference documents and applicable test methods ... 3
2. General conditions, competences and guarantees ... 3
3. Environmental Conditions ... 4
4. Test samples ... 4
5. Remarks and comments ... 4
6. Document Revision History ... 4
7. Equipment Under Test ... 5
8. Test Verdicts summary ... 7
Annex A. Test & System Description ... 8
A.1 SAR Definition ... 8
A.2 SPEAG SAR Measurement System ... 9
A.2.1 SAR Measurement Setup ... 9
A.2.2 E-Field Measurement Probe ... 10
A.2.3 SAM Phantom ... 10
A.2.4 Flat Phantom ... 11
A.2.5 Device Positioner ... 11
A.3 Data Evaluation ... 12
A.4 System and Liquid Check ... 14
A.4.1 System Check ... 14
A.4.2 Liquid Check ... 15
A.5 Test Equipment List ... 16
A.6 Measurement Uncertainty Evaluation ... 17
A.7 RF Exposure Limits ... 19
Annex B. Test Results ... 20
B.1 Test Conditions ... 20
B.1.1 SAR Test positions relative to the phantom ... 20
B.1.2 Test signal, Output power and Test Frequencies ... 20
B.1.3 Evaluation Exclusion and Test Reductions ... 21
B.2 Conducted Power Measurements ... 23
B.2.1 WLAN 2.4GHz (DTS) ... 23
B.2.2 WLAN 5GHz (U-NII) ... 24
B.2.3 Bluetooth ... 27
B.3 Tissue Parameters Measurement ... 28
B.4 System Check Measurements ... 28
B.5 SAR Test Results ... 29
B.5.1 802.11b/g/n – 2.4GHz - DTS ... 29
B.5.2 802.11a/n/ac – 5.3 GHz – U-NII-2A ... 29
B.5.3 802.11a/n/ac – 5.6 GHz – U-NII-2C ... 29
B.5.4 802.11a/n/ac – 5.8 GHz – U-NII-3 ... 30
B.5.5 Bluetooth – 2.4GHz - DSSS ... 30
B.6 SAR Measurement Variability ... 31
B.7 Simultaneous Transmission SAR Evaluation ... 32
Annex C. Test System Plots ... 34
Annex D. TSL Dielectric Parameters ... 52
Annex E. Calibration Certificates ... 56
Annex F. Photographs ... 58

Printed copies are not controlled documents

1. Standards, reference documents and applicable test methods

1. FCC 47 CFR Part §2.1093 – Radiofrequency radiation exposure evaluation: portable devices.
2. FCC OET KDB 248827 D01 – SAR guidance for IEEE 802.11 (Wi-Fi) transmitters.
3. FCC OET KDB 447498 D01 – Mobile and Portable Devices RF Exposure Procedures and Equipment Authorization Policies.
4. FCC OET KDB 616217 D04 – SAR Evaluation Considerations for Laptop, Notebook, Netbook and Tablet Computers.
5. FCC OET KDB 865664 D01 – SAR Measurement Requirements for 100 MHz to 6 GHz.
6. FCC OET KDB 865664 D02 – RF Exposure Compliance Reporting and Documentation Considerations.
7. IC RSS 102, Issue 5 – Radio Frequency (RF) Exposure Compliance of Radiocommunication Apparatus (All Frequency Bands).
8. IC Notice 2012-DRS0529 – SAR correction for measured conductivity and relative permittivity based on IEC 62209-2 standard.
9. IC Notice 2012-DRS1203 – Applicability of latest FCC RF Exposure KDB procedures (publication date October 24, 2012) and other procedures.
10. IC Notice 2013-DRS0911 – Latest publication of IEEE 1528-2013 and power exemption limits.
11. IEEE Std 1528-2013 – IEEE Recommended Practice Determining the Peak Spatial-Average Specific Absorption Rate (SAR) in the Human Head from Wireless Communication Devices: Measurement Techniques.

2. General conditions, competences and guarantees

- ✓ Intel Mobile Communications Wireless RF Lab (Intel WRF Lab) is a testing laboratory accredited by the American Association for Laboratory Accreditation (A2LA).
- ✓ Intel Mobile Communications Wireless RF Lab (Intel WRF Lab) is an Accredited Test Firm listed by the FCC, with Designation Number FR0011.
- ✓ Intel Mobile Communications Wireless RF Lab (Intel WRF Lab) is a Registered Test Site listed by IC, with IC Assigned Code 1000Y.
- ✓ Intel WRF Lab only provides testing services and is committed to providing reliable, unbiased test results and interpretations.
- ✓ Intel WRF Lab is liable to the client for the maintenance of the confidentiality of all information related to the item under test and the results of the test.
- ✓ Intel WRF Lab has developed calibration and proficiency programs for its measurement equipment to ensure correlated and reliable results to its customers.
- ✓ This report is only referred to the item that has undergone the test.
- ✓ This report does not imply an approval of the product by the Certification Bodies or competent Authorities.
- ✓ Complete or partial reproduction of the report cannot be made without written permission of Intel WRF Lab.

Printed copies are not controlled documents

3. Environmental Conditions

✓ All tests were performed in a laboratory with an environment which avoids influence on SAR measurements by ambient EM sources and any reflection from the environment itself, and the following limits were not exceeded during the tests:

Temperature	22ºC ± 2ºC
Humidity	40% ± 10%
Liquid Temperature	22ºC ± 2ºC

4. Test samples

Sample	Test Item #	Description	Model	Serial #	Date of reception
#01	170108-01.S01	Wireless Module installed in Tablet	18265NGW + T17G	WLAN MAC: 34.13.E8.5B.20.18 BT MAC: 34.13.E8.5B.20.1C	2017-01-23

✓ Sample #01 has undergone all the test(s) requested by the applicant, following the standards specified in section 1.

5. Remarks and comments

1. Only the plots for the test positions with the highest measured SAR per band/mode are included in *Annex C. Test System Plots*, as required per FCC OET KDB 865664 D02, paragraph 2.3.8.

6. Document Revision History

Revision #	Date	Modified by	Details
Rev. 00	2017-03-15	R. Quiroz	First Issue

Printed copies are not controlled documents

7. Equipment Under Test

Brand Name	Intel® Tri-Band Wireless-AC 18265
Model Name	18265NGW
FCC/IC ID	FCC ID: PD918265NG & PD918265NGU IC ID: 1000M-18265NG
Software Version	1.9.0-04155
Driver Version	19.20.0.6
Prototype / Production	Production
Host Identification	T17G
Exposure Conditions	Body worn
Supported Radios	802.11a/b/g/n/ac BDR/EDR v2.1 - Bluetooth LE v4.2 WiGig
Antenna Information	**Main WLAN:** PIFA antenna. WiFi 2.4GHz & 5GHz **Aux WLAN:** PIFA antenna. WiFi 2.4GHz & 5GHz and BT. See *Annex F. Photographs* for more details on antennas location.
Simultaneous Transmission Configurations	WLAN 2.4GHz Main + BT Aux WLAN 2.4GHz Main + WLAN 2.4GHz Aux WLAN 5GHz Main + BT Aux WLAN 5GHz Main + WLAN 5GHz Aux WLAN 5GHz Main + WLAN 5GHz + BT Aux
Additional Information	No WWAN transmitter is considered in this report
	5.60-5.65 GHz band (TDWR) is supported by the device
	Band gap is supported by the device

Supported Radios

Mode	Duty Cycle	Modulation	Band	UL Freq Range (MHz)	Max. Measured Conducted Power (dBm)
802.11b/g/n	100%	BPSK QPSK 16QAM 64QAM	2.4GHz	2400-2483.5	15.00
802.11a/n/ac	100%	BPSK QPSK 16QAM 64QAM 256QAM	5.2GHz	5150-5150	NM
			5.3GHz	5250-5350	12.50
			5.6GHz	5475-5725	13.50
			5.8GHz	5725-5850	13.50
BDR/EDR v2.1	77%	GFSK π/4 DQPSK 8DPSK	2.4GHz	2400-2483.5	11.50
Bluetooth LE v4.2	62%	GFSK	2.4GHz	2400-2483.5	8.50

NM: Not measured

Printed copies are not controlled documents

Maximum Output power specification + Tune up tolerance limit			SISO mode		MIMO mode	
Equipment Class	Mode	BW [MHz]	Main [dBm]	Aux [dBm]	Main [dBm]	Aux [dBm]
DTS	802.11b	20	13.00	15.00		
	802.11g	20	12.50	14.50		
	802.11n20	20	12.50	14.50	12.50	12.50
	802.11n40	40	12.50	14.50	12.50	12.50
U-NII-1	802.11a	20	12.00	12.50		
	802.11n20	20	11.50	12.00	11.50	11.50
	802.11n40	40	11.50	12.00	11.50	11.50
	802.11ac80	80	11.50	12.00	11.50	11.50
U-NII-2A	802.11a	20	12.00	12.50		
	802.11n20	20	11.50	12.00	11.50	11.50
	802.11n40	40	11.50	12.00	11.50	11.50
	802.11ac80	80	11.50	12.00	11.50	11.50
U-NII-2C	802.11a	20	11.50	13.50		
	802.11n20	20	11.00	13.00	11.00	11.00
	802.11n40	40	11.00	13.00	11.00	11.00
	802.11ac80	80	11.00	13.00	11.00	11.00
U-NII-3	802.11a	20	11.50	13.50		
	802.11n20	20	11.00	13.00	11.00	11.00
	802.11n40	40	11.00	13.00	11.00	11.00
	802.11ac80	80	11.00	13.00	11.00	11.00
BT	Bluetooth v4.2 BDR	20		11.50		
	Bluetooth v4.2 EDR2	20		11.50		
	Bluetooth v4.2 EDR3	20		11.50		
	BLE	-		8.50		

The conducted values are obtained by applying the BIOS SAR power values to the 18265NGW Intel module installed in the T17G Model identified in this report, as requested by the customer.

Printed copies are not controlled documents

8. Test Verdicts summary

Mode	Band	Highest Reported SAR (1g) (W/kg)	Verdict
802.11b/g/n	2.4GHz	0.83	P
802.11a/n/ac	5.2GHz	NM	NA
	5.3GHz	1.14	P
	5.6GHz	1.38	P
	5.8GHz	1.51	P
Bluetooth	2.4GHz	0.15	P

P: Pass
F: Fail
NM: Not Measured
NA: Not Applicable

According to the FCC OET KDB 690783 D01, this is the summary of the values for the Grant Listing:

Highest Reported SAR (1g) (W/kg)			
Exposure Condition	Equipment Class		
	DTS	DSSS	U-NII
Body Worn	0.83	0.15	1.51
Simultaneous Tx	Sum-SAR: 1.40	Sum-SAR: 2.20 SPLSR: 0.04	Sum-SAR: 2.20 SPLSR: 0.04

Considering the results of the performed test according to FCC 47CFR Part 2.1093 and IC RSS 102, Issue 5 the item under test is IN COMPLIANCE with the requested specifications specified in section *1. Standards, reference documents and applicable test methods.*

Printed copies are not controlled documents

Annex A. Test & System Description

A.1 SAR Definition

Specific Absorption rate is defined as the time derivative of the incremental energy (dW) absorbed by (dissipated in) and incremental mass (dm) contained in a volume element (dV) of a given density (ρ).

$$SAR = \frac{d}{dt} \cdot \left(\frac{dW}{dm}\right) = \frac{d}{dt} \cdot \left(\frac{dW}{\rho \cdot dV}\right)$$

SAR is expressed in units of watts per kilogram (W/kg). SAR can be related to the electric field at a point by

$$SAR = \frac{\sigma |E|^2}{\rho}$$

Where:

σ = Conductivity of the tissue (S/m)
ρ = Mass density of the tissue (kg/m3)
E = RMS electric field strength (V/m)

Printed copies are not controlled documents

A.2 SPEAG SAR Measurement System

A.2.1 SAR Measurement Setup

The DASY5 system for performing compliance tests consists of the following items:

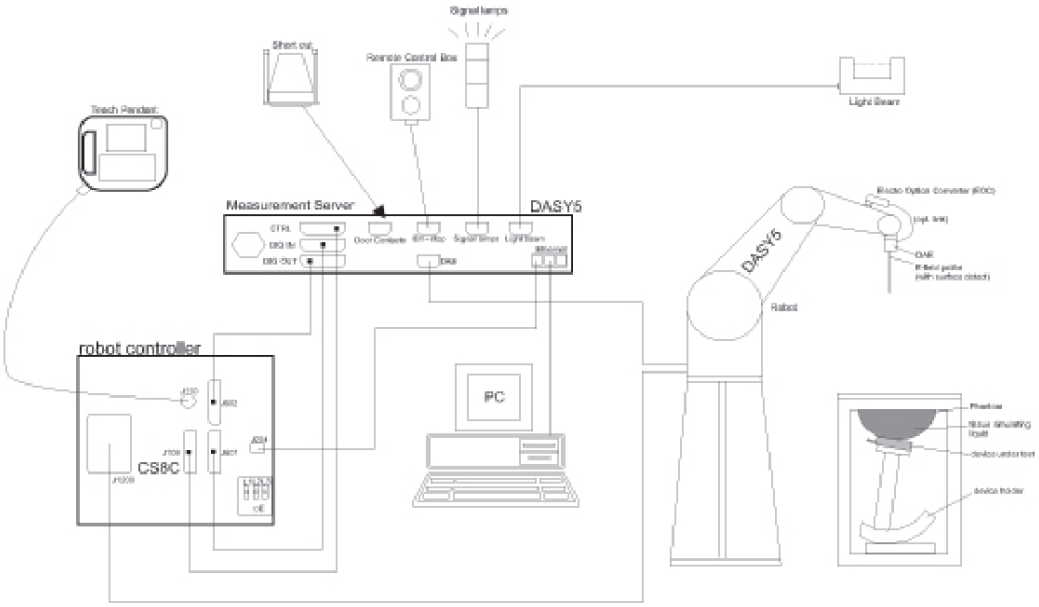

- ✓ A standard high precision 6-axis robot (Staübli TX/RX family) with controller, teach pendant and software. It includes an arm extension for accommodating the data acquisition electronics (DAE)
- ✓ An isotropic field probe optimized and calibrated for the targeted measurements.
- ✓ A data acquisition electronics (DAE) which performs the signal amplification, signal multiplexing, AD-conversion, offset measurements, mechanical surface detection, collision detection, etc. The unit is battery powered with standard or rechargeable batteries. The signal is optically transmitted to the EOC.
- ✓ The Electro-optical Converter (EOC) performs the conversion from optical to electrical signals for the digital communication to the DAE. The EOC signal is transmitted to the measurement server.
- ✓ The function of the measurement server is to perform the time critical tasks such as signal filtering, control of the robot operation and fast movements interrupts.
- ✓ The Light Beam used is for probe alignment. This improves the (absolute) accuracy of the probe positioning.
- ✓ A computer running Win7 professional operating system and the DASY5 software.
- ✓ Remote control and teach pendant as well as additional circuitry for robot safety such as warning lamps, etc.
- ✓ The phantom, the device holder and other accessories according to the targeted measurement.
- ✓ Tissue simulating liquid.
- ✓ System Validation dipoles.
- ✓ Network emulator or RF test tool

Printed copies are not controlled documents

A.2.2 E-Field Measurement Probe

The probe is constructed using three orthogonal dipole sensors arranged on an interlocking, triangular prism core. The probe has built-in shielding against static charges and is contained within a PEEK cylindrical enclosure material at the tip.

The probe's characteristics are:

Frequency Range	30MHz – 6GHz
Length	337 mm
Probe tip external diameter	2.5 mm
Typical distance between dipoles and the probe tip	1 mm
Axial Isotropy (in human-equivalent liquids)	±0.3 dB
Hemispherical Isotropy (in human-equivalent liquids)	±0.5 dB
Linearity	±0.2 dB
Maximum operating SAR	100 W/kg
Lower SAR detection threshold	0.001 W/kg

A.2.3 SAM Phantom

The shell corresponds to the specifications of the Specific Anthropomorphic Mannequin (SAM) phantom defined in IEEE 1528 and IEC 62209-1. It enables the dosimetric evaluation of left and right hand phone usage as well as body mounted usage at the flat phantom region. A cover prevents evaporation of the liquid. Reference markings on the phantom allow the complete setup of all predefined phantom positions and measurement grids by teaching three points with the robot.

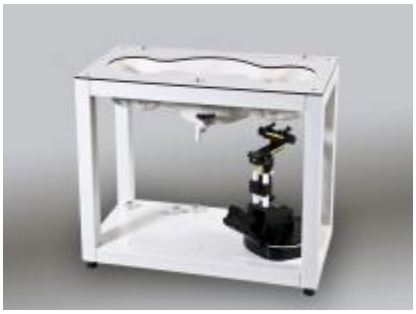

The phantom's characteristics are:

Material	Vinylester, glass fiber reinforced (VE-GF)
Shell thickness	2 mm ± 0.2 mm
Shell thickness at ERP	6 ± 0.2 mm
Filling volume	25 Liters
Dimensions	Length: 1000mm / Width: 500mm

Printed copies are not controlled documents

A.2.4 Flat Phantom

Phantom for compliance testing of handheld and body-mounted wireless devices in the frequency range of 30 MHz to 6 GHz. ELI is fully compatible with the IEC 62209-2 standard and all known tissue simulating liquids. ELI has been optimized regarding its performance and can be integrated into our standard phantom tables. A cover prevents evaporation of the liquid. Reference markings on the phantom allow installation of the complete setup, including all predefined phantom positions and measurement grids, by teaching three points. The phantom is compatible with all SPEAG dosimetric probes and dipoles.

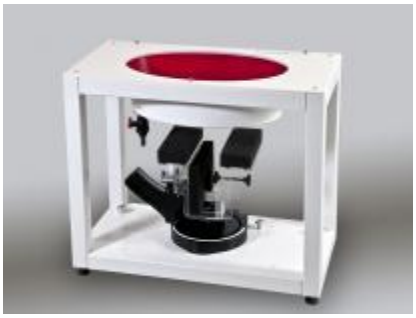

The phantom's characteristics are:

Material	Vinylester, glass fiber reinforced (VE-GF)
Shell thickness	2 mm ± 0.2 mm
Filling volume	30 Liters approx.
Dimensions	Major axis: 600mm / Minor axis: 400mm

A.2.5 Device Positioner

The SAR in the phantom is approximately inversely proportional to the square of the distance between the source and the liquid surface. For a source at 5 mm distance, a positioning uncertainty of 0.5 mm would produce a SAR uncertainty of 20%. Accurate device positioning is therefore crucial for accurate and repeatable measurements. The positions in which the devices must be measured are defined by the standards.

The DASY device holder is designed to cope with the different positions given in the standard. It has two scales for device rotation (with respect to the body axis) and device inclination (with respect to the line between the ear reference points). The rotation center for both scales is the ear reference point (ERP). Thus the device needs no repositioning when changing the angles.

The DASY device holder is constructed of low-loss POM material having the following dielectric parameters: relative permittivity ε=3 and loss tangent δ=0.02. The amount of dielectric material has been reduced in the closest vicinity of the device, since measurements have suggested that the influence of the clamp on the test results could thus be lowered.

A simple but effective and easy-to-use extension for the Mounting Device; facilitates testing of larger devices according to IEC 62209-2 (e.g., laptops, cameras, etc.); lightweight and fits easily on the upper part of the Mounting Device in place of the phone positioner. The extension is fully compatible with the Twin SAM, ELI and other Flat Phantoms.

Printed copies are not controlled documents

A.3 Data Evaluation

- **Power Reference measurement**

The robot measures the E field in a specified reference position that can be either the selected section's grid reference point or a user point in this section at 4mm of the inner surface of the phantom, 2mm for frequencies above 3GHz.

- **Area Scan**

Measurement procedures for evaluating SAR from wireless handsets typically start with a coarse measurement grid to determine the approximate location of the local peak SAR values. This is known as the area-scan procedure. The SAR distribution is scanned along the inside surface of one side of the phantom head, at least for an area larger than the projection of the handset and antenna. The distance between the measured points and phantom surface should be less than 8 mm, and should remain constant (with variation less than ± 1 mm) during the entire scan in order to determine the locations of the local peak SAR with sufficient accuracy. The angle between the probe axis and the surface normal line is recommended but not required to be less than 30°. If this angle is larger than 30° and the closest point on the probe-tip housing to the phantom surface is closer than a probe diameter, the boundary effect may become larger and polarization dependent. This additional uncertainty needs to be analyzed and accounted for. To achieve this, modified test procedures and additional uncertainty analyses not described in this recommended practice may be required. The measurement and interpolation point spacing should be chosen such as to allow identification of the local peak locations to within one-half of the linear dimension of a side of the zoom-scan volume. Because a local peak having specific amplitude and steep gradients may produce a lower peak spatial-average SAR compared to peaks with slightly lower amplitude and less steep gradients, it is necessary to evaluate these other peaks as well. However, since the spatial gradients of local SAR peaks are a function of the wavelength inside the tissue-equivalent liquid and the incident magnetic field strength, it is not necessary to evaluate local peaks that are less than 2 dB or more below the global maximum peak. Two-dimensional spline algorithms (Brishoual et al. 2001; Press et al., 1996) are typically used to determine the peaks and gradients within the scanned area. If a peak is found at a distance from the scan border of less than one-half the edge dimension of the desired 1 g or 10 g cube, the measurement area should be enlarged if possible.

- **Zoom Scan**

To evaluate the peak spatial-average SAR values for 1 g or 10 g cubes, fine resolution volume scans, called zoom scans, are performed at the peak SAR locations identified during the area scan. The minimum zoom scan volume size should extend at least 1.5 times the edge dimension of a 1 g cube in all directions from the center of the scan volume, for both 1 g and 10 g peak spatial-average SAR evaluations. Along the phantom curved surfaces, the front face of the volume facing the tissue/liquid interface conforms to the curved boundary, to ensure that all SAR peaks are captured. The back face should be equally distorted to maintain the correct averaging mass. The flatness and orientation of the four side faces are unchanged from that of a cube whose orientation is within ± 30° of the line normal to the phantom at the center of the cube face next to the phantom surface. The peak local SAR locations that were determined in the area scan (interpolated values) should be used for the centers of the zoom scans. If a scan volume cannot be centered due to proximity of a phantom shape feature, the probe should be tilted to allow scan volume enlargement. If probe tilt is not feasible, the zoom-scan origin may be shifted, but not by more than half of the 1 g or 10 g cube edge dimension.

After the zoom-scan measurement, extrapolations from the closest measured points to the surface, for example along lines parallel to the zoom-scan centerline, and interpolations to a finer resolution between all measured and extrapolated points are performed. Extrapolation algorithm considerations are described in 6.5.3, and 3-D spline methods (Brishoual et al., 2001; Kreyszig, 1983; Press et al., 1996) can be used for interpolation. The peak spatial-average SAR is finally determined by a numerical averaging of the local SAR values in the interpolation grid, using for example a trapezoidal algorithm for the integration (averaging).

In some areas of the phantom, such as the jaw and upper head regions, the angle of the probe with respect to the line normal to the surface may be relatively large, e.g., greater than ± 30º, which could increase the boundary effect error to a larger level. In these cases, during the zoom scan a change in the orientation of the probe, the phantom, or both is recommended but not required for the duration of

Printed copies are not controlled documents

the zoom scan, so that the angle between the probe axis and the line normal to the surface is within 30º for all measurement points.

- **Power Drift measurement**

The robot re-measures the E-Field in the same reference location measured at the Power Reference. The drift measurement gives the field difference in dB from the first to the last reference reading. This allows a user to monitor the power drift of the device under test that must remain within a maximum variation of ±5%.

- **Post-processing**

The procedure for spatial peak SAR evaluation has been implemented according to the IEEE1528 and IEC 62209-1/2 standards. It can be conducted for 1g and 10g.

The software allows evaluations that combine measured data and robot positions, such as:

- ✓ Maximum search
- ✓ Extrapolation
- ✓ Boundary correction
- ✓ Peak search for averaged SAR

Interpolation between the measured points is performed when the resolution of the grid is not fine enough to compute the average SAR over a given mass.

Extrapolation routines are used to obtain SAR values between the lowest measurement points and the inner phantom surface. The extrapolation is determined by the surface detection distance and the probe sensor offset. Several measurements at different distances are necessary for the extrapolation.

Printed copies are not controlled documents

A.4 System and Liquid Check

A.4.1 System Check

The system performance check verifies that the system operates within its specifications. System and operator errors can be detected and corrected. It is recommended that the system performance check be performed prior to any usage of the system in order to guarantee reproducible results.

The system performance check uses normal SAR measurements in a simplified setup with a well characterized source. This setup was selected to give a high sensitivity to all parameters that might fail or vary over time. The system check does not intend to replace the calibration of the components, but indicates situations where the system uncertainty is exceeded due to drift or failure.

In the simplified setup for system check, the EUT is replaced by a calibrated dipole and the power source is replaced by a controlled continuous wave generated by a signal generator. The calibrated dipole must be placed beneath the flat phantom section of the phantom at the correct distance.

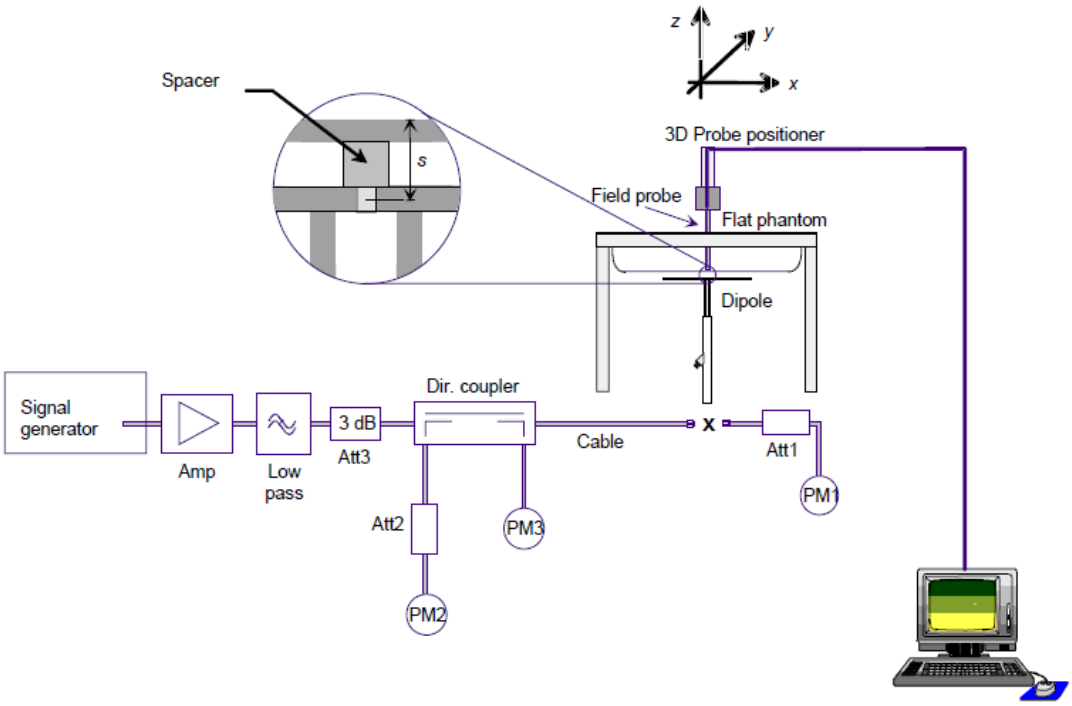

The equipment setup is shown below:

- ✓ Signal Generator
- ✓ Amplifier
- ✓ Directional coupler
- ✓ Power meter
- ✓ Calibrated dipole

The output power on dipole port must be set to 20dBm (100mW) and SAR results are normalized to a forward power of 1W to compare the values with the calibration reports results as described at IEEE 1528 and IEC 62209 standards.

Printed copies are not controlled documents

A.4.2 Liquid Check

The dielectric parameters check is done prior to the use of the tissue simulating liquid. The verification is made by comparing the relative permittivity and conductivity to the values recommended by the applicable standards.

The liquid verification was performed using the following test setup:

- ✓ VNA (Vector Network Analyzer)
- ✓ Open-Short-Load calibration kit
- ✓ RF Cable
- ✓ Open-Ended Coaxial probe
- ✓ DAK software tool
- ✓ SAR Liquid
- ✓ De-ionized water
- ✓ Thermometer

These are the target dielectric properties of the tissue-equivalent liquid material as defined in FCC OET KDB 865664 D01.

Frequency	Body SAR	
(MHz)	ε_r	σ (S/m)
150	61.9	0.80
300	58.2	0.92
450	56.7	0.94
835	55.2	0.97
900	55.0	1.05
1450	54.0	1.30
1800-2000	53.3	1.52
2450	52.7	1.95
3000	52.0	2.73
5800	48.2	6.00

(ε_r = relative permittivity, σ = conductivity and ρ = 1000 kg/m3)

The measurement system implement a SAR error compensation algorithm as documented in IEEE Std 1528-2013 (equivalent to draft standard IEEE P1528-2011) to automatically compensate the measured SAR results for deviations between the measured and required tissue dielectric parameters (applied to only scale up the measured SAR, and not downward) so, according to FCC OET KDB 865664 D01, the tolerance for ε_r and σ may be relaxed to ± 10%.

Printed copies are not controlled documents

A.5 Test Equipment List

SPEAG SAR System 1

ID	Device	Type/Model	Serial Number	Manufacturer	Calibration Date	Calibration Due Date
0260	Dosimetric E-field Probe	EX3DV4	7325	SPEAG	2016-12-08	2017-12-08
0418	Data Acquisition Electronics	DAE4	1496	SPEAG	2016-12-06	2017-12-06
0243	Electro-Optical Converter	EOC60	-	SPEAG	NA	NA
0229	Light Beam Unit	LB5 / 80	-	di-soric	NA	NA
0231	6-axis Robot	TX60 L	F12/5MZ3A1/A/01	STAÜBLI	NA	NA
0233	Robot Controller	CS8C	F12/5MZ3A1/C/01	STAÜBLI	NA	NA
0235	Measurement Server	DASY5 P/N: SE UMS 011 EA	1444	SPEAG	NA	NA
0222	Oval Flat Phantom	ELI v5.0	1260	SPEAG	NA	NA
0218	Laptop Holder	P/N SN LHA 001 CD	-	SPEAG	NA	NA
0223	Measurement SW	DASY52	v52.8.8.1258	SPEAG	NA	NA
0225	Post processing SW	SEMCAD X	v14.6.10	SPEAG	NA	NA

Shared Instrumentation

ID	Device	Type/Model	Serial Number	Manufacturer	Calibration Date	Calibration Due Date
0398	Temperature & Humidity Logger	TR-72NW-H + HHA-3151	Logger: 62180216 / Sensor: 0202622A	TandD	2016-02-01	2018-02-01
0099	USB Power Sensor	NRP-Z81	102279	R&S	2015-09-10	2017-09-10
0098	USB Power Sensor	NRP-Z81	102278	R&S	2015-09-10	2017-09-10
0114	Vector Signal Generator	ESG E4438C	MY45092885	Agilent	NA	NA
0239	2450MHz System Validation Dipole	D2450V2	937	SPEAG	2016-06-22	2018-06-22
0124	5GHz System Validation Dipole	D5GHzv2	1164	SPEAG	2015-06-18	2017-06-18
0230	Vector Reflectometer	PLANAR R140	0131013	Copper Mountain Technologies	2015-08-03	2017-08-03
0237	Dielectric Probe Kit	DAKS-3.5	1037	SPEAG	2016-06-14	2018-06-14
0224	Liquid measurement SW	DAKS-3.5	V2.20.533	SPEAG	NA	NA
0408	Thermometer	DTM 3000	3429	LKM	2016-05-19	2017-05-19
0170	Power Amplifier	SAM-01	151922	ETS-Lindgren	NA	NA
0412	Coupler	CD0.5-8-20-30	1251-002	Amd-group	NA	NA

Tissue Simulant Liquids

TSL	Manufacturer / Model	Freq Range (MHz)	Main Ingredients
Body WideBand	SPEAG MBBL600-6000V6 Batch 160630-01	600-6000	Ethanediol, Sodium petroleum sulfonate, Hexylene Glycol / 2-Methyl-pentane-2.4-diol, Alkoxylated alcohol

Printed copies are not controlled documents

A.6 Measurement Uncertainty Evaluation

DASY5 Uncertainty Budget According to IEEE 1528-2013 and IEC 62209-1/2011 (3 - 6 GHz range)								
Error Description	Uncert. value	Prob. Dist.	Div.	(ci) 1g	(ci) 10g	Std. Unc. (1g)	Std. Unc. (10g)	(vi) veff
Measurement System								
Probe Calibration	±6.55 %	N	1	1	1	±6.55 %	±6.55 %	∞
Axial Isotropy	±4.7 %	R	√3	0.7	0.7	±1.9 %	±1.9 %	∞
Hemispherical Isotropy	±9.6 %	R	√3	0.7	0.7	±3.9 %	±3.9 %	∞
Boundary Effects	±2.0 %	R	√3	1	1	±1.2 %	±1.2 %	∞
Linearity	±4.7 %	R	√3	1	1	±2.7 %	±2.7 %	∞
System Detection Limits	±1.0 %	R	√3	1	1	±0.6 %	±0.6 %	∞
Modulation Responsem	±2.4 %	R	√3	1	1	±1.4 %	±1.4 %	∞
Readout Electronics	±0.3 %	N	1	1	1	±0.3 %	±0.3 %	∞
Response Time	±0.8 %	R	√3	1	1	±0.5 %	±0.5 %	∞
Integration Time	±2.6 %	R	√3	1	1	±1.5 %	±1.5 %	∞
RF Ambient Noise	±3.0 %	R	√3	1	1	±1.7 %	±1.7 %	∞
RF Ambient Reflections	±3.0 %	R	√3	1	1	±1.7 %	±1.7 %	∞
Probe Positioner	±0.8 %	R	√3	1	1	±0.5 %	±0.5 %	∞
Probe Positioning	±6.7 %	R	√3	1	1	±3.9 %	±3.9 %	∞
Max. SAR Eval.	±4.0 %	R	√3	1	1	±2.3 %	±2.3 %	∞
Test Sample Related								
Device Positioning	±2.9 %	N	1	1	1	±2.9 %	±2.9 %	145
Device Holder	±3.6 %	N	1	1	1	±3.6 %	±3.6 %	5
Power Drift	±5.0 %	R	√3	1	1	±2.9 %	±2.9 %	∞
Power Scalingp	±0.0 %	R	√3	1	1	±0.0 %	±0.0 %	∞
Phantom and Setup								
Phantom Uncertainty	±6.6 %	R	√3	1	1	±3.8 %	±3.8 %	∞
SAR correction	±1.9 %	R	√3	1	0.84	±1.1 %	±0.9 %	∞
Liquid Conductivity (mea.)DAK	±2.5 %	R	√3	0.78	0.71	±1.1 %	±1.0 %	∞
Liquid Permittivity (mea.) DAK	±2.5 %	R	√3	0.26	0.26	±0.3 %	±0.4 %	∞
Temp. unc. - Conductivity BB	±3.4 %	R	√3	0.78	0.71	±1.5 %	±1.4 %	∞
Temp. unc. - Permittivity BB	±0.4 %	R	√3	0.23	0.26	±0.1 %	±0.1 %	∞
Combined Std. Uncertainty						±12.3 %	±12.2 %	748
Expanded STD Uncertainty						**±24.6 %**	**±24.5 %**	

SPEAG System Uncertainty budget (IEEE 1528-2013 & IEC 62209-1:2011)

Printed copies are not controlled documents

DASY5 Uncertainty Budget According to IEC 62209-2/2010 [3] (30 MHz - 6 GHz range)								
Error Description	Uncert. value	Prob. Dist.	Div.	(ci) 1g	(ci) 10g	Std. Unc. (1g)	Std. Unc. (10g)	(vi) veff
Measurement System								
Probe Calibration	±6.55 %	N	1	1	1	±6.55 %	±6.55 %	∞
Axial Isotropy	±4.7 %	R	√3	0.7	0.7	±1.9 %	±1.9 %	∞
Hemispherical Isotropy	±9.6 %	R	√3	0.7	0.7	±3.9 %	±3.9 %	∞
Linearity	±4.7 %	R	√3	1	1	±2.7 %	±2.7 %	∞
Modulation Response	±2.4 %	R	√3	1	1	±1.4 %	±1.4 %	∞
System Detection Limits	±1.0 %	R	√3	1	1	±0.6 %	±0.6 %	∞
Boundary Effects	±2.0 %	R	√3	1	1	±1.2 %	±1.2 %	∞
Readout Electronics	±0.3 %	N	1	1	1	±0.3 %	±0.3 %	∞
Response Time	±0.8 %	R	√3	1	1	±0.5 %	±0.5 %	∞
Integration Time	±2.6 %	R	√3	1	1	±1.5 %	±1.5 %	∞
RF Ambient Noise	±3.0 %	R	√3	1	1	±1.7 %	±1.7 %	∞
RF Ambient Reflections	±3.0 %	R	√3	1	1	±1.7 %	±1.7 %	∞
Probe Positioner	±0.8 %	R	√3	1	1	±0.5 %	±0.5 %	∞
Probe Positioning	±6.7 %	R	√3	1	1	±3.9 %	±3.9 %	∞
Post-processing	±4.0 %	R	√3	1	1	±2.3 %	±2.3 %	∞
Test Sample Related								
Device Holder	±3.6 %	N	1	1	1	±3.6 %	±3.6 %	5
Test sample Positioning	±2.9 %	N	1	1	1	±2.9 %	±2.9 %	145
Power Scaling	±0.0 %	R	√3	1	1	±0.0 %	±0.0 %	∞
Power Drift	±5.0 %	R	√3	1	1	±2.9 %	±2.9 %	∞
Phantom and Setup								
Phantom Uncertainty	±7.9 %	R	√3	1	1	±4.4 %	±4.4 %	∞
SAR correction	±1.9 %	R	√3	1	0.84	±1.1 %	±0.9 %	∞
Liquid Conductivity (mea.)DAK	±2.5 %	R	√3	0.78	0.71	±1.1 %	±1.0 %	∞
Liquid Permittivity (mea.) DAK	±2.5 %	R	√3	0.26	0.26	±0.3 %	±0.4 %	∞
Temp. unc. - Conductivity BB	±3.4 %	R	√3	0.78	0.71	±1.5 %	±1.4 %	∞
Temp. unc. - Permittivity BB	±0.4 %	R	√3	0.23	0.26	±0.1 %	±0.1 %	∞
Combined Std. Uncertainty						±12.5 %	±12.4 %	748
Expanded STD Uncertainty						**±25.1 %**	**±25.0 %**	

SPEAG System Uncertainty budget (IEC 62209-2:2010)

Printed copies are not controlled documents

A.7 RF Exposure Limits

SAR assessments have been made in line with the requirements of FCC 47 CFR Part §2.1093 and RSS 102, Issue 5 on the limitation of exposure of the general population / uncontrolled exposure for portable devices.

Exposure Type	General Population / Uncontrolled Environment
Peak spatial-average SAR (averaged over any 1 gram of tissue)	**1.6 W/kg**
Whole body average SAR	**0.08 W/kg**
Peak spatial-average SAR (extremities) (averaged over any 10 grams of tissue)	**4.0 W/kg**

Printed copies are not controlled documents

Annex B. Test Results

B.1 Test Conditions

B.1.1 SAR Test positions relative to the phantom

The device under test was an Intel® Tri-Band Wireless-AC 18265 card inside in host platform tablet (T17G) using a set of PIFA antennas. The card was operated utilizing proprietary software (DRTU version 1.9.1-04155) and each channel was measured using a broadband power meter to determine the maximum average power.

According to FCC OET KDB 616217 D04, the back surface and edges of the tablet should be tested for SAR compliance with the tablet touching the phantom. The SAR Test Exclusion Threshold in FCC OET KDB 447498 D01 can be applied to determine SAR test exclusion for adjacent edge configurations.
The closest distance from the antenna to an adjacent tablet edge is used to determine if SAR testing is required for the adjacent edges, with the adjacent edge positioned against the phantom and the edge containing the antenna positioned perpendicular to the phantom.

Considering the antenna location diagrams in *Annex F* and the test exclusions described before, the surfaces/edges to be measured for each antenna are:

Antenna	Main	Aux
Position	• Back face • Top edge	• Back face • Top edge • Right edge

See *B.1.3 Evaluation Exclusion and Test Reductions* for a more detailed list of the applied reductions.

B.1.2 Test signal, Output power and Test Frequencies

The device was put into operation by using an own control software (DRTU version 1.9.1-04155) to program the test mode required for select the continuous transmission with 100% duty cycle.

The output power of the device was set to transmit at maximum power for all tests.

Printed copies are not controlled documents

B.1.3 Evaluation Exclusion and Test Reductions

SAR evaluation exclusion

The SAR Test Exclusion Threshold in FCC OET KDB 447498 D01 v06 can be applied to determine SAR test exclusion for adjacent edge configurations. For 100MHz to 6GHz and test separation distances ≤50mm, the 1-g and 10-g SAR test exclusion thresholds are determined by the following formula:

$$[(\text{max. power of channel, including tune} - \text{up tolerance, mW})/(\text{min. test separation distance, mm})] \cdot \left[\sqrt{f_{(GHz)}}\right] \leq 3.0\ for\ 1g\ SAR, and \leq 7.5\ for\ 10g\ extremity\ SAR \quad (1)$$

Where:

- f(GHz) is the RF channel transmit frequency in GHz
- Power and distance are rounded to the nearest mW and mm before calculation
- The result is rounded to one decimal place for comparison
- The values 3.0 and 7.5 are referred to as numeric thresholds

The test exclusions are applicable only when the minimum test separation distance is ≤ 50 mm, and for transmission frequencies between 100 MHz and 6 GHz. When the minimum test separation distance is < 5 mm, a distance of 5 mm is applied to determine SAR test exclusion.

For test separation distances > 50 mm, the 1-g and 10-g SAR test exclusion thresholds are determined using the following formulas:

$$\langle(Power\ allowed\ at\ numeric\ threshold\ for\ 50\ mm\ in\ (1)) + (test\ separation\ distance - 50\ mm) \cdot (f_{MHz}/150)\rangle mW,\ for\ 100MHz\ to\ 1500MHz \quad (2)$$

$$\langle(Power\ allowed\ at\ numeric\ threshold\ for\ 50\ mm\ in\ (1)) + (test\ separation\ distance - 50\ mm) \cdot 10)\rangle mW,\ for\ 1500MHz\ and\ \leq 6GHz \quad (3)$$

LAN Antenna	Band Name	Output power		Back Face	Top Edge	Right Edge	Left Edge	Bottom Edge	Back Face	Top Edge	Right Edge	Left Edge	Bottom Edge
		dBm	mW										
WLAN Main	DTS	13.0	20.0	**≤ 50**	**≤ 50**	>50	>50	>50	T	T	R	R	R
	U-NII-1	12.0	15.8	**≤ 50**	**≤ 50**	>50	>50	>50	R	R	R	R	R
	U-NII-2A	12.0	15.8	**≤ 50**	**≤ 50**	>50	>50	>50	T	T	R	R	R
	U-NII-2C	11.5	14.1	**≤ 50**	**≤ 50**	>50	>50	>50	T	T	R	R	R
	U-NII-3	11.5	14.1	**≤ 50**	**≤ 50**	>50	>50	>50	T	T	R	R	R
WLAN Aux	DTS	15.0	31.6	**≤ 50**	**≤ 50**	**≤ 50**	>50	>50	T	T	T	R	R
	U-NII-1	13.5	22.4	**≤ 50**	**≤ 50**	**≤ 50**	>50	>50	R	R	R	R	R
	U-NII-2A	13.5	22.4	**≤ 50**	**≤ 50**	**≤ 50**	>50	>50	T	T	T	R	R
	U-NII-2C	13.5	22.4	**≤ 50**	**≤ 50**	**≤ 50**	>50	>50	T	T	T	R	R
	U-NII-3	13.5	22.4	**≤ 50**	**≤ 50**	**≤ 50**	>50	>50	T	T	T	R	R
	BT	11.5	14.12	**≤ 50**	**≤ 50**	**≤ 50**	>50	>50	T	T	T	R	R

T: Tested position
R: Reduced

See *Annex F* for a more detailed explanation of the separation distance related to the platform.

Printed copies are not controlled documents

SAR test reduction

General SAR test reduction

According to FCC OET KDB 447498 D01, testing of other required channels within the operating mode of a frequency band is not required when the reported 1-g or 10-g SAR for the mid-band or highest output power channel is:

- ≤ 0.8 W/kg or 2.0 W/kg, for 1-g or 10-g respectively, when the transmission band is ≤ 100 MHz
- ≤ 0.6 W/kg or 1.5 W/kg, for 1-g or 10-g respectively, when the transmission band is between 100 MHz and 200 MHz
- ≤ 0.4 W/kg or 1.0 W/kg, for 1-g or 10-g respectively, when the transmission band is ≥ 200 MHz

WLAN SAR Test reduction

Transmission Mode	SAR test exclusion/reduction
DSSS	According to FCC OET KDB 248227 D01, SAR is measured for 2.4 GHz 802.11b, SAR test reduction is determined according to the following: ▪ When the reported SAR of the highest measured maximum output power channel for the exposure configuration is ≤ 0.8 W/kg, no further SAR testing is required for 802.11b DSSS in that exposure configuration. ▪ When the reported SAR is > 0.8 W/kg, SAR is required for that exposure configuration using the next highest measured output power channel. When any reported SAR is > 1.2 W/kg, SAR is required for the third channel. According to FCC OET KDB 248227 D01, SAR is not required for 2.4 GHz OFDM conditions when the highest reported SAR for DSSS is adjusted by the ratio of OFDM to DSSS specified maximum output power and the adjusted SAR is ≤ 1.2 W/kg.
OFDM	According to FCC OET KDB 248227 D01, 802.11a/g/n/ac modes have the same specified maximum output power, largest channel bandwidth, lowest order modulation and lowest data rate, the lowest order 802.11 mode is selected; i.e., 802.11a is chosen over 802.11n then 802.11ac or 802.11g is chosen over 802.11n. According to FCC OET KDB 248227 D01, an *initial test configuration* is determined for OFDM and DSSS transmission modes according to the channel bandwidth, modulation and data rate combination(s) with the highest maximum output power specified for production units in each standalone and aggregated frequency band. SAR is measured using the highest measured maximum output power channel. SAR test reduction for subsequent highest output test channels is determined according to reported SAR of the initial test configuration. The *initial test configuration* for 5 GHz OFDM transmission modes is determined by the 802.11 configuration with the highest maximum output power specified for production units, including tune-up tolerance, in each standalone and aggregated frequency band. SAR for the initial test configuration is measured using the highest maximum output power channel determined by the default power measurement procedures. According to FCC OET KDB 248227 D01, when the reported SAR of the initial test configuration is > 0.8 W/kg, SAR measurement is required for subsequent next highest measured output power channel(s) in the initial test configuration until reported SAR is ≤ 1.2 W/kg or all required channels are tested.

Printed copies are not controlled documents

B.2 Conducted Power Measurements

B.2.1 WLAN 2.4GHz (DTS)

Band	Mode	Data Rate	Ch #	Freq [MHz]	ChainA Avg Pwr [dBm]	ChainA Tune-up Pwr [dBm]	ChainB Avg Pwr [dBm]	ChainB Tune-up Pwr [dBm]	SAR Test?
2.4GHz (DTS)	802.11b	1Mbps	1	2412	12.98	13.00	15.00	15.00	No[3]
			6	2437	**13.00**	13.00	**15.00**	15.00	Yes
			11	2462	13.00	13.00	14.96	15.00	Yes
	802.11g	6Mbps	1	2412	NR[1]	12.50	NR[1]	14.50	No[2,4]
			6	2437		12.50		14.50	
			11	2462		12.50		14.50	
	802.11n20	HT0	1	2412		12.50		14.50	No[2,4]
			6	2437		12.50		14.50	
			11	2462		12.50		14.50	
	802.11n40		3	2422		12.50		14.50	No[2,4]
			6	2437		12.50		14.50	
			9	2452		12.50		14.50	

Initial test configuration

1. NR: Not Required
2. As per FCC OET KDB 248227 D01, conducted output power and SAR testing are not required for 802.11g/n20/n40 channels when the highest reported SAR for DSSS is adjusted by the ratio of OFDM to DSSS specified maximum output power and the adjusted SAR is ≤ 1.2W/kg.
3. According to FCC OET KDB 248227 D01 v02r02, when the reported SAR of the initial test configuration is < 0.8 W/kg, SAR measurement is not required for subsequent configuration
4. When the highest reported SAR for the initial test configuration (when applicable, include subsequent highest output channels), according to the initial test position or fixed exposure requirements, is adjusted by the ratio of the subsequent test configuration to the initial test configuration specified maximum output power and the adjusted SAR is ≤1.2 W/Kg, SAR is not required for that subsequent test configuration

Printed copies are not controlled documents

B.2.2 WLAN 5GHz (U-NII)

5.2GHz and 5.3GHz (U-NII-1 and U-NII-2A)

Band	Mode Data Rate	Ch #	Freq [MHz]	Main Avg Pwr [dBm]	Main Tune-up Pwr [dBm]	Aux Avg Pwr [dBm]	Aux Tune-up Pwr [dBm]	SAR Test?
5.2GHz (U-NII-1)	802.11a 6Mbps	36	5180	NR[1]	12.00	NR[1]	12.50	No[2]
		40	5200		12.00		12.50	
		44	5220		12.00		12.50	
		48	5240		12.00		12.50	
	802.11n20 HT0	36	5180		11.50		12.00	
		40	5200		11.50		12.00	
		44	5220		11.50		12.00	
		48	5240		11.50		12.00	
	802.11n40 HT0	38	5190		11.50		12.00	
		46	5230		11.50		12.00	
	802.11ac80 VHT0	42	5210		11.50		12.00	

Initial test configuration

1. NR: Not Required
2. When the same maximum output power is specified for both bands, begin SAR measurement in U-NII-2A band by applying the OFDM SAR requirements. If the highest reported SAR for a test configuration is ≤ 1.2 W/kg, SAR is not required for U-NII-1 band (see §B.5.2 in this document).

Band	Mode Data Rate	Ch #	Freq [MHz]	Main Avg Pwr [dBm]	Main Tune-up Pwr [dBm]	Aux Avg Pwr [dBm]	Aux Tune-up Pwr [dBm]	SAR Test?
5.3GHz (U-NII-2A)	802.11a 6Mbps	52	5260	11.98	12.00	12.50	12.50	Yes
		56	5280	11.97	12.00	12.45	12.50	No[3]
		60	5300	11.96	12.00	**12.50**	12.50	Yes
		64	5320	**12.00**	12.00	12.50	12.50	Yes
	802.11n20 HT0	52	5260	NR[1]	11.50	NR[1]	12.00	No[2,4]
		56	5280		11.50		12.00	
		60	5300		11.50		12.00	
		64	5320		11.50		12.00	
	802.11n20 HT0 (MIMO)	64	5320	11.50	11.50	11.50	11.50	Yes
	802.11n40 HT0	54	5270	NR[1]	11.50	NR[1]	12.00	No[4]
		62	5310		11.50		12.00	
	802.11ac80 VHT0	58	5290		11.50		12.00	

Initial test configuration

1. NR: Not Required
2. When multiple transmission modes (802.11a/g/n/ac) have the same specified maximum output power, largest channel bandwidth, lowest order modulation and lowest data rate, lowest order 802.11 mode is selected (i.e. a, g, n, then ac)
3. According to FCC OET KDB 248227 D01 v02r02, when the reported SAR of the initial test configuration is < 0.8 W/kg, SAR measurement is not required for subsequent configuration.
4. When the highest reported SAR for the initial test configuration (when applicable, include subsequent highest output channels), according to the initial test position or fixed exposure requirements, is adjusted by the ratio of the subsequent test configuration to the initial test configuration specified maximum output power and the adjusted SAR is ≤1.2 W/Kg, SAR is not required for that subsequent test configuration

Printed copies are not controlled documents

5.6GHz (U-NII-2C)

Band	Mode Data Rate	Ch #	Freq [MHz]	Main Avg Pwr [dBm]	Main Tune-up Pwr [dBm]	Aux Avg Pwr [dBm]	Aux Tune-up Pwr [dBm]	SAR Test?
5.6GHz (U-NII-2C)	802.11a 6Mbps	100	5500	11.50	11.50	13.45	13.50	No[4]
		104	5520	11.50	11.50	13.46	13.50	No[4]
		108	5540	11.48	11.50	13.46	13.50	No[4]
		112	5560	11.44	11.50	13.50	13.50	Yes
		116	5580	11.49	11.50	13.43	13.50	No[4]
		120	5600	11.45	11.50	**13.50**	13.50	Yes
		124	5620	**11.50**	11.50	13.50	13.50	Yes
		128	5640	11.50	11.50	13.50	13.50	Yes
	802.11n20 HT0	100	5500	NR[1]	11.00	NR[1]	13.00	No[3,5]
		104	5520		11.00		13.00	
		108	5540		11.00		13.00	
		112	5560		11.00		13.00	
		116	5580		11.00		13.00	
		120	5600		11.00		13.00	
		124	5620		11.00		13.00	
		128	5640		11.00		13.00	
	802.11n40 HT0	102	5510		11.00		13.00	No[3,5]
		110	5550		11.00		13.00	
		118	5590		11.00		13.00	
		126	5630		11.00		13.00	
	802.11ac80 VHT0	106	5530		11.00	13.00	13.00	Yes
		122	5610		11.00	12.97	13.00	No[6]

Initial test configuration

1. NR: Not Required
2. When band gap channels between U-NII-2C and U-NII-3 band are supported channels in U-NII-2C band below 5.65 GHz are considered as one band and channels above 5.65 GHz, together with channels in 5.8 GHz U-NII-3 or §15.247 band, are considered as a separate band
3. When multiple transmission modes (802.11a/g/n/ac) have the same specified maximum output power, largest channel bandwidth, lowest order modulation and lowest data rate, lowest order 802.11 mode is selected (i.e. a, g, n, then ac)
4. According to FCC OET KDB 248227 D01 v02r02, when the reported SAR of the initial test configuration is < 0.8 W/kg, SAR measurement is not required for subsequent configuration
5. When the highest reported SAR for the initial test configuration (when applicable, include subsequent highest output channels), according to the initial test position or fixed exposure requirements, is adjusted by the ratio of the subsequent test configuration to the initial test configuration specified maximum output power and the adjusted SAR is ≤1.2 W/Kg, SAR is not required for that subsequent test configuration
6. SAR for subsequent highest measured maximum output power channels in the subsequent test configuration is required only when the reported SAR of the preceding higher maximum output power channel(s) in the subsequent test configuration is >1.2 W/Kg or until all required channels are tested.

Printed copies are not controlled documents

5.8GHz (U-NII-3)

Band	Mode Data Rate	Ch #	Freq [MHz]	Main Avg Pwr [dBm]	Main Tune-up Pwr [dBm]	Aux Avg Pwr [dBm]	Aux Tune-up Pwr [dBm]	SAR Test?
5.8GHz (U-NII-3)	802.11a 6Mbps	132	5660	11.50	11.50	**13.50**	13.50	Yes
		136	5680	11.50	11.50	13.43	13.50	No[4]
		140	5700	11.45	11.50	13.45	13.50	Yes
		149	5745	**11.50**	11.50	13.48	13.50	Yes
		153	5765	11.50	11.50	13.46	13.50	Yes
		157	5785	11.50	11.50	13.47	13.50	Yes
		161	5805	11.47	11.50	13.45	13.50	Yes
		165	5825	11.50	11.50	13.44	13.50	No[4]
	802.11n20 HT0	132	5660	NR[1]	11.00	NR[1]	13.00	No[3,5]
		136	5680		11.00		13.00	
		140	5700		11.00		13.00	
		149	5745		11.00		13.00	
		153	5765		11.00		13.00	
		157	5785		11.00		13.00	
		161	5805		11.00		13.00	
		165	5825		11.00		13.00	
	802.11n20 HT0 (MIMO)	132	5660	11.00	11.00	11.00	11.00	Yes
	802.11n40 HT0	134	5670	NR[1]	11.00	NR[1]	13.00	No[3,5]
		151	5755		11.00		13.00	
		159	5795		11.00		13.00	
	802.11ac80 VHT0	138	5690		11.00	12.98	13.00	No[6]
		155	5795		11.00	12.98	13.00	Yes

Initial test configuration

1. NR: Not Required
2. When band gap channels between U-NII-2C and U-NII-3 band are supported channels in U-NII-2C band below 5.65 GHz are considered as one band and channels above 5.65 GHz, together with channels in 5.8 GHz U-NII-3 or §15.247 band, are considered as a separate band
3. When multiple transmission modes (802.11a/g/n/ac) have the same specified maximum output power, largest channel bandwidth, lowest order modulation and lowest data rate, lowest order 802.11 mode is selected (i.e. a, g, n, then ac)
4. When the reported SAR of the initial test configuration is > 0.8 W/kg, SAR measurement is required for subsequent next highest measured output power channel(s) in the initial test configuration until reported SAR is ≤ 1.2 W/kg or all required channels are tested.
5. When the highest reported SAR for the initial test configuration (when applicable, include subsequent highest output channels), according to the initial test position or fixed exposure requirements, is adjusted by the ratio of the subsequent test configuration to the initial test configuration specified maximum output power and the adjusted SAR is ≤1.2 W/Kg, SAR is not required for that subsequent test configuration.
6. SAR for subsequent highest measured maximum output power channels in the subsequent test configuration is required only when the reported SAR of the preceding higher maximum output power channel(s) in the subsequent test configuration is >1.2 W/Kg or until all required channels are tested.

Printed copies are not controlled documents

B.2.3 Bluetooth

Band	Mode	Data Rate	Channel	Frequency (MHz)	Antenna	Avg Pwr [dBm]	Max output Pwr [dBm]
2.4GHz	Bluetooth v4.2	Basic rate GFSK	0	2402	Aux	9.95	11.50
			39	2441		**11.50**	11.50
			78	2480		10.78	11.50
		Basic rate π/4 DQPSK	0	2402		NR[1]	11.50
			39	2441			11.50
			78	2480			11.50
		Basic rate 8-DPSK	0	2402			11.50
			39	2441			11.50
			78	2480			11.50
		Low energy GFSK	0	2412			8.50
			20	2437			8.50
			39	2480			8.50

Initial test configuration

1. NR: Not Required

Printed copies are not controlled documents

B.3 Tissue Parameters Measurement

Body TSL

Freq. (MHz)	Target Parameters		Measured TSL Parameters		Deviation (%)		Date
	ε'	σ	ε'	σ	ε'	σ	
2450	52.70	1.95	49.60	2.07	-5.89	6.23	2017-02-08
5300	48.88	5.41	44.44	5.40	-9.08	-0.23	2017-02-08
5300	48.88	5.41	45.29	5.48	-7.35	1.29	2017-03-07
5500	48.61	5.65	44.06	5.66	-9.36	0.31	2017-02-08
5600	48.47	5.76	43.88	5.79	-9.48	0.44	2017-02-08
5600	48.47	5.76	44.07	5.88	-9.07	1.96	2017-02-27
5600	48.47	5.76	44.67	5.89	-7.85	2.21	2017-03-07
5800	48.20	6.00	43.53	6.06	-9.69	1.04	2017-02-08

See *Annex D* for more details.

B.4 System Check Measurements

Body Measurements

Frequency (MHz)	Average	Target SAR (W/Kg)	Measured SAR (W/Kg)	Drift (%)	Limit (%)	Date
2450	1g	49.40	50.36	1.94	±10	2017-02-09
	10g	23.40	23.23	-0.74		
5300	1g	75.60	82.40	8.99		2017-02-08
	10g	21.20	23.30	9.91		
5300	1g	75.60	77.42	2.41		2017-03-08
	10g	21.20	21.88	3.20		
5500	1g	80.40	81.28	1.09		2017-02-09
	10g	22.40	22.78	1.69		
5600	1g	78.20	83.20	6.39		2017-02-09
	10g	21.70	23.60	8.76		
5600	1g	78.20	84.61	8.20		2017-02-28
	10g	21.70	23.86	9.96		
5600	1g	78.20	79.47	1.63		2017-03-07
	10g	21.70	22.68	4.51		
5800	1g	76.20	76.80	-0.31		2017-02-09
	10g	21.00	21.53	0.69		

See *Annex C* for more details.

Printed copies are not controlled documents

B.5 SAR Test Results

B.5.1 802.11b/g/n – 2.4GHz - DTS

Ant	Mode Data rate	BW (MHz)	Ch #	Freq (MHz)	Position	Correct. Factor (dB)	SAR 1g (W/kg)	Reported SAR 1g (W/kg)	Plot #
Main	802.11b 1Mbps	20	6	2437	Back Face	0.00	0.83	0.83	**1**
					Top Edge	0.00	0.28	0.28	
			11	2462	Back Face	0.00	0.82	0.82	
Aux	802.11b 1Mbps	20	6	2437	Back Face	0.00	0.57	0.57	**2**
					Top Edge	0.00	0.26	0.26	
					Right Edge	0.00	0.15	0.15	

B.5.2 802.11a/n/ac – 5.3 GHz – U-NII-2A

Ant	Mode Data rate	BW (MHz)	Ch #	Freq (MHz)	Position	Correct. Factor (dB)	SAR 1g (W/kg)	Reported SAR 1g (W/kg)	Plot #
Main	802.11a 6Mbps	20	52	5260	Back Face	0.02	0.71	0.72	
					Top Edge	0.02	1.10	1.11	
			64	5320	Back Face	0.00	0.87	0.87	
					Top Edge	0.00	1.14	1.14	**3**
	802.11n20 HT0 (MIMO)	20	64	5320	Top Edge	0.00	1.00[1,2]	1.00[1,2]	
Aux	802.11a 6Mbps	20	60	5300	Back Face	0.00	0.78	0.78	
					Top Edge	0.00	0.80	0.80	**4**
					Right Edge	0.00	0.26	0.26	
	802.11n20 HT0 (MIMO)	20	64	5320	Top Edge	0.00	0.57[1,2]	0.57[1,2]	

1. The highest reported SAR for Main Antenna among all U-NII bands was found in U-NII-2A band. This channel was tested for both antennas using the target output power for MIMO transmission in order to be considered for simultaneous transmission measurements. See B.7 for a more detailed explanation of Simultaneous transmission evaluation.
2. Additional standalone SAR tests at the MIMO mode maximum output power were performed to determine simultaneous transmission SAR test exclusion according to the sum of 1-g SAR or SAR to peak location separation ratio procedures according to FCC OET KDB 447498 D01.

B.5.3 802.11a/n/ac – 5.6 GHz – U-NII-2C

Ant	Mode Data rate	BW (MHz)	Ch #	Freq (MHz)	Position	Correct. Factor (dB)	SAR 1g (W/kg)	Reported SAR 1g (W/kg)	Plot #
Main	802.11a 6Mbps	20	124	5620	Back Face	0.00	0.75	0.75	
					Top Edge	0.00	0.87	0.87	**5**
			128	5640	Top Edge	0.00	0.84	0.84	
Aux	802.11a 6Mbps	20	112	5560	Top Edge	0.00	1.14	1.14	
			120	5600	Back Face	0.00	1.11	1.11	
					Top Edge	0.00	1.29	1.29	
					Right Edge	0.00	0.22	0.22	
			124	5620	Top Edge	0.00	1.38	1.38	
					Back Face	0.00	1.18	1.18	
			128	5640	Top Edge	0.00	1.38	1.38	**6**
	802.11ac80 VHT0	80	106	5530	Top Edge	0.00	1.15	1.15	

Printed copies are not controlled documents

B.5.4 802.11a/n/ac – 5.8 GHz – U-NII-3

Ant	Mode Data rate	BW (MHz)	Ch #	Freq (MHz)	Position	Correct. Factor (dB)	SAR 1g (W/kg)	Reported SAR 1g (W/kg)	Plot #
Main	802.11a 6Mbps	20	149	5745	Back Face	0.00	0.73	0.73	
					Top Edge	0.00	0.67	0.67	
	802.11n20 HT0 (MIMO)	20	132	5660	Top Edge	0.00	0.76[1,2]	0.76[1,2]	**7**
Aux	802.11a 6Mbps	20	132	5660	Back Face	0.00	1.17	1.17	
					Top Edge	0.00	1.51	1.51	**8**
					Right Edge	0.00	0.24	0.24	
			140	5700	Top Edge	0.05	1.29	1.31	
			149	5745	Top Edge	0.02	1.29	1.30	
					Back Face	0.02	1.10	1.11	
			153	5765	Top Edge	0.04	1.25	1.26	
			157	5785	Top Edge	0.03	1.25	1.26	
			161	5805	Top Edge	0.05	1.15	1.16	
	802.11n20 HT0 (MIMO)	20	132	5660	Top Edge	0.00	0.86[1,2]	0.86[1,2]	
	802.11ac80 VHT0	80	155	5775	Top Edge	0.02	1.16	1.17	

1. The highest reported SAR for Aux Antenna among all U-NII bands was found in U-NII-3 band. This channel was tested for both antennas using the target output power for MIMO transmission in order to be considered for simultaneous transmission measurements. See B.7 for a more detailed explanation of Simultaneous transmission evaluation.
2. Additional standalone SAR tests at the MIMO mode maximum output power were performed to determine simultaneous transmission SAR test exclusion according to the sum of 1-g SAR or SAR to peak location separation ratio procedures according to FCC OET KDB 447498 D01.

B.5.5 Bluetooth – 2.4GHz - DSSS

Ant	Mode Data rate	BW (MHz)	Ch #	Freq (MHz)	Position	Correct. Factor (dB)	SAR 1g (W/kg)	Reported SAR 1g (W/kg)	Plot #
Aux	802.15 DH5	20	39	2441	Back Face	0.00	0.15	0.15	**9**
					Top Edge	0.00	0.10	0.10	
					Right Edge	0.00	0.05	0.05	

Printed copies are not controlled documents

B.6 SAR Measurement Variability

According to FCC OET KDB 865664, SAR Measurement variability is assessed when the maximum initial measured SAR is >0.8 W/kg for a certain band/mode. If the measured SAR value of the initial repeated measurement is <1.45 W/kg with <20% variation, only one repeated measurement is required to confirm that the results are not expected to have substantial variations.
A second repeated measurement is required only if the measured results for the initial repeated measurement are within 10% of the SAR limit or vary by more than 20%.
A third repeated measurement is required only if the original, first or second repeated measurement ≥1.5W/Kg and the ratio of the largest to smallest SAR for the original, first and second repeated measurement is >1.2.

Band / Mode	Position	Ch #	Freq. (MHz)	Measured SAR 1g (W/kg)	1st Repeated SAR 1g (W/Kg)	2nd Repeated SAR 1g (W/Kg)	Highest Ratio
2.45 GHz 802.11a 6Mbps	Back Face	6	2437	0.83	0.82	-	1.01
5.3GHz 802.11a 6Mbps	Top Edge	64	5320	1.14	1.10	-	1.04
5.5GHz 802.11ac80 VHT0	Top Edge	106	5530	1.15	1.05	-	1.10
5.6GHz 802.11a 6Mbps	Top Edge	132	5660	1.49	1.45	1.51	1.03
5.8GHz 802.11a 6Mbps	Top Edge	149	5745	1.29	1.16		1.11

Printed copies are not controlled documents

B.7 Simultaneous Transmission SAR Evaluation

According to FCC OET KDB 447498 D01, when the sum of 1g SAR for all simultaneously transmitting antennas in an operating mode and exposure condition combination is within the SAR limit, SAR test exclusion applies to that simultaneous transmission configuration.

Antenna	Position	Highest Reported SAR (1g)			
		WLAN 2.4GHz	WLAN 5GHz		Bluetooth
Main	Back Face	0.83	0.87		
	Top Edge	0.28	1.00 (1)	0.76 (2)	
	Right Edge	0.40*	0.40*		
Aux	Back Face	0.57	1.18		0.15
	Top Edge	0.26	0.57 (1)	0.86 (2)	0.10
	Right Edge	0.15	0.26		0.05

(1) CH64 and (2) CH132 were considered for this position in order to calculate simultaneous transmission SAR evaluation.

* According to FCC OET KDB 447498 D01, when standalone test exclusion is applied to an antenna that transmits simultaneously with other antennas, the standalone SAR must be estimated to 0.4 W/Kg for 1-g SAR when the test separation is > 50mm in order to determine simultaneous transmission test exclusion.

For WLAN 5GHz, in the case of top edge position, the maximum standalone reported SAR found for Main and Aux antenna exceed the Simultaneous SAR test exclusion for both the SAR summation and the SPLSR threshold. Due to the constraints of the technology, MIMO modes are only valid when both antennas transmit on the same channel and using a lower power per chain than the one used in SISO modes.

Based on this functionality, the worst cases found for Main and Aux, CH64 (1) and CH132 (2) respectively, were tested on each antenna individually for Top Edge position using the target power declared for each chain (section 7), resulting in the maximum reported SAR in the table below marked with * and used for Simultaneous Transmission SAR Evaluation

Position	Simultaneous Tx Antenna Combination		Σ SAR 1g (W/Kg)	Limit (W/kg)
	Main Antenna	Aux Antenna		
Back Face	WLAN 2.4GHz	WLAN 2.4GHz	1.40	1.6
	WLAN 5GHz	WLAN 5GHz	2.05	
	WLAN 5GHz	WLAN 5GHz + BT	2.20	
	WLAN 2.4GHz	BT	0.98	
	WLAN 5GHz	BT	1.02	
Top Edge	WLAN 2.4GHz	WLAN 2.4GHz	0.54	
	WLAN 5GHz (1)	WLAN 5GHz (1)	1.57 *	
	WLAN 5GHz (1)	WLAN 5GHz (1) + BT	1.67 *	
	WLAN 5GHz (2)	WLAN 5GHz (2)	1.62 *	
	WLAN 5GHz (2)	WLAN 5GHz (2) + BT	1.72 *	
	WLAN 2.4GHz	BT	0.38	
	WLAN 5GHz (1)	BT	1.10	
	WLAN 5GHz (2)	BT	0.86	
Right Edge	WLAN 2.4GHz	WLAN 2.4GHz	0.55	
	WLAN 5GHz	WLAN 5GHz	0.66	
	WLAN 5GHz	WLAN 5GHz + BT	0.71	
	WLAN 2.4GHz	BT	0.45	
	WLAN 5GHz	BT	0.45	

* For 5GHz and BT, maximum sum of 1-g SAR standalone combination configuration with maximum output power was considered for simultaneous transmission (See B.5.2 and 5.4 for more details)

Printed copies are not controlled documents

In case the sum of SAR is larger than the limit, SAR test exclusion is determined by the SAR to peak location separation ratio:

Position	Antenna	Reported SAR 1g (W/kg)	Σ SAR 1g (W/Kg)	Peak Location (cm) (x,y,z)	SAR to peak location separation ratio	Limit
Back Face	Main WLAN 5GHz	0.87	2.05	Max at (9.70, 2.10, -0.17)	0.03	0.04
	Aux WLAN 5GHz	1.18		Max at (9.58, 10.90, -0.09)		
Back Face*	Main WLAN 5GHz	0.87	2.20	Max at (9.70, 2.10, -0.17)	0.04	
	Aux WLAN 5GHz	1.18		Max at (9.58, 10.90, -0.09)		
	Aux BT	0.15		Max at (9.26, 10.84, -0.14)		
Top Edge*	Main (1) WLAN 5GHz	1.00	1.67	Max at (-0.28, 2.32, -0.40)	0.03	
	Aux (1) WLAN 5GHz	0.57		Max at (-0.28, 9.40, -0.31)		
	Aux BT	0.10		Max at (-0.34, 9.20, -0.30)		
Top Edge	Main (2) WLAN 5GHz	0.76	1.62	Max at (-0.30, 2.60, -0.41)	0.03	
	Aux (2) WLAN 5GHz	0.86		Max at (-0.46, 8.88, -0.30)		
Top Edge*	Main (2) WLAN 5GHz	0.76	1.72	Max at (-0.30, 2.60, -0.41)	0.04	
	Aux (2) WLAN 5GHz	0.86		Max at (-0.46, 8.88, -0.30)		
	Aux BT	0.10		Max at (-0.34, 9.20, -0.30)		

For simultaneous transmission the pair CH64 (1) and CH132 (2) was considered on each antenna individually for top edge position in order to calculate simultaneous transmission SAR evaluation.

* The worst case for simultaneous SAR to peak location separation ratio calculation was made considering the sum of 3 SAR results and the closest maxima distance between Main and Aux antenna (i.e. the closest distance between the peak location between Main WLAN to Aux WLAN and Main WLAN to Aux BT).

Considering the results described above and according to the simultaneous transmission evaluation exclusions described in FCC OET KDB 447498 D01, no enlarged zoom scan measurements are required.

Printed copies are not controlled documents

Annex C. Test System Plots

1. DTS - 802.11b, CH6, Main Antenna – Back Face 35
2. DTS - 802.11b, CH6, Aux Antenna – Back Face 36
3. U-NII-2A - 802.11a, CH64, Main Antenna – Top Edge 37
4. U-NII-2A - 802.11a, CH60, Aux Antenna – Top Edge 38
5. U-NII-2C - 802.11a, CH124, Main Antenna – Top Edge 39
6. U-NII-2C - 802.11a, CH128, Aux Antenna – Top Edge 40
7. U-NII-3 - 802.11n20 (MIMO), CH132, Main Antenna – Top Edge 41
8. U-NII-3 - 802.11a, CH132, Aux Antenna – Top Edge 42
9. BT - 802.15, CH39, Aux Antenna – Back Face 43
10. System Check Body Liquid 2450MHz 44
11. System Check Body Liquid 5300MHz 45
12. System Check Body Liquid 5300MHz (2) 46
13. System Check Body Liquid 5500MHz 47
14. System Check Body Liquid 5600MHz 48
15. System Check Body Liquid 5600MHz (2) 49
16. System Check Body Liquid 5600MHz (3) 50
17. System Check Body Liquid 5800MHz 51

Printed copies are not controlled documents

1. DTS - 802.11b, CH6, Main Antenna – Back Face

Test Laboratory: Intel WRF Lab; Date/Time: 2017-02-09 19:39:16

DUT: T17G+18265 NGW; Type: Convertible PC; Serial: 34.13.E8.5B.20.18

Communication System: UID 0, 802.11 (0); Communication System Band: 2.4GHz; Frequency: 2437 MHz;Communication System PAR: 0 dB
Medium parameters used (interpolated): f = 2437 MHz; σ = 2.06 S/m; ε_r = 49.615; ρ = 1000 kg/m^3
Phantom section: Flat Section
Measurement Standard: DASY5 (IEEE/IEC/ANSI C63.19-2011)

DASY Configuration:

- Probe: EX3DV4 - SN7325; ConvF(7.53, 7.53, 7.53); Calibrated: 2016-12-08;
  - Modulation Compensation:
- Sensor-Surface: 4mm (Mechanical Surface Detection), z = -29.0, 25.0
- Electronics: DAE4 Sn1496; Calibrated: 2016-12-06
- Phantom: ELI v5.0 (30deg probe tilt); Type: QDOVA002AA;
- DASY52 52.8.8(1222);

Wlan-2GHz/DTS_802.11b_CH6-2437MHz_Back_ChainA/Area Scan (51x71x1): Interpolated grid: dx=1.200 mm, dy=1.200 mm
Maximum value of SAR (interpolated) = 0.950 W/kg

Wlan-2GHz/DTS_802.11b_CH6-2437MHz_Back_ChainA/Zoom Scan (7x7x7)/Cube 0:
Measurement grid: dx=5mm, dy=5mm, dz=5mm
Reference Value = 16.59 V/m; Power Drift = 0.02 dB
Peak SAR (extrapolated) = 2.07 W/kg
SAR(1 g) = 0.826 W/kg; SAR(10 g) = 0.313 W/kg (SAR corrected for target medium)
Maximum value of SAR (measured) = 1.00 W/kg

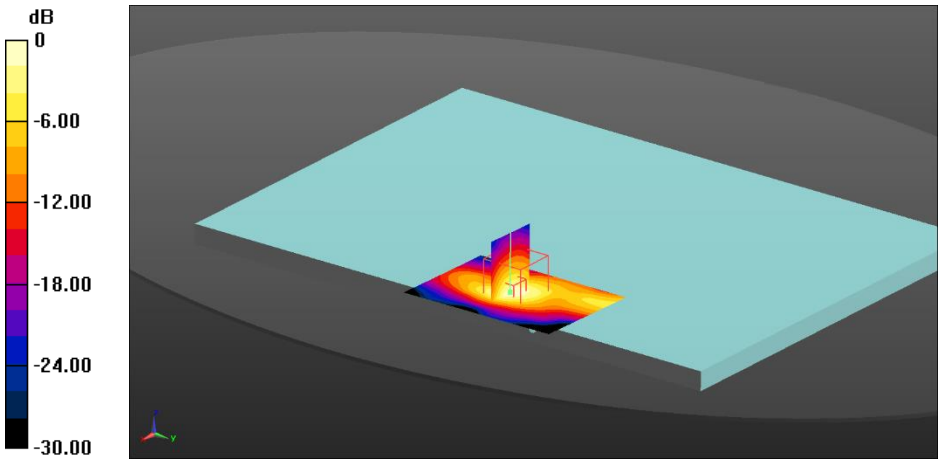

0 dB = 1.00 W/kg = 0.00 dBW/kg

Printed copies are not controlled documents

2. DTS - 802.11b, CH6, Aux Antenna – Back Face

Test Laboratory: Intel WRF Lab; Date/Time: 2017-02-09 11:48:31

DUT: T17G+18265 NGW; Type: Convertible PC; Serial: 34.13.E8.5B.20.18

Communication System: UID 0, 802.11 (0); Communication System Band: 2.4GHz; Frequency: 2437 MHz;Communication System PAR: 0 dB
Medium parameters used (interpolated): f = 2437 MHz; σ = 2.06 S/m; ε_r = 49.615; ρ = 1000 kg/m^3
Phantom section: Flat Section
Measurement Standard: DASY5 (IEEE/IEC/ANSI C63.19-2011)

DASY Configuration:

- Probe: EX3DV4 - SN7325; ConvF(7.53, 7.53, 7.53); Calibrated: 2016-12-08;
  - Modulation Compensation:
- Sensor-Surface: 4mm (Mechanical Surface Detection (Locations From Previous Scan Used)), Sensor-Surface: 4mm (Mechanical Surface Detection), z = -29.0, 25.0
- Electronics: DAE4 Sn1496; Calibrated: 2016-12-06
- Phantom: ELI v5.0 (30deg probe tilt); Type: QDOVA002AA;
- DASY52 52.8.8(1222);

Wlan/DTS_802.11b_CH6-2437MHz_Back_Aux/Area Scan (51x71x1): Interpolated grid: dx=1.200 mm, dy=1.200 mm
Maximum value of SAR (interpolated) = 0.773 W/kg

Wlan/DTS_802.11b_CH6-2437MHz_Back_Aux/Zoom Scan (7x7x7)/Cube 0: Measurement grid: dx=5mm, dy=5mm, dz=5mm
Reference Value = 17.66 V/m; Power Drift = -0.07 dB
Peak SAR (extrapolated) = 1.32 W/kg
SAR(1 g) = 0.571 W/kg; SAR(10 g) = 0.236 W/kg (SAR corrected for target medium)
Maximum value of SAR (measured) = 0.658 W/kg

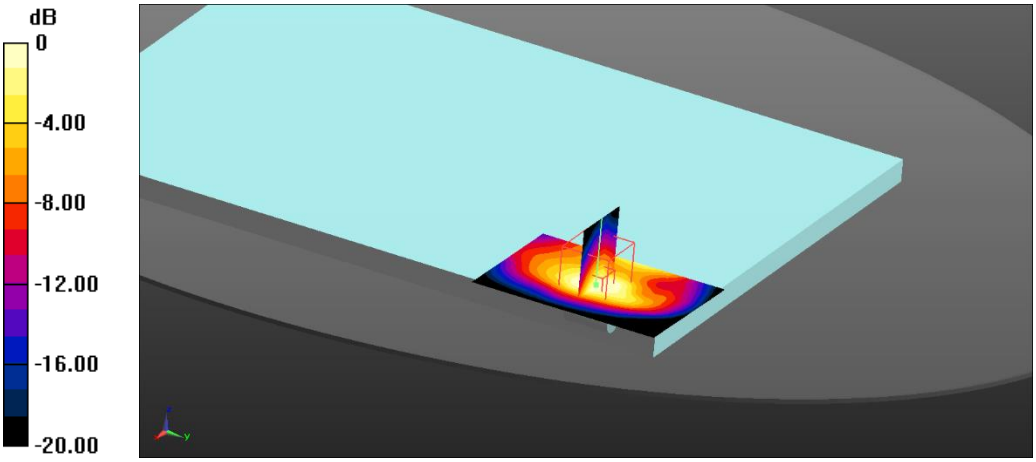

0 dB = 0.658 W/kg = -1.82 dBW/kg

Printed copies are not controlled documents

3. U-NII-2A - 802.11a, CH64, Main Antenna – Top Edge

Test Laboratory: Intel WRF Lab; Date/Time: 2017-02-08 15:07:33

DUT: T17G+18265 NGW; Type: Convertible PC; Serial: 34.13.E8.5B.20.18

Communication System: UID 0, 802.11 (0); Communication System Band: 5GHz; Frequency: 5320 MHz;Communication System PAR: 0 dB
Medium parameters used: f = 5320 MHz; σ = 5.43 S/m; ε_r = 44.404; ρ = 1000 kg/m^3
Phantom section: Flat Section
Measurement Standard: DASY5 (IEEE/IEC/ANSI C63.19-2011)

DASY Configuration:

- Probe: EX3DV4 - SN7325; ConvF(4.43, 4.43, 4.43); Calibrated: 2016-12-08;
  - Modulation Compensation:
- Sensor-Surface: 2mm (Mechanical Surface Detection), z = 27.0, 25.0
- Electronics: DAE4 Sn1496; Calibrated: 2016-12-06
- Phantom: ELI v5.0 (30deg probe tilt); Type: QDOVA002AA;
- DASY52 52.8.8(1222);

Wlan-5GHz /UNII-2A_802.11a-CH64-5320MHz_Top-Edge_ChainA/Area Scan (61x91x1):
Interpolated grid: dx=1.000 mm, dy=1.000 mm
Maximum value of SAR (interpolated) = 2.41 W/kg

Wlan-5GHz/UNII-2A_802.11a-CH64-5320MHz_Top-Edge_ChainA/Zoom Scan (7x7x12)/Cube 0:
Measurement grid: dx=4mm, dy=4mm, dz=2mm
Reference Value = 20.34 V/m; Power Drift = -0.15 dB
Peak SAR (extrapolated) = 4.87 W/kg
SAR(1 g) = 1.14 W/kg; SAR(10 g) = 0.310 W/kg (SAR corrected for target medium)
Maximum value of SAR (measured) = 2.43 W/kg

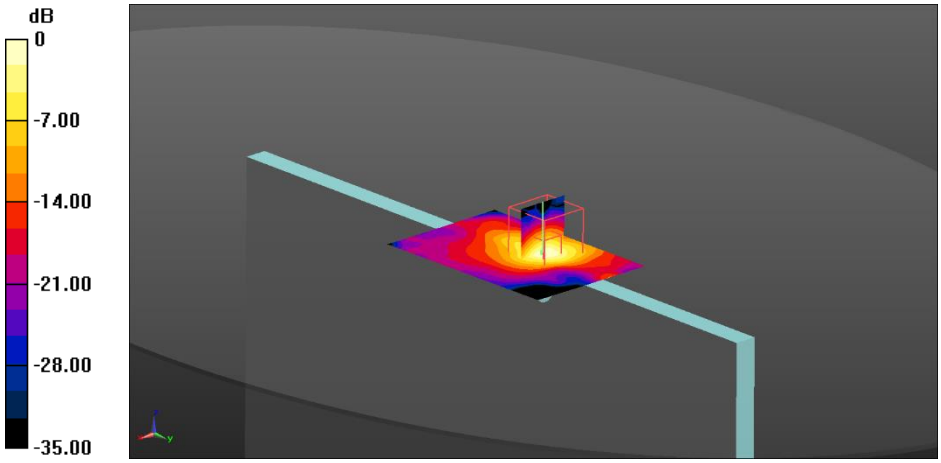

0 dB = 2.43 W/kg = 3.86 dBW/kg

Printed copies are not controlled documents

4. U-NII-2A - 802.11a, CH60, Aux Antenna – Top Edge

Test Laboratory: Intel WRF Lab; Date/Time: 2017-03-08 15:21:19

DUT: T17G+18265 NGW; Type: Convertible PC; Serial: 34.13.E8.5B.20.18

Communication System: UID 0, 802.11 (0); Communication System Band: 5GHz; Frequency: 5300 MHz;Communication System PAR: 0 dB
Medium parameters used: f = 5300 MHz; σ = 5.486 S/m; ε_r = 45.288; ρ = 1000 kg/m^3
Phantom section: Flat Section
Measurement Standard: DASY5 (IEEE/IEC/ANSI C63.19-2011)

DASY Configuration:

- Probe: EX3DV4 - SN7325; ConvF(4.43, 4.43, 4.43); Calibrated: 2016-12-08;
  - Modulation Compensation:
- Sensor-Surface: 2mm (Mechanical Surface Detection (Locations From Previous Scan Used)), Sensor-Surface: 2mm (Mechanical Surface Detection), z = -4.0, 25.0
- Electronics: DAE4 Sn1496; Calibrated: 2016-12-06
- Phantom: ELI v5.0 (30deg probe tilt); Type: QDOVA002AA;
- DASY52 52.8.8(1222);

Wlan /UNII-2A_802.11a-CH60-5300MHz_Top-Edge_Aux/Area Scan (51x91x1): Interpolated grid: dx=1.000 mm, dy=1.000 mm
Maximum value of SAR (interpolated) = 1.38 W/kg

Wlan /UNII-2A_802.11a-CH60-5300MHz_Top-Edge_Aux/Zoom Scan (7x7x12)/Cube 0:
Measurement grid: dx=4mm, dy=4mm, dz=2mm
Reference Value = 15.12 V/m; Power Drift = 0.18 dB
Peak SAR (extrapolated) = 3.26 W/kg
SAR(1 g) = 0.804 W/kg; SAR(10 g) = 0.254 W/kg (SAR corrected for target medium)

Maximum value of SAR (measured) = 1.59 W/kg

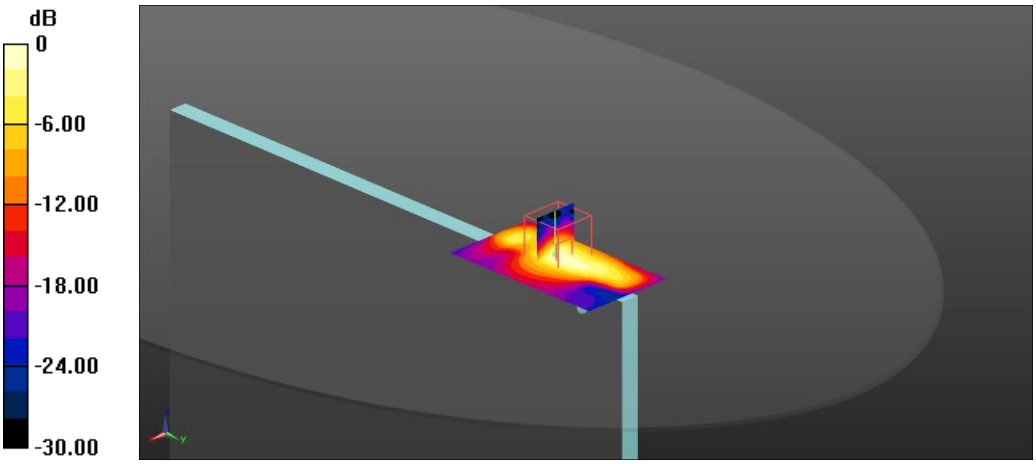

0 dB = 1.59 W/kg = 2.01 dBW/kg

Printed copies are not controlled documents

5. U-NII-2C - 802.11a, CH124, Main Antenna – Top Edge

Test Laboratory: Intel WRF Lab; Date/Time: 2017-02-09 15:20:37

DUT: T17G+18265 NGW; Type: Convertible PC; Serial: 34.13.E8.5B.20.18

Communication System: UID 0, 802.11 (0); Communication System Band: 5GHz; Frequency: 5620 MHz;Communication System PAR: 0 dB
Medium parameters used: f = 5620 MHz; σ = 5.819 S/m; ε_r = 43.849; ρ = 1000 kg/m^3
Phantom section: Flat Section
Measurement Standard: DASY5 (IEEE/IEC/ANSI C63.19-2011)

DASY Configuration:

- Probe: EX3DV4 - SN7325; ConvF(3.91, 3.91, 3.91); Calibrated: 2016-12-08;
  - Modulation Compensation:
- Sensor-Surface: 2mm (Mechanical Surface Detection (Locations From Previous Scan Used)), Sensor-Surface: 2mm (Mechanical Surface Detection), z = 27.0, 25.0
- Electronics: DAE4 Sn1496; Calibrated: 2016-12-06
- Phantom: ELI v5.0 (30deg probe tilt); Type: QDOVA002AA;
- DASY52 52.8.8(1222);

Wlan-5GHz-TopEdge Chain A /UNII-2C_802.11a-CH124-5620MHz_Top-Edge_ChainA/Area Scan (61x91x1): Interpolated grid: dx=1.000 mm, dy=1.000 mm
Maximum value of SAR (interpolated) = 1.84 W/kg

Wlan-5GHz-TopEdge Chain A/UNII-2C_802.11a-CH124-5620MHz_Top-Edge_ChainA/Zoom Scan (7x7x12)/Cube 0: Measurement grid: dx=4mm, dy=4mm, dz=2mm
Reference Value = 19.08 V/m; Power Drift = -0.07 dB
Peak SAR (extrapolated) = 3.73 W/kg
SAR(1 g) = 0.872 W/kg; SAR(10 g) = 0.254 W/kg (SAR corrected for target medium)
Maximum value of SAR (measured) = 1.84 W/kg

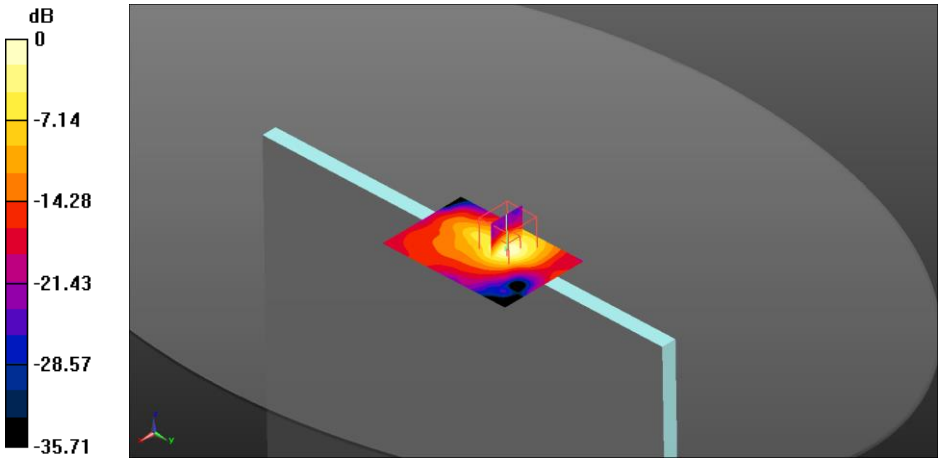

0 dB = 1.84 W/kg = 2.65 dBW/kg

Printed copies are not controlled documents

6. U-NII-2C - 802.11a, CH128, Aux Antenna – Top Edge

Test Laboratory: Intel WRF Lab; Date/Time: 2017-02-28 16:49:30

DUT: T17G+18265 NGW; Type: Convertible PC; Serial: 34.13.E8.5B.20.18

Communication System: UID 0, 802.11 (0); Communication System Band: 5GHz; Frequency: 5640 MHz;Communication System PAR: 0 dB
Medium parameters used: f = 5640 MHz; σ = 5.934 S/m; ε_r = 44.004; ρ = 1000 kg/m^3
Phantom section: Flat Section
Measurement Standard: DASY5 (IEEE/IEC/ANSI C63.19-2011)

DASY Configuration:

- Probe: EX3DV4 - SN7325; ConvF(3.91, 3.91, 3.91); Calibrated: 2016-12-08;
  - Modulation Compensation:
- Sensor-Surface: 2mm (Mechanical Surface Detection (Locations From Previous Scan Used)), Sensor-Surface: 2mm (Mechanical Surface Detection), z = -4.0, 25.0
- Electronics: DAE4 Sn1496; Calibrated: 2016-12-06
- Phantom: ELI v5.0 (30deg probe tilt); Type: QDOVA002AA;
- DASY52 52.8.8(1222);

Wlan-5GHz /UNII-2C_802.11a-CH128-5640MHz_Top-Edge_Aux/Area Scan 2 (51x91x1):
Interpolated grid: dx=1.000 mm, dy=1.000 mm
Maximum value of SAR (interpolated) = 2.46 W/kg

Wlan-5GHz /UNII-2C_802.11a-CH128-5640MHz_Top-Edge_Aux/Zoom Scan (7x7x12)/Cube 0:
Measurement grid: dx=4mm, dy=4mm, dz=2mm
Reference Value = 21.08 V/m; Power Drift = 0.17 dB
Peak SAR (extrapolated) = 6.24 W/kg
SAR(1 g) = 1.38 W/kg; SAR(10 g) = 0.400 W/kg (SAR corrected for target medium)
Maximum value of SAR (measured) = 2.83 W/kg

Wlan-5GHz /U-NII-2C_802.11a-CH128-5640MHz_Top-Edge_Aux/Zoom Scan (7x7x12)/Cube 1:
Measurement grid: dx=4mm, dy=4mm, dz=2mm
Reference Value = 21.08 V/m; Power Drift = 0.17 dB
Peak SAR (extrapolated) = 4.00 W/kg
SAR(1 g) = 0.901 W/kg; SAR(10 g) = 0.300 W/kg (SAR corrected for target medium)
Maximum value of SAR (measured) = 1.84 W/kg

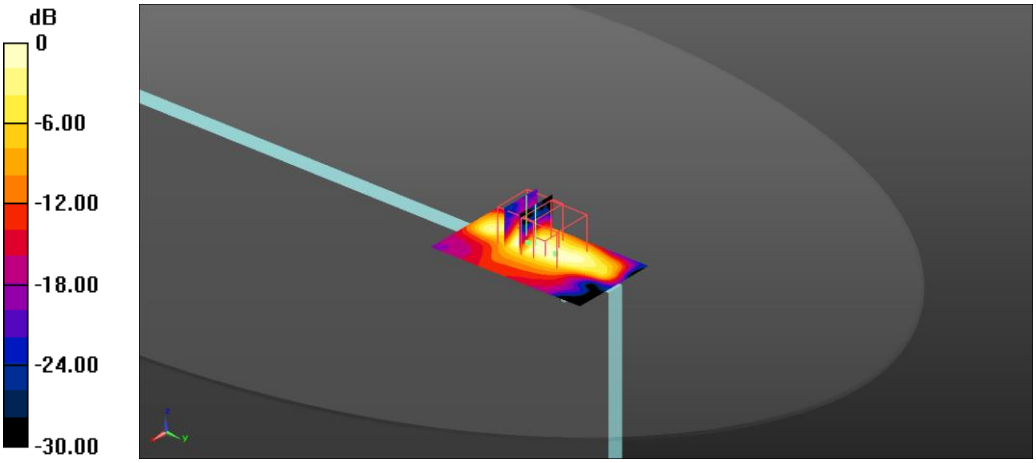

0 dB = 1.84 W/kg = 2.65 dBW/kg

Printed copies are not controlled documents

7. U-NII-3 - 802.11n20 (MIMO), CH132, Main Antenna – Top Edge

Test Laboratory: Intel WRF Lab; Date/Time: 2017-03-07 16:17:31

DUT: T17G+18265 NGW; Type: Convertible PC; Serial: 34.13.E8.5B.20.18

Communication System: UID 0, 802.11 (0); Communication System Band: 5GHz; Frequency: 5660 MHz;Communication System PAR: 0 dB
Medium parameters used: f = 5660 MHz; σ = 5.975 S/m; ε_r = 44.563; ρ = 1000 kg/m^3
Phantom section: Flat Section
Measurement Standard: DASY5 (IEEE/IEC/ANSI C63.19-2011)

DASY Configuration:

- Probe: EX3DV4 - SN7325; ConvF(3.91, 3.91, 3.91); Calibrated: 2016-12-08;
  - Modulation Compensation:
- Sensor-Surface: 2mm (Mechanical Surface Detection), z = 27.0, 25.0
- Electronics: DAE4 Sn1496; Calibrated: 2016-12-06
- Phantom: ELI v5.0 (30deg probe tilt); Type: QDOVA002AA;
- DASY52 52.8.8(1222);

Wlan-5GHz/U-NII-2C_802.11n20-CH132-5660MHz_Top-Edge_Main/Area Scan (61x91x1):
Interpolated grid: dx=1.000 mm, dy=1.000 mm
Maximum value of SAR (interpolated) = 1.43 W/kg

Wlan-5GHz/U-NII-2C_802.11n20-CH132-5660MHz_Top-Edge_Main/Zoom Scan (7x7x12)/Cube 0:
Measurement grid: dx=4mm, dy=4mm, dz=2mm
Reference Value = 17.82 V/m; Power Drift = 0.01 dB
Peak SAR (extrapolated) = 3.52 W/kg
SAR(1 g) = 0.760 W/kg; SAR(10 g) = 0.212 W/kg (SAR corrected for target medium)
Maximum value of SAR (measured) = 1.61 W/kg

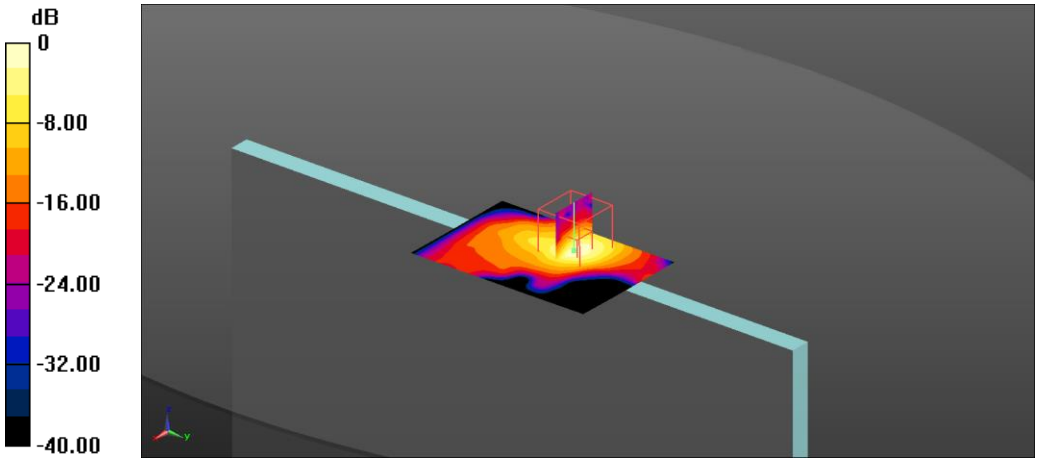

0 dB = 1.61 W/kg = 2.07 dBW/kg

Printed copies are not controlled documents

8. U-NII-3 - 802.11a, CH132, Aux Antenna – Top Edge

Test Laboratory: Intel WRF Lab; Date/Time: 2017-03-07 13:55:00

DUT: T17G+18265 NGW; Type: Convertible PC; Serial: 34.13.E8.5B.20.18

Communication System: UID 0, 802.11 (0); Communication System Band: 5GHz; Frequency: 5660 MHz;Communication System PAR: 0 dB
Medium parameters used: f = 5660 MHz; σ = 5.975 S/m; ε_r = 44.563; ρ = 1000 kg/m^3
Phantom section: Flat Section
Measurement Standard: DASY5 (IEEE/IEC/ANSI C63.19-2011)

DASY Configuration:

- Probe: EX3DV4 - SN7325; ConvF(3.91, 3.91, 3.91); Calibrated: 2016-12-08;
  - Modulation Compensation:
- Sensor-Surface: 2mm (Mechanical Surface Detection), z = -4.0, 25.0
- Electronics: DAE4 Sn1496; Calibrated: 2016-12-06
- Phantom: ELI v5.0 (30deg probe tilt); Type: QDOVA002AA;
- DASY52 52.8.8(1222);

Wlan 5GHz / U-NII-3_802.11a-CH132-5660MHz_Top-Edge_Aux/Area Scan (51x91x1): Interpolated grid: dx=1.000 mm, dy=1.000 mm
Maximum value of SAR (interpolated) = 2.82 W/kg

Wlan 5GHz / U-NII-3_802.11a-CH132-5660MHz_Top-Edge_Aux/Zoom Scan (7x7x12)/Cube 0:
Measurement grid: dx=4mm, dy=4mm, dz=2mm
Reference Value = 21.00 V/m; Power Drift = 0.01 dB
Peak SAR (extrapolated) = 7.12 W/kg
SAR(1 g) = 1.51 W/kg; SAR(10 g) = 0.423 W/kg (SAR corrected for target medium)
Maximum value of SAR (measured) = 3.23 W/kg

Wlan 5GHz / U-NII-3_802.11a-CH132-5660MHz_Top-Edge_Aux/Zoom Scan (7x7x12)/Cube 1:
Measurement grid: dx=4mm, dy=4mm, dz=2mm
Reference Value = 21.00 V/m; Power Drift = 0.01 dB
Peak SAR (extrapolated) = 4.84 W/kg
SAR(1 g) = 1.04 W/kg; SAR(10 g) = 0.346 W/kg (SAR corrected for target medium)
Maximum value of SAR (measured) = 2.28 W/kg

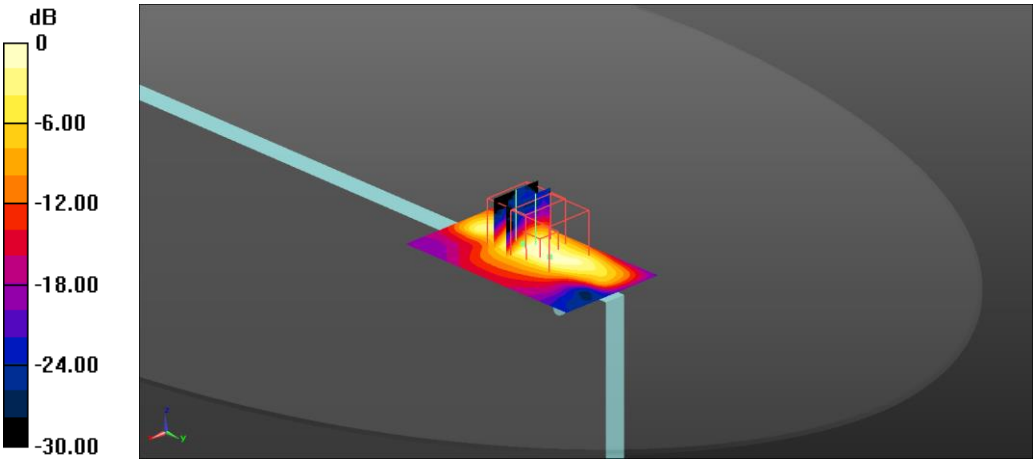

0 dB = 2.28 W/kg = 3.58 dBW/kg

Printed copies are not controlled documents

9. BT - 802.15, CH39, Aux Antenna – Back Face

Test Laboratory: Intel WRF Lab; Date/Time: 2017-02-09 18:29:04

DUT: T17G+18265 NGW; Type: Convertible PC; Serial: 34.13.E8.5B.20.1C

Communication System: UID 0, 802.15 (0); Communication System Band: 2.4GHZ; Frequency: 2441 MHz;Communication System PAR: 1.133 dB
Medium parameters used (interpolated): f = 2441 MHz; σ = 2.064 S/m; ε_r = 49.613 ρ = 1000 kg/m^3
Phantom section: Flat Section
Measurement Standard: DASY5 (IEEE/IEC/ANSI C63.19-2011)

DASY Configuration:

- Probe: EX3DV4 - SN7325; ConvF(7.53, 7.53, 7.53); Calibrated: 2016-12-08;
  - Modulation Compensation:
- Sensor-Surface: 4mm (Mechanical Surface Detection), z = -29.0, 25.0
- Electronics: DAE4 Sn1496; Calibrated: 2016-12-06
- Phantom: ELI v5.0 (30deg probe tilt); Type: QDOVA002AA;
- DASY52 52.8.8(1222);

Wlan-2GHz/BT_802.15_CH39-2441MHz__Back_Aux/Area Scan (61x71x1): Interpolated grid: dx=1.200 mm, dy=1.200 mm
Maximum value of SAR (interpolated) = 0.167 W/kg

Wlan-2GHz/BT_802.15_CH39-2441MHz__Back_Aux/Zoom Scan (61x71x1): Measurement grid: dx=5mm, dy=5mm, dz=5mm
Reference Value = 8.435 V/m; Power Drift = -0.00 dB
Peak SAR (extrapolated) = 0.330 W/kg
SAR(1 g) = 0.150 W/kg; SAR(10 g) = 0.064 W/kg (SAR corrected for target medium)

Maximum value of SAR (measured) = 0.170 W/kg

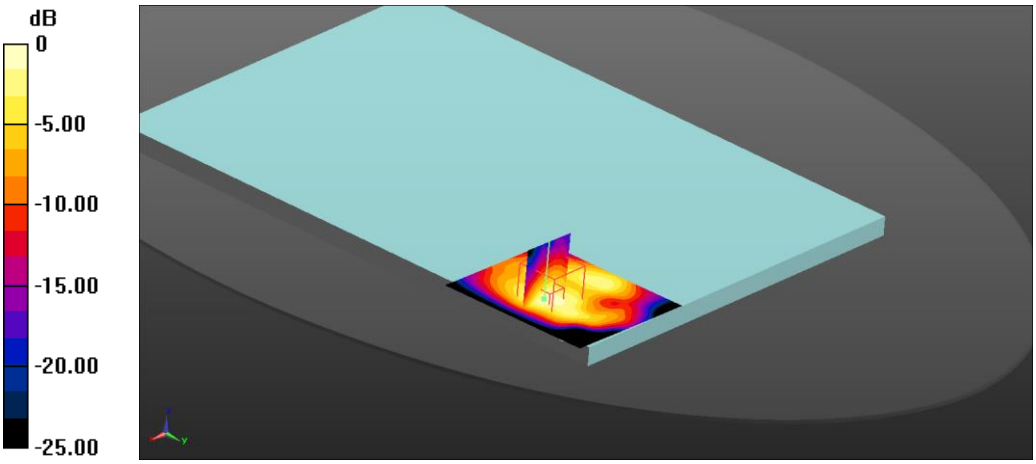

0 dB = 0.170 W/kg = -7.70 dBW/kg

Printed copies are not controlled documents

10. System Check Body Liquid 2450MHz

Test Laboratory: Intel WRF Lab; Date/Time: 2017-02-09 10:09:19

DUT: Dipole 2450 MHz D2450V2; Type: D2450V2; Serial: D2450V2 - SN:937

Communication System: UID 0, CW (0); Communication System Band: D2450 (2450.0 MHz);
Frequency: 2450 MHz;Communication System PAR: 0 dB
Medium parameters used: f = 2450 MHz; σ = 2.072 S/m; ε_r = 49.596; ρ = 1000 kg/m^3
Phantom section: Flat Section
Measurement Standard: DASY5 (IEEE/IEC/ANSI C63.19-2011)

DASY Configuration:

- Probe: EX3DV4 - SN7325; ConvF(7.53, 7.53, 7.53); Calibrated: 2016-12-08;
  - Modulation Compensation:
- Sensor-Surface: 4mm (Mechanical Surface Detection), z = -14.0, 31.0
- Electronics: DAE4 Sn1496; Calibrated: 2016-12-06
- Phantom: ELI v5.0 (30deg probe tilt); Type: QDOVA002AA;
- DASY52 52.8.8(1222);

WLAN-2.4GHz /System check 2450MHz/Area Scan (81x81x1): Interpolated grid: dx=1.200 mm, dy=1.200 mm
Maximum value of SAR (interpolated) = 5.84 W/kg

WLAN-2.4GHz /System check 2450MHz/Zoom Scan (7x7x7)/Cube 0: Measurement grid: dx=5mm, dy=5mm, dz=5mm
Reference Value = 53.47 V/m; Power Drift = -0.04 dB
Peak SAR (extrapolated) = 10.3 W/kg
SAR(1 g) = 5.03 W/kg; SAR(10 g) = 2.32 W/kg (SAR corrected for target medium)
Maximum value of SAR (measured) = 5.78 W/kg

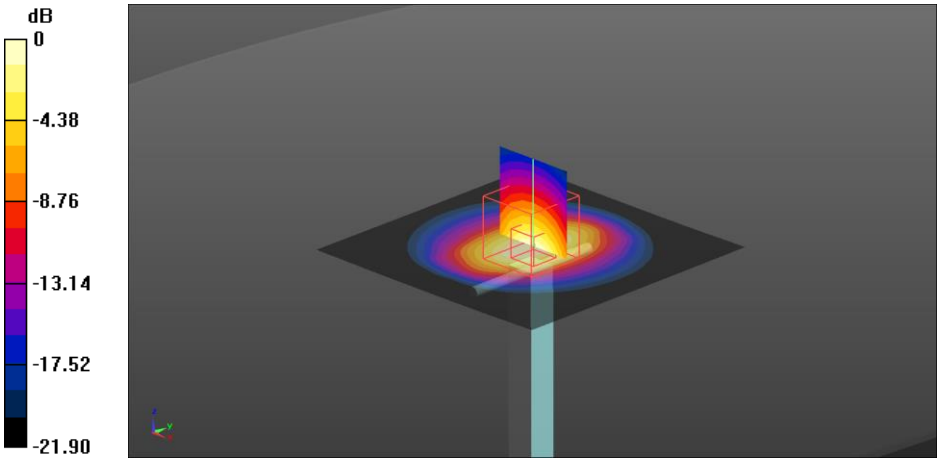

0 dB = 5.78 W/kg = 7.62 dBW/kg

Printed copies are not controlled documents

11. System Check Body Liquid 5300MHz

Test Laboratory: Intel WRF Lab; Date/Time: 2017-02-08 18:48:19

DUT: Dipole D5GHzV2; Type: D5GHzV2; Serial: D5GHzV2 - SN:1164

Communication System: UID 0, CW (0); Communication System Band: D5GHz (5000.0 - 6000.0 MHz); Frequency: 5300 MHz;Communication System PAR: 0 dB
Medium parameters used: f = 5300 MHz; σ = 5.404 S/m; ε_r = 44.442; ρ = 1000 kg/m^3
Phantom section: Flat Section
Measurement Standard: DASY5 (IEEE/IEC/ANSI C63.19-2011)

DASY Configuration:

- Probe: EX3DV4 - SN7325; ConvF(4.43, 4.43, 4.43); Calibrated: 2016-12-08;
  - Modulation Compensation:
- Sensor-Surface: 2mm (Mechanical Surface Detection), z = 1.0, 27.0
- Electronics: DAE4 Sn1496; Calibrated: 2016-12-06
- Phantom: ELI v5.0 (30deg probe tilt); Type: QDOVA002AA;
- DASY52 52.8.8(1222);

WLAN-5GHz/System check 5300MHz/Area Scan (81x81x1): Interpolated grid: dx=1.000 mm, dy=1.000 mm
Maximum value of SAR (interpolated) = 16.7 W/kg

WLAN-5GHz/System check 5300MHz/Zoom Scan (7x7x12)/Cube 0: Measurement grid: dx=4mm, dy=4mm, dz=2mm
Reference Value = 60.45 V/m; Power Drift = -0.05 dB
Peak SAR (extrapolated) = 33.7 W/kg
SAR(1 g) = 8.24 W/kg; SAR(10 g) = 2.33 W/kg (SAR corrected for target medium)
Maximum value of SAR (measured) = 17.3 W/kg

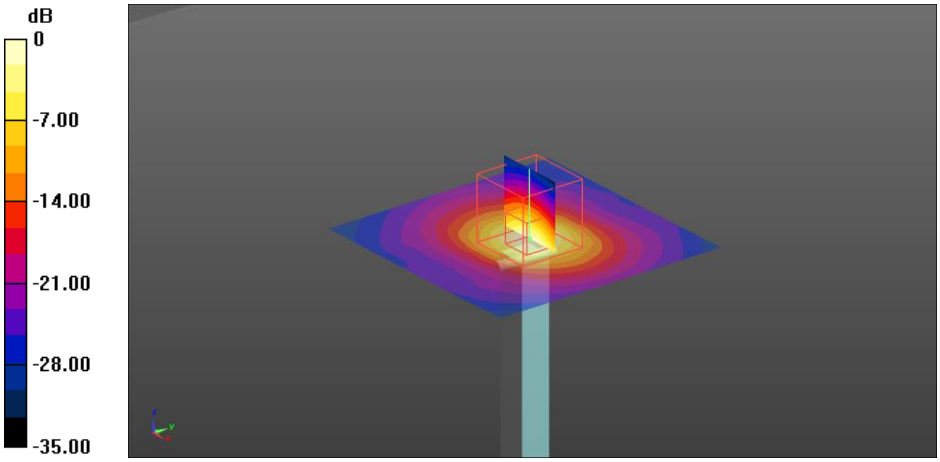

0 dB = 17.3 W/kg = 12.38 dBW/kg

Printed copies are not controlled documents

12. System Check Body Liquid 5300MHz (2)

Test Laboratory: Intel WRF Lab; Date/Time: 2017-03-08 12:49:28

DUT: Dipole D5GHzV2; Type: D5GHzV2; Serial: D5GHzV2 - SN:1164

Communication System: UID 0, CW (0); Communication System Band: D5GHz (5000.0 - 6000.0 MHz); Frequency: 5300 MHz;Communication System PAR: 0 dB
Medium parameters used: f = 5300 MHz; σ = 5.486 S/m; ε_r = 45.288; ρ = 1000 kg/m^3
Phantom section: Flat Section
Measurement Standard: DASY5 (IEEE/IEC/ANSI C63.19-2011)

DASY Configuration:

- Probe: EX3DV4 - SN7325; ConvF(4.43, 4.43, 4.43); Calibrated: 2016-12-08;
  - Modulation Compensation:
- Sensor-Surface: 2mm (Mechanical Surface Detection), z = 1.0, 27.0
- Electronics: DAE4 Sn1496; Calibrated: 2016-12-06
- Phantom: ELI v5.0 (30deg probe tilt); Type: QDOVA002AA;
- DASY52 52.8.8(1222);

WLAN-5GHz_2017-03-07/System check 5300MHz 2/Area Scan (81x81x1): Interpolated grid: dx=1.000 mm, dy=1.000 mm
Maximum value of SAR (interpolated) = 15.5 W/kg

WLAN-5GHz_2017-03-07/System check 5300MHz 2/Zoom Scan (7x7x12)/Cube 0: Measurement grid: dx=4mm, dy=4mm, dz=2mm
Reference Value = 57.87 V/m; Power Drift = -0.09 dB
Peak SAR (extrapolated) = 33.8 W/kg
SAR(1 g) = 7.75 W/kg; SAR(10 g) = 2.19 W/kg (SAR corrected for target medium)
Maximum value of SAR (measured) = 16.3 W/kg

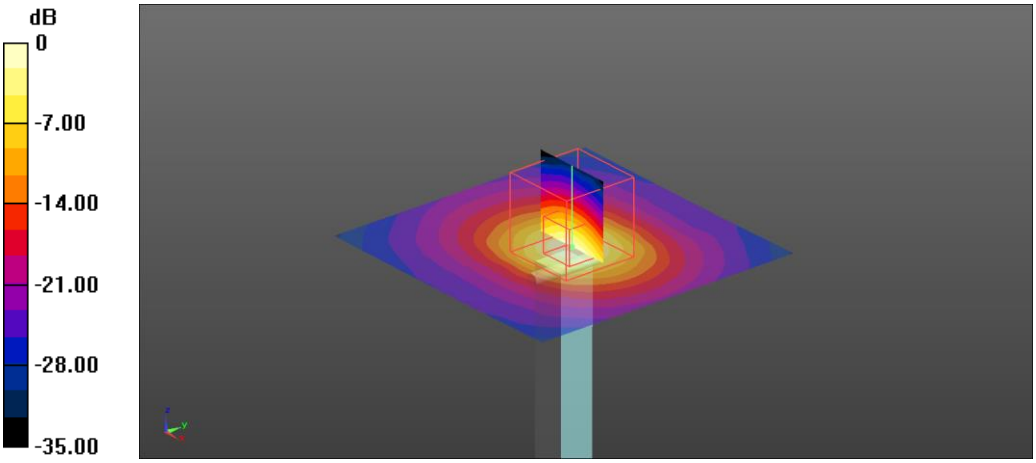

0 dB = 16.3 W/kg = 12.12 dBW/kg

Printed copies are not controlled documents

13. System Check Body Liquid 5500MHz

Test Laboratory: Intel WRF Lab; Date/Time: 2017-02-09 14:56:52

DUT: Dipole D5GHzV2; Type: D5GHzV2; Serial: D5GHzV2 - SN:1164

Communication System: UID 0, CW (0); Communication System Band: D5GHz (5000.0 - 6000.0 MHz); Frequency: 5500 MHz;Communication System PAR: 0 dB
Medium parameters used: f = 5500 MHz; σ = 5.667 S/m; ε_r = 44.057; ρ = 1000 kg/m^3
Phantom section: Flat Section
Measurement Standard: DASY5 (IEEE/IEC/ANSI C63.19-2011)

DASY Configuration:

- Probe: EX3DV4 - SN7325; ConvF(4.07, 4.07, 4.07); Calibrated: 2016-12-08;
  - Modulation Compensation:
- Sensor-Surface: 2mm (Mechanical Surface Detection), z = 1.0, 27.0
- Electronics: DAE4 Sn1496; Calibrated: 2016-12-06
- Phantom: ELI v5.0 (30deg probe tilt); Type: QDOVA002AA;
- DASY52 52.8.8(1222);

WLAN-5GHz/System check 5500MHz/Area Scan (81x81x1): Interpolated grid: dx=1.000 mm, dy=1.000 mm
Maximum value of SAR (interpolated) = 16.9 W/kg

WLAN-5GHz/System check 5500MHz/Zoom Scan (7x7x12)/Cube 0: Measurement grid: dx=4mm, dy=4mm, dz=2mm
Reference Value = 60.00 V/m; Power Drift = 0.07 dB
Peak SAR (extrapolated) = 34.5 W/kg
SAR(1 g) = 8.1 W/kg; SAR(10 g) = 2.27 W/kg (SAR corrected for target medium)
Maximum value of SAR (measured) = 17.2 W/kg

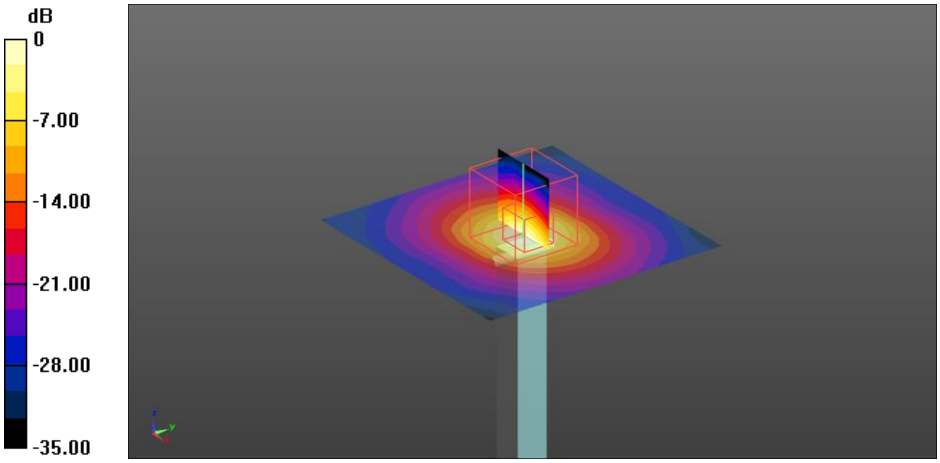

0 dB = 17.2 W/kg = 12.36 dBW/kg

Printed copies are not controlled documents

14. System Check Body Liquid 5600MHz

Test Laboratory: Intel WRF Lab; Date/Time: 2017-02-09 16:36:49

DUT: Dipole D5GHzV2; Type: D5GHzV2; Serial: D5GHzV2 - SN:1164

Communication System: UID 0, CW (0); Communication System Band: D5GHz (5000.0 - 6000.0 MHz); Frequency: 5600 MHz;Communication System PAR: 0 dB
Medium parameters used: f = 5600 MHz; σ = 5.792 S/m; ε_r = 43.877; ρ = 1000 kg/m^3
Phantom section: Flat Section
Measurement Standard: DASY5 (IEEE/IEC/ANSI C63.19-2011)

DASY Configuration:

- Probe: EX3DV4 - SN7325; ConvF(3.91, 3.91, 3.91); Calibrated: 2016-12-08;
  - Modulation Compensation:
- Sensor-Surface: 2mm (Mechanical Surface Detection (Locations From Previous Scan Used)), Sensor-Surface: 2mm (Mechanical Surface Detection), z = 1.0, 27.0
- Electronics: DAE4 Sn1496; Calibrated: 2016-12-06
- Phantom: ELI v5.0 (30deg probe tilt); Type: QDOVA002AA;
- DASY52 52.8.8(1222);

WLAN-5GHz/System check 5600MHz/Area Scan (81x81x1): Interpolated grid: dx=1.000 mm, dy=1.000 mm
Maximum value of SAR (interpolated) = 15.4 W/kg

WLAN-5GHz/System check 5600MHz/Zoom Scan (7x7x12)/Cube 0: Measurement grid: dx=4mm, dy=4mm, dz=2mm
Reference Value = 61.21 V/m; Power Drift = -0.09 dB
Peak SAR (extrapolated) = 36.7 W/kg
SAR(1 g) = 8.32 W/kg; SAR(10 g) = 2.36 W/kg (SAR corrected for target medium)
Maximum value of SAR (measured) = 17.7 W/kg

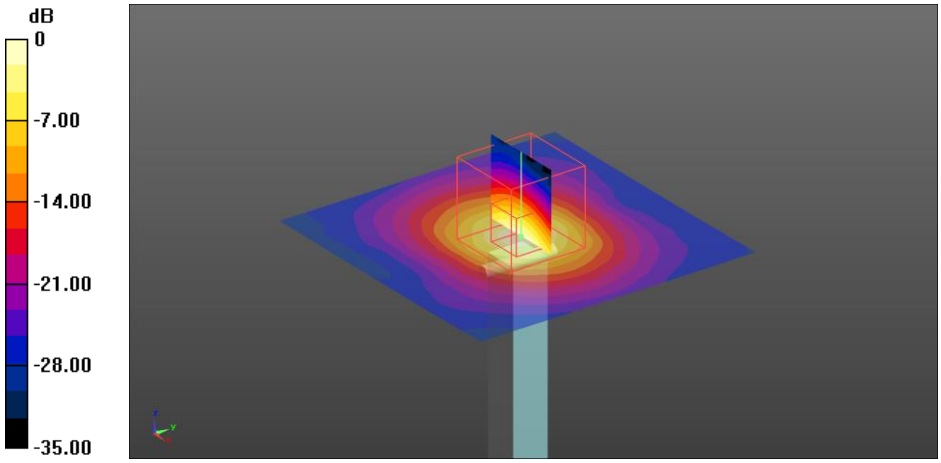

0 dB = 17.7 W/kg = 12.48 dBW/kg

Printed copies are not controlled documents

15. System Check Body Liquid 5600MHz (2)

Test Laboratory: Intel WRF Lab; Date/Time: 2017-02-28 19:44:42

DUT: Dipole D5GHzV2; Type: D5GHzV2; Serial: D5GHzV2 - SN:1164

Communication System: UID 0, CW (0); Communication System Band: D5GHz (5000.0 - 6000.0 MHz); Frequency: 5600 MHz;Communication System PAR: 0 dB
Medium parameters used: f = 5600 MHz; σ = 5.88 S/m; ε_r = 44.074; ρ = 1000 kg/m^3
Phantom section: Flat Section
Measurement Standard: DASY5 (IEEE/IEC/ANSI C63.19-2011)

DASY Configuration:

- Probe: EX3DV4 - SN7325; ConvF(3.91, 3.91, 3.91); Calibrated: 2016-12-08;
  - Modulation Compensation:
- Sensor-Surface: 2mm (Mechanical Surface Detection), z = 1.0, 27.0
- Electronics: DAE4 Sn1496; Calibrated: 2016-12-06
- Phantom: ELI v5.0 (30deg probe tilt); Type: QDOVA002AA;
- DASY52 52.8.8(1222);

WLAN-5GHz/System check 5600MHz/Area Scan (81x81x1): Interpolated grid: dx=1.000 mm, dy=1.000 mm
Maximum value of SAR (interpolated) = 17.9 W/kg

WLAN-5GHz/System check 5600MHz/Zoom Scan (7x7x12)/Cube 0: Measurement grid: dx=4mm, dy=4mm, dz=2mm
Reference Value = 62.53 V/m; Power Drift = -0.21 dB
Peak SAR (extrapolated) = 37.8 W/kg
SAR(1 g) = 8.51 W/kg; SAR(10 g) = 2.4 W/kg (SAR corrected for target medium)
Maximum value of SAR (measured) = 18.0 W/kg

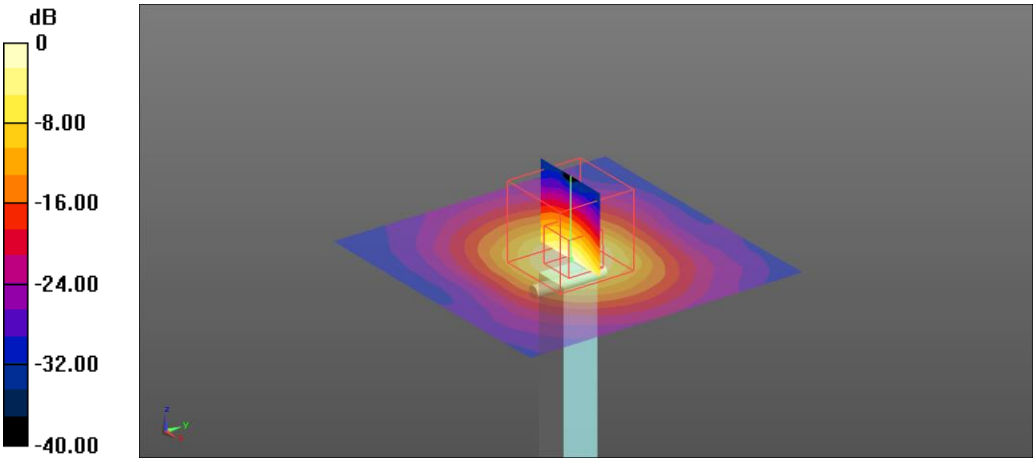

0 dB = 18.0 W/kg = 12.55 dBW/kg

Printed copies are not controlled documents

16. System Check Body Liquid 5600MHz (3)

Test Laboratory: Intel WRF Lab; Date/Time: 2017-03-07 17:58:30

DUT: Dipole D5GHzV2; Type: D5GHzV2; Serial: D5GHzV2 - SN:1164

Communication System: UID 0, CW (0); Communication System Band: D5GHz (5000.0 - 6000.0 MHz); Frequency: 5600 MHz;Communication System PAR: 0 dB
Medium parameters used: f = 5600 MHz; σ = 5.894 S/m; ε_r = 44.669; ρ = 1000 kg/m^3
Phantom section: Flat Section
Measurement Standard: DASY5 (IEEE/IEC/ANSI C63.19-2011)

DASY Configuration:

- Probe: EX3DV4 - SN7325; ConvF(3.91, 3.91, 3.91); Calibrated: 2016-12-08;
  - Modulation Compensation:
- Sensor-Surface: 2mm (Mechanical Surface Detection), z = 1.0, 27.0
- Electronics: DAE4 Sn1496; Calibrated: 2016-12-06
- Phantom: ELI v5.0 (30deg probe tilt); Type: QDOVA002AA;
- DASY52 52.8.8(1222);

WLAN-5GHz/System check 5600MHz/Area Scan (81x81x1): Interpolated grid: dx=1.000 mm, dy=1.000 mm
Maximum value of SAR (interpolated) = 16.9 W/kg

WLAN-5GHz/System check 5600MHz/Zoom Scan (7x7x12)/Cube 0: Measurement grid: dx=4mm, dy=4mm, dz=2mm
Reference Value = 57.36 V/m; Power Drift = -0.04 dB
Peak SAR (extrapolated) = 35.9 W/kg
SAR(1 g) = 7.92 W/kg; SAR(10 g) = 2.26 W/kg (SAR corrected for target medium)
Maximum value of SAR (measured) = 16.8 W/kg

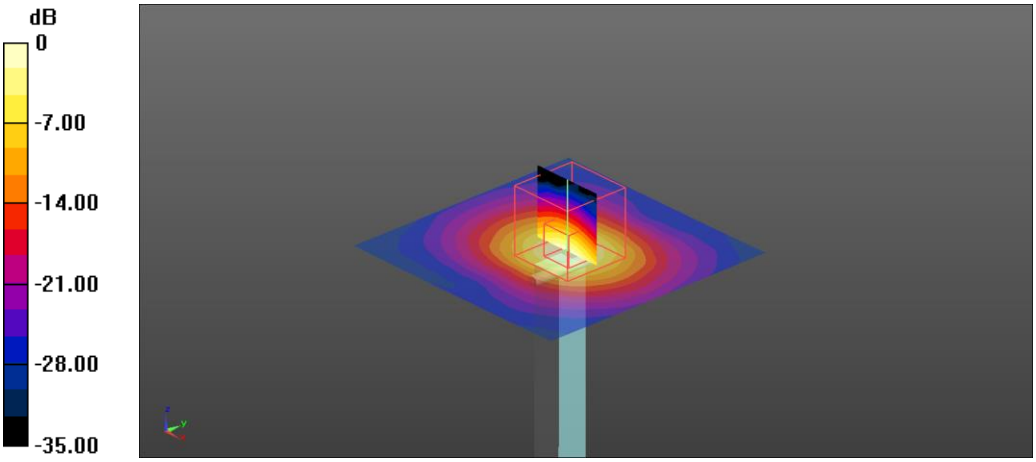

0 dB = 16.8 W/kg = 12.25 dBW/kg

Printed copies are not controlled documents

17. System Check Body Liquid 5800MHz

Test Laboratory: Intel WRF Lab; Date/Time: 2017-02-09 15:36:02

DUT: Dipole D5GHzV2; Type: D5GHzV2; Serial: D5GHzV2 - SN:1164

Communication System: UID 0, CW (0); Communication System Band: D5GHz (5000.0 - 6000.0 MHz); Frequency: 5800 MHz;Communication System PAR: 0 dB
Medium parameters used: f = 5800 MHz; σ = 6.062 S/m; ε_r = 43.529; ρ = 1000 kg/m^3
Phantom section: Flat Section
Measurement Standard: DASY5 (IEEE/IEC/ANSI C63.19-2011)

DASY Configuration:

- Probe: EX3DV4 - SN7325; ConvF(4.03, 4.03, 4.03); Calibrated: 2016-12-08;
  - Modulation Compensation:
- Sensor-Surface: 2mm (Mechanical Surface Detection (Locations From Previous Scan Used)), Sensor-Surface: 2mm (Mechanical Surface Detection), z = 1.0, 27.0
- Electronics: DAE4 Sn1496; Calibrated: 2016-12-06
- Phantom: ELI v5.0 (30deg probe tilt); Type: QDOVA002AA;
- DASY52 52.8.8(1222);

WLAN-5GHz/System check 5800MHz/Area Scan (81x81x1): Interpolated grid: dx=1.000 mm, dy=1.000 mm
Maximum value of SAR (interpolated) = 14.6 W/kg

WLAN-5GHz/System check 5800MHz/Zoom Scan (7x7x12)/Cube 0: Measurement grid: dx=4mm, dy=4mm, dz=2mm
Reference Value = 57.20 V/m; Power Drift = -0.13 dB
Peak SAR (extrapolated) = 34.8 W/kg
SAR(1 g) = 7.67 W/kg; SAR(10 g) = 2.15 W/kg (SAR corrected for target medium)
Maximum value of SAR (measured) = 16.6 W/kg

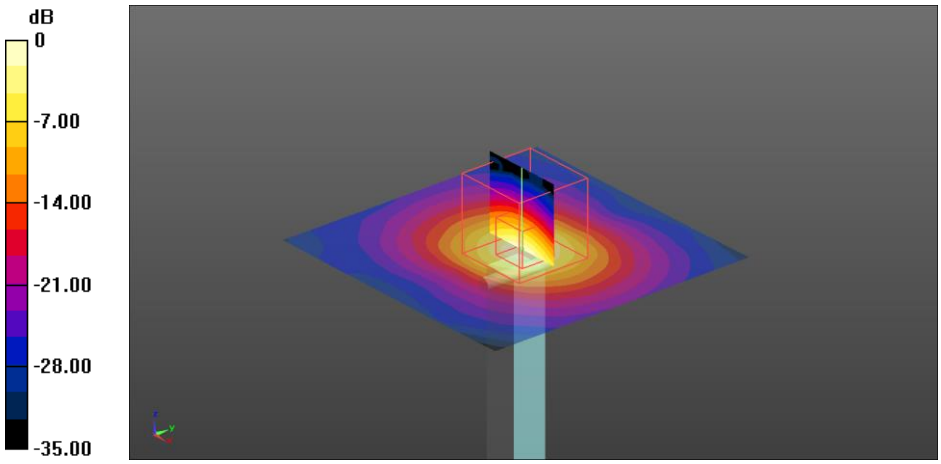

0 dB = 16.6 W/kg = 12.20 dBW/kg

Printed copies are not controlled documents

Annex D. TSL Dielectric Parameters

Body 2450MHz

Freq. (MHz)	Target		2017-02-08 Measured	
	ε'	σ	ε'	σ
2400	52.77	1.90	49.67	2.03
2410	52.75	1.91	49.66	2.04
2420	52.74	1.92	49.64	2.04
2430	52.73	1.93	49.63	2.05
2440	52.71	1.94	49.61	2.06
2450	**52.70**	**1.95**	**49.60**	**2.07**
2460	52.69	1.96	49.58	2.08
2470	52.67	1.98	49.57	2.09
2480	52.66	1.99	49.55	2.10
2490	52.65	2.01	49.54	2.11
2500	52.64	2.02	49.52	2.11

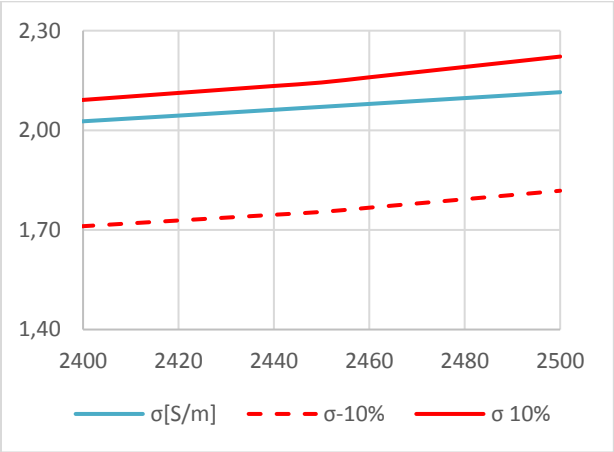

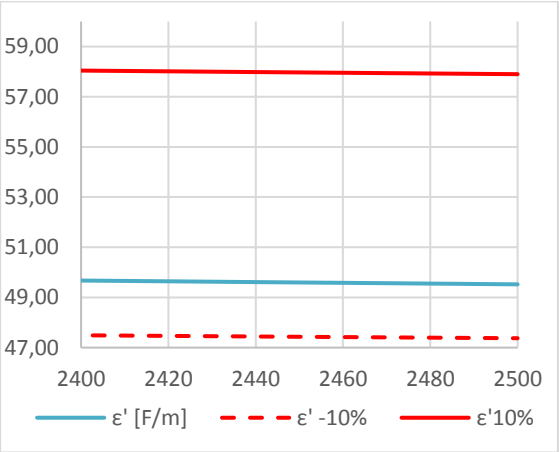

Printed copies are not controlled documents

Body U-NII-2A 5300MHz

Freq. (MHz)	Target		2017-02-08 Measured		2017-03-07 Measured	
	ε'	σ	ε'	σ	ε_2'	σ_2
5200	49.01	5.30	44.63	5.27	45.49	5.35
5210	49.00	5.31	44.61	5.28	45.47	5.37
5220	48.99	5.32	44.59	5.29	45.45	5.38
5230	48.97	5.33	44.57	5.31	45.43	5.39
5240	48.96	5.34	44.55	5.32	45.41	5.41
5250	48.95	5.36	44.53	5.34	45.39	5.42
5260	48.93	5.37	44.51	5.35	45.37	5.43
5270	48.92	5.38	44.50	5.36	45.35	5.44
5280	48.91	5.39	44.48	5.38	45.33	5.46
5290	48.89	5.40	44.46	5.39	45.31	5.47
5300	**48.88**	**5.41**	**44.44**	**5.40**	**45.29**	**5.48**
5310	48.87	5.43	44.43	5.41	45.27	5.50
5320	48.85	5.44	44.40	5.43	45.25	5.51
5330	48.84	5.45	44.38	5.44	45.23	5.52
5340	48.82	5.46	44.37	5.45	45.21	5.53
5350	48.81	5.47	44.35	5.46	45.19	5.55
5360	48.80	5.48	44.33	5.48	45.17	5.56
5370	48.78	5.50	44.31	5.49	45.15	5.58
5380	48.77	5.51	44.29	5.50	45.13	5.59
5390	48.76	5.52	44.27	5.52	45.11	5.60
5400	48.74	5.53	44.26	5.53	45.09	5.62

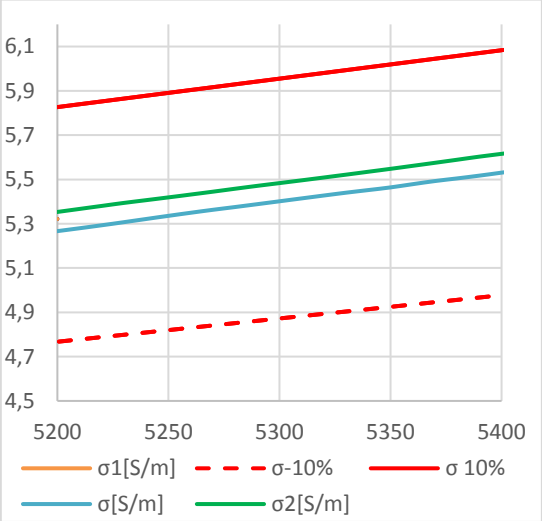

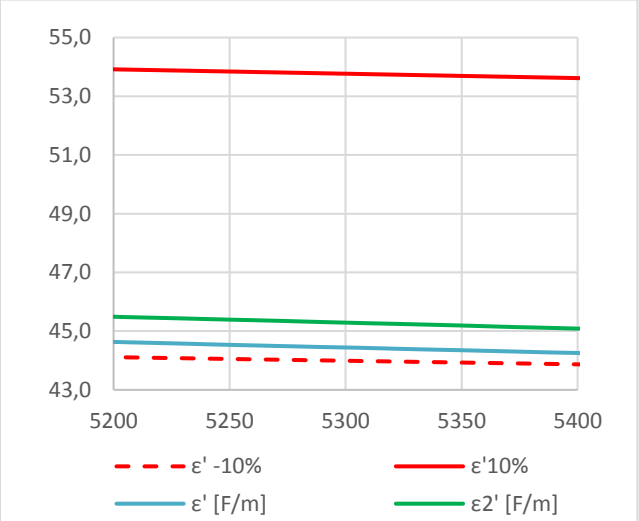

Printed copies are not controlled documents

Body U-NII-2C 5500MHz and 5600MHz

Freq. (MHz)	Target		2017-02-08 Measured		2017-02-27 Measured		2017-03-07 Measured	
	ε'	σ	ε'	σ	ε_1'	σ_1	ε_2'	σ_2
5400	48.74	5.53	44.26	5.53	44.50	5.59	45.09	5.62
5410	48.73	5.54	44.24	5.54	44.47	5.61	45.06	5.63
5420	48.72	5.55	44.22	5.56	44.46	5.62	45.04	5.64
5430	48.70	5.57	44.19	5.57	44.44	5.63	45.02	5.66
5440	48.69	5.58	44.17	5.59	44.42	5.65	45.00	5.67
5450	48.68	5.59	44.15	5.60	44.40	5.66	44.98	5.68
5460	48.66	5.60	44.13	5.61	44.38	5.68	44.96	5.70
5470	48.65	5.61	44.12	5.63	44.35	5.69	44.93	5.71
5480	48.63	5.62	44.09	5.64	44.33	5.70	44.91	5.72
5490	48.62	5.64	44.07	5.65	44.31	5.72	44.90	5.74
5500	**48.61**	**5.65**	**44.06**	**5.66**	**44.28**	**5.73**	**44.88**	**5.75**
5510	48.59	5.66	44.04	5.68	44.26	5.75	44.86	5.76
5520	48.58	5.67	44.02	5.69	44.24	5.76	44.84	5.78
5530	48.57	5.68	44.01	5.70	44.21	5.78	44.81	5.79
5540	48.55	5.69	43.99	5.71	44.19	5.79	44.79	5.81
5550	48.54	5.71	43.97	5.72	44.18	5.81	44.76	5.82
5560	48.53	5.72	43.95	5.74	44.15	5.82	44.74	5.84
5570	48.51	5.73	43.93	5.75	44.13	5.84	44.72	5.85
5580	48.50	5.74	43.91	5.76	44.11	5.85	44.70	5.87
5590	48.49	5.75	43.89	5.78	44.09	5.86	44.69	5.88
5600	**48.47**	**5.76**	**43.88**	**5.79**	**44.07**	**5.88**	**44.67**	**5.89**
5610	48.46	5.78	43.86	5.80	44.06	5.89	44.65	5.90
5620	48.44	5.79	43.85	5.82	44.04	5.90	44.63	5.92
5630	48.43	5.80	43.83	5.83	44.02	5.92	44.62	5.93
5640	48.42	5.81	43.81	5.84	44.00	5.93	44.60	5.94
5650	48.40	5.82	43.79	5.86	43.99	5.95	44.58	5.96
5660	48.39	5.83	43.78	5.87	43.97	5.96	44.56	5.97
5670	48.38	5.85	43.76	5.88	43.95	5.97	44.54	5.99
5680	48.36	5.86	43.74	5.90	43.94	5.98	44.52	6.00
5690	48.35	5.87	43.72	5.91	43.92	6.00	44.51	6.01
5700	48.34	5.88	43.71	5.92	43.90	6.01	44.49	6.03

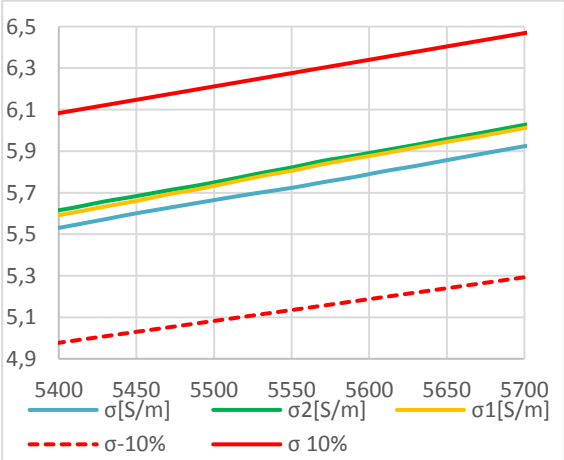

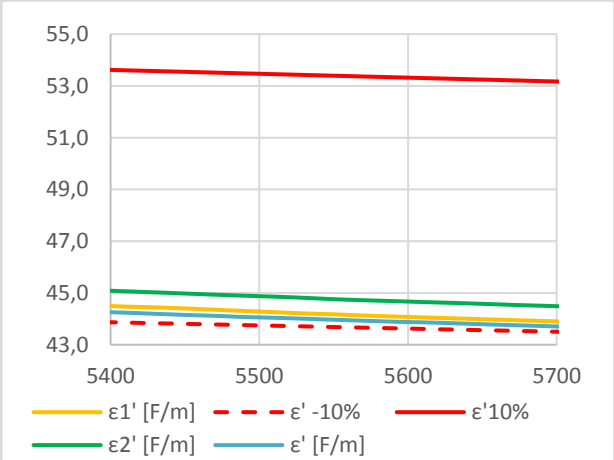

Printed copies are not controlled documents

Body U-NII-3 5800MHz

Freq. (MHz)	Target		2017-02-08 Measured		2017-02-27 Measured		2017-03-07 Measured	
	ε'	σ	ε'	σ	ε_1'	σ_1	ε_2'	σ_2
5700	48.34	5.88	43.71	5.92	43.90	6.01	44.49	6.03
5710	48.32	5.89	43.69	5.94	43.89	6.03	44.47	6.04
5720	48.31	5.90	43.67	5.95	43.87	6.04	44.45	6.05
5730	48.30	5.92	43.66	5.96	43.86	6.05	44.44	6.07
5740	48.28	5.93	43.64	5.98	43.84	6.07	44.42	6.08
5750	48.27	5.94	43.62	5.99	43.82	6.08	44.40	6.09
5760	48.25	5.95	43.60	6.01	43.80	6.09	44.38	6.11
5770	48.24	5.96	43.58	6.02	43.78	6.11	44.37	6.12
5780	48.23	5.97	43.56	6.03	43.76	6.12	44.35	6.13
5790	48.21	5.99	43.55	6.05	43.74	6.14	44.33	6.15
5800	**48.20**	**6.00**	**43.53**	**6.06**	**43.73**	**6.15**	**44.31**	**6.16**
5810	48.19	6.01	43.51	6.07	43.71	6.16	44.29	6.18
5820	48.17	6.02	43.49	6.09	43.69	6.18	44.26	6.19
5830	48.16	6.03	43.48	6.10	43.67	6.19	44.24	6.21
5840	48.15	6.04	43.46	6.11	43.65	6.21	44.22	6.22
5850	48.13	6.06	43.43	6.13	43.63	6.22	44.19	6.24
5860	48.12	6.07	43.42	6.14	43.61	6.24	44.17	6.25
5870	48.10	6.08	43.40	6.16	43.60	6.25	44.16	6.26
5880	48.09	6.09	43.38	6.17	43.58	6.27	44.14	6.27
5890	48.08	6.10	43.36	6.18	43.56	6.28	44.12	6.29
5900	48.06	6.11	43.34	6.20	43.54	6.30	44.10	6.30

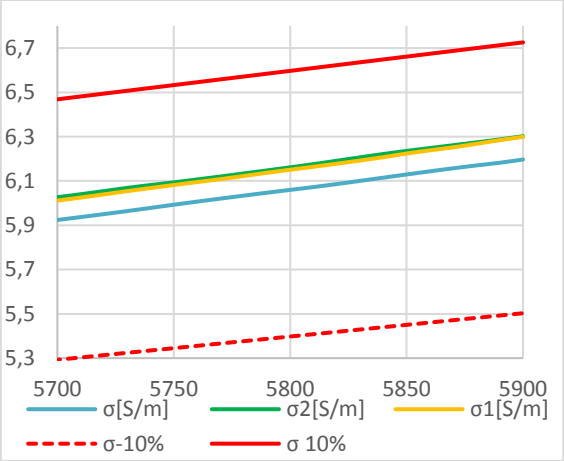

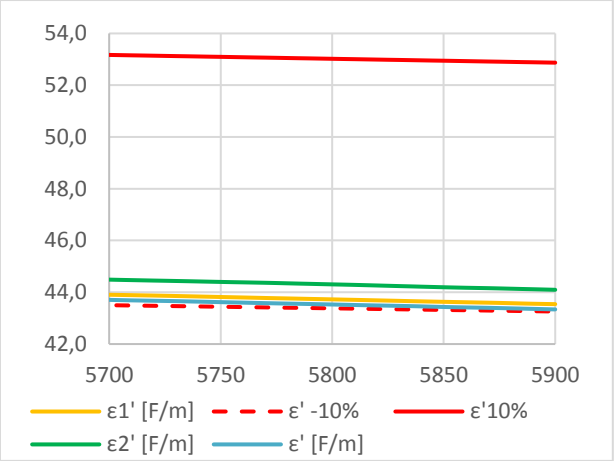

Printed copies are not controlled documents

Annex E. Calibration Certificates

ID	Device	Type/Model	Serial Number	Manufacturer	Calibration Certificate
0260	Dosimetric E-field Probe	EX3DV4	7325	SPEAG	
0239	2450MHz System Validation Dipole	D2450V2	937	SPEAG	
0124	5GHz System Validation Dipole	D5GHzv2	1164	SPEAG	

Dipole calibration

According to the KDB 865664 D01, a dipole must be calibrated using a fully validated SAR system according to the tissue dielectric parameters and SAR probe calibration frequency required for device testing. However, instead of the typical annual calibration recommended by measurement standards, longer calibration intervals of up to three years may be considered when it is demonstrated that the SAR target, impedance and return loss of a dipole have remain stable according to the following requirements.

1. When the most recent return-loss result, measured at least annually, deviates by more than 20% from the previous measurement (i.e. value in dB × 0.2) or not meeting the required 20 dB minimum return-loss requirement.

2. When the most recent measurement of the real or imaginary parts of the impedance, measured at least annually, deviates by more than 5 Ω from the previous measurement

Printed copies are not controlled documents

The below results show the latest return loss and impedance measurements for each dipole performed by the lab:

Dipole 2450MHz Body TSL			
	Return Loss [dB]	**Impedance [Ω]**	**Date**
Last	-26.30	55.2 + 1.2 j	2016-06-20
Dipole 5200MHz Body TSL			
	Return Loss [dB]	**Impedance [Ω]**	**Date**
Previous	-21.57	48.59 – 8.14 j	2015-06-18
Last	-21.05	47.30 – 6.14 j	2016-06-16
Difference	-12.72%	1.29 + 2 j	
Dipole 5300MHz Body TSL			
	Return Loss [dB]	**Impedance [Ω]**	**Date**
Previous	-24.37	48.26 – 5.69 j	2015-06-18
Last	-25.01	51.32 – 5.38 j	2016-06-16
Difference	13.70%	3.06 + 0.31 j	
Dipole 5500MHz Body TSL			
	Return Loss [dB]	**Impedance [Ω]**	**Date**
Previous	-30.27	51.60 – 2.67 j	2015-06-18
Last	-30.29	48.37 – 3.07 j	2016-06-16
Difference	0.45%	-3.23 – 0.4 j	
Dipole 5600MHz Body TSL			
	Return Loss [dB]	**Impedance [Ω]**	**Date**
Previous	-26.79	53.32 – 3.37 j	2015-06-18
Last	-26.35	49.61 – 2.33 j	2016-06-16
Difference	-10.66%	3.71 + 1.04 j	
Dipole 5800MHz Body TSL			
	Return Loss [dB]	**Impedance [Ω]**	**Date**
Previous	-23.97	55.20 – 4.16 j	2015-06-18
Last	-23.45	52.30 – 2.62 j	2016-06-16
Difference	-12.71%	- 2.9 + 1.54 j	

Printed copies are not controlled documents