CERTIFICATE #3478.01

TEST REPORT

EUT Description	**Wireless Module installed in Convertible PC**
Brand Name	**Intel® Dual-Band Wireless-AC 7265**
Model Name	**7265NGW**
FCC / ISED ID	**FCC ID: PD97265NG/ISED ID: 1000M-7265NG**
Date of Test Start/End	**2017-12-28 / 2018-01-02**
Features	**802.11 a/b/g/n/ac Wireless LAN + Bluetooth v4.2** (see section 5)
Description	**Platform: P28T series + WNC antenna**

Applicant	**Intel Mobile Communications**
Address	**100 Center Point Circle, Suite 200 / Columbia, SC 29210 / United States**
Contact Person	**Steven Hackett**
Telephone/Fax/ Email	**steven.c.hackett@intel.com**

Reference Standards	**FCC 47 CFR Part §2.1093** **RSS-102, Issue 5** (see section 1)	
RF Exposure Environment	**Portable devices - General population/uncontrolled exposure**	
	SAR Result	SAR Limit
Maximum SAR Result & Limit	**1.11 W/kg (1g)**	**1.6 W/kg (1g)**
Min. test separation distance	**6 mm**	

Test Report identification	**171222-02.TR01**
Revision Control	**Rev. 00** **This test report revision replaces any previous test report revision** (see section 8)

The test results relate only to the samples tested.
The test report shall not be reproduced in full, without written approval of the laboratory.

Issued by	Reviewed by
Digitally signed by Rafael QUIROZ MORENO Date: 2018.02.02 18:03:27 +01'00'	Digitally signed by Olivier FARGANT DN: cn=Olivier FARGANT, o=Intel Mobile Communications, ou=WRF Lab, email=olivier.fargant@intel.com, c=FR Date: 2018.02.02 18:27:52 +01'00'
Rafael QUIROZ (Test Engineer Lead)	Olivier FARGANT (Technical Manager)

Intel Mobile Communications France S.A.S – WRF Lab
425 rue de Goa – Le Cargo B6 - 06600, Antibes, France
Tel. +33493001400 / Fax +33493001401

Printed copies are not controlled documents

Table of Contents

1. Standards, reference documents and applicable test methods 4

2. General conditions, competences and guarantees 4

3. Environmental Conditions 5

4. Test samples 5

5. EUT Features 6

6. Remarks and comments 8

7. Test Verdicts summary 8

8. Document Revision History 8

Annex A. Test & System Description 9

A.1 SAR DEFINITION 9

A.2 SPEAG SAR MEASUREMENT SYSTEM 10

A.2.1 SAR Measurement Setup 10

A.2.2 E-Field Measurement Probe 11

A.2.3 SAM Phantom 11

A.2.4 Flat Phantom 12

A.2.5 Device Positioner 12

A.3 DATA EVALUATION 13

A.4 SYSTEM AND LIQUID CHECK 15

A.4.1 System Check 15

A.4.2 Liquid Check 16

A.5 TEST EQUIPMENT LIST 17

A.5.1 SAR System #1 17

A.5.2 Shared Instrumentation 17

A.5.3 Tissue Simulant Liquid 17

A.6 MEASUREMENT UNCERTAINTY EVALUATION 18

A.7 RF EXPOSURE LIMITS 20

Annex B. Test Results 21

B.1 TEST CONDITIONS 21

B.1.1 Test SAR Test positions relative to the phantom 21

B.1.2 Test signal, Output power and Test Frequencies 21

B.1.3 Evaluation Exclusion and Test Reductions 22

B.2 CONDUCTED POWER MEASUREMENTS 24

B.2.1 WLAN 2.4GHz 24

B.2.2 WLAN 5GHz (U-NII) 25

B.2.3 Bluetooth 29

B.3 TISSUE PARAMETERS MEASUREMENT 30

B.4 SYSTEM CHECK MEASUREMENTS 30

B.5 SAR TEST RESULTS 31

B.5.1 802.11b/g/n – 2.4GHz - DTS 31

B.5.2 802.11a/n/ac – 5.3 GHz – U-NII-2A 31

B.5.3 802.11a/n/ac – 5.6 GHz – U-NII-2C 32

B.5.4 802.11a/n/ac – 5.8 GHz – U-NII-3 32

B.5.5 SAR Measurement Variability 33

B.5.6 Simultaneous Transmission SAR Evaluation 34

Annex C. Test System Plots 36

Annex D. TSL Dielectric Parameters 49

Printed copies are not controlled documents

D.1 BODY DTS 2450MHZ 49
D.2 BODY 5200MHZ-5800MHZ 50
Annex E. Calibration Certificates 52
Annex F. Photographs 54
F.1 TEST SAMPLE 54
F.2 TEST POSITIONS 55
F.3 ANTENNA HOST PLATFORM LOCATION AND ADJACENT EDGE POSITIONS RELATIVE TO THE BODY 56
F.4 PHANTOM LIQUID LEVEL DURING MEASUREMENTS 57

Printed copies are not controlled documents

1. Standards, reference documents and applicable test methods

1. FCC 47 CFR Part §2.1093 – Radiofrequency radiation exposure evaluation: portable devices.
2. FCC OET KDB 248227 D01 – SAR guidance for IEEE 802.11 (Wi-Fi) transmitters.
3. FCC OET KDB 447498 D01 –RF Exposure Procedures and Equipment Authorization Policies for Mobile and Portable Devices.
4. FCC OET KDB 616217 D04 – SAR Evaluation Considerations for Laptop, Notebook, Netbook and Tablet Computers.
5. FCC OET KDB 865664 D01 – SAR Measurement Requirements for 100 MHz to 6 GHz.
6. FCC OET KDB 865664 D02 – RF Exposure Compliance Reporting and Documentation Considerations.
7. ISED RSS 102, Issue 5 – Radio Frequency (RF) Exposure Compliance of Radio communication Apparatus (All Frequency Bands).
8. ISED Notice 2016-DRS001 – Applicability of latest FCC RF Exposure KDB Procedures and Other Procedures.
9. ISED Notice 2012-DRS0529 – SAR correction for measured conductivity and relative permittivity based on IEC 62209-2 standard.
10. IEEE Std 1528-2013 – IEEE Recommended Practice Determining the Peak Spatial-Average Specific Absorption Rate (SAR) in the Human Head from Wireless Communication Devices: Measurement Techniques…

2. General conditions, competences and guarantees

- ✓ Intel Mobile Communications France SAS Wireless RF Lab (Intel WRF Lab) is an ISO/IEC 17025:2005 testing laboratory accredited by the American Association for Laboratory Accreditation (A2LA) with the certificate number 3478.01.
- ✓ Intel Mobile Communications France SAS Wireless RF Lab (Intel WRF Lab) is an Accredited Test Firm recognized by the FCC, with Designation Number FR0011.
- ✓ Intel Mobile Communications France SAS Wireless RF Lab (Intel WRF Lab) is a Registered Test Site listed by ISED, with ISED Assigned Code 1000Y.
- ✓ Intel WRF Lab only provides testing services and is committed to providing reliable, unbiased test results and interpretations.
- ✓ Intel WRF Lab is liable to the client for the maintenance of the confidentiality of all information related to the item under test and the results of the test.
- ✓ Intel WRF Lab has developed calibration and proficiency programs for its measurement equipment to ensure correlated and reliable results to its customers.
- ✓ This report is only referred to the item that has undergone the test.
- ✓ This report does not imply an approval of the product by the Certification Bodies or competent Authorities.
- ✓ Complete or partial reproduction of the report cannot be made without written permission of Intel WRF Lab.

Printed copies are not controlled documents

3. Environmental Conditions

✓ At the site where the measurements were performed the following limits were not exceeded during the tests:

Temperature	20.5ºC ± 1ºC
Humidity	50% ± 10%
Liquid Temperature	20ºC ± 1ºC

4. Test samples

Sample	Control #	Description	Model	Serial #	Date of receipt	Note
#01	171222-02.S02	Wireless Module installed in Convertible PC	7265NGW+P28T series	WF MAC: F4:96:34:CD:A4:0B BT MAC: F4:96:34:CD:A4:0F	2017-12-20	
	171222-02.S03	Windows PC for Remote control	DELL	NA	2017-12-20	

Printed copies are not controlled documents

5. EUT Features

Brand Name	Intel® Dual-Band Wireless-AC 7265
Model Name	7265NGW
FCC / ISED ID	FCC ID: PD97265NG/ISED ID: 1000M-7265NG
Software Version	1.7.7-04841
Driver Version	255.255.255.40
Prototype / Production	Production
Host Identification	P28T series
Exposure Conditions	Body worn
Supported Radios	802.11b/g/n 2.4GHz (2400.0 – 2483.5 MHz) 802.11a/n/ac 5.2GHz (5150.0 – 5250.0 MHz) 5.3GHz (5250.0 – 5350.0 MHz) 5.6GHz (5470.0 – 5725.0 MHz) 5.8GHz (5725.0 – 5825.0 MHz) Bluetooth 2.4GHz (2400.0 – 2483.5 MHz)
Antenna Information	**Main WLAN:** WNC PIFA antenna. WiFi 2.4GHz & 5GHz P/N: 025.9018X.0001 **Aux WLAN:** WNC PIFA antenna. WiFi 2.4GHz & 5GHz and BT. P/N: 025.9018X.0001 See Annex *F* for more details on antennas location.
Simultaneous Transmission Configurations	WLAN 2.4GHz Main + BT Aux WLAN 2.4GHz Main + WLAN 2.4GHz Aux WLAN 5GHz Main + BT Aux WLAN 5GHz Main + WLAN 5GHz Aux
Additional Information	No WWAN transmitter is considered in this report
	5.60-5.65 GHz band (TDWR) is supported by the device
	Band gap is supported by the device

Supported Radios

Mode	Duty Cycle	Modulation	Band	UL Freq Range (MHz)	Measured Max. Conducted Power (dBm)
802.11b/g/n	100%	BPSK QPSK 16QAM 64QAM	2.4GHz	2400-2483.5	17.50
802.11a/n/ac	100%	BPSK QPSK 16QAM 64QAM 256QAM	5.2GHz	5150-5250	NM
			5.3GHz	5250-5350	16.50
			5.6GHz	5475-5725	16.50
			5.8GHz	5725-5850	16.50
BDR/EDR v4.2	78%	GFSK π/4 DQPSK 8DPSK	2.4GHz	2400-2483.5	NM
Bluetooth LE v4.2	64%	GFSK	2.4GHz	2400-2483.5	NM

NM: Not Measured

Printed copies are not controlled documents

Maximum Output power specification + Tune up tolerance limit			SISO mode	
Equipment Class	Mode	BW (MHz)	Main (dBm)	Aux (dBm)
DTS	802.11b	20	17.50	17.50
	802.11g	20	17.50	17.50
	802.11n20	20	17.50	17.50
	802.11n40	40	17.50	17.50
U-NII-1	802.11a	20	16.00	16.00
	802.11n20	20	16.00	16.00
	802.11n40	40	16.50	16.50
	802.11ac80	80	13.50	13.50
U-NII-2A	802.11a	20	15.50	16.00
	802.11n20	20	15.50	16.00
	802.11n40	40	16.50	16.50
	802.11ac80	80	13.50	13.50
U-NII-2C	802.11a	20	15.50	16.00
	802.11n20	20	15.50	16.00
	802.11n40	40	16.50	16.50
	802.11ac80	80	15.00	13.50
U-NII-3	802.11a	20	15.50	16.00
	802.11n20	20	15.50	16.00
	802.11n40	40	16.50	16.50
	802.11ac80	80	15.00	14.00
BT	Bluetooth v4.2 BDR	2		6.00
	Bluetooth v4.2 EDR2	2		6.00
	Bluetooth v4.2 EDR3	2		6.00
	BLE	-		4.00

Printed copies are not controlled documents

6. Remarks and comments

1. Only the plots for the test positions with the highest measured SAR per band/mode are included in Annex C as required per FCC OET KDB 865664 D02, paragraph 2.3.8.

7. Test Verdicts summary

Standard	Band	Highest Reported SAR (1g) (W/kg)	Verdict
802.11b/g/n	2.4GHz	0.57	P
802.11a/n/ac	5.2GHz	NM	NA
	5.3GHz	1.11	P
	5.6GHz	1.02	P
	5.8GHz	0.90	P
Bluetooth	2.4GHz	0.40	P

P: Pass
F: Fail
NM: Not Measured
NA: Not Applicable

According to the FCC OET KDB 690783 D01, this is the summary of the values for the Grant Listing:

Highest Reported SAR (1g) (W/kg)			
Exposure Condition	Equipment Class		
	DTS	DSS	U-NII
Body Worn	0.57	0.40	1.11
Simultaneous Tx	Sum-SAR: 1.00 SPLSR: NA	Sum-SAR: 0.98 SPLSR: NA	Sum-SAR: 1.95 SPLSR: 0.01

Considering the results of the performed test according to FCC 47CFR Part 2.1093 and ISED RSS 102, Issue 5 the item under test is IN COMPLIANCE with the requested specifications specified in Section1. Standards, reference documents and applicable test methods

8. Document Revision History

Revision #	Date	Modified by	Revision Details
Rev. 00	2018-02-02	Rafael Quiroz	First Issue

Printed copies are not controlled documents

Annex A. Test & System Description

A.1 SAR Definition

Specific Absorption rate is defined as the time derivative of the incremental energy (dW) absorbed by (dissipated in) and incremental mass (dm) contained in a volume element (dV) of a given density (ρ).

$$SAR = \frac{d}{dt} \cdot \left(\frac{dW}{dm}\right) = \frac{d}{dt} \cdot \left(\frac{dW}{\rho \cdot dV}\right)$$

SAR is expressed in units of watts per kilogram (W/kg). SAR can be related to the electric field at a point by

$$SAR = \frac{\sigma |E|^2}{\rho}$$

Where:

σ = Conductivity of the tissue (S/m)
ρ = Mass density of the tissue (kg/m3)
E = RMS electric field strength (V/m)

Printed copies are not controlled documents

A.2 SPEAG SAR Measurement System

A.2.1 SAR Measurement Setup

The DASY6 system for performing compliance tests consists of the following items:

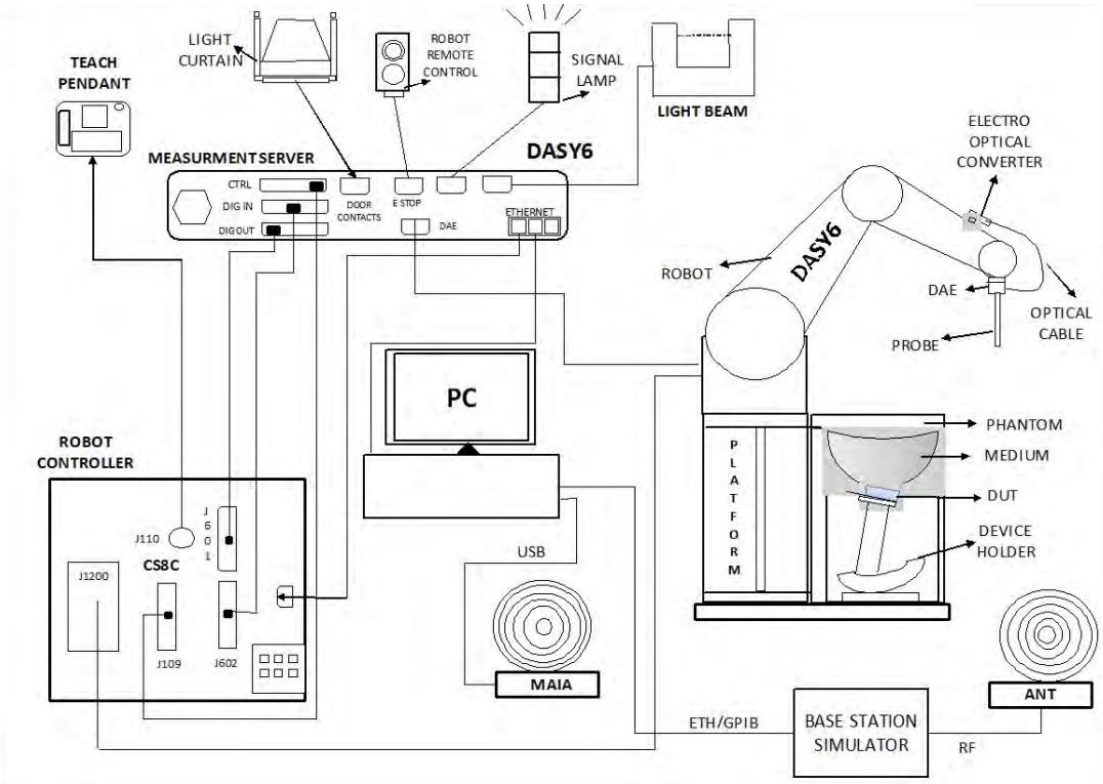

- ✓ A standard high precision 6-axis robot (Staübli TX/RX family) with controller, teach pendant and software. It includes an arm extension for accommodating the data acquisition electronics (DAE)
- ✓ An isotropic field probe optimized and calibrated for the targeted measurements.
- ✓ A data acquisition electronics (DAE) which performs the signal amplification, signal multiplexing, AD-conversion, offset measurements, mechanical surface detection, collision detection, etc. The unit is battery powered with standard or rechargeable batteries. The signal is optically transmitted to the EOC.
- ✓ The Electro-optical Converter (EOC) performs the conversion from optical to electrical signals for the digital communication to the DAE. The EOC signal is transmitted to the measurement server.
- ✓ The function of the measurement server is to perform the time critical tasks such as signal filtering, control of the robot operation and fast movements interrupts.
- ✓ The Light Beam used is for probe alignment. This improves the (absolute) accuracy of the probe positioning.
- ✓ A computer running Win7 professional operating system and the DASY6 software.
- ✓ Remote control and teach pendant as well as additional circuitry for robot safety such as warning lamps, etc.
- ✓ The phantom, the device holder and other accessories according to the targeted measurement.
- ✓ MAIA is a hardware interface (Antenna) used to evaluate the modulation and audio interference characteristics of RF signals.
- ✓ ANT is an ultra-wideband antenna for use with the base station simulators over 698 MHz to 6GHz.
- ✓ The base station simulator is an equipment used for SAR cellular tests in order to emulate the cellular signals characteristics and behavior between a regular base station and the equipment under test.
- ✓ Tissue simulating liquid.
- ✓ System Validation dipoles.
- ✓ Network emulator or RF test tool

Printed copies are not controlled documents

A.2.2 E-Field Measurement Probe

The probe is constructed using three orthogonal dipole sensors arranged on an interlocking, triangular prism core. The probe has built-in shielding against static charges and is contained within a PEEK cylindrical enclosure material at the tip.

The probe's characteristics are:

Frequency Range	30MHz – 6GHz
Length	337 mm
Probe tip external diameter	2.5 mm
Typical distance between dipoles and the probe tip	1 mm
Axial Isotropy (in human-equivalent liquids)	±0.3 dB
Hemispherical Isotropy (in human-equivalent liquids)	±0.5 dB
Linearity	±0.2 dB
Maximum operating SAR	100 W/kg
Lower SAR detection threshold	0.001 W/kg

A.2.3 SAM Phantom

The shell corresponds to the specifications of the Specific Anthropomorphic Mannequin (SAM) phantom defined in IEEE 1528 and IEC 62209-1. It enables the dosimetric evaluation of left and right hand phone usage as well as body mounted usage at the flat phantom region. A cover prevents evaporation of the liquid. Reference markings on the phantom allow the complete setup of all predefined phantom positions and measurement grids by teaching three points with the robot.

The phantom's characteristics are:

Material	Vinylester, glass fiber reinforced (VE-GF)
Shell thickness	2 mm ± 0.2 mm
Shell thickness at ERP	6 ± 0.2 mm
Filling volume	25 Liters
Dimensions	Length: 1000mm / Width: 500mm

Printed copies are not controlled documents

A.2.4 Flat Phantom

Phantom for compliance testing of handheld and body-mounted wireless devices in the frequency range of 30 MHz to 6 GHz. ELI is fully compatible with the IEC 62209-2 standard and all known tissue simulating liquids. ELI has been optimized regarding its performance and can be integrated into our standard phantom tables. A cover prevents evaporation of the liquid. Reference markings on the phantom allow installation of the complete setup, including all predefined phantom positions and measurement grids, by teaching three points. The phantom is compatible with all SPEAG dosimetric probes and dipoles.

The phantom's characteristics are:

Material	Vinylester, glass fiber reinforced (VE-GF)
Shell thickness	2 mm ± 0.2 mm
Filling volume	30 Liters approx.
Dimensions	Major axis: 600mm / Minor axis: 400mm

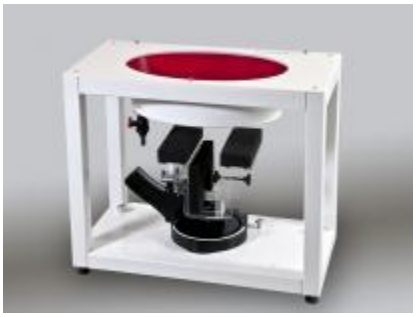

A.2.5 Device Positioner

The SAR in the phantom is approximately inversely proportional to the square of the distance between the source and the liquid surface. For a source at 5 mm distance, a positioning uncertainty of 0.5 mm would produce a SAR uncertainty of 20%. Accurate device positioning is therefore crucial for accurate and repeatable measurements. The positions in which the devices must be measured are defined by the standards.

The DASY device holder is designed to cope with the different positions given in the standard. It has two scales for device rotation (with respect to the body axis) and device inclination (with respect to the line between the ear reference points). The rotation center for both scales is the ear reference point (ERP). Thus the device needs no repositioning when changing the angles.

The DASY device holder is constructed of low-loss POM material having the following dielectric parameters: relative permittivity ε=3 and loss tangent δ=0.02. The amount of dielectric material has been reduced in the closest vicinity of the device, since measurements have suggested that the influence of the clamp on the test results could thus be lowered.

A simple but effective and easy-to-use extension for the Mounting Device; facilitates testing of larger devices according to IEC 62209-2 (e.g., laptops, cameras, etc.); lightweight and fits easily on the upper part of the Mounting Device in place of the phone positioner. The extension is fully compatible with the Twin SAM, ELI and other Flat Phantoms.

Printed copies are not controlled documents

A.3 Data Evaluation

- **Power Reference measurement**

The robot measures the E field in a specified reference position that can be either the selected section's grid reference point or a user point in this section at 4mm of the inner surface of the phantom, 2mm for frequencies above 3GHz.

- **Area Scan**

Measurement procedures for evaluating SAR from wireless handsets typically start with a coarse measurement grid to determine the approximate location of the local peak SAR values. This is known as the area-scan procedure. The SAR distribution is scanned along the inside surface of one side of the phantom head, at least for an area larger than the projection of the handset and antenna. The distance between the measured points and phantom surface should be less than 8 mm, and should remain constant (with variation less than ± 1 mm) during the entire scan in order to determine the locations of the local peak SAR with sufficient accuracy. The angle between the probe axis and the surface normal line is recommended but not required to be less than 30°. If this angle is larger than 30° and the closest point on the probe-tip housing to the phantom surface is closer than a probe diameter, the boundary effect may become larger and polarization dependent. This additional uncertainty needs to be analyzed and accounted for. To achieve this, modified test procedures and additional uncertainty analyses not described in this recommended practice may be required. The measurement and interpolation point spacing should be chosen such as to allow identification of the local peak locations to within one-half of the linear dimension of a side of the zoom-scan volume. Because a local peak having specific amplitude and steep gradients may produce a lower peak spatial-average SAR compared to peaks with slightly lower amplitude and less steep gradients, it is necessary to evaluate these other peaks as well. However, since the spatial gradients of local SAR peaks are a function of the wavelength inside the tissue-equivalent liquid and the incident magnetic field strength, it is not necessary to evaluate local peaks that are less than 2 dB or more below the global maximum peak. Two-dimensional spline algorithms (Brishoual et al. 2001; Press et al., 1996) are typically used to determine the peaks and gradients within the scanned area. If a peak is found at a distance from the scan border of less than one-half the edge dimension of the desired 1 g or 10 g cube, the measurement area should be enlarged if possible.

- **Zoom Scan**

To evaluate the peak spatial-average SAR values for 1 g or 10 g cubes, fine resolution volume scans, called zoom scans, are performed at the peak SAR locations identified during the area scan. The minimum zoom scan volume size should extend at least 1.5 times the edge dimension of a 1 g cube in all directions from the center of the scan volume, for both 1 g and 10 g peak spatial-average SAR evaluations. Along the phantom curved surfaces, the front face of the volume facing the tissue/liquid interface conforms to the curved boundary, to ensure that all SAR peaks are captured. The back face should be equally distorted to maintain the correct averaging mass. The flatness and orientation of the four side faces are unchanged from that of a cube whose orientation is within ± 30° of the line normal to the phantom at the center of the cube face next to the phantom surface. The peak local SAR locations that were determined in the area scan (interpolated values) should be used for the centers of the zoom scans. If a scan volume cannot be centered due to proximity of a phantom shape feature, the probe should be tilted to allow scan volume enlargement. If probe tilt is not feasible, the zoom-scan origin may be shifted, but not by more than half of the 1 g or 10 g cube edge dimension.

After the zoom-scan measurement, extrapolations from the closest measured points to the surface, for example along lines parallel to the zoom-scan centerline, and interpolations to a finer resolution between all measured and extrapolated points are performed. Extrapolation algorithm considerations are described in 6.5.3, and 3-D spline methods (Brishoual et al., 2001; Kreyszig, 1983; Press et al., 1996) can be used for interpolation. The peak spatial-average SAR is finally determined by a numerical averaging of the local SAR values in the interpolation grid, using for example a trapezoidal algorithm for the integration (averaging).

In some areas of the phantom, such as the jaw and upper head regions, the angle of the probe with respect to the line normal to the surface may be relatively large, e.g., greater than ± 30º, which could increase the boundary effect error to a larger level. In these cases, during the zoom scan a change in the orientation of the probe, the phantom, or both is recommended but not required for the duration of the zoom scan, so that the angle between the probe axis and the line normal to the surface is within 30º for all measurement points.

Printed copies are not controlled documents

- **Power Drift measurement**

The robot re-measures the E-Field in the same reference location measured at the Power Reference. The drift measurement gives the field difference in dB from the first to the last reference reading. This allows a user to monitor the power drift of the device under test that must remain within a maximum variation of ±5%.

- **Post-processing**

The procedure for spatial peak SAR evaluation has been implemented according to the IEEE1528 and IEC 62209-1/2 standards. It can be conducted for 1g and 10g.

The software allows evaluations that combine measured data and robot positions, such as:

- ✓ Maximum search
- ✓ Extrapolation
- ✓ Boundary correction
- ✓ Peak search for averaged SAR

Interpolation between the measured points is performed when the resolution of the grid is not fine enough to compute the average SAR over a given mass.

Extrapolation routines are used to obtain SAR values between the lowest measurement points and the inner phantom surface. The extrapolation is determined by the surface detection distance and the probe sensor offset. Several measurements at different distances are necessary for the extrapolation.

Printed copies are not controlled documents

A.4 System and Liquid Check

A.4.1 System Check

The system performance check verifies that the system operates within its specifications. System and operator errors can be detected and corrected. It is recommended that the system performance check be performed prior to any usage of the system in order to guarantee reproducible results.

The system performance check uses normal SAR measurements in a simplified setup with a well characterized source. This setup was selected to give a high sensitivity to all parameters that might fail or vary over time. The system check does not intend to replace the calibration of the components, but indicates situations where the system uncertainty is exceeded due to drift or failure.

In the simplified setup for system check, the EUT is replaced by a calibrated dipole and the power source is replaced by a controlled continuous wave generated by a signal generator. The calibrated dipole must be placed beneath the flat phantom section of the phantom at the correct distance.

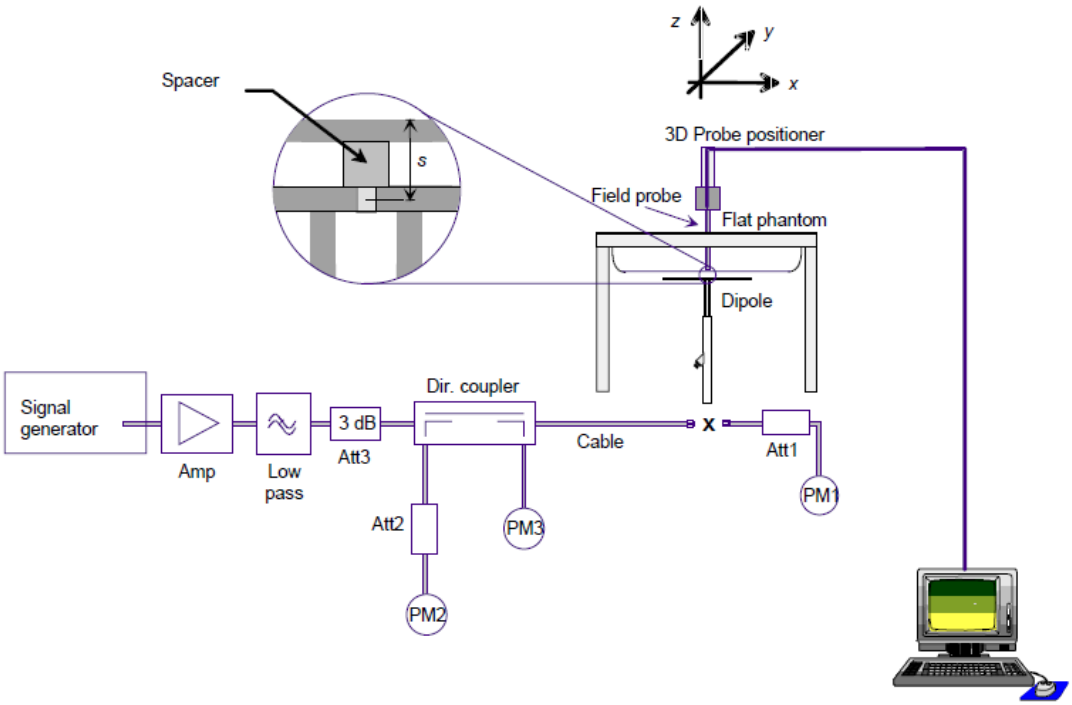

The equipment setup is shown below:

- ✓ Signal Generator
- ✓ Amplifier
- ✓ Directional coupler
- ✓ Power meter
- ✓ Calibrated dipole

First, the power meter PM1 (including attenuator Att1) is connected to the cable to measure the forward power at the location of the connector (x) to the system check source. The signal generator is adjusted for the desired forward power at the connector as read by power meter PM1 after attenuation Att1 and also as coupled through Att2 to PM2. After connecting the cable to the source, the signal generator is readjusted for the same reading at power meter PM2.

SAR results are normalized to a forward power of 1W to compare the values with the calibration reports results as described at IEEE 1528 and IEC 62209 standards.

Printed copies are not controlled documents

A.4.2 Liquid Check

The dielectric parameters check is done prior to the use of the tissue simulating liquid. The verification is made by comparing the relative permittivity and conductivity to the values recommended by the applicable standards.

The liquid verification was performed using the following test setup:

- ✓ VNA (Vector Network Analyzer)
- ✓ Open-Short-Load calibration kit
- ✓ RF Cable
- ✓ Open-Ended Coaxial probe
- ✓ DAK software tool
- ✓ SAR Liquid
- ✓ De-ionized water
- ✓ Thermometer

These are the target dielectric properties of the tissue-equivalent liquid material as defined in FCC OET KDB 865664 D01.

Frequency	Body SAR	
(MHz)	ε_r (F/m)	σ (S/m)
150	61.9	0.80
300	58.2	0.92
450	56.7	0.94
835	55.2	0.97
900	55.0	1.05
1450	54.0	1.30
1800-2000	53.3	1.52
2450	52.7	1.95
3000	52.0	2.73
5800	48.2	6.00

(ε_r = relative permittivity, σ = conductivity and ρ = 1000 kg/m3)

The measurement system implement a SAR error compensation algorithm as documented in IEEE Std 1528-2013 (equivalent to draft standard IEEE P1528-2011) to automatically compensate the measured SAR results for deviations between the measured and required tissue dielectric parameters (applied to only scale up the measured SAR, and not downward) so, according to FCC OET KDB 865664 D01, the tolerance for ε_r and σ may be relaxed to ± 10%.

Printed copies are not controlled documents

A.5 Test Equipment List

A.5.1 SAR System #1

ID #	Device	Type/Model	Serial Number	Manufacturer	Cal. Date	Cal. Due Date
0218	Laptop Holder	P/N SM LH1 001 CD	-	SPEAG	NA	NA
0221	SAM Phantom	Twin SAM v5.0	1838	SPEAG	NA	NA
0223	Measurement SW	DASY6 6.4.0.12171	9-618AE2F1	SPEAG	NA	NA
0225	Post processing SW	SEMCAD X	v14.6.10	SPEAG	NA	NA
0229	Light Beam Unit	LB5 / 80	-	Di-soric	NA	NA
0231	6-axis Robot	TX60 L	F12/5MZ3A1/A/01	STAÜBLI	NA	NA
0233	Robot Controller	CS8C	F12/5MZ3A1/C/01	STAÜBLI	NA	NA
0235	Measurement Server	DASY6 P/N: SE UMS 028 BB	1548	SPEAG	NA	NA
0243	Electro-Optical Converter	EOC60	1076	SPEAG	NA	NA
0637	Oval Flat Phantom	ELI v8.0	2059	SPEAG	NA	NA
0647	Dosimetric E-field Probe	EX3DV4	7455	SPEAG	2017-07-04	2018-07-04
0657	Data Acquisition Electronics	DAE4	1519	SPEAG	2017-07-12	2018-07-12

A.5.2 Shared Instrumentation

ID #	Device	Type/Model	Serial Number	Manufacturer	Cal. Date	Cal. Due Date
0098	USB Power Sensor	NRP-Z81	102278	R&S	2017-09-18	2019-09-18
0099	USB Power Sensor	NRP-Z81	102279	R&S	2017-09-19	2019-09-19
0114	Vector Signal Generator	ESG E4438C	MY45092885	Agilent	NA	NA
0170	Power Amplifier	SAM-01	151922	ETS-Lindgren	NA	NA
0224	Liquid measurement SW	DAK-3.5	V2.4.0.761	SPEAG	NA	NA
0237	Dielectric Probe Kit	DAK-3.5	1037	SPEAG	2016-08-22	2018-08-22
0239	2450MHz System Validation Dipole	D2450V2	937	SPEAG	2016-06-20	2018-06-20
0398	Temperature & Humidity Logger	TR-72NW-H + HHA-3151	Logger: 62180216 Sensor: 0202622A	TandD	2016-02-01	2018-02-01
0408	Thermometer	TESTO 922	33622932	Testo	2016-05-19	2018-05-19
0412	Coupler	CD0.5-8-20-30	1251-002	Amd-group	NA	NA
0591	5GHz System Validation Dipole	D5GHzv2	1259	SPEAG	2017-04-26	2019-04-26
0655	Vector Reflectometer	PLANAR R140	0190616	Copper Mountain Technologies	2017-09-19	2019-09-19

A.5.3 Tissue Simulant Liquid

TSL	Manufacturer / Model	Freq Range (MHz)	Main Ingredients
Body WideBand	SPEAG MBBL600-6000V6 Batch 160630-01	600-6000	Ethanediol, Sodium petroleum sulfonate, Hexylene Glycol / 2-Methyl-pentane-2.4-diol, Alkoxylated alcohol

Printed copies are not controlled documents

A.6 Measurement Uncertainty Evaluation

The system uncertainty evaluation is shown in the below table:

SAR System #1

SPEAG DASY6 Uncertainty Budget According to IEEE 1528-2013 and IEC 62209-1/2016 (0.3 - 6 GHz range)								
Error Description	Uncert. value	Prob. Dist.	Div.	(ci) 1g	(ci) 10g	Std. Unc. (1g)	Std. Unc. (10g)	(vi) veff
Measurement System								
Probe Calibration	±6.55 %	N	1	1	1	±6.55 %	±6.55 %	∞
Axial Isotropy	±4.7 %	R	√3	0.7	0.7	±1.9 %	±1.9 %	∞
Hemispherical Isotropy	±9.6 %	R	√3	0.7	0.7	±3.9 %	±3.9 %	∞
Boundary Effects	±2.0 %	R	√3	1	1	±1.2 %	±1.2 %	∞
Linearity	±4.7 %	R	√3	1	1	±2.7 %	±2.7 %	∞
System Detection Limits	±1.0 %	R	√3	1	1	±0.6 %	±0.6 %	∞
Modulation Response	±2.4 %	R	√3	1	1	±1.4 %	±1.4 %	∞
Readout Electronics	±0.3 %	N	1	1	1	±0.3 %	±0.3 %	∞
Response Time	±0.8 %	R	√3	1	1	±0.5 %	±0.5 %	∞
Integration Time	±2.6 %	R	√3	1	1	±1.5 %	±1.5 %	∞
RF Ambient Noise	±3.0 %	R	√3	1	1	±1.7 %	±1.7 %	∞
RF Ambient Reflections	±3.0 %	R	√3	1	1	±1.7 %	±1.7 %	∞
Probe Positioner	±0.04 %	R	√3	1	1	±0.0 %	±0.0 %	∞
Probe Positioning	±0.8 %	R	√3	1	1	±0.5 %	±0.5 %	∞
Max. SAR Eval.	±4.0 %	R	√3	1	1	±2.3 %	±2.3 %	∞
Test Sample Related								
Device Positioning	±2.9 %	N	1	1	1	±2.9 %	±2.9 %	145
Device Holder	±3.6 %	N	1	1	1	±3.6 %	±3.6 %	5
Power Drift	±5.0 %	R	√3	1	1	±2.9 %	±2.9 %	∞
Power Scaling	±0.0 %	R	√3	1	1	±0.0 %	±0.0 %	∞
Phantom and Setup								
Phantom Uncertainty	±6.6 %	R	√3	1	1	±3.8 %	±3.8 %	∞
SAR correction	±1.9 %	R	√3	1	0.84	±1.9 %	±1.6 %	∞
Liquid Conductivity (mea.)DAK	±2.5 %	R	√3	0.78	0.71	±2.0 %	±1.8 %	∞
Liquid Permittivity (mea.) DAK	±2.5 %	R	√3	0.23	0.26	±0.6 %	±0.7 %	∞
Temp. unc. - Conductivity BB	±3.4 %	R	√3	0.78	0.71	±1.5 %	±1.4 %	∞
Temp. unc. - Permittivity BB	±0.4 %	R	√3	0.23	0.26	±0.1 %	±0.1 %	∞
Combined Std. Uncertainty						±11.9 %	±11.8 %	569
Expanded STD Uncertainty						**±23.8 %**	**±23.6 %**	

Printed copies are not controlled documents

SPEAG DASY6 Uncertainty Budget According to IEC 62209-2/2010 (30 MHz - 6 GHz range)								
Error Description	Uncert. value	Prob. Dist.	Div.	(ci) 1g	(ci) 10g	Std. Unc. (1g)	Std. Unc. (10g)	(vi) veff
Measurement System								
Probe Calibration	±6.55 %	N	1	1	1	±6.55 %	±6.55 %	∞
Axial Isotropy	±4.7 %	R	√3	0.7	0.7	±1.9 %	±1.9 %	∞
Hemispherical Isotropy	±9.6 %	R	√3	0.7	0.7	±3.9 %	±3.9 %	∞
Linearity	±4.7 %	R	√3	1	1	±2.7 %	±2.7 %	∞
Modulation Response	±2.4 %	R	√3	1	1	±1.4 %	±1.4 %	∞
System Detection Limits	±1.0 %	R	√3	1	1	±0.6 %	±0.6 %	∞
Boundary Effects	±2.0 %	R	√3	1	1	±1.2 %	±1.2 %	∞
Readout Electronics	±0.3 %	N	1	1	1	±0.3 %	±0.3 %	∞
Response Time	±0.8 %	R	√3	1	1	±0.5 %	±0.5 %	∞
Integration Time	±2.6 %	R	√3	1	1	±1.5 %	±1.5 %	∞
RF Ambient Noise	±3.0 %	R	√3	1	1	±1.7 %	±1.7 %	∞
RF Ambient Reflections	±3.0 %	R	√3	1	1	±1.7 %	±1.7 %	∞
Probe Positioner	±0.04 %	R	√3	1	1	±0.0 %	±0.0 %	∞
Probe Positioning	±0.8 %	R	√3	1	1	±0.5 %	±0.5 %	∞
Post-processing	±4.0 %	R	√3	1	1	±2.3 %	±2.3 %	∞
Test Sample Related								
Device Holder	±3.6 %	N	1	1	1	±3.6 %	±3.6 %	5
Test sample Positioning	±2.9 %	N	1	1	1	±2.9 %	±2.9 %	145
Power Scaling	±0.0 %	R	√3	1	1	±0.0 %	±0.0 %	∞
Power Drift	±5.0 %	R	√3	1	1	±2.9 %	±2.9 %	∞
Phantom and Setup								
Phantom Uncertainty	±7.6 %	R	√3	1	1	±4.4 %	±4.4 %	∞
SAR correction	±1.9 %	R	√3	1	0.84	±1.9 %	±1.6 %	∞
Liquid Conductivity (mea.)DAK	±2.5 %	R	√3	0.78	0.71	±2.0 %	±1.8 %	∞
Liquid Permittivity (mea.) DAK	±2.5 %	R	√3	0.23	0.26	±0.6 %	±0.7 %	∞
Temp. unc. - Conductivity BB	±3.4 %	R	√3	0.78	0.71	±1.5 %	±1.4 %	∞
Temp. unc. - Permittivity BB	±0.4 %	R	√3	0.23	0.26	±0.1 %	±0.1 %	∞
Combined Std. Uncertainty						±12.1 %	±12.0 %	605
Expanded STD Uncertainty						**±24.1 %**	**±24.0 %**	

Printed copies are not controlled documents

A.7 RF Exposure Limits

SAR assessments have been made in line with the requirements of FCC 47 CFR Part §2.1093 and RSS 102, Issue 5 on the limitation of exposure of the general population / uncontrolled exposure for portable devices.

Exposure Type	General Population / Uncontrolled Environment
Peak spatial-average SAR (averaged over any 1 gram of tissue)	**1.6 W/kg**
Whole body average SAR	**0.08 W/kg**
Peak spatial-average SAR (extremities) (averaged over any 10 grams of tissue)	**4.0 W/kg**

Printed copies are not controlled documents

Annex B. Test Results

B.1 Test Conditions

B.1.1 Test SAR Test positions relative to the phantom

The device under test was an Intel® Dual-Band Wireless-AC 7265 card inside a host platform convertible PC (P28T series) using a set of PIFA antennas. The card was operated utilizing proprietary software (DRTU version 1.7.7-04841) and each channel was measured using a broadband power meter to determine the maximum average power.

According to FCC OET KDB 616217 D04, the back surface and edges of the tablet should be tested for SAR compliance with the tablet touching the phantom. The SAR Test Exclusion Threshold in FCC OET KDB 447498 D01 can be applied to determine SAR test exclusion for adjacent edge configurations.
The closest distance from the antenna to an adjacent tablet edge is used to determine if SAR testing is required for the adjacent edges, with the adjacent edge positioned against the phantom and the edge containing the antenna positioned perpendicular to the phantom.

Considering the antenna location diagrams in Annex F and the test exclusions described before, the surfaces/edges to be measured for each antenna are:

Antenna	Main	Aux
Position	• Top Edge* • Back Face • Right Edge*	• Top Edge* • Back Face • Left Edge*

* As dimensions of the keyboard side are slightly higher than display side then when the device is in tablet mode position the bottom border of the keyboard is slightly longer than the screen side. Then in the case of top, left and right edge positions if the sample is placed totally vertical with the keyboard and back screen side totally attached together, the antenna edge located on the top of the screen side does not touch completely the phantom surface. Therefore the device was slightly inclined to ensure the total contact of the screen edge with the phantom keeping the tablet mode user position. Several SAR tests revealed that this position is the worst case. See Annex F for more details.

See B.*1.3.1* for a more detailed list of the applied reductions.

See *F.2 Test positions* section for more information on the tested positions

B.1.2 Test signal, Output power and Test Frequencies

For 802.11 transmission modes the device was put into operation by using an own control software to program the test mode required to select the continuous transmission with 100% duty cycle.

The output power of the device was set to transmit at maximum power for all tests.

Printed copies are not controlled documents

B.1.3 Evaluation Exclusion and Test Reductions

B.1.3.1 SAR evaluation exclusion

The SAR Test Exclusion Threshold in FCC OET KDB 447498 D01 v06 can be applied to determine SAR test exclusion for adjacent edge configurations. For 100MHz to 6GHz and test separation distances ≤50mm, the 1-g and 10-g SAR test exclusion thresholds are determined by the following formula:

$$[(\text{max. power of channel, including tune} - \text{up tolerance, mW})/(\text{min. test separation distance, mm})] \cdot \left[\sqrt{f_{(GHz)}}\right] \leq 3.0\ for\ 1g\ SAR, and \leq 7.5\ for\ 10g\ extremity\ SAR \quad (1)$$

Where:

- f(GHz) is the RF channel transmit frequency in GHz
- Power and distance are rounded to the nearest mW and mm before calculation
- The result is rounded to one decimal place for comparison
- The values 3.0 and 7.5 are referred to as numeric thresholds

The test exclusions are applicable only when the minimum test separation distance is ≤ 50 mm, and for transmission frequencies between 100 MHz and 6 GHz. When the minimum test separation distance is < 5 mm, a distance of 5 mm is applied to determine SAR test exclusion.

For test separation distances > 50 mm, the 1-g and 10-g SAR test exclusion thresholds are determined using the following formulas:

$$\langle(Power\ allowed\ at\ numeric\ threshold\ for\ 50\ mm\ in\ (1)) + (test\ separation\ distance - 50\ mm) \cdot (f_{MHz}/150)\rangle mW,\ for\ 100MHz\ to\ 1500MHz \quad (2)$$

$$\langle(Power\ allowed\ at\ numeric\ threshold\ for\ 50\ mm\ in\ (1)) + (test\ separation\ distance - 50\ mm) \cdot 10)\rangle mW,\ for\ 1500MHz\ and\ \leq 6GHz \quad (3)$$

LAN Antenna	Band Name	Output power		Back Face	Top Edge	Right Edge	Left Edge	Bottom Edge	Back Face	Top Edge	Right Edge	Left Edge	Bottom Edge
		dBm	mW										
WLAN Main	DTS	17.5	56.2	**<50**	**<50**	**<50**	>50	>50	T	T	T	R	R
	U-NII-1	16.5	44.7	**<50**	**<50**	**<50**	>50	>50	R	R	R	R	R
	U-NII-2A	16.5	44.7	**<50**	**<50**	**<50**	>50	>50	T	T	T	R	R
	U-NII-2C	16.5	44.7	**<50**	**<50**	**<50**	>50	>50	T	T	T	R	R
	U-NII-3	16.5	44.7	**<50**	**<50**	**<50**	>50	>50	T	T	T	R	R
WLAN Aux	DTS	17.5	56.2	**<50**	**<50**	>50	**<50**	>50	T	T	R	T	R
	U-NII-1	16.5	44.7	**<50**	**<50**	>50	**<50**	>50	R	R	R	R	R
	U-NII-2A	16.5	44.7	**<50**	**<50**	>50	**<50**	>50	T	T	R	T	R
	U-NII-2C	16.5	44.7	**<50**	**<50**	>50	**<50**	>50	T	T	R	T	R
	U-NII-3	16.5	44.7	**<50**	**<50**	>50	**<50**	>50	T	T	R	T	R
	BT	10	10.0	**<50**	**<50**	>50	**<50**	>50	R	R	R	R	R

T: Tested position
R: Reduced

See Annex *F* for a more detailed explanation of the separation distance related to the platform.

Printed copies are not controlled documents

B.1.3.2 General SAR test reduction

According to FCC OET KDB 447498 D01, testing of other required channels within the operating mode of a frequency band is not required when the reported 1-g or 10-g SAR for the mid-band or highest output power channel is:

- ≤ 0.8 W/kg or 2.0 W/kg, for 1-g or 10-g respectively, when the transmission band is ≤ 100 MHz
- ≤ 0.6 W/kg or 1.5 W/kg, for 1-g or 10-g respectively, when the transmission band is between 100 MHz and 200 MHz
- ≤ 0.4 W/kg or 1.0 W/kg, for 1-g or 10-g respectively, when the transmission band is ≥ 200 MHz

WLAN SAR Test reduction

Transmission Mode	SAR test exclusion/reduction
DSSS	According to FCC OET KDB 248227 D01, SAR is measured for 2.4 GHz 802.11b, SAR test reduction is determined according to the following: ▪ When the reported SAR of the highest measured maximum output power channel for the exposure configuration is ≤ 0.8 W/kg, no further SAR testing is required for 802.11b DSSS in that exposure configuration. ▪ When the reported SAR is > 0.8 W/kg, SAR is required for that exposure configuration using the next highest measured output power channel. When any reported SAR is > 1.2 W/kg, SAR is required for the third channel. According to FCC OET KDB 248227 D01, SAR is not required for 2.4 GHz OFDM conditions when the highest reported SAR for DSSS is adjusted by the ratio of OFDM to DSSS specified maximum output power and the adjusted SAR is ≤ 1.2 W/kg.
OFDM	According to FCC OET KDB 248227 D01, 802.11a/g/n/ac modes have the same specified maximum output power, largest channel bandwidth, lowest order modulation and lowest data rate, the lowest order 802.11 mode is selected; i.e., 802.11a is chosen over 802.11n then 802.11ac or 802.11g is chosen over 802.11n. According to FCC OET KDB 248227 D01, an *initial test configuration* is determined for OFDM and DSSS transmission modes according to the channel bandwidth, modulation and data rate combination(s) with the highest maximum output power specified for production units in each standalone and aggregated frequency band. SAR is measured using the highest measured maximum output power channel. SAR test reduction for subsequent highest output test channels is determined according to reported SAR of the initial test configuration. The *initial test configuration* for 5 GHz OFDM transmission modes is determined by the 802.11 configuration with the highest maximum output power specified for production units, including tune-up tolerance, in each standalone and aggregated frequency band. SAR for the initial test configuration is measured using the highest maximum output power channel determined by the default power measurement procedures. According to FCC OET KDB 248227 D01, when the reported SAR of the initial test configuration is > 0.8 W/kg, SAR measurement is required for subsequent next highest measured output power channel(s) in the initial test configuration until reported SAR is ≤ 1.2 W/kg or all required channels are tested.

Printed copies are not controlled documents

B.2 Conducted Power Measurements

B.2.1 WLAN 2.4GHz

					Main		Aux		SAR Test ?
Band	Mode	Data Rate	Ch #	Freq (MHz)	Avg Pwr (dBm)	Tune-up Pwr (dBm)	Avg Pwr (dBm)	Tune-up Pwr (dBm)	
2.4GHz (DTS)	802.11b	1Mbps	1	2412	16.10	16.50	16.43	16.50	No[3]
			6	2437	**17.40**	17.50	**17.33**	17.50	Yes
			11	2462	17.27	17.50	17.30	17.50	No[3]
	802.11g	6Mbps	1	2412	NR[1,2]	14.00	NR[1,2]	14.50	No[2]
			6	2437		17.50		17.50	
			11	2462		12.50		12.50	
	802.11n20	HT0	1	2412		14.00		14.50	
			6	2437		17.50		17.50	
			11	2462		12.50		12.50	
	802.11n40		3	2422		13.50		13.50	
			6	2437		17.50		17.50	
			9	2452		12.50		11.50	

Initial test configuration

1. NR: Not Required
2. As per FCC OET KDB 248227 D01, conducted output power and SAR testing are not required for 802.11g/n20/n40 channels when the highest reported SAR for DSSS is adjusted by the ratio of OFDM to DSSS specified maximum output power and the adjusted SAR is ≤ 1.2W/kg.
3. When the reported SAR of the initial test configuration is > 0.8 W/kg, SAR measurement is required for subsequent next highest measured output power channel(s) in the initial test configuration until reported SAR is ≤ 1.2 W/kg or all required channels are tested.

Printed copies are not controlled documents

B.2.2 WLAN 5GHz (U-NII)

B.2.2.1 5.2GHz and 5.3GHz (U-NII-1 and U-NII-2A)

					Main		Aux		SAR Test ?
Band	Mode	Data Rate	Ch #	Freq (MHz)	Avg Pwr (dBm)	Tune-up Pwr (dBm)	Avg Pwr (dBm)	Tune-up Pwr (dBm)	
5.2GHz (U-NII-1)	802.11a	6Mbps	36	5180	NR[1,2]	14.00	NR[1,2]	14.00	No[2]
			40	5200		15.50		16.00	
			44	5220		15.50		16.00	
			48	5240		15.50		16.00	
	802.11n20	HT0	36	5180		14.00		14.00	
			40	5200		15.50		16.00	
			44	5220		15.50		16.00	
			48	5240		15.50		16.00	
	802.11n40		38	5190		12.00		13.50	
			46	5230		16.50		16.50	
	802.11ac80	VHT0	42	5210		13.50		13.50	

Initial test configuration

1. NR: Not Required
2. When the same maximum output power is specified for both bands, begin SAR measurement in U-NII-2A band by applying the OFDM SAR requirements. If the highest reported SAR for a test configuration is ≤ 1.2 W/kg, SAR is not required for U-NII-1 band (see §B.5.2 in this document).
3. Additional conducted power measurement is required when reported SAR is > 1.2W/kg. In case the subsequent test configuration and the channel bandwidth is smaller than the initial test configuration, all channels that overlap with the larger channel bandwidth in the initial configuration should be tested.
4. The initial test configuration for 2.4 GHz and 5 GHz OFDM transmission modes is determined by the 802.11 configuration with the highest maximum output power specified for production units, including tune-up tolerance, in each standalone and aggregated frequency band. SAR for the initial test configuration is measured using the highest maximum output power channel determined by the default power measurement procedures. When multiple transmission modes (802.11a/g/n/ac) have the same specified maximum output power, largest channel bandwidth, lowest order modulation and lowest data rate, lowest order 802.11 mode is selected (i.e. a, g, n, then ac)
5. When the reported SAR of the initial test configuration is > 0.8W/kg, SAR measurement is required for the subsequent next highest measured output power channel(s) in the initial test configuration until reported SAR is ≤1.2W/kg or all required channels are tested.
6. When the highest reported SAR for the initial test configuration (when applicable, include subsequent highest output channels), according to the initial test position or fixed exposure requirements, is adjusted by the ratio of the subsequent test configuration to the initial test configuration specified maximum output power and the adjusted SAR is ≤1.2 W/Kg, SAR is not required for that subsequent test configuration
7. SAR for subsequent highest measured maximum output power channels in the subsequent test configuration is required only when the reported SAR of the preceding higher maximum output power channel(s) in the subsequent test configuration is >1.2 W/Kg or until all required channels are tested.

Printed copies are not controlled documents

					Main		Aux		SAR Test?
Band	Mode	Data Rate	Ch #	Freq (MHz)	Avg Pwr (dBm)	Tune-up Pwr (dBm)	Avg Pwr (dBm)	Tune-up Pwr (dBm)	
5.3GHz (U-NII-2A)	802.11a	6Mbps	52	5260	NR[1,3]	15.50	NR[1,3]	16.00	No[2,5]
			56	5280		15.50		16.00	
			60	5300		15.50		16.00	
			64	5320		13.50		13.50	
	802.11n20	HT0	52	5260		15.50		16.00	
			56	5280		15.50		16.00	
			60	5300		15.50		16.00	
			64	5320		13.50		13.50	
	802.11n40		54	5270	**16.37**	16.50	**16.48**	16.50	Yes
			62	5310	13.30	13.50	13.10	13.50	Yes
	802.11ac80	VHT0	58	5290	NR[1,3]	13.50	NR[1,3]	13.50	No[2,5]

Initial test configuration

1. NR: Not Required
2. The initial test configuration for 2.4 GHz and 5 GHz OFDM transmission modes is determined by the 802.11 configuration with the highest maximum output power specified for production units, including tune-up tolerance, in each standalone and aggregated frequency band. SAR for the initial test configuration is measured using the highest maximum output power channel determined by the default power measurement procedures. When multiple transmission modes (802.11a/g/n/ac) have the same specified maximum output power, largest channel bandwidth, lowest order modulation and lowest data rate, lowest order 802.11 mode is selected (i.e. a, g, n, then ac)
3. Additional conducted power measurement is required when reported SAR is > 1.2W/kg. In case the subsequent test configuration and the channel bandwidth is smaller than the initial test configuration, all channels that overlap with the larger channel bandwidth in the initial configuration should be tested.
4. When the reported SAR of the initial test configuration is > 0.8W/kg, SAR measurement is required for the subsequent next highest measured output power channel(s) in the initial test configuration until reported SAR is ≤1.2W/kg or all required channels are tested.
5. When the highest reported SAR for the initial test configuration (when applicable, include subsequent highest output channels), according to the initial test position or fixed exposure requirements, is adjusted by the ratio of the subsequent test configuration to the initial test configuration specified maximum output power and the adjusted SAR is ≤1.2 W/Kg, SAR is not required for that subsequent test configuration.
6. SAR for subsequent highest measured maximum output power channels in the subsequent test configuration is required only when the reported SAR of the preceding higher maximum output power channel(s) in the subsequent test configuration is >1.2 W/Kg or until all required channels are tested.

Printed copies are not controlled documents

B.2.2.2 5.6 (U-NII-2C)

Band	Mode	Data Rate	Ch #	Freq (MHz)	Main Avg Pwr (dBm)	Main Tune-up Pwr (dBm)	Aux Avg Pwr (dBm)	Aux Tune-up Pwr (dBm)	SAR Test?
5.6GHz (U-NII-2C)	802.11a	6Mbps	100	5500	NR[1,3]	13.50	NR[1,3]	14.00	No[4,6]
			104	5520		15.50		16.00	
			108	5540		15.50		16.00	
			112	5560		15.50		16.00	
			116	5580		15.50		16.00	
			120	5600		15.50		16.00	
			124	5620		15.50		16.00	
			128	5640		15.50		16.00	
	802.11n20	HT0	100	5500		13.50		13.50	
			104	5520		15.50		16.00	
			108	5540		15.50		16.00	
			112	5560		15.50		16.00	
			116	5580		15.50		16.00	
			120	5600		15.50		16.00	
			124	5620		15.50		16.00	
			128	5640		15.50		16.00	
	802.11n40		102	5510	13.30	13.50	13.95	14.00	No[5]
			110	5550	**16.50**	16.50	16.10	16.50	Yes
			118	5590	16.10	16.50	**16.30**	16.50	Yes
			126	5630	16.50	16.50	16.10	16.50	Yes
	802.11ac80	VHT0	106	5530	NR[1,3]	13.50	NR[1,3]	13.50	No[4,6]
			122	5610		15.00		13.50	

Initial test configuration

1. NR: Not Required
2. When band gap channels between U-NII-2C and U-NII-3 band are supported channels in U-NII-2C band below 5.65 GHz are considered as one band and channels above 5.65 GHz, together with channels in 5.8 GHz U-NII-3 or §15.247 band, are considered as a separate band
3. Additional conducted power measurement is required when reported SAR is > 1.2W/kg. In case the subsequent test configuration and the channel bandwidth is smaller than the initial test configuration, all channels that overlap with the larger channel bandwidth in the initial configuration should be tested
4. The initial test configuration for 2.4 GHz and 5 GHz OFDM transmission modes is determined by the 802.11 configuration with the highest maximum output power specified for production units, including tune-up tolerance, in each standalone and aggregated frequency band. SAR for the initial test configuration is measured using the highest maximum output power channel determined by the default power measurement procedures. When multiple transmission modes (802.11a/g/n/ac) have the same specified maximum output power, largest channel bandwidth, lowest order modulation and lowest data rate, lowest order 802.11 mode is selected (i.e. a, g, n, then ac)
5. When the reported SAR of the initial test configuration is > 0.8W/kg, SAR measurement is required for the subsequent next highest measured output power channel(s) in the initial test configuration until reported SAR is ≤1.2W/kg or all required channels are tested.
6. When the highest reported SAR for the initial test configuration (when applicable, include subsequent highest output channels), according to the initial test position or fixed exposure requirements, is adjusted by the ratio of the subsequent test configuration to the initial test configuration specified maximum output power and the adjusted SAR is≤1.2 W/Kg, SAR is not required for that subsequent test configuration.
7. SAR for subsequent highest measured maximum output power channels in the subsequent test configuration is required only when the reported SAR of the preceding higher maximum output power channel(s) in the subsequent test configuration is >1.2 W/Kg or until all required channels are tested.

Printed copies are not controlled documents

B.2.2.3 5.8GHz (U-NII-3)

					Main		Aux		SAR Test?
Band	Mode	Data Rate	Ch #	Freq (MHz)	Avg Pwr (dBm)	Tune-up Pwr (dBm)	Avg Pwr (dBm)	Tune-up Pwr (dBm)	
5.6-5.8GHz (U-NII-3)	802.11a	6Mbps	132	5660	NR[1,3]	15.50	NR[1,3]	16.00	No[4,6]
			136	5680		15.50		16.00	
			140	5700		13.00		13.00	
			149	5745		15.50		16.00	
			153	5765		15.50		16.00	
			157	5785		15.50		16.00	
			161	5805		15.50		16.00	
			165	5825		15.50		16.00	
	802.11n20	HT0	132	5660		15.50		16.00	
			136	5680		15.50		16.00	
			140	5700		13.00		13.00	
			149	5745		15.50		16.00	
			153	5765		15.50		16.00	
			157	5785		15.50		16.00	
			161	5805		15.50		16.00	
			165	5825		15.50		16.00	
	802.11n40		134	5670	16.20	16.50	16.40	16.50	Yes
			151	5755	16.14	16.50	16.35	16.50	No[5]
			159	5795	**16.23**	16.50	**16.50**	16.50	Yes
	802.11ac80	VHT0	138	5690	NR[1,3]	15.00	NR[1,3]	11.50	No[4,6]
			155	5775		15.00		14.00	

Initial test configuration

1. NR: Not Required
2. When band gap channels between U-NII-2C and U-NII-3 band are supported channels in U-NII-2C band below 5.65 GHz are considered as one band and channels above 5.65 GHz, together with channels in 5.8 GHz U-NII-3 or §15.247 band, are considered as a separate band
3. Additional conducted power measurement is required when reported SAR is > 1.2W/kg. In case the subsequent test configuration and the channel bandwidth is smaller than the initial test configuration, all channels that overlap with the larger channel bandwidth in the initial configuration should be tested
4. The initial test configuration for 2.4 GHz and 5 GHz OFDM transmission modes is determined by the 802.11 configuration with the highest maximum output power specified for production units, including tune-up tolerance, in each standalone and aggregated frequency band. SAR for the initial test configuration is measured using the highest maximum output power channel determined by the default power measurement procedures. When multiple transmission modes (802.11a/g/n/ac) have the same specified maximum output power, largest channel bandwidth, lowest order modulation and lowest data rate, lowest order 802.11 mode is selected (i.e. a, g, n, then ac)
5. When the reported SAR of the initial test configuration is > 0.8W/kg, SAR measurement is required for the subsequent next highest measured output power channel(s) in the initial test configuration until reported SAR is ≤1.2W/kg or all required channels are tested.
6. When the highest reported SAR for the initial test configuration (when applicable, include subsequent highest output channels), according to the initial test position or fixed exposure requirements, is adjusted by the ratio of the subsequent test configuration to the initial test configuration specified maximum output power and the adjusted SAR is ≤1.2 W/Kg, SAR is not required for that subsequent test configuration.
7. SAR for subsequent highest measured maximum output power channels in the subsequent test configuration is required only when the reported SAR of the preceding higher maximum output power channel(s) in the subsequent test configuration is >1.2 W/Kg or until all required channels are tested.

Printed copies are not controlled documents

B.2.3 Bluetooth

Band	Mode	Data Rate	Channel	Frequency (MHz)	Antenna	Avg Pwr (dBm)	Tune-up Pwr (dBm)
2.4GHz	Bluetooth v4.2	Basic rate GFSK	0	2402	Aux	NR[1,2]	6.00
			39	2441			6.00
			78	2480			6.00
	Bluetooth v4.2	Basic rate π/4 DQPSK	0	2402			6.00
			39	2441			6.00
			78	2480			6.00
	Bluetooth v4.2	Basic rate 8-DPSK	0	2402			6.00
			39	2441			6.00
			78	2480			6.00
	Bluetooth v4.2	Low energy GFSK	0	2412			4.00
			20	2437			4.00
			39	2480			4.00

Initial test configuration

1. NR: Not Required
2. According to KDB 447498 D01 v05r02 section 4.3.1, Standalone SAR test exclusion considerations, SAR test for BT are reduced due to maximum channel power specification including tune-up tolerance and minimal test separation distance.

Printed copies are not controlled documents

B.3 Tissue Parameters Measurement

Body TSL

Freq. (MHz)	Target Parameters		Measured TSL Parameters		Deviation (%)		Date
	ε' (F/m)	σ (S/m)	ε' (F/m)	σ (S/m)	ε'	σ	
2450	52.70	1.95	50.76	2.10	-3.69	7.70	2018-01-02
5300	48.88	5.41	44.64	5.56	-8.67	2.65	2017-12-29
5600	48.47	5.76	43.97	5.97	-9.29	3.58	2017-12-29
5800	48.20	6.00	44.26	6.26	-8.18	4.32	2018-01-02

See *Annex D* for more details

B.4 System Check Measurements

Body Measurements

Frequency (MHz)	Average	Target SAR (W/Kg)	Measured SAR (W/Kg)	Deviation to target (%)	Limit (%)	Date
2450	1g	49.40	51.80	4.86	±10	2018-01-02
	10g	23.40	24.00	2.56		
5300	1g	76.80	77.20	0.52		2017-12-29
	10g	21.60	21.80	0.93		
5600	1g	77.80	77.20	-0.77		2017-12-29
	10g	21.80	22.60	3.67		
5800	1g	75.30	68.20	-9.43		2018-01-02
	10g	21.00	20.20	-3.81		

See *Annex C* for more details.

Printed copies are not controlled documents

B.5 SAR Test Results

B.5.1 802.11b/g/n – 2.4GHz - DTS

Ant.	Mode Data rate	BW (MHz)	Ch #	Freq (MHz)	Position	Correct. Factor (dB)	SAR 1g (W/kg)	Reported SAR 1g (W/kg)	Plot #
Main	802.11b 1Mbps	20	6	2437	Top Edge	0.10	0.56	0.57	**1**
					Back Face	0.10	0.34	0.35	
					Right Edge	0.10	0.14	0.10	
Aux			6	2437	Top Edge	0.17	0.41	0.43	**2**
					Back Face	0.17	0.27	0.28	
					Left Edge	0.17	0.06	0.06	

B.5.2 802.11a/n/ac – 5.3 GHz – U-NII-2A

Ant.	Mode Data rate	BW (MHz)	Ch #	Freq (MHz)	Position	Correct. Factor (dB)	SAR 1g (W/kg)	Reported SAR 1g (W/kg)	Plot #
Main	HT0	40	54	5270	Top Edge	0.13	0.82	0.84	**3**
					Back Face	0.13	0.54	0.56	
					Right Edge	0.13	0.07	0.08	
			62	5310	Top Edge	0.20	0.45	0.47	
Aux	HT0	40	54	5270	Top Edge	0.02	1.10	1.11	**4**
					Back Face	0.02	0.33	0.33	
					Left Edge	0.02	0.04	0.04	
			62	5310	Top Edge	0.40	0.41	0.45	

Printed copies are not controlled documents

B.5.3 802.11a/n/ac – 5.6 GHz – U-NII-2C

Ant.	Mode Data rate	BW (MHz)	Ch #	Freq (MHz)	Position	Correct. Factor (dB)	SAR 1g (W/kg)	Reported SAR 1g (W/kg)	Plot #
Main	HT0	40	110	5550	Top Edge	0.00	0.77	0.77	**5**
					Back Face	0.00	0.57	0.57	
					Right Edge	0.00	0.07	0.07	
Aux	HT0	40	118	5590	Top Edge	0.20	0.98	1.02	**6**
					Back Face	0.20	0.32	0.34	
					Left Edge	0.20	0.01	0.02	
			126	5630	Top Edge	0.40	0.84	0.92	

B.5.4 802.11a/n/ac – 5.8 GHz – U-NII-3

Ant.	Mode Data rate	BW (MHz)	Ch #	Freq (MHz)	Position	Correct. Factor (dB)	SAR 1g (W/kg)	Reported SAR 1g (W/kg)	Plot #
Main	HT0	40	159	5795	Top Edge	0.27	0.70	0.74	
					Back Face	0.27	0.85	0.90	**7**
					Right Edge	0.27	0.06	0.06	
			134	5670	Back Face	0.30	0.77	0.83	
Aux	HT0	40	159	5795	Top Edge	0.00	0.67	0.67	**8**
					Back Face	0.00	0.32	0.32	
					Left Edge	0.00	0.01	0.01	

Printed copies are not controlled documents

B.5.5 SAR Measurement Variability

According to FCC OET KDB 865664, SAR Measurement variability is assessed when the maximum initial measured SAR is >0.8 W/kg for a certain band/mode. If the measured SAR value of the initial repeated measurement is <1.45 W/kg with <20% variation, only one repeated measurement is required to confirm that the results are not expected to have substantial variations.
A second repeated measurement is required only if the measured results for the initial repeated measurement are within 10% of the SAR limit or vary by more than 20%.
A third repeated measurement is required only if the original, first or second repeated measurement ≥1.5W/Kg and the ratio of largest to smallest SAR for the original, first and second repeated measurement is > 1.2.

Band / Mode	Position	Ch #	Freq. (MHz)	Measured SAR 1g (W/kg)	1st Repeated SAR 1g (W/Kg)	2nd Repeated SAR 1g (W/Kg)	Highest Ratio
5.3GHz 802.11ac80 VHT0	Top Edge	54	5270	1.10	1.08		1.02
5.6GHz 802.11ac80 VHT0	Top Edge	118	5590	0.87	0.98		1.12
5.8GHz 802.11ac80 VHT0	Back Face	159	5795	0.84	0.85		1.01

Printed copies are not controlled documents

B.5.6 Simultaneous Transmission SAR Evaluation

According to FCC OET KDB 447498 D01, when the sum of 1g SAR for all simultaneously transmitting antennas in an operating mode and exposure condition combination is within the SAR limit, SAR test exclusion applies to that simultaneous transmission configuration.

All the values stated in the table below are the worst case found for standalone measurement with disregard of the transmission mode or channel where the worst case was found

Antenna	Position	Highest Reported SAR (1g) (W/Kg)		
		WLAN 2.4GHz	WLAN 5GHz	Bluetooth
Main	Top Edge	0.57	0.84	
	Back Face	0.35	0.90	
	Right Edge	0.10	0.08	
	Left Edge	0.40*	0.40*	
Aux	Top Edge	0.43	1.11	0.14*
	Back Face	0.28	0.34	0.04*
	Right Edge	0.40*	0.40*	0.40*
	Left Edge	0.06	0.04	0.03*

* According to FCC OET KDB 447498 D01, when standalone test exclusion is applied to an antenna that transmits simultaneously with other antennas, in order to determine simultaneous transmission test exclusion, the standalone SAR must be estimated to:

- 0.4 W/Kg for 1-g SAR when the test separation is > 50mm
- [(max. power of channel, including tune-up tolerance, mW)/(min. test separation distance, mm)]·[√f(GHz)/x] W/kg where x = 7.5 for 1-g SAR when the test separation is ≤ 50mm

See F.3 Antenna host platform location and adjacent edge positions relative to the body for more details on antennas location and *B.2* Conducted Power Measurements for maximum power details

Position	Simultaneous Tx Antenna Combination		Σ SAR 1g (W/Kg)	Limit (W/kg)
	Main Antenna	Aux Antenna		
Top Edge	WLAN 5GHz	WLAN 5GHz	**1.95**	1.6
	WLAN 5GHz	BT	0.98	
	WLAN 2.4GHz	WLAN 2.4GHz	1.00	
	WLAN 2.4GHz	BT	0.71	
Back Face	WLAN 5GHz	WLAN 5GHz	1.24	
	WLAN 5GHz	BT	0.94	
	WLAN 2.4GHz	WLAN 2.4GHz	0.63	
	WLAN 2.4GHz	BT	0.39	
Right Edge	WLAN 5GHz	WLAN 5GHz	0.48	
	WLAN 5GHz	BT	0.48	
	WLAN 2.4GHz	WLAN 2.4GHz	0.50	
	WLAN 2.4GHz	BT	0.50	
Left Edge	WLAN 5GHz	WLAN 5GHz	0.44	
	WLAN 5GHz	BT	0.43	
	WLAN 2.4GHz	WLAN 2.4GHz	0.46	
	WLAN 2.4GHz	BT	0.43	

Printed copies are not controlled documents

In case the sum of SAR is larger than the limit, SAR test exclusion is determined by the SAR to peak location separation ratio:

Position	Antenna	Reported SAR 1g (W/kg)	Σ SAR 1g (W/Kg)	Peak Location (mm) (x,y,z)	SAR to peak location separation ratio	Limit
Top Edge	Main WLAN 5GHz	0.84	1.95	(0, 111, -176.83)	0.01	0.04
	Aux WLAN 5GHz	1.11		(0, -110, -177.129)		

Considering the results described above and according to the simultaneous transmission evaluation exclusions described in FCC OET KDB 447498 D01, no enlarged zoom scan measurements are required.

Printed copies are not controlled documents

Annex C. Test System Plots

1. DTS - 802.11b, CH6, Main Antenna – Top Edge 37
2. DTS - 802.11b, CH6, Aux Antenna – Top Edge 38
3. U-NII-2A - 802.11n40, CH54, Main Antenna – Top Edge 39
4. U-NII-2A - 802.11n40, CH54, Aux Antenna – Top Edge 40
5. U-NII-2C - 802.11n40, CH110, Main Antenna – Top Edge 41
6. U-NII-2C - 802.11n40, CH118, Aux Antenna – Top Edge 42
7. U-NII-3 - 802.11n40, CH159, Main Antenna – Back Face 43
8. U-NII-3 - 802.11n40, CH159, Aux Antenna – Top Edge 44
9. System Check Body Liquid 2450MHz 45
10. System Check Body Liquid 5300MHz 46
11. System Check Body Liquid 5600MHz 47
12. System Check Body Liquid 5800MHz 48

Printed copies are not controlled documents

1. DTS - 802.11b, CH6, Main Antenna – Top Edge

Device under Test Properties

Name, Manufacturer	Dimensions [mm]	WIFI MAC	DUT Type
P28T, DELL	304.0 x 210.0 x 24.0	E4:42:A6:F6:3A:1A	Convertible PC

Exposure Conditions

Phantom Section, TSL	Position, Test Distance [mm]	Band	Group, UID	Frequency [MHz], Channel Number	Conversion Factor	TSL Conductivity [S/m]	TSL Permittivity
Flat, MuscleSimulating Liquid	EDGE TOP, 0	WLAN 2.4GHz	WLAN, 10012-CAB	2437.0, 6	7.3	2.09	50.8

Hardware Setup

Phantom	TSL, Measured Date	Probe, Calibration Date	DAE, Calibration Date
ELI V8.0 (20deg probe tilt) - 2059	MBBL-600-6000v5, 2018-Jan-02	EX3DV4 - SN7455, 2017-07-04	DAE4 Sn1519, 2017-07-12

Scan Setup

	Area Scan	Zoom Scan
Grid Extents [mm]	72.0 x 72.0	30.0 x 30.0 x 30.0
Grid Steps [mm]	12.0 x 12.0	5.0 x 5.0 x 5.0
Sensor Surface [mm]	3.0	1.4
Graded Grid	No	No
Grading Ratio	n/a	n/a
MAIA	Confirmed by MAIA	Confirmed by MAIA
Surface Detection	Yes	Yes
Scan Method	Measured	Measured

Measurement Results

	Area Scan	Zoom Scan
Date	2018-01-02, 14:29	2018-01-02, 14:35
SAR 1g [W/Kg]	**0.530**	**0.558**
SAR 10g [W/Kg]	**0.244**	**0.257**
Power Drift [dB]	-0.02	0.07
Power Scaling	Disabled	Disabled
Scaling Factor [dB]		
TSL Correction	No correction	No correction

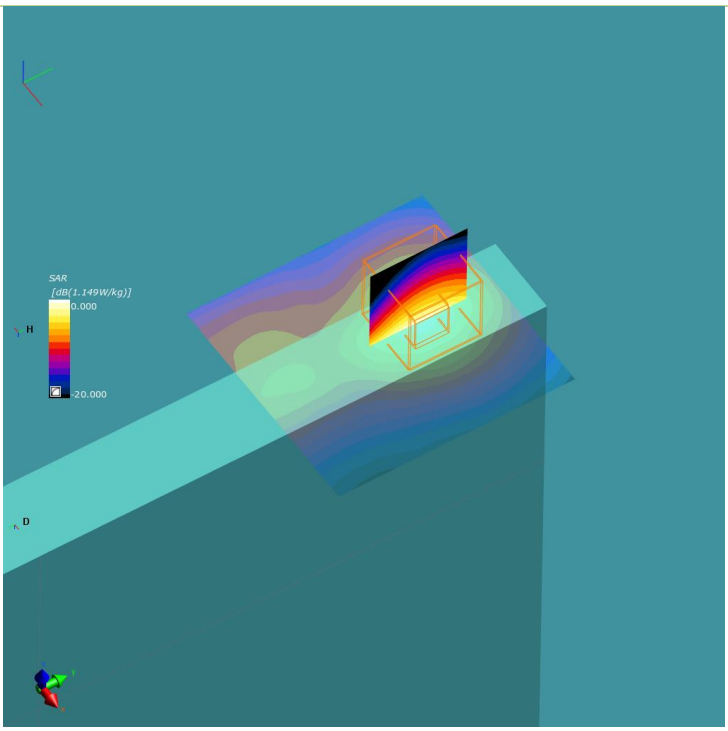

Printed copies are not controlled documents

2. DTS - 802.11b, CH6, Aux Antenna – Top Edge

Device under Test Properties

Name, Manufacturer	Dimensions [mm]	WIFI MAC	DUT Type
P28T, DELL	304.0 x 210.0 x 24.0	E4:42:A6:F6:3A:1A	Convertible PC

Exposure Conditions

Phantom Section, TSL	Position, Test Distance [mm]	Band	Group, UID	Frequency [MHz], Channel Number	Conversion Factor	TSL Conductivity [S/m]	TSL Permittivity
Flat, MuscleSimulating Liquid	EDGE TOP, 0	WLAN 2.4GHz	WLAN, 10012-CAB	2437.0, 6	7.3	2.09	50.8

Hardware Setup

Phantom	TSL, Measured Date	Probe, Calibration Date	DAE, Calibration Date
ELI V8.0 (20deg probe tilt) - 2059	MBBL-600-6000v5, 2018-Jan-02	EX3DV4 - SN7455, 2017-07-04	DAE4 Sn1519, 2017-07-12

Scan Setup

	Area Scan	Zoom Scan
Grid Extents [mm]	72.0 x 72.0	30.0 x 30.0 x 30.0
Grid Steps [mm]	12.0 x 12.0	5.0 x 5.0 x 5.0
Sensor Surface [mm]	3.0	1.4
Graded Grid	No	No
Grading Ratio	n/a	n/a
MAIA	Confirmed by MAIA	Confirmed by MAIA
Surface Detection	Yes	Yes
Scan Method	Measured	Measured

Measurement Results

	Area Scan	Zoom Scan
Date	2018-01-02, 15:09	2018-01-02, 15:16
SAR 1g [W/Kg]	**0.414**	**0.411**
SAR 10g [W/Kg]	**0.205**	**0.199**
Power Drift [dB]	-0.05	0.06
Power Scaling	Disabled	Disabled
Scaling Factor [dB]		
TSL Correction	No correction	No correction

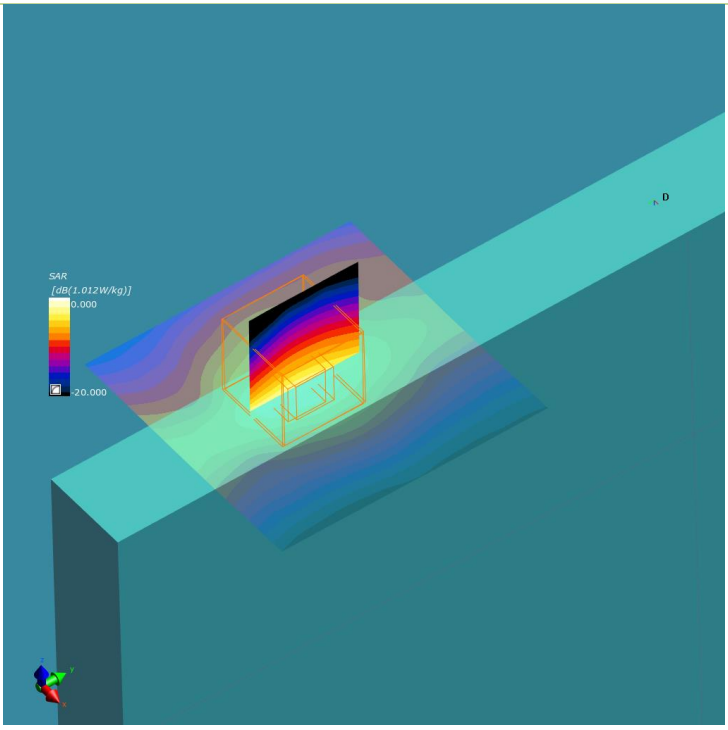

Printed copies are not controlled documents

3. U-NII-2A - 802.11n40, CH54, Main Antenna – Top Edge

Device under Test Properties

Name, Manufacturer	Dimensions [mm]	WIFI MAC	DUT Type
P28T, DELL	304.0 x 210.0 x 24.0	E4:42:A6:F6:3A:1A	Convertible PC

Exposure Conditions

Phantom Section, TSL	Position, Test Distance [mm]	Band	Group, UID	Frequency [MHz], Channel Number	Conversion Factor	TSL Conductivity [S/m]	TSL Permittivity
Flat, MuscleSimulating Liquid	EDGE TOP, 0	WLAN 5GHz	WLAN, 10114-CAB	5270.0, 54	4.75	5.52	44.7

Hardware Setup

Phantom	TSL, Measured Date	Probe, Calibration Date	DAE, Calibration Date
ELI V8.0 (20deg probe tilt) - 2059	MBBL-600-6000v5, 2017-Dec-29	EX3DV4 - SN7455, 2017-07-04	DAE4 Sn1519, 2017-07-12

Scan Setup

	Area Scan	Zoom Scan
Grid Extents [mm]	60.0 x 80.0	22.0 x 22.0 x 22.0
Grid Steps [mm]	10.0 x 10.0	4.0 x 4.0 x 1.4
Sensor Surface [mm]	3.0	1.4
Graded Grid	No	Yes
Grading Ratio	n/a	1.4
MAIA	Confirmed by MAIA	Confirmed by MAIA
Surface Detection	Yes	Yes
Scan Method	Measured	Measured

Measurement Results

	Area Scan	Zoom Scan
Date	2017-12-29, 13:12	2017-12-29, 13:24
SAR 1g [W/Kg]	**0.811**	**0.816**
SAR 10g [W/Kg]	**0.283**	**0.252**
Power Drift [dB]	-0.00	-0.08
Power Scaling	Disabled	Disabled
Scaling Factor [dB]		
TSL Correction	No correction	No correction

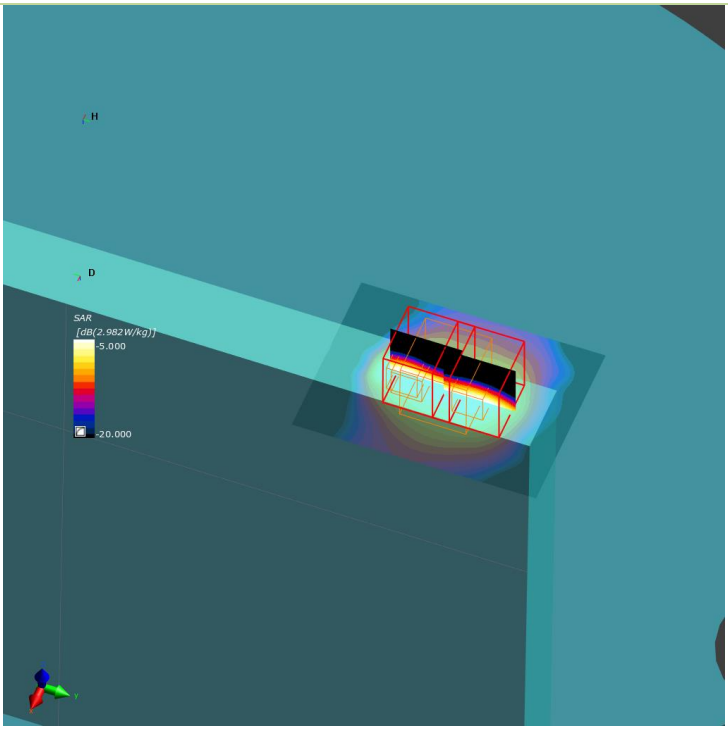

Printed copies are not controlled documents

4. U-NII-2A - 802.11n40, CH54, Aux Antenna – Top Edge

Device under Test Properties

Name, Manufacturer	Dimensions [mm]	WIFI MAC	DUT Type
P28T, DELL	304.0 x 210.0 x 24.0	E4:42:A6:F6:3A:1A	Convertible PC

Exposure Conditions

Phantom Section, TSL	Position, Test Distance [mm]	Band	Group, UID	Frequency [MHz], Channel Number	Conversion Factor	TSL Conductivity [S/m]	TSL Permittivity
Flat, MuscleSimulating Liquid	EDGE TOP, 0	WLAN 5GHz	WLAN, 10114-CAB	5270.0, 54	4.75	5.52	44.7

Hardware Setup

Phantom	TSL, Measured Date	Probe, Calibration Date	DAE, Calibration Date
ELI V8.0 (20deg probe tilt) - 2059	MBBL-600-6000v5, 2017-Dec-29	EX3DV4 - SN7455, 2017-07-04	DAE4 Sn1519, 2017-07-12

Scan Setup

	Area Scan	Zoom Scan
Grid Extents [mm]	60.0 x 80.0	22.0 x 22.0 x 22.0
Grid Steps [mm]	10.0 x 10.0	4.0 x 4.0 x 1.4
Sensor Surface [mm]	3.0	1.4
Graded Grid	No	Yes
Grading Ratio	n/a	1.4
MAIA	Confirmed by MAIA	Confirmed by MAIA
Surface Detection	Yes	Yes
Scan Method	Measured	Measured

Measurement Results

	Area Scan	Zoom Scan
Date	2017-12-29, 14:21	2017-12-29, 14:33
SAR 1g [W/Kg]	**1.17**	**1.100**
SAR 10g [W/Kg]	**0.342**	**0.293**
Power Drift [dB]	0.03	0.03
Power Scaling	Disabled	Disabled
Scaling Factor [dB]		
TSL Correction	No correction	No correction

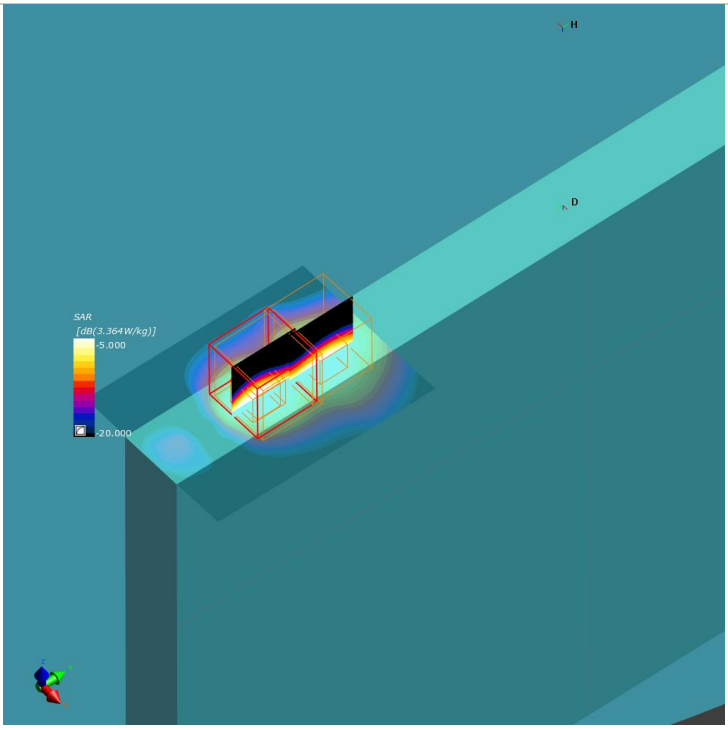

Printed copies are not controlled documents

5. U-NII-2C - 802.11n40, CH110, Main Antenna – Top Edge

Device under Test Properties

Name, Manufacturer	Dimensions [mm]	WIFI MAC	DUT Type
P28T, DELL	304.0 x 210.0 x 24.0	E4:42:A6:F6:3A:1A	Convertible PC

Exposure Conditions

Phantom Section, TSL	Position, Test Distance [mm]	Band	Group, UID	Frequency [MHz], Channel Number	Conversion Factor	TSL Conductivity [S/m]	TSL Permittivity
Flat, MuscleSimulating Liquid	EDGE TOP, 0	WLAN 5GHz	WLAN, 10114-CAB	5550.0, 110	4.1	5.89	44.1

Hardware Setup

Phantom	TSL, Measured Date	Probe, Calibration Date	DAE, Calibration Date
ELI V8.0 (20deg probe tilt) - 2059	MBBL-600-6000v5, 2017-Dec-29	EX3DV4 - SN7455, 2017-07-04	DAE4 Sn1519, 2017-07-12

Scan Setup

	Area Scan	Zoom Scan
Grid Extents [mm]	60.0 x 80.0	22.0 x 22.0 x 22.0
Grid Steps [mm]	10.0 x 10.0	4.0 x 4.0 x 1.4
Sensor Surface [mm]	3.0	1.4
Graded Grid	No	Yes
Grading Ratio	n/a	1.4
MAIA	Confirmed by MAIA	Confirmed by MAIA
Surface Detection	Yes	Yes
Scan Method	Measured	Measured

Measurement Results

	Area Scan	Zoom Scan
Date	2017-12-29, 16:58	2017-12-29, 17:04
SAR 1g [W/Kg]	**0.871**	**0.769**
SAR 10g [W/Kg]	**0.288**	**0.222**
Power Drift [dB]	0.04	-0.03
Power Scaling	Disabled	Disabled
Scaling Factor [dB]		
TSL Correction	No correction	No correction

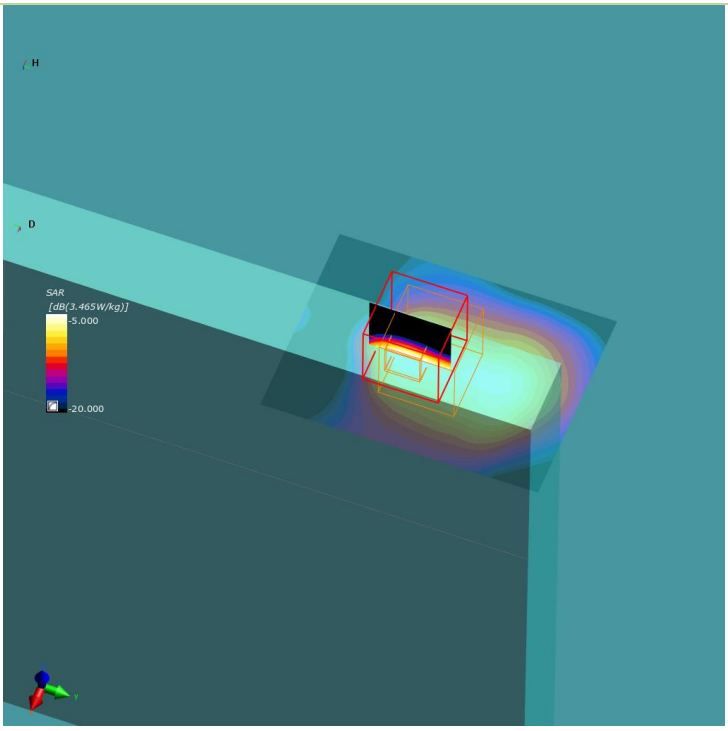

Printed copies are not controlled documents

6. U-NII-2C - 802.11n40, CH118, Aux Antenna – Top Edge

Device under Test Properties

Name, Manufacturer	Dimensions [mm]	WIFI MAC	DUT Type
P28T, DELL	304.0 x 210.0 x 24.0	E4:42:A6:F6:3A:1A	Convertible PC

Exposure Conditions

Phantom Section, TSL	Position, Test Distance [mm]	Band	Group, UID	Frequency [MHz], Channel Number	Conversion Factor	TSL Conductivity [S/m]	TSL Permittivity
Flat, MuscleSimulating Liquid	EDGE TOP, 0	WLAN 5GHz	WLAN, 10114-CAB	5590.0, 118	4.1	5.95	44.0

Hardware Setup

Phantom	TSL, Measured Date	Probe, Calibration Date	DAE, Calibration Date
ELI V8.0 (20deg probe tilt) - 2059	MBBL-600-6000v5, 2017-Dec-29	EX3DV4 - SN7455, 2017-07-04	DAE4 Sn1519, 2017-07-12

Scan Setup

	Area Scan	Zoom Scan
Grid Extents [mm]	60.0 x 80.0	22.0 x 22.0 x 22.0
Grid Steps [mm]	10.0 x 10.0	4.0 x 4.0 x 1.4
Sensor Surface [mm]	3.0	1.4
Graded Grid	No	Yes
Grading Ratio	n/a	1.4
MAIA	Confirmed by MAIA	Confirmed by MAIA
Surface Detection	Yes	Yes
Scan Method	Measured	Measured

Measurement Results

	Area Scan	Zoom Scan
Date	2017-12-29, 18:16	2017-12-29, 18:28
SAR 1g [W/Kg]	**1.06**	**0.977**
SAR 10g [W/Kg]	**0.349**	**0.255**
Power Drift [dB]	-0.19	-0.02
Power Scaling	Disabled	Disabled
Scaling Factor [dB]		
TSL Correction	No correction	No correction

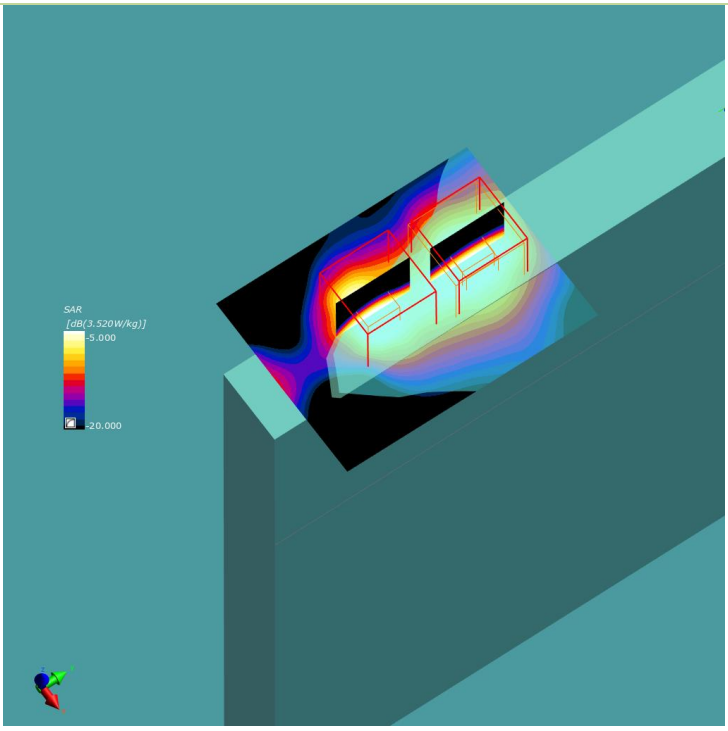

Printed copies are not controlled documents

7. U-NII-3 - 802.11n40, CH159, Main Antenna – Back Face

Device under Test Properties

Name, Manufacturer	Dimensions [mm]	WIFI MAC	DUT Type
P28T, DELL	304.0 x 210.0 x 24.0	E4:42:A6:F6:3A:1A	Convertible PC

Exposure Conditions

Phantom Section, TSL	Position, Test Distance [mm]	Band	Group, UID	Frequency [MHz], Channel Number	Conversion Factor	TSL Conductivity [S/m]	TSL Permittivity
Flat, MuscleSimulating Liquid	BACK (COVER), 0	WLAN 5GHz	WLAN, 10114-CAB	5795.0, 159	4.37	6.25	44.3

Hardware Setup

Phantom	TSL, Measured Date	Probe, Calibration Date	DAE, Calibration Date
ELI V8.0 (20deg probe tilt) - 2059	MBBL-600-6000v5, 2018-Jan-02	EX3DV4 - SN7455, 2017-07-04	DAE4 Sn1519, 2017-07-12

Scan Setup

	Area Scan	Zoom Scan
Grid Extents [mm]	60.0 x 80.0	22.0 x 22.0 x 22.0
Grid Steps [mm]	10.0 x 10.0	4.0 x 4.0 x 1.4
Sensor Surface [mm]	3.0	1.4
Graded Grid	No	Yes
Grading Ratio	n/a	1.4
MAIA	Confirmed by MAIA	Confirmed by MAIA
Surface Detection	Yes	Yes
Scan Method	Measured	Measured

Measurement Results

	Area Scan	Zoom Scan
Date	2018-01-02, 17:14	2018-01-02, 17:20
SAR 1g [W/Kg]	**0.842**	**0.846**
SAR 10g [W/Kg]	**0.320**	**0.304**
Power Drift [dB]	-0.00	-0.06
Power Scaling	Disabled	Disabled
Scaling Factor [dB]		
TSL Correction	No correction	No correction

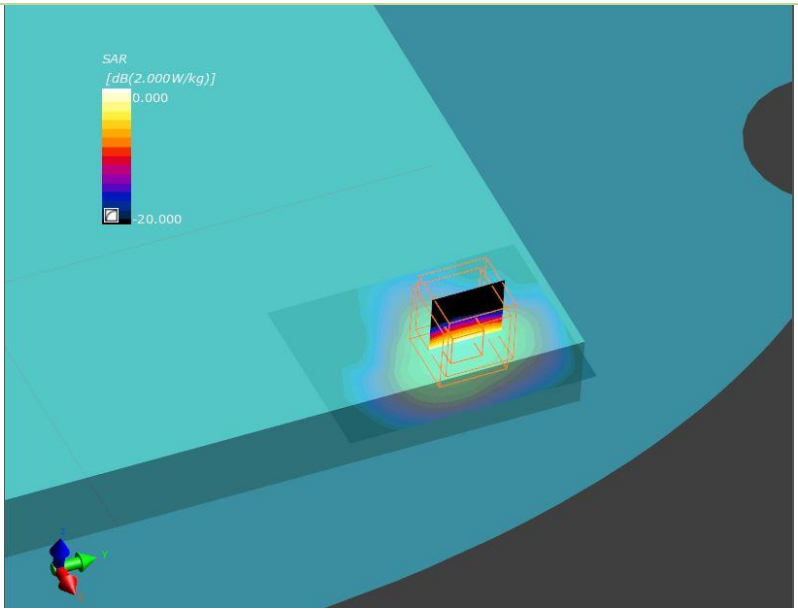

Printed copies are not controlled documents

8. U-NII-3 - 802.11n40, CH159, Aux Antenna – Top Edge

Device under Test Properties

Name, Manufacturer	Dimensions [mm]	WIFI MAC	DUT Type
P28T, DELL	304.0 x 210.0 x 24.0	E4:42:A6:F6:3A:1A	Convertible PC

Exposure Conditions

Phantom Section, TSL	Position, Test Distance [mm]	Band	Group, UID	Frequency [MHz], Channel Number	Conversion Factor	TSL Conductivity [S/m]	TSL Permittivity
Flat, MuscleSimulating Liquid	EDGE TOP, 0	WLAN 5GHz	WLAN, 10114-CAB	5795.0, 159	4.37	6.25	44.3

Hardware Setup

Phantom	TSL, Measured Date	Probe, Calibration Date	DAE, Calibration Date
ELI V8.0 (20deg probe tilt) - 2059	MBBL-600-6000v5, 2018-Jan-02	EX3DV4 - SN7455, 2017-07-04	DAE4 Sn1519, 2017-07-12

Scan Setup

	Area Scan	Zoom Scan
Grid Extents [mm]	60.0 x 80.0	22.0 x 22.0 x 22.0
Grid Steps [mm]	10.0 x 10.0	4.0 x 4.0 x 1.4
Sensor Surface [mm]	3.0	1.4
Graded Grid	No	Yes
Grading Ratio	n/a	1.4
MAIA	Confirmed by MAIA	Confirmed by MAIA
Surface Detection	Yes	Yes
Scan Method	Measured	Measured

Measurement Results

	Area Scan	Zoom Scan
Date	2018-01-02, 14:40	2018-01-02, 14:52
SAR 1g [W/Kg]	**0.734**	**0.671**
SAR 10g [W/Kg]	**0.243**	**0.187**
Power Drift [dB]	-0.10	-0.13
Power Scaling	Disabled	Disabled
Scaling Factor [dB]		
TSL Correction	No correction	No correction

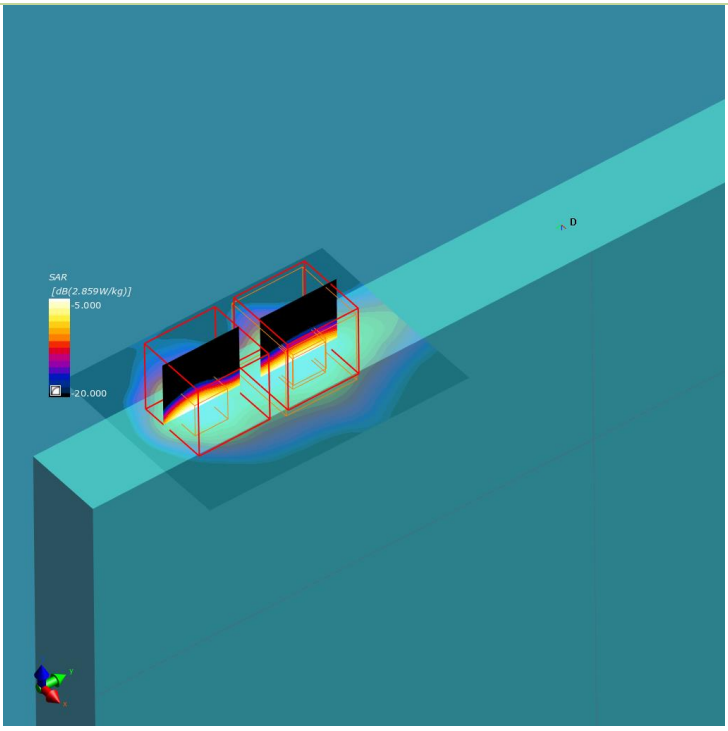

Printed copies are not controlled documents

9. System Check Body Liquid 2450MHz

Device under Test Properties

Name, Manufacturer	Dimensions [mm]	S/N	DUT Type
2.45 GHz Dipole, SPEAG	50.0 x 10.0 x 24.0	0937	Validation Dipole

Exposure Conditions

Phantom Section, TSL	Position, Test Distance [mm]	Band	Group, UID	Frequency [MHz], Channel Number	Conversion Factor	TSL Conductivity [S/m]	TSL Permittivity
Flat, MuscleSimulating Liquid	,		, 0--	2450.0, 0	7.3	2.10	50.8

Hardware Setup

Phantom	TSL, Measured Date	Probe, Calibration Date	DAE, Calibration Date
ELI V8.0 (20deg probe tilt) - 2059	MBBL-600-6000v5, 2018-Jan-02	EX3DV4 - SN7455, 2017-07-04	DAE4 Sn1519, 2017-07-12

Scan Setup

	Area Scan	Zoom Scan
Grid Extents [mm]	48.0 x 96.0	30.0 x 30.0 x 30.0
Grid Steps [mm]	12.0 x 12.0	5.0 x 5.0 x 5.0
Sensor Surface [mm]	3.0	1.4
Graded Grid	No	No
Grading Ratio	n/a	n/a
MAIA	MAIA not used	MAIA not used
Surface Detection	Mother Scan	6-point verification
Scan Method	Measured	Measured

Measurement Results

	Area Scan	Zoom Scan
Date	2018-01-02, 20:23	2018-01-02, 20:30
SAR 1g [W/Kg]	**2.60**	**2.59**
SAR 10g [W/Kg]	**1.19**	**1.20**
Power Drift [dB]	0.01	0.01
Power Scaling	Disabled	Disabled
Scaling Factor [dB]		
TSL Correction	No correction	No correction

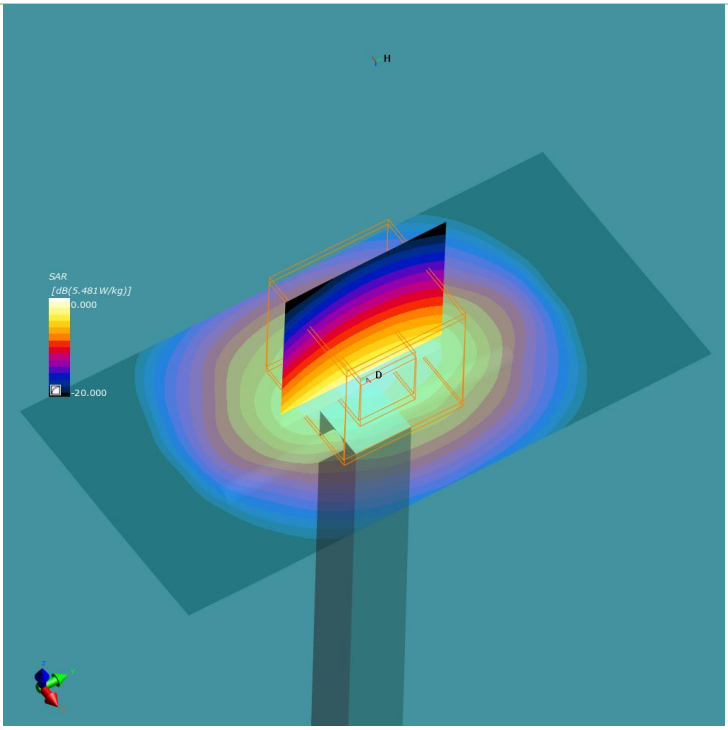

Printed copies are not controlled documents

10. System Check Body Liquid 5300MHz

Device under Test Properties

Name, Manufacturer	Dimensions [mm]	S/N	DUT Type
5GHz Dipole, SPEAG	50.0 x 10.0 x 23.0	1259	Validation Dipole

Exposure Conditions

Phantom Section, TSL	Position, Test Distance [mm]	Band	Group, UID	Frequency [MHz], Channel Number	Conversion Factor	TSL Conductivity [S/m]	TSL Permittivity
Flat, MuscleSimulating Liquid	,		, 0--	5300.0, 0	4.75	5.56	44.6

Hardware Setup

Phantom	TSL, Measured Date	Probe, Calibration Date	DAE, Calibration Date
ELI V8.0 (20deg probe tilt) - 2059	MBBL-600-6000v5, 2017-Dec-29	EX3DV4 - SN7455, 2017-07-04	DAE4 Sn1519, 2017-07-12

Scan Setup

	Area Scan	Zoom Scan
Grid Extents [mm]	40.0 x 80.0	22.0 x 22.0 x 22.0
Grid Steps [mm]	10.0 x 10.0	4.0 x 4.0 x 1.4
Sensor Surface [mm]	3.0	1.4
Graded Grid	No	Yes
Grading Ratio	n/a	1.4
MAIA	MAIA not used	MAIA not used
Surface Detection	Mother Scan	6-point verification
Scan Method	Measured	Measured

Measurement Results

	Area Scan	Zoom Scan
Date	2017-12-29, 18:36	2017-12-29, 18:42
SAR 1g [W/Kg]	**4.21**	**3.86**
SAR 10g [W/Kg]	**1.18**	**1.09**
Power Drift [dB]	0.03	0.04
Power Scaling	Disabled	Disabled
Scaling Factor [dB]		
TSL Correction	No correction	No correction

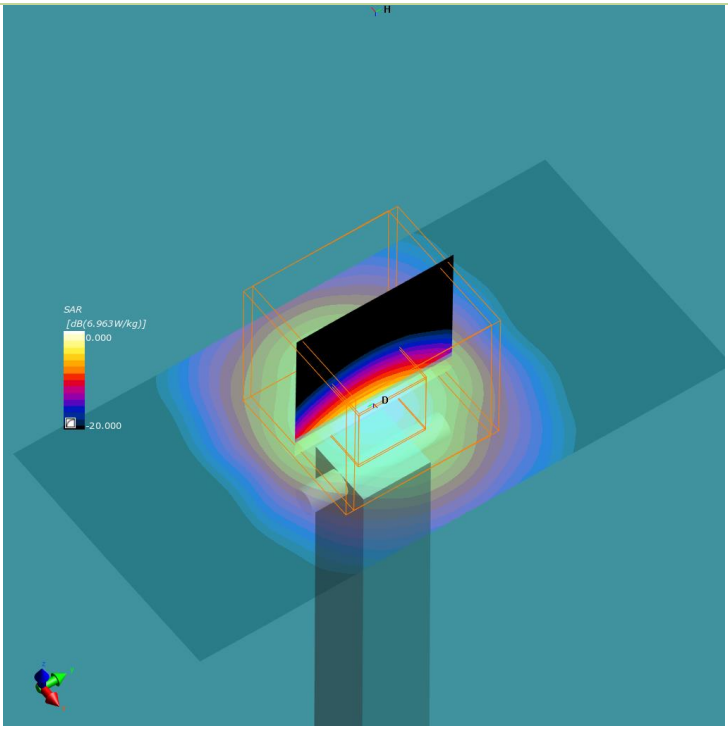

Printed copies are not controlled documents

11. System Check Body Liquid 5600MHz

Device under Test Properties

Name, Manufacturer	Dimensions [mm]	IMEI	DUT Type
5GHz Dipole, SPEAG	50.0 x 10.0 x 23.0	1259	Validation Dipole

Exposure Conditions

Phantom Section, TSL	Position, Test Distance [mm]	Band	Group, UID	Frequency [MHz], Channel Number	Conversion Factor	TSL Conductivity [S/m]	TSL Permittivity
Flat, MuscleSimulating Liquid	,		, 0--	5600.0, 0	4.1	5.97	44.0

Hardware Setup

Phantom	TSL, Measured Date	Probe, Calibration Date	DAE, Calibration Date
ELI V8.0 (20deg probe tilt) - 2059	MBBL-600-6000v5, 2017-Dec-29	EX3DV4 - SN7455, 2017-07-04	DAE4 Sn1519, 2017-07-12

Scan Setup

	Area Scan	Zoom Scan
Grid Extents [mm]	40.0 x 80.0	22.0 x 22.0 x 22.0
Grid Steps [mm]	10.0 x 10.0	4.0 x 4.0 x 1.4
Sensor Surface [mm]	3.0	1.4
Graded Grid	No	Yes
Grading Ratio	n/a	1.4
MAIA	MAIA not used	MAIA not used
Surface Detection	Mother Scan	6-point verification
Scan Method	Measured	Measured

Measurement Results

	Area Scan	Zoom Scan
Date	2017-12-29, 19:16	2017-12-29, 19:22
SAR 1g [W/Kg]	**4.30**	**3.86**
SAR 10g [W/Kg]	**1.23**	**1.13**
Power Drift [dB]	0.05	-0.04
Power Scaling	Disabled	Disabled
Scaling Factor [dB]		
TSL Correction	No correction	No correction

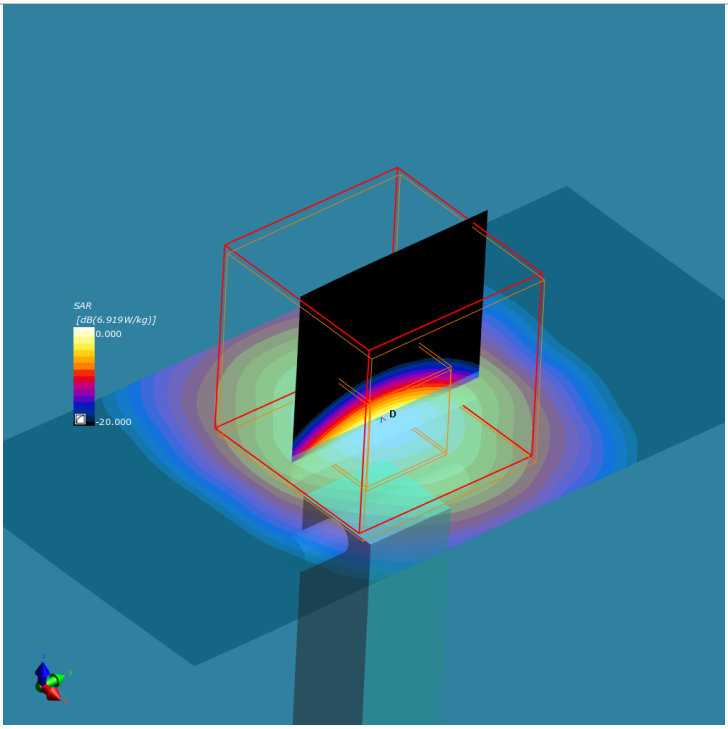

Printed copies are not controlled documents

12. System Check Body Liquid 5800MHz

Device under Test Properties

Name, Manufacturer	Dimensions [mm]	IMEI	DUT Type
5GHz Dipole, SPEAG	50.0 x 10.0 x 23.0	1259	Validation Dipole

Exposure Conditions

Phantom Section, TSL	Position, Test Distance [mm]	Band	Group, UID	Frequency [MHz], Channel Number	Conversion Factor	TSL Conductivity [S/m]	TSL Permittivity
Flat, MuscleSimulating Liquid	,		, 0--	5800.0, 0	4.37	6.26	43.5

Hardware Setup

Phantom	TSL, Measured Date	Probe, Calibration Date	DAE, Calibration Date
ELI V8.0 (20deg probe tilt) - 2059	MBBL-600-6000v5, 2017-Dec-29	EX3DV4 - SN7455, 2017-07-04	DAE4 Sn1519, 2017-07-12

Scan Setup

	Area Scan	Zoom Scan
Grid Extents [mm]	40.0 x 80.0	22.0 x 22.0 x 22.0
Grid Steps [mm]	10.0 x 10.0	4.0 x 4.0 x 1.4
Sensor Surface [mm]	3.0	1.4
Graded Grid	No	Yes
Grading Ratio	n/a	1.4
MAIA	MAIA not used	MAIA not used
Surface Detection	Mother Scan	6-point verification
Scan Method	Measured	Measured

Measurement Results

	Area Scan	Zoom Scan
Date	2018-01-02, 20:12	2018-01-02, 20:19
SAR 1g [W/Kg]	**3.61**	**3.41**
SAR 10g [W/Kg]	**1.05**	**1.01**
Power Drift [dB]	0.04	0.01
Power Scaling	Disabled	Disabled
Scaling Factor [dB]		
TSL Correction	No correction	No correction

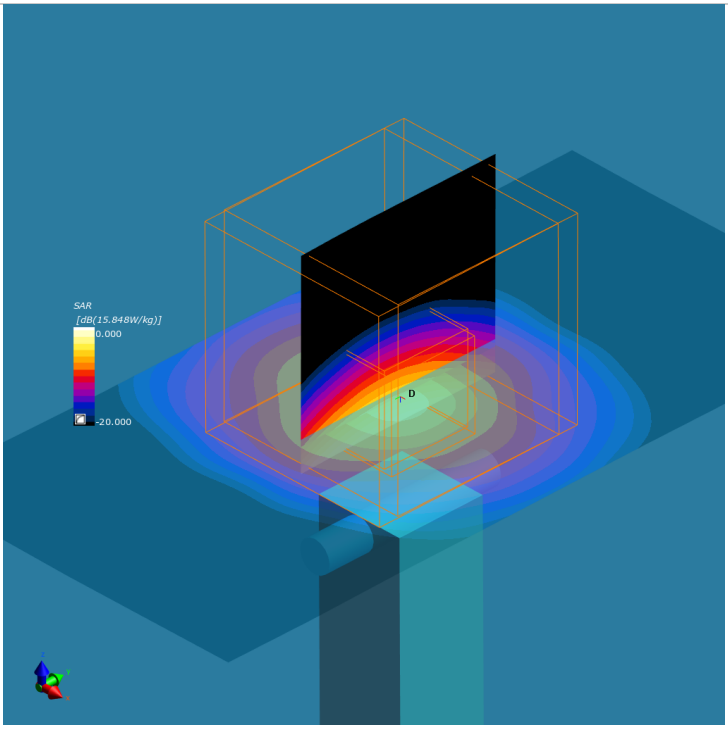

Printed copies are not controlled documents

Annex D. TSL Dielectric Parameters

D.1 Body DTS 2450MHz

Freq. (MHz)	Target		2018-01-02 Measured	
	ε' (F/m)	σ (S/m)	ε' (F/m)	σ (S/m)
2400	52.77	1.90	50.85	2.05
2410	52.75	1.91	50.83	2.06
2420	52.74	1.92	50.81	2.07
2430	52.73	1.93	50.79	2.08
2440	52.71	1.94	50.77	2.09
2450	**52.70**	**1.95**	50.76	2.10
2460	52.69	1.96	50.74	2.11
2470	52.67	1.98	50.72	2.12
2480	52.66	1.99	50.70	2.13
2490	52.65	2.01	50.68	2.14
2500	52.64	2.02	50.66	2.15

Permittivity

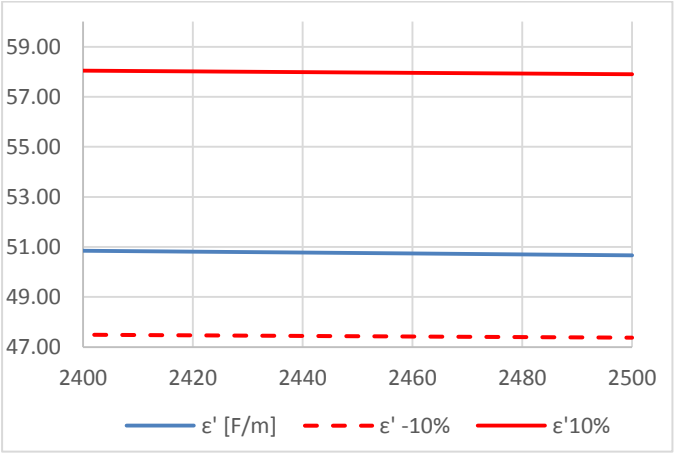

Conductivity

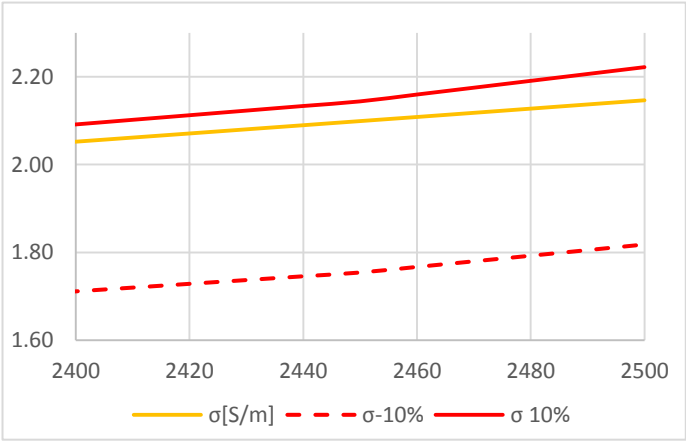

Printed copies are not controlled documents

D.2 Body 5200MHz-5800MHz

Freq. (MHz)	Target		2017-12-29 Measured		2018-01-02 Measured	
	ε' (F/m)	σ (S/m)	ε' (F/m)	σ (S/m)	ε_1' (F/m)	σ_1 (S/m)
5200	**49.01**	**5.30**	44.73	5.41	45.50	5.40
5210	49.00	5.31	44.72	5.43	45.48	5.41
5220	48.99	5.32	44.71	5.44	45.46	5.43
5230	48.97	5.33	44.70	5.46	45.45	5.44
5240	48.96	5.34	44.69	5.47	45.43	5.46
5250	48.95	5.36	44.69	5.49	45.41	5.47
5260	48.93	5.37	44.68	5.50	45.38	5.48
5270	48.92	5.38	44.67	5.52	45.36	5.50
5280	48.91	5.39	44.66	5.53	45.35	5.51
5290	48.89	5.40	44.65	5.54	45.33	5.52
5300	**48.88**	**5.41**	44.64	5.56	45.31	5.53
5310	48.87	5.43	44.63	5.57	45.29	5.55
5320	48.85	5.44	44.61	5.58	45.27	5.56
5330	48.84	5.45	44.60	5.59	45.26	5.57
5340	48.82	5.46	44.58	5.61	45.24	5.58
5350	48.81	5.47	44.57	5.62	45.22	5.60
5360	48.80	5.48	44.55	5.63	45.20	5.61
5370	48.78	5.50	44.53	5.64	45.18	5.62
5380	48.77	5.51	44.51	5.65	45.16	5.63
5390	48.76	5.52	44.49	5.66	45.14	5.65
5400	48.74	5.53	44.48	5.67	45.12	5.66
5500	**48.61**	**5.65**	44.21	5.80	44.90	5.80
5510	48.59	5.66	44.18	5.81	44.88	5.81
5520	48.58	5.67	44.15	5.83	44.86	5.83
5530	48.57	5.68	44.13	5.85	44.83	5.84
5540	48.55	5.69	44.10	5.87	44.81	5.85
5550	48.54	5.71	44.07	5.89	44.79	5.87
5560	48.53	5.72	44.05	5.90	44.77	5.89
5570	48.51	5.73	44.03	5.92	44.76	5.90
5580	48.50	5.74	44.01	5.93	44.74	5.92
5590	48.49	5.75	43.99	5.95	44.72	5.94
5600	**48.47**	**5.76**	43.97	5.97	44.70	5.95
5610	48.46	5.78	43.94	5.99	44.68	5.97
5620	48.44	5.79	43.93	6.00	44.66	5.98
5630	48.43	5.80	43.91	6.02	44.63	6.00
5640	48.42	5.81	43.89	6.04	44.61	6.01
5650	48.40	5.82	43.87	6.06	44.59	6.03
5660	48.39	5.83	43.84	6.08	44.57	6.04
5670	48.38	5.85	43.82	6.09	44.55	6.06
5680	48.36	5.86	43.79	6.11	44.53	6.07
5690	48.35	5.87	43.76	6.12	44.51	6.09
5700	48.34	5.88	43.74	6.13	44.49	6.11
5710	48.32	5.88	43.72	6.15	44.47	6.12
5720	48.31	5.89	43.70	6.16	44.45	6.14
5730	48.30	5.91	43.68	6.18	44.42	6.15
5740	48.28	5.92	43.65	6.19	44.40	6.17
5750	48.27	5.93	43.63	6.20	44.37	6.18
5760	48.25	5.94	43.60	6.22	44.35	6.20
5770	48.24	5.95	43.58	6.23	44.33	6.21
5780	48.23	5.96	43.55	6.24	44.31	6.23
5790	48.21	5.98	43.52	6.25	44.28	6.24
5800	**48.20**	**5.99**	43.50	6.26	44.26	6.26

Printed copies are not controlled documents

Permittivity

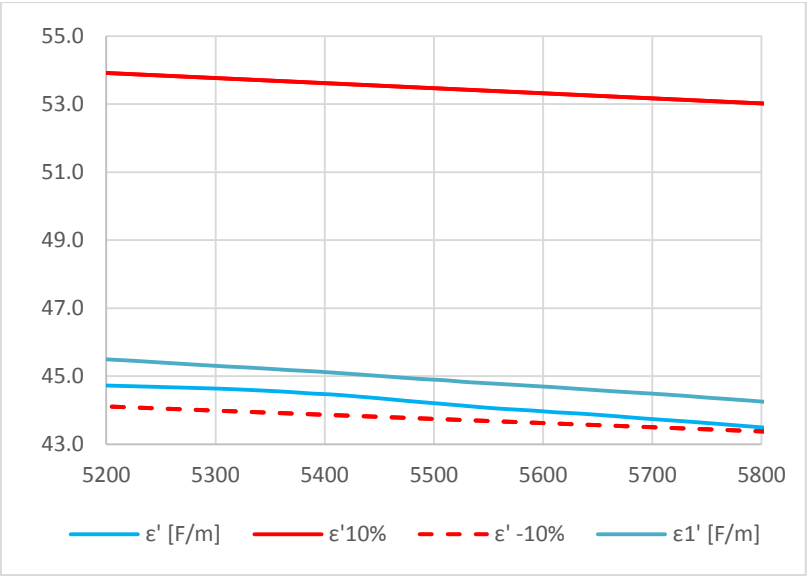

Conductivity

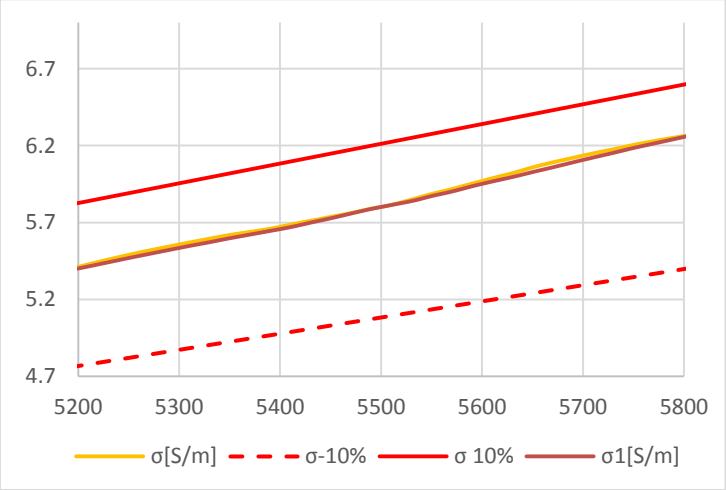

Printed copies are not controlled documents

Annex E. Calibration Certificates

ID	Device	Type/Model	Serial Number	Manufacturer	Calibration Certificate
0647	Dosimetric E-field Probe	EX3DV4	7455	SPEAG	
0239	2450MHz System Validation Dipole	D2450V2	937	SPEAG	
0591	5GHz System Validation Dipole	D5GHzV2	1259	SPEAG	

Dipole calibration

According to the KDB 865664 D01, a dipole must be calibrated using a fully validated SAR system according to the tissue dielectric parameters and SAR probe calibration frequency required for device testing. However, instead of the typical annual calibration recommended by measurement standards, longer calibration intervals of up to three years may be considered when it is demonstrated that the SAR target, impedance and return loss of a dipole have remain stable according to the following requirements.

1. When the most recent return-loss result, measured at least annually, deviates by more than 20% from the previous measurement (i.e. value in dB × 0.2) or not meeting the required 20 dB minimum return-loss requirement.

2. When the most recent measurement of the real or imaginary parts of the impedance, measured at least annually, deviates by more than 5 Ω from the previous measurement

Printed copies are not controlled documents

The below results show the latest return loss and impedance measurements for each dipole performed by the lab:

Dipole ID #0239			
Dipole 2450MHz Body TSL			
	Return Loss [dB]	Impedance [Ω]	Date
Previous	-26.30	51.1 + 4.8 j	2016-06-20
Last	-28.82	47.5 – 2.5 j	2017-03-17
Dipole ID #0591			
Dipole 5200MHz Body TSL			
	Return Loss [dB]	Impedance [Ω]	Date
Last	-32.5	49.7 – 2.4 j	2017-04-26
Dipole 5300MHz Body TSL			
	Return Loss [dB]	Impedance [Ω]	Date
Last	-28.4	46.4 + 0.5 j	2017-04-26
Dipole 5500MHz Body TSL			
	Return Loss [dB]	Impedance [Ω]	Date
Last	-27.6	46.2 + 1.1 j	2017-04-26
Dipole 5600MHz Body TSL			
	Return Loss [dB]	Impedance [Ω]	Date
Last	-25.6	49.0 – 5.1 j	2017-04-26
Dipole 5800MHz Body TSL			
	Return Loss [dB]	Impedance [Ω]	Date
Last	-24.1	48.2 – 5.9 j	2017-04-26

Printed copies are not controlled documents