User Guide

© Copyright 2017 HP Development Company, L.P.

Bluetooth is a trademark owned by its proprietor and used by HP Inc. under license. Windows is either a registered trademark or trademark of Microsoft Corporation in the United States and/or other countries.

The information contained herein is subject to change without notice. The only warranties for HP products and services are set forth in the express warranty statements accompanying such products and services. Nothing herein should be construed as constituting an additional warranty. HP shall not be liable for technical or editorial errors or omissions contained herein.

First Edition: March 2017

Document Part Number: 917718-001

Product notice

This guide describes features that are common to most products. Some features may not be available on your computer.

Not all features are available in all editions or versions of Windows. Systems may require upgraded and/or separately purchased hardware, drivers, software or BIOS update to take full advantage of Windows functionality. Windows 10 is automatically updated, which is always enabled. ISP fees may apply and additional requirements may apply over time for updates. Go to http://www.microsoft.com for details.

To access the latest user guides or manuals for your product, go to http://www.hp.com/support, and select your country. Select **Find your product**, and then follow the on-screen instructions.

Software terms

By installing, copying, downloading, or otherwise using any software product preinstalled on this computer, you agree to be bound by the terms of the HP End User License Agreement (EULA). If you do not accept these license terms, your sole remedy is to return the entire unused product (hardware and software) within 14 days for a full refund subject to the refund policy of your seller.

For any further information or to request a full refund of the price of the computer, please contact your seller.

Safety warning notice

WARNING! To reduce the possibility of heat-related injuries or of overheating the computer, do not place the computer directly on your lap or obstruct the computer air vents. Use the computer only on a hard, flat surface. Do not allow another hard surface, such as an adjoining optional printer, or a soft surface, such as pillows or rugs or clothing, to block airflow. Also, do not allow the AC adapter to come into contact with the skin or a soft surface, such as pillows or rugs or clothing, during operation. The computer and the AC adapter comply with the user-accessible surface temperature limits defined by the International Standard for Safety of Information Technology Equipment (IEC 60950-1).

Table of contents

1 Starting right 1

Best practices 1

More HP resources 2

2 Getting to know your computer 3

Locating hardware 3

Locating software 3

Right side 4

Left side 4

Front 6

Top 7

Bottom 8

Rear 9

Using the kickstand 10

Keyboard (select products only) 11

Connecting the keyboard 11

Removing the keyboard 12

TouchPad 12

Lights 13

Special keys 14

Action keys 14

Labels 15

Using the microSD memory card reader 16

Inserting a microSD memory card 16

Removing a microSD memory card 17

3 Connecting to a network 19

Connecting to a wireless network 19

Using the wireless controls 19

Airplane mode key 19

Operating system controls 19

Connecting to a WLAN 20

Using HP Mobile Broadband (select products only) 20

Using GPS (select products only) 21

Using Bluetooth wireless devices (select products only) 21

Connecting Bluetooth devices 21

Connecting to a wired network—LAN (select products only) 21
Connecting to your mobile device (select products only) 22

4 Enjoying entertainment features 24
Using the camera 24
Using audio 24
Connecting speakers 24
Connecting headphones 24
Connecting headsets 25
Using sound settings 25
Using video 25
Discovering and connecting to Miracast-compatible wireless displays (select products only) 26

5 Navigating the screen 27
Using TouchPad and touch screen gestures 27
Tap 27
Two-finger pinch zoom 27
Two-finger slide (TouchPad only) 28
Two-finger tap (TouchPad only) 28
Four-finger tap (TouchPad only) 28
Three-finger swipe (TouchPad only) 29
One-finger slide (touch screen only) 29
Using an optional keyboard and mouse 29
Using the on-screen keyboard 30

6 Managing power 31
Using Sleep and Hibernation 31
Initiating and exiting Sleep 31
Initiating and exiting Hibernation (select products only) 32
Shutting down (turning off) the computer 32
Using the Power icon and Power Options 33
Running on battery power 33
Using HP Fast Charge (select products only) 33
Displaying battery charge 34
Finding battery information in HP Support Assistant (select products only) 34
Conserving battery power 34
Identifying low battery levels 34
Resolving a low battery level 35
Resolving a low battery level when external power is available 35
Resolving a low battery level when no power source is available 35

Resolving a low battery level when the computer cannot exit Hibernation 35
Factory-sealed battery 35
Running on external power 35

7 Maintaining your computer 37
Improving performance 37
Using Disk Defragmenter 37
Using Disk Cleanup 37
Using HP 3D DriveGuard (select products only) 37
Identifying HP 3D DriveGuard status 38
Updating programs and drivers 38
Cleaning your computer 38
Cleaning procedures 38
Cleaning the display 39
Cleaning the sides or cover 39
Cleaning the TouchPad, keyboard, or mouse (select products only) 39
Traveling with or shipping your computer 39

8 Securing your computer and information 41
Using passwords 41
Setting Windows passwords 41
Setting Setup Utility (BIOS) passwords 42
Using Windows Hello (select products only) 42
Using Internet security software 43
Using antivirus software 43
Using firewall software 43
Installing software updates 43
Using HP Touchpoint Manager (select products only) 44
Securing your wireless network 44
Backing up your software applications and information 44
Using an optional security cable (select products only) 44

9 Using Setup Utility (BIOS) 45
Starting Setup Utility (BIOS) 45
Updating Setup Utility (BIOS) 45
Determining the BIOS version 45
Downloading a BIOS update 46

10 Using HP PC Hardware Diagnostics (UEFI) 47
Downloading HP PC Hardware Diagnostics (UEFI) to a USB device 47

11 Backing up, restoring, and recovering 49
Creating recovery media and backups 49
Creating HP Recovery media (select products only) 49
Using Windows tools 50
Restore and recovery 51
Recovering using HP Recovery Manager 51
What you need to know before you get started 51
Using the HP Recovery partition (select products only) 52
Using HP Recovery media to recover 52
Changing the computer boot order 53
Removing the HP Recovery partition (select products only) 54

12 Specifications 55
Input power 55
Operating environment 56

13 Electrostatic Discharge 57

14 Accessibility 58
Supported assistive technologies 58
Contacting support 58

Index 59

1 Starting right

This computer is a powerful tool designed to enhance your work and entertainment. Read this chapter to learn about best practices after you set up your computer, fun things to do with your computer, and where to find additional HP resources.

Best practices

After you set up and register the computer, we recommend the following steps to get the most out of your smart investment:

- Back up your hard drive by creating recovery media. See Backing up, restoring, and recovering on page 49.
- If you haven't already done so, connect to a wired or wireless network. See details in Connecting to a network on page 19.
- Become familiar with the computer hardware and software. For more information, see Getting to know your computer on page 3 and Enjoying entertainment features on page 24.
- Update or purchase antivirus software. See Using antivirus software on page 43.

More HP resources

To locate resources that provide product details, how-to information, and more, use this table.

Resource	Contents
Setup Instructions	• Overview of computer setup and features
HP support For HP support, go to http://www.hp.com/support.	• Online chat with an HP technician • Support telephone numbers • HP service center locations
Safety & Comfort Guide To access this guide: ▲ Select the **Start** button, select **HP Help and Support**, and then select **HP Documentation**. – or – ▲ Select the **Start** button, select **HP**, and then select **HP Documentation**. – or – ▲ Go to http://www.hp.com/ergo. **IMPORTANT:** You must be connected to the Internet to access the latest version of the user guide.	• Proper workstation setup • Guidelines for posture and work habits that increase your comfort and decrease your risk of injury • Electrical and mechanical safety information
Regulatory, Safety and Environmental Notices To access this document: ▲ Select the **Start** button, select **HP Help and Support**, and then select **HP Documentation**. – or – ▲ Select the **Start** button, select **HP**, and then select **HP Documentation**.	• Important regulatory notices, including information about proper battery disposal, if needed.
*Limited Warranty** To access this document: ▲ Select the **Start** button, select **HP Help and Support**, and then select **HP Documentation**. – or – ▲ Select the **Start** button, select **HP**, and then select **HP Documentation**. – or – ▲ Go to http://www.hp.com/go/orderdocuments. **IMPORTANT:** You must be connected to the Internet to access the latest version of the user guide.	• Specific warranty information about this computer

*You can find your HP Limited Warranty located with the user guides on your product and/or on the CD or DVD provided in the box. In some countries or regions, HP may provide a printed warranty in the box. For countries or regions where the warranty is not provided in printed format, you can request a copy from http://www.hp.com/go/orderdocuments. For products purchased in Asia Pacific, you can write to HP at POD, PO Box 161, Kitchener Road Post Office, Singapore 912006. Include your product name, and your name, phone number, and postal address.

2 Getting to know your computer

Locating hardware

To find out what hardware is installed on your computer:

▲ Type `device manager` in the taskbar search box, and then select the **Device Manager** app.

A list displays all the devices installed on your computer.

For information about system hardware components and the system BIOS version number, press fn+esc (select products only).

Locating software

To find out what software is installed on your computer:

▲ Select the **Start** button.

– or –

Right-click the **Start** button, and then select **Programs and Features**.

Right side

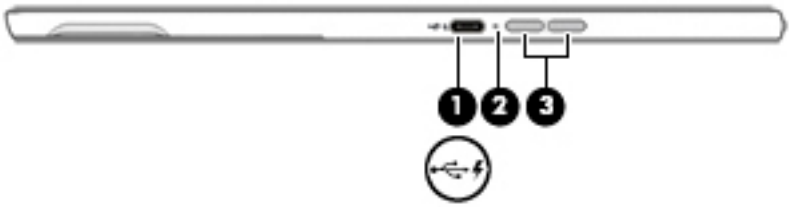

Component			Description
(1)		USB Type-C power connector and charging port	Connects an AC adapter that has a USB Type-C connector, supplying power to the computer and, if needed, charging the computer battery. – or – Connects and charges a USB device that has a Type-C connector, such as a cell phone, camera, activity tracker, or smartwatch, and provides high-speed data transfer. – or – Connects to various USB, video, HDMI, and LAN devices. **NOTE:** Cables and/or adapters (purchased separately) may be required.
(2)		AC adapter and battery light	• White: The AC adapter is connected and the battery is fully charged. • Blinking white: The AC adapter is disconnected and the battery has reached a low battery level. • Amber: The AC adapter is connected and the battery is charging. • Off: The battery is not charging.
(3)		Volume buttons	Control speaker volume on the computer.

template text updated for these ports

Left side

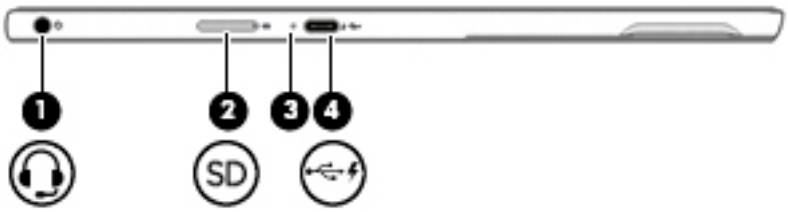

Component			Description
(1)		Audio-out (headphone)/Audio-in (microphone) combo jack	Connects optional powered stereo speakers, headphones, earbuds, a headset, or a television audio cable. Also connects an optional headset microphone. This jack does not support optional standalone microphones.

Component			Description
			WARNING! To reduce the risk of personal injury, adjust the volume before putting on headphones, earbuds, or a headset. For additional safety information, refer to the *Regulatory, Safety, and Environmental Notices*. To access this guide: ▲ Select the **Start** button, select **HP Help and Support**, and then select **HP Documentation**. **NOTE:** When a device is connected to the jack, the computer speakers are disabled.
(2)	SD	MicroSD memory card reader	Reads optional memory cards that store, manage, share, or access information. For installation instructions, see Using the microSD memory card reader on page 16.
(3)		AC adapter and battery light	• White: The AC adapter is connected and the battery is fully charged. • Blinking white: The AC adapter is disconnected and the battery has reached a low battery level. • Amber: The AC adapter is connected and the battery is charging. • Off: The battery is not charging.
(4)		USB Type-C power connector and charging port template text updated for these ports	Connects an AC adapter that has a USB Type-C connector, supplying power to the computer and, if needed, charging the computer battery. – or – Connects and charges a USB device that has a Type-C connector, such as a cell phone, camera, activity tracker, or smartwatch, and provides high-speed data transfer. – or – Connects to various USB, video, HDMI, and LAN devices. **NOTE:** Cables and/or adapters (purchased separately) may be required.

Front

confirm WLAN antennas location still correct

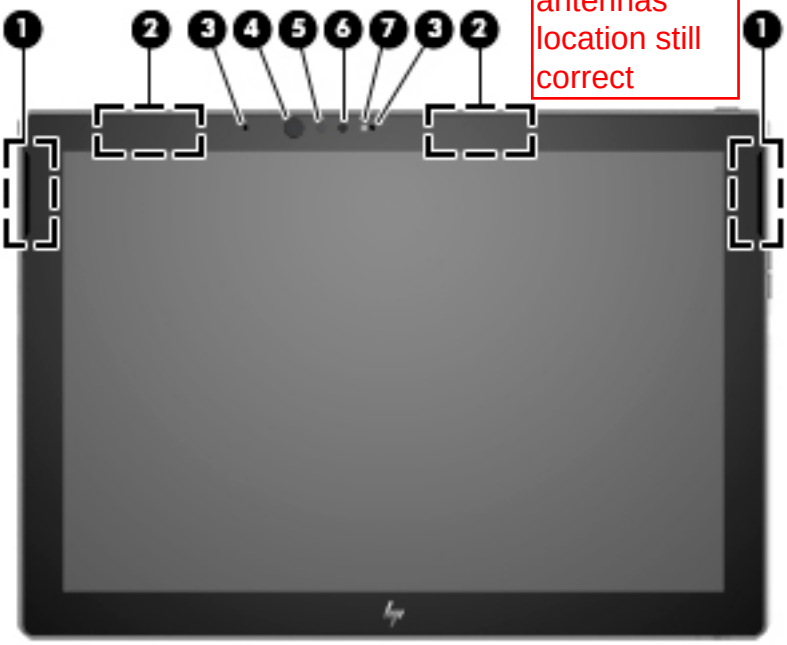

Component		Description
(1)	Speakers	Produce sound.
(2)	WLAN antennas*	Send and receive wireless signals to communicate with wireless local area networks (WLANs).
(3)	Internal microphones	Record sound.
(4)	Infrared camera light	On: The infrared camera is in use.
(5)	Infrared camera	Allows a facial recognition logon to Windows®, instead of a password logon. For more information, see Using Windows Hello (select products only) on page 42.
(6)	Camera	Allows you to video chat, record video, and record still images. To use your camera, see Using the camera on page 24.
(7)	Camera light	On: The camera is in use.

*The antennas are not visible from the outside of the computer, and antenna location varies. For optimal transmission, keep the areas immediately around the antennas free from obstructions.

For wireless regulatory notices, see the section of the *Regulatory, Safety, and Environmental Notices* that applies to your country or region.

To access this guide:

▲ Select the **Start** button, select **HP Help and Support**, and then select **HP Documentation**.

Top

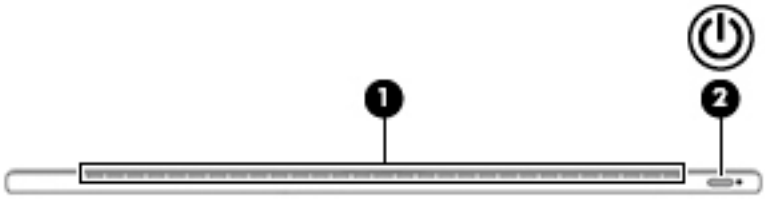

Component		Description
(1)	Vents	Enable airflow to cool internal components. **NOTE:** The computer fan starts up automatically to cool internal components and prevent overheating. It is normal for the internal fan to cycle on and off during routine operation.
(2)	Power button	• When the computer is off, press the button to turn on the computer. • When the computer is on, press the button briefly to initiate Sleep. • When the computer is in the Sleep state, press the button briefly to exit Sleep. • When the computer is in Hibernation, press the button briefly to exit Hibernation. **CAUTION:** Pressing and holding down the power button results in the loss of unsaved information. If the computer has stopped responding and shutdown procedures are ineffective, press and hold the power button down for at least 5 seconds to turn off the computer. To learn more about your power settings, see your power options. ▲ Type `power` in the taskbar search box, and then select **Power & sleep settings**. – or – Right-click the **Start** button, and then select **Power Options**.

Bottom

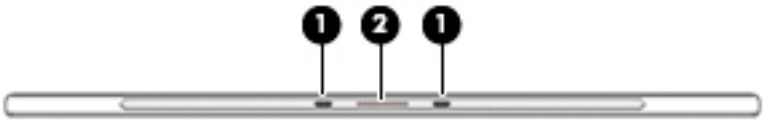

Component		Description
(1)	Alignment post connectors (2)	Connect to the alignment posts on the keyboard.
(2)	Docking connector	Connects the tablet to the keyboard.

Rear

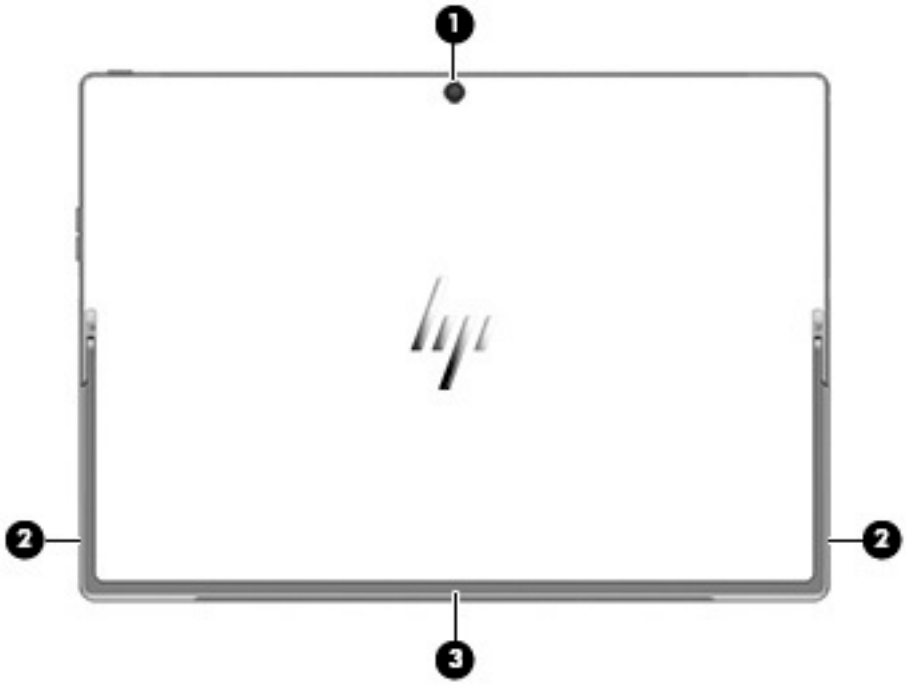

Component		Description
(1)	Rear camera	Allows you to video chat, record video, and record still images. To use your camera, see Using the camera on page 24.
(2)	Kickstand tabs (2)	Provide access to lift the kickstand away from the back of the computer.
(3)	Kickstand	Provides stability and a variety of viewing angles.

Using the kickstand

To change the viewing angle, follow these steps:

1. Hold the computer with top edge up (the vents are on top).
2. Use one of the kickstand tabs to lift the kickstand away from the computer, and then position the kickstand at the desired angle.

To close the kickstand, push the kickstand against the bottom of the computer until it is flush with the bottom.

Keyboard (select products only)

Connecting the keyboard

1. To connect an optional keyboard, lower the computer onto the alignment post connectors **(1)** on the keyboard until the connectors click into place.
2. Position the kickstand **(2)** at the desired angle.

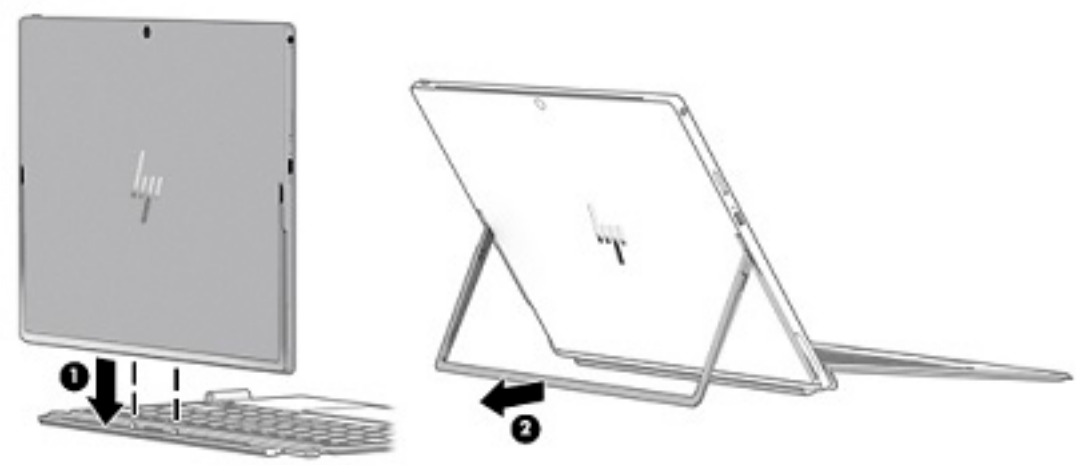

NOTE: If you close the kickstand, you can leave the keyboard attached and rotate the keyboard behind the computer so that the back of the keyboard is against the back of the computer. The keyboard keys and TouchPad are locked to prevent you from accidently typing while the keyboard is in this position.

Removing the keyboard

To remove the keyboard, pull the keyboard away from the computer.

TouchPad

updated

Component		Description
(1)	TouchPad zone	Reads your finger gestures to move the pointer or activate items on the screen. **NOTE:** For more information, see Using TouchPad and touch screen gestures on page 27.
(2)	Left TouchPad button	Functions like the left button on an external mouse.
(3)	Right TouchPad button	Functions like the right button on an external mouse.

Lights

updated

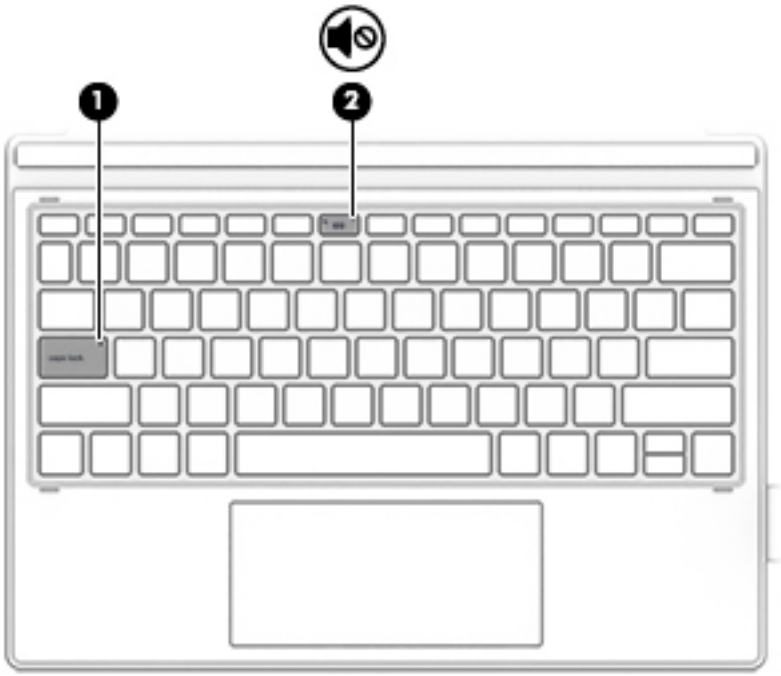

Component		Description
(1)	Caps lock light	On: Caps lock is on, which switches the key input to all capital letters.
(2)	Mute light	• On: Computer sound is off. • Off: Computer sound is on.

Special keys

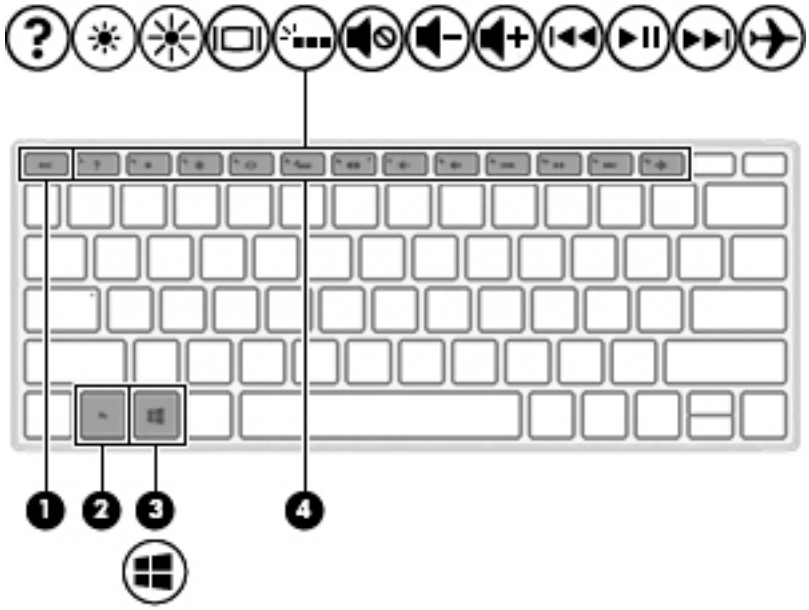

Component		Description
(1)	esc key	Displays system information when pressed in combination with the fn key.
(2)	fn key	Executes specific functions when pressed in combination with another key.
(3)	Windows key	Opens the **Start** menu. **NOTE:** Pressing the Windows key again will close the **Start** menu.
(4)	Action keys	Execute frequently used system functions. **NOTE:** On select products, the f5 action key turns the keyboard backlight feature off or on.

Action keys

- An action key performs an assigned function.
- The icon on each action key illustrates the function for that key.

Icon	Description
?	Opens the Get started app.
	Decreases the screen brightness incrementally as long as you hold down the key.
	Increases the screen brightness incrementally as long as you hold down the key.

Icon	Description
	Switches the screen image between display devices connected to the system. For example, if a monitor is connected to the computer, repeatedly pressing this key alternates the screen image from the computer display to the monitor display to a simultaneous display on both the computer and the monitor.
	Turns the keyboard backlight off or on. **NOTE:** To conserve battery power, turn off this feature.
	Mutes or restores speaker sound.
	Decreases speaker volume incrementally while you hold down the key.
	Increases speaker volume incrementally while you hold down the key.
	Plays the previous track of an audio CD or the previous section of a DVD or a Blu-ray Disc (BD).
	Starts, pauses, or resumes playback of an audio CD, a DVD, or a BD.
	Plays the next track of an audio CD or the next section of a DVD or a BD.
	Turns the airplane mode and wireless feature on or off. **NOTE:** The airplane mode key is also referred to as the wireless button. **NOTE:** A wireless network must be set up before a wireless connection is possible.

Labels

The labels affixed to the computer provide information you may need when you troubleshoot system problems or travel internationally with the computer.

IMPORTANT: Check the following locations for the labels described in this section: the kickstand, the bottom of the computer, inside the battery bay, under the service door, or on the back of the display.

- Service label—Provides important information to identify your computer. When contacting support, you will probably be asked for the serial number, and possibly for the product number or the model number. Locate these numbers before you contact support.

  Your service label will resemble one of the examples shown below. Refer to the illustration that most closely matches the service label on your computer.

Component	
(1)	Serial number
(2)	Product number
(3)	Warranty period
(4)	Model number (select products only)

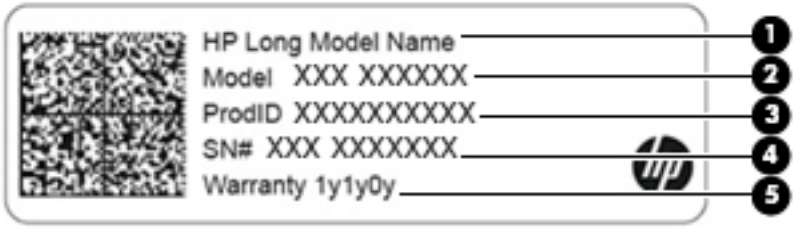

Component	
(1)	HP product name (select products only)
(2)	Model name (select products only)
(3)	Product number
(4)	Serial number
(5)	Warranty period

- Regulatory label(s)—Provide(s) regulatory information about the computer.
- Wireless certification label(s)—Provide(s) information about optional wireless devices and the approval markings for the countries or regions in which the devices have been approved for use.

Using the microSD memory card reader

Optional microSD memory cards provide secure data storage and convenient data sharing. These cards are often used with digital cameras and smartphones as well as with other computers.

Inserting a microSD memory card

⚠ **CAUTION:** To prevent damage to a microSD memory card or the computer, do not use force to remove or replace the tray.

updated text and graphic

1. Place the computer display side up on a flat surface.
2. Insert the tray removal tool **(1)** into the card tray access hole.

   NOTE: The tool is provided with your computer. You can also insert a small straightened paper clip to release the tray.

3. Press the tool in gently until the card tray is ejected.
4. Remove the tray **(2)** from the computer and insert the card **(3)**.
5. Replace the tray in the computer. Press in gently on the tray **(4)** until it is firmly seated.

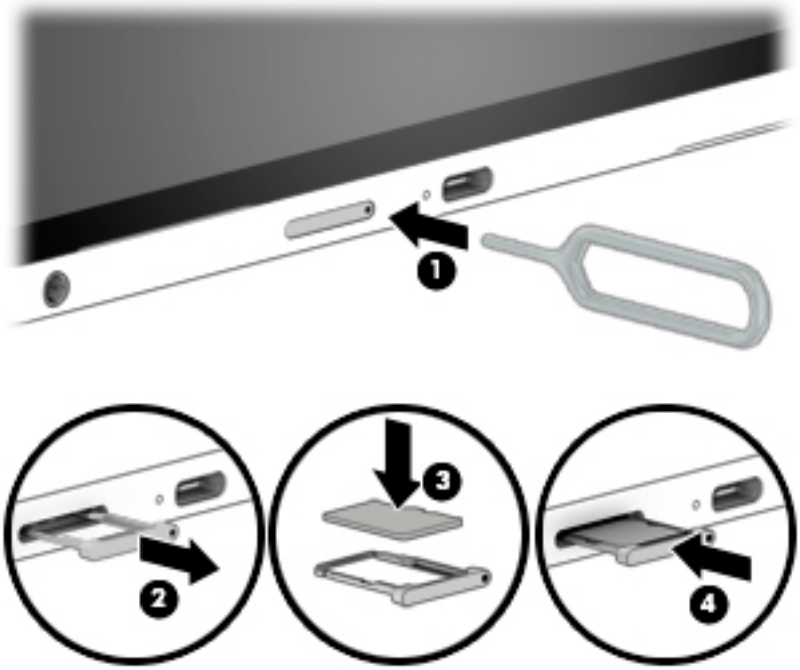

You will hear a sound when the device has been detected, and a menu of options may be displayed.

Removing a microSD memory card

CAUTION: To reduce the risk of loss of data or an unresponsive system, use the following procedure to safely remove the microSD memory card.

updated text

1. Save your information and close all programs associated with the microSD memory card.
2. Select the **Safely Remove Hardware and Eject Media** icon in the notification area, at the far right of the taskbar. Then follow the on-screen instructions.
3. Place the computer display side up on a flat surface.
4. Insert the tray removal tool **(1)** into the card tray access hole.

   NOTE: The tool is provided with your computer. You can also insert a small straightened paper clip to release the tray.

5. Press the tool in gently until the card tray is ejected.
6. Remove the tray **(2)** from the computer and remove the card **(3)**.

7. Replace the tray in the computer. Press in gently on the tray **(4)** until it is firmly seated.

updated graphic

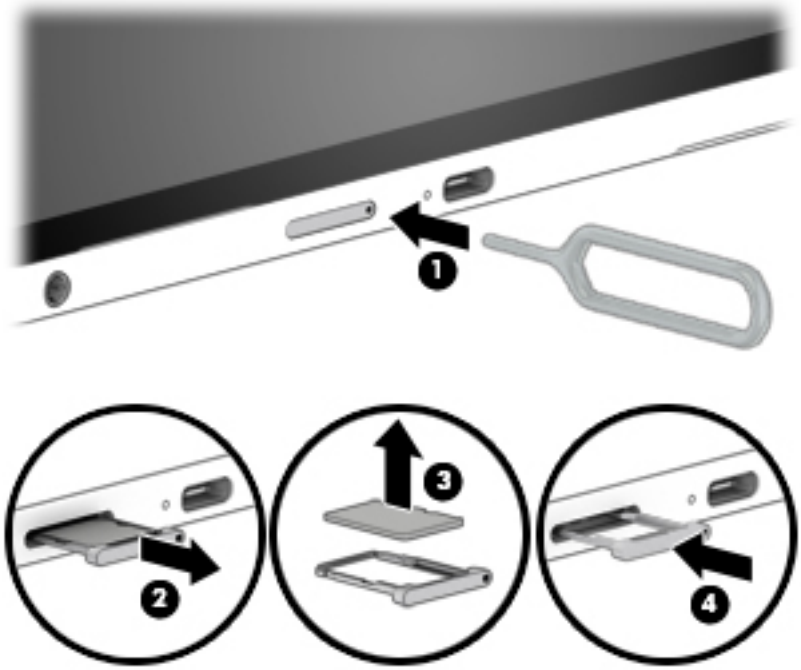

3 Connecting to a network

Your computer can travel with you wherever you go. But even at home, you can explore the globe and access information from millions of websites using your computer and a wired or wireless network connection. This chapter will help you get connected to that world.

Connecting to a wireless network

Your computer may be equipped with one or more of the following wireless devices:

- WLAN device—Connects the computer to wireless local area networks (commonly referred to as Wi-Fi networks, wireless LANs, or WLANs) in corporate offices, your home, and public places such as airports, restaurants, coffee shops, hotels, and universities. In a WLAN, the mobile wireless device in your computer communicates with a wireless router or a wireless access point.
- HP Mobile Broadband Module—Gives you wireless connectivity over a wireless wide area network (WWAN), a much larger area. Mobile network operators install base stations (similar to cell phone towers) throughout large geographic areas, effectively providing coverage across entire states, regions, or even countries.
- Bluetooth® device—Creates a personal area network (PAN) to connect to other Bluetooth-enabled devices such as computers, phones, printers, headsets, speakers, and cameras. In a PAN, each device communicates directly with other devices, and devices must be relatively close together—typically within 10 meters (approximately 33 feet) of each other.

Using the wireless controls

You can control the wireless devices in your computer using one or more of these features:

- Airplane mode key (also called wireless button or wireless key) (referred to in this chapter as airplane mode key)
- Operating system controls

Airplane mode key

The computer may have an airplane mode key, one or more wireless devices, and one or two wireless lights. All the wireless devices on your computer are enabled at the factory.

The wireless light indicates the overall power state of your wireless devices, not the status of individual devices.

Operating system controls

The Network and Sharing Center allows you to set up a connection or network, connect to a network, and diagnose and repair network problems.

To use operating system controls:

1. Type `control panel` in the taskbar search box, and then select **Control Panel**.
2. Select **Network and Internet**, and then select **Network and Sharing Center**.

Connecting to a WLAN

NOTE: When you are setting up Internet access in your home, you must establish an account with an Internet service provider (ISP). To purchase Internet service and a modem, contact a local ISP. The ISP will help set up the modem, install a network cable to connect your wireless router to the modem, and test the Internet service.

To connect to a WLAN, follow these steps:

1. Be sure that the WLAN device is on.
2. Select the network status icon in the taskbar, and then connect to one of the available networks.

   If the WLAN is a security-enabled WLAN, you are prompted to enter a security code. Enter the code, and then select **Next** to complete the connection.

   NOTE: If no WLANs are listed, you may be out of range of a wireless router or access point.

   NOTE: If you do not see the WLAN you want to connect to, right-click the network status icon in the taskbar, and then select **Open Network and Sharing Center**. Select **Set up a new connection or network**. A list of options is displayed, allowing you to manually search for and connect to a network or to create a new network connection.

3. Follow the on-screen instructions to complete the connection.

After the connection is made, select the network status icon at the far right of the taskbar, to verify the name and status of the connection.

NOTE: The functional range (how far your wireless signals travel) depends on WLAN implementation, router manufacturer, and interference from other electronic devices or structural barriers such as walls and floors.

Using HP Mobile Broadband (select products only)

Your HP Mobile Broadband computer has built-in support for mobile broadband service. Your new computer, when used with a mobile operator's network, gives you the freedom to connect to the Internet, send e-mail, or connect to your corporate network without the need for Wi-Fi hotspots.

You might need the HP Mobile Broadband Module IMEI and/or MEID number to activate mobile broadband service. The number may be printed on a label located on the bottom of your computer, inside the battery bay, under the service door, or on the back of the display.

– or –

You can find the number following these steps:

1. From the taskbar, select the network status icon.
2. Select **View Connection Settings**.
3. Under the **Mobile broadband** section, select the network status icon.

Some mobile network operators require the use of a subscriber identity module (SIM) card. A SIM card contains basic information about you, such as a personal identification number (PIN), as well as network information. Some computers include a SIM card that is preinstalled. If the SIM card is not preinstalled, it may be included with the HP Mobile Broadband documents provided with your computer, or the mobile network operator may provide it separately from the computer.

For information about HP Mobile Broadband and how to activate service with a preferred mobile network operator, see the HP Mobile Broadband information included with your computer.

Using GPS (select products only)

Your computer may be equipped with a Global Positioning System (GPS) device. GPS satellites deliver location, speed, and direction information to GPS-equipped systems.

To enable GPS, make sure location is enabled under the Location setting.

1. Type `location` in the taskbar search box, and then make the selection for location.
2. Follow the on-screen instructions for using location settings.

Using Bluetooth wireless devices (select products only)

A Bluetooth device provides short-range wireless communications that replace the physical cable connections that traditionally link electronic devices such as the following:

- Computers (desktop, notebook)
- Phones (cellular, cordless, smartphone)
- Imaging devices (printer, camera)
- Audio devices (headset, speakers)
- Mouse
- External keyboard

Connecting Bluetooth devices

Before you can use a Bluetooth device, you must establish a Bluetooth connection.

1. Type `bluetooth` in the taskbar search box, and then select **Bluetooth settings**.
2. Turn on Bluetooth, if it is not already turned on.
3. Select your device from the list, and then follow the on-screen instructions.

NOTE: If the device requires verification, a pairing code is displayed. On the device you are adding, follow the on-screen instructions to verify that the code on your device matches the pairing code. For more information, refer to the documentation provided with the device.

NOTE: If your device does not appear in the list, be sure that Bluetooth on that device is turned on. Some devices may have additional requirements; refer to the documentation provided with the device.

Connecting to a wired network—LAN (select products only)

Use a LAN connection if you want to connect the computer directly to a router in your home (instead of working wirelessly), or if you want to connect to an existing network at your office.

Connecting to a LAN requires an RJ-45 (network) cable and a network jack or an optional docking device or expansion port, if there is no RJ-45 jack on the computer.

To connect the network cable, follow these steps:

1. Plug the network cable into the network jack **(1)** on the computer.

2. Plug the other end of the network cable into a network wall jack **(2)** or router.

NOTE: If the network cable contains noise suppression circuitry **(3)**, which prevents interference from TV and radio reception, orient the circuitry end of the cable toward the computer.

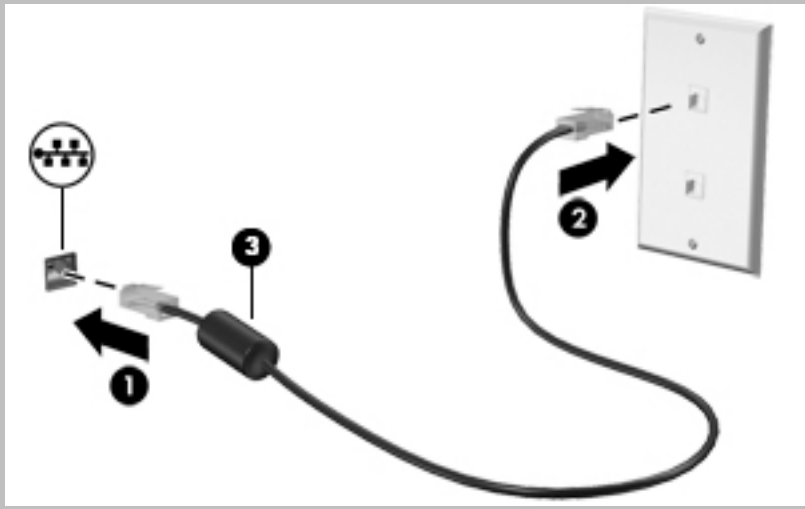

Connecting to your mobile device (select products only)

HP Orbit provides a way to easily move files, pictures, videos, and other information between your mobile device and computer.

NOTE: Before setting up and using HP Orbit, make sure your computer and mobile device are connected to the same Wi-Fi network.

To set up HP Orbit:

1. Download and install the HP Orbit app from the app store for your mobile device.
2. Open the **HP Orbit** app on your mobile device.
3. On your computer, select the **Start** button, and then select **HP Orbit**.

   – or –

   Open **HP Orbit** from the taskbar icon.
4. Follow the on-screen instructions to enter a pairing code and continue the installation.

After the devices have been paired, HP Orbit will remember the connection and allow you to send files between the devices whenever they are both connected to the same Wi-Fi network.

To transfer files from your mobile device to your computer:

1. Open the **HP Orbit** app on your mobile device.
2. Select the type of file.
3. Select the file, and then select **Send**.

When the transfer is complete, the file appears on HP Orbit Canvas on your computer.

To transfer files from your computer to your mobile device:

1. Open the **HP Orbit** app on your computer.
2. Drag and drop the file onto HP Orbit Canvas on your computer, and then follow the on-screen instructions.

When the transfer is complete, the file appears on HP Orbit Canvas on your mobile device.

For more information about using HP Orbit, refer to the HP Orbit software Help.

NOTE: Help is not available in all languages.

1. Open the **HP Orbit** app.
2. Select the **Settings** icon , and then select **Help**.

For more information about supported platforms and languages, go to http://www.hp.com/support.

4 Enjoying entertainment features

Use your HP computer as an entertainment hub to socialize via the camera, enjoy and manage your music, and download and watch movies. Or, to make your computer an even more powerful entertainment center, connect external devices like a monitor, projector, TV, speakers, or headphones.

Using the camera

Your computer has one or more cameras that enable you to connect with others for work or play. Cameras may be front facing, rear facing, or pop up. See Getting to know your computer on page 3 for camera details.

Most cameras allow you to video chat, record video, and record still images. Some also provide HD (high-definition) or 3D capability, apps for gaming, or facial recognition software like Windows Hello. See Securing your computer and information on page 41 for details about using Windows Hello.

To use your camera:

▲ Type `camera` in the taskbar search box, and then select **Camera** from the list of applications.

Using audio

You can download and listen to music, stream audio content (including radio) from the web, record audio, or mix audio and video to create multimedia. You can also play music CDs on the computer (on select models) or attach an external optical drive to play CDs. To enhance your listening enjoyment, attach external audio devices such as speakers or headphones.

Connecting speakers

You can attach wired speakers to your computer by connecting them to a USB port or to the audio-out (headphone)/audio-in (microphone) combo jack on your computer or on a docking station.

To connect wireless speakers to your computer, follow the device manufacturer's instructions. Before connecting speakers, lower the volume setting.

Connecting headphones

⚠ **WARNING!** To reduce the risk of personal injury, lower the volume setting before putting on headphones, earbuds, or a headset. For additional safety information, see the *Regulatory, Safety and Environmental Notices*.

To access this document:

▲ Select the **Start** button, select **HP Help and Support**, and then select **HP Documentation**.

You can connect wired headphones to the audio-out (headphone)/audio-in (microphone) combo jack on your computer.

To connect wireless headphones to your computer, follow the device manufacturer's instructions.

Connecting headsets

WARNING! To reduce the risk of personal injury, lower the volume setting before putting on headphones, earbuds, or a headset. For additional safety information, see the *Regulatory, Safety and Environmental Notices*.

To access this document:

▲ Select the **Start** button, select **HP Help and Support**, and then select **HP Documentation**.

Headphones combined with a microphone are called headsets. You can connect wired headsets to the audio-out (headphone)/audio-in (microphone) combo jack on your computer.

To connect wireless headsets to your computer, follow the device manufacturer's instructions.

Using sound settings

Use sound settings to adjust system volume, change system sounds, or manage audio devices.

To view or change sound settings:

▲ Type `control panel` in the taskbar search box, select **Control Panel**, select **Hardware and Sound**, and then select **Sound**.

– or –

Right-click the **Start** button, select **Control Panel**, select **Hardware and Sound**, and then select **Sound**.

Your computer may include an enhanced sound system by Bang & Olufsen, B&O Play, or another provider. As a result, your computer may include advanced audio features that can be controlled through an audio control panel specific to your sound system.

Use the audio control panel to view and control audio settings.

▲ Type `control panel` in the taskbar search box, select **Control Panel**, select **Hardware and Sound**, and then select the audio control panel specific to your system.

– or –

Right-click the **Start** button, select **Control Panel**, select **Hardware and Sound**, and then select the audio control panel specific to your system.

Using video

Your computer is a powerful video device that enables you to watch streaming video from your favorite websites and download video and movies to watch on your computer when you are not connected to a network.

To enhance your viewing enjoyment, use one of the USB Type-C power connector and charging ports on the computer to connect an external monitor, projector, or TV.

updated text

IMPORTANT: Be sure that the external device is connected to the correct port on the computer, using the correct cable. Follow the device manufacturer's instructions.

NOTE: Cables and/or adapters (purchased separately) may be required.

For information on using your video features, refer to HP Support Assistant.

Discovering and connecting to Miracast-compatible wireless displays (select products only)

Added Miracast section. DCR to add to PDD.

To discover and connect to Miracast-compatible wireless displays without leaving your current apps, follow the steps below.

To open Miracast:

▲ Type `project` in the taskbar search box, and then click **Project to a second screen**. Click **Connect to a wireless display**, and then follow the on-screen instructions.

5 Navigating the screen

You can navigate the computer screen in the following ways:

- Use touch gestures directly on the computer screen
- Use touch gestures on the TouchPad
- Use a keyboard and optional mouse (mouse purchased separately)
- Use an on-screen keyboard
- Use the active pen provided with the computer. For more information, refer to the documentation provided with the pen.

Using TouchPad and touch screen gestures

The TouchPad helps you navigate the computer screen and control the pointer using simple touch gestures. You can also use the left and right TouchPad buttons as you would use the corresponding buttons on an external mouse. To navigate a touch screen (select products only), touch the screen directly using gestures described in this chapter.

You can also customize gestures and view demonstrations of how they work. Type `control panel` in the taskbar search box, select **Control Panel**, and then select **Hardware and Sound**. Under **Devices and Printers**, select **Mouse**.

NOTE: Unless noted, gestures can be used on the TouchPad or a touch screen.

Tap

Use the tap/double-tap gesture to select or open an item on the screen.

- Point to an item on the screen, and then tap one finger on the TouchPad zone or touch screen to select the item. Double-tap an item to open it.

Two-finger pinch zoom

Use the two-finger pinch zoom to zoom out or in on images or text.

- Zoom out by placing two fingers apart on the TouchPad zone or touch screen and then moving your fingers together.
- Zoom in by placing two fingers together on the TouchPad zone or touch screen and then moving your fingers apart.

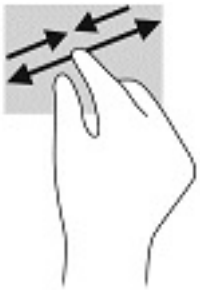

Two-finger slide (TouchPad only)

Use the two-finger slide to move up, down, or sideways on a page or image.

- Place two fingers slightly apart on the TouchPad zone and then drag them up, down, left, or right.

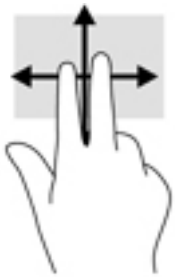

Two-finger tap (TouchPad only)

Use the two-finger tap to open the menu for an object on the screen.

NOTE: The two-finger tap performs the same function as right-clicking with the mouse.

- Tap two fingers on the TouchPad zone to open the options menu for the selected object.

Four-finger tap (TouchPad only)

Use the four-finger tap to open the action center.

- Tap four fingers on the Touchpad to open the action center and view current settings and notifications.

Three-finger swipe (TouchPad only)

Use the three-finger swipe to view open windows and to switch between open windows and the desktop.

- Swipe 3 fingers away from you to see all open windows.
- Swipe 3 fingers toward you to show the desktop.
- Swipe 3 fingers left or right to switch between open windows.

One-finger slide (touch screen only)

Use the one-finger slide to pan or scroll through lists and pages, or to move an object.

- To scroll across the screen, lightly slide one finger across the screen in the direction you want to move.
- To move an object, press and hold your finger on an object, and then drag your finger to move the object.

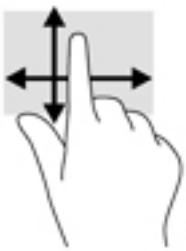

Using an optional keyboard and mouse

The optional keyboard and mouse allow you to type, select items, scroll, and perform the same functions as you do using touch gestures. The keyboard also allows you to use action keys and key combinations to perform specific functions.

NOTE: Depending on the country or region, your keyboard may have different keys and keyboard functions than those discussed in this section.

Using the on-screen keyboard

The computer has an on-screen keyboard that is displayed when you are in tablet mode.

1. To display the on-screen keyboard, tap the keyboard icon in the notification area, at the far right of the taskbar.
2. Begin typing.

   To access settings for the on-screen keyboard, type `control panel` in the taskbar search box, select **Control Panel**, select **Devices and Printers**, and then select **Typing**.

   NOTE: Action keys do not display or function on the on-screen keyboard.

   NOTE: Suggested words may be displayed above the on-screen keyboard. Tap a word to select it.

6 Managing power

Your computer can operate on either battery power or external power. When the computer is running on battery power and an external power source is not available to charge the battery, it is important to monitor and conserve the battery charge.

Some power management features described in this chapter may not be available on your computer.

Using Sleep and Hibernation

CAUTION: Several well-known vulnerabilities exist when a computer is in the Sleep state. To prevent an unauthorized user from accessing data on your computer, even encrypted data, HP recommends that you always initiate Hibernation instead of Sleep anytime the computer will be out of your physical possession. This practice is particularly important when you travel with your computer.

CAUTION: To reduce the risk of possible audio and video degradation, loss of audio or video playback functionality, or loss of information, do not initiate Sleep while reading from or writing to a disc or an external media card.

Windows has two power-saving states, Sleep and Hibernation.

- Sleep—The Sleep state is automatically initiated after a period of inactivity. Your work is saved to memory, allowing you to resume your work very quickly. You can also initiate Sleep manually. For more information, see Initiating and exiting Sleep on page 31.
- Hibernation—The Hibernation state is automatically initiated if the battery reaches a critical level. In the Hibernation state, your work is saved to a hibernation file and the computer powers down. You can also initiate Hibernation manually. For more information, see Initiating and exiting Hibernation (select products only) on page 32.

Initiating and exiting Sleep

You can initiate Sleep in any of the following ways:

- Close the display (select products only).
- Select the **Start** button, select the **Power** icon, and then select **Sleep**.
- Press the Sleep hot key; for example, fn+f3 (select products only)

You can exit Sleep in any of the following ways:

- Briefly press the power button.
- If the computer is closed, raise the display (select products only).
- Press a key on the keyboard (select products only).
- Tap the TouchPad (select products only).

When the computer exits Sleep, your work returns to the screen.

NOTE: If you have set a password to be required on exiting Sleep, you must enter your Windows password before your work returns to the screen.

Initiating and exiting Hibernation (select products only)

You can enable user-initiated Hibernation and change other power settings and timeouts using Power Options.

1. Type `power options` in the taskbar search box, and then select **Power Options**.

   – or –

   Right-click the **Power** icon , and then select **Power Options**.

2. In the left pane, select **Choose what the power buttons do** (wording may vary by product).
3. Depending on your product, you can enable Hibernation for battery power or external power in any of the following ways:
   - **Power button**—Under **Power and sleep buttons and lid settings** (wording may vary by product), select **When I press the power button**, and then select **Hibernate**.
   - **Sleep button** (select products only)—Under **Power and sleep buttons and lid settings** (wording may vary by product), select **When I press the sleep button**, and then select **Hibernate**.
   - **Lid** (select products only)—Under **Power and sleep buttons and lid settings** (wording may vary by product), select **When I close the lid**, and then select **Hibernate**.
   - **Power menu**—Select **Change Settings that are currently unavailable**, and then, under **Shutdown settings**, select the **Hibernate** check box.

     The Power menu can be accessed by selecting the **Start** button.
4. Select **Save changes**.

▲ To initiate Hibernation, use the method that you enabled in step 3.

▲ To exit Hibernation, briefly press the power button.

NOTE: If you have set a password to be required on exiting Hibernation, you must enter your Windows password before your work returns to the screen.

Shutting down (turning off) the computer

CAUTION: Unsaved information is lost when the computer shuts down. Be sure to save your work before shutting down the computer.

The Shut down command closes all open programs, including the operating system, and then turns off the display and the computer.

Shut down the computer under any of the following conditions:

- When you are connecting an external hardware device that does not connect to a USB or video port
- When the computer will be unused and disconnected from external power for an extended period

Although you can turn off the computer with the power button, the recommended procedure is to use the Windows Shut down command.

NOTE: If the computer is in the Sleep state or in Hibernation, first exit Sleep or Hibernation by briefly pressing the power button.

1. Save your work and close all open programs.
2. Select the **Start** button, select the **Power** icon, and then select **Shut down**.

If the computer is unresponsive and you are unable to use the preceding shutdown procedures, try the following emergency procedures in the sequence provided:

- Press ctrl+alt+delete, select the **Power** icon, and then select **Shut down**.
- Press and hold the power button for at least 10 seconds.
- Disconnect the computer from external power.

Using the Power icon and Power Options

The Power icon is located on the Windows taskbar. The Power icon allows you to quickly access power settings and view the remaining battery charge.

- To view the percentage of remaining battery charge and the current power plan, place the mouse pointer over the **Power** icon .
- To use Power Options, right–click the **Power** icon , and then select **Power Options**. You can also type `power options` in the taskbar search box, and then select **Power Options**.

Different Power icons indicate whether the computer is running on battery or external power. Placing the mouse pointer over the icon reveals a message if the battery has reached a low or critical battery level.

Running on battery power

WARNING! To reduce potential safety issues, use only the battery provided with the computer, a replacement battery provided by HP, or a compatible battery purchased from HP.

When a charged battery is in the computer and the computer is not plugged into external power, the computer runs on battery power. When the computer is off and unplugged from external power, the battery in the computer slowly discharges. The computer displays a message when the battery reaches a low or critical battery level.

Computer battery life varies, depending on power management settings, programs running on the computer, screen brightness, external devices connected to the computer, and other factors.

NOTE: When you disconnect external power, the display brightness is automatically decreased to conserve battery charge. Select computer products can switch between graphic modes to conserve battery charge.

Using HP Fast Charge (select products only)

The HP Fast Charge feature allows you to quickly charge your computer battery. Charging time may vary by +/- 10%. Depending on your computer model and the HP AC adapter provided with your computer, HP Fast Charge operates in one of the following ways:

- When the remaining battery charge is between zero and 50%, the battery will charge to 50% of full capacity in no more than 30 minutes.
- When the remaining battery charge is between zero and 90%, the battery will charge to 90% of full capacity in no more than 90 minutes.

To use HP Fast Charge, shut down your computer, and then connect the AC adapter to your computer and to external power.

Displaying battery charge

To view the percentage of remaining battery charge and the current power plan, place the mouse pointer over the **Power** icon .

Finding battery information in HP Support Assistant (select products only)

To access battery information:

1. Type `support` in the taskbar search box, and then select the **HP Support Assistant** app.

   – or –

   Select the question mark icon in the taskbar.

2. Select **My PC**, select the **Diagnostics and tools** tab, and then select **HP Battery Check**. If HP Battery Check indicates that your battery should be replaced, contact support.

HP Support Assistant provides the following tools and information about the battery:

- HP Battery Check
- Information about battery types, specifications, life cycles, and capacity

Conserving battery power

To conserve battery power and maximize battery life:

- Lower the brightness of the display.
- Select the **Power saver** setting in Power Options.
- Turn off wireless devices when you are not using them.
- Disconnect unused external devices that are not plugged into an external power source, such as an external hard drive connected to a USB port.
- Stop, disable, or remove any external media cards that you are not using.
- Before you leave your work, initiate Sleep or shut down the computer.

Identifying low battery levels

When a battery that is the sole power source for the computer reaches a low or critical battery level, the following behavior occurs:

- The battery light (select products only) indicates a low or critical battery level.

– or –

- The Power icon shows a low or critical battery notification.

NOTE: For additional information about the Power icon, see Using the Power icon and Power Options on page 33.

The computer takes the following actions for a critical battery level:

- If Hibernation is disabled and the computer is on or in the Sleep state, the computer remains briefly in the Sleep state and then shuts down and loses any unsaved information.
- If Hibernation is enabled and the computer is on or in the Sleep state, the computer initiates Hibernation.

Resolving a low battery level

Resolving a low battery level when external power is available

Connect one of the following to the computer and to external power:

- AC adapter
- Optional docking device or expansion product
- Optional power adapter purchased as an accessory from HP

Resolving a low battery level when no power source is available

Save your work and shut down the computer.

Resolving a low battery level when the computer cannot exit Hibernation

1. Connect the AC adapter to the computer and to external power.
2. If your computer has a user-replaceable battery (select products only), disconnect the computer from external power, and then remove the battery.

Factory-sealed battery

To monitor the status of the battery, or if the battery is no longer holding a charge, run HP Battery Check in the HP Support Assistant app (select products only).

1. Type `support` in the taskbar search box, and then select the **HP Support Assistant** app.

   – or –

   Select the question mark icon in the taskbar.
2. Select **My PC**, select the **Diagnostics and tools** tab, and then select **HP Battery Check**. If HP Battery Check indicates that your battery should be replaced, contact support.

The battery[ies] in this product cannot be easily replaced by users themselves. Removing or replacing the battery could affect your warranty coverage. If a battery is no longer holding a charge, contact support.

When a battery has reached the end of its useful life, do not dispose of the battery in general household waste. Follow the local laws and regulations in your area for battery disposal.

Running on external power

For information about connecting to external power, refer to the *Setup Instructions* poster provided in the computer box.

The computer does not use battery power when the computer is connected to external power with an approved AC adapter or an optional docking device or expansion product.

WARNING! To reduce potential safety issues, use only the AC adapter provided with the computer, a replacement AC adapter provided by HP, or a compatible AC adapter purchased from HP.

WARNING! Do not charge the computer battery while you are aboard aircraft.

Connect the computer to external power under any of the following conditions:

- When charging or calibrating a battery
- When installing or updating system software
- When updating the system BIOS
- When writing information to a disc (select products only)
- When running Disk Defragmenter on computers with internal hard drives
- When performing a backup or recovery

When you connect the computer to external power:

- The battery begins to charge.
- The screen brightness increases.
- The Power icon changes appearance.

When you disconnect external power:

- The computer switches to battery power.
- The screen brightness automatically decreases to conserve battery charge.
- The Power icon changes appearance.

7 Maintaining your computer

It is important to perform regular maintenance to keep your computer in optimal condition. This chapter explains how to use tools like Disk Defragmenter and Disk Cleanup. It also provides instructions for updating programs and drivers, steps to clean the computer, and tips for traveling with (or shipping) the computer.

Improving performance

You can improve the performance of your computer by performing regular maintenance tasks with tools such as Disk Defragmenter and Disk Cleanup.

Using Disk Defragmenter

HP recommends using Disk Defragmenter to defragment your hard drive at least once a month.

NOTE: It is not necessary to run Disk Defragmenter on solid-state drives.

To run Disk Defragmenter:

1. Connect the computer to AC power.
2. Type `defragment` in the taskbar search box, and then select **Defragment and Optimize Drives**.
3. Follow the on-screen instructions.

For additional information, access the Disk Defragmenter software Help.

Using Disk Cleanup

Use Disk Cleanup to search the hard drive for unnecessary files that you can safely delete to free up disk space and help the computer run more efficiently.

To run Disk Cleanup:

1. Type `disk` in the taskbar search box, and then select **Disk Cleanup**.
2. Follow the on-screen instructions.

Using HP 3D DriveGuard (select products only)

HP 3D DriveGuard protects a hard drive by parking the drive and halting data requests under either of the following conditions:

- You drop the computer.
- You move the computer with the display closed while the computer is running on battery power.

A short time after the end of one of these events, HP 3D DriveGuard returns the hard drive to normal operation.

NOTE: Only internal hard drives are protected by HP 3D DriveGuard. A hard drive installed in an optional docking device or connected to a USB port is not protected by HP 3D DriveGuard.

NOTE: Because solid-state drives (SSDs) lack moving parts, HP 3D DriveGuard is unnecessary for these drives.

For more information, see the HP 3D DriveGuard software Help.

Identifying HP 3D DriveGuard status

The hard drive light on the computer changes color to show that the drive in a primary hard drive bay and/or the drive in a secondary hard drive bay (select products only) is parked. To determine whether a drive is currently protected or whether it is parked, view the icon on the Windows desktop in the notification area, at the far right of the taskbar.

Updating programs and drivers

HP recommends that you update your programs and drivers on a regular basis. Updates can resolve issues and bring new features and options to your computer. For example, older graphics components might not work well with the most recent gaming software. Without the latest driver, you would not be getting the most out of your equipment.

Go to http://www.hp.com/support to download the latest versions of HP programs and drivers. In addition, register to receive automatic notifications when updates become available.

If you would like to update your programs and drivers, follow these instructions:

1. Type `support` in the taskbar search box, and then select the **HP Support Assistant** app.

   – or –

   Click the question mark icon in the taskbar.
2. Select **My PC**, select the **Updates** tab, and then select **Check for updates and messages**.
3. Follow the on-screen instructions.

Cleaning your computer

Use the following products to safely clean your computer:

- Dimethyl benzyl ammonium chloride 0.3 percent maximum concentration (for example, disposable wipes, which come in a variety of brands)
- Alcohol-free glass-cleaning fluid
- Solution of water and mild soap
- Dry microfiber cleaning cloth or a chamois (static-free cloth without oil)
- Static-free cloth wipes

⚠ **CAUTION:** Avoid strong cleaning solvents that can permanently damage your computer. If you are not sure that a cleaning product is safe for your computer, check the product contents to make sure that ingredients such as alcohol, acetone, ammonium chloride, methylene chloride, and hydrocarbons are not included in the product.

Fibrous materials, such as paper towels, can scratch the computer. Over time, dirt particles and cleaning agents can get trapped in the scratches.

Cleaning procedures

Follow the procedures in this section to safely clean your computer.

WARNING! To prevent electric shock or damage to components, do not attempt to clean your computer while it is on.

1. Turn off the computer.
2. Disconnect AC power.
3. Disconnect all powered external devices.

CAUTION: To prevent damage to internal components, do not spray cleaning agents or liquids directly on any computer surface. Liquids dripped on the surface can permanently damage internal components.

Cleaning the display

Gently wipe the display using a soft, lint-free cloth moistened with an alcohol-free glass cleaner. Be sure that a display is dry before you close the computer.

Cleaning the sides or cover

To clean the sides or cover, use a soft microfiber cloth or chamois moistened with one of the cleaning solutions listed previously, or use an acceptable disposable wipe.

NOTE: When cleaning the cover of the computer, use a circular motion to aid in removing dirt and debris.

Cleaning the TouchPad, keyboard, or mouse (select products only)

WARNING! To reduce the risk of electric shock or damage to internal components, do not use a vacuum cleaner attachment to clean the keyboard. A vacuum cleaner can deposit household debris on the keyboard surface.

CAUTION: To prevent damage to internal components, do not allow liquids to drip between the keys.

- To clean the TouchPad, keyboard, or mouse, use a soft microfiber cloth or a chamois moistened with one of the cleaning solutions listed previously or use an acceptable disposable wipe.
- To prevent keys from sticking and to remove dust, lint, and particles from the keyboard, use a can of compressed air with a straw extension.

Traveling with or shipping your computer

If you have to travel with or ship your computer, follow these tips to keep your equipment safe.

- Prepare the computer for traveling or shipping:
  - Back up your information to an external drive.
  - Remove all discs and all external media cards, such as memory cards.
  - Turn off and then disconnect all external devices.
  - Shut down the computer.
- Take along a backup of your information. Keep the backup separate from the computer.
- When traveling by air, carry the computer as hand luggage; do not check it in with the rest of your luggage.

CAUTION: Avoid exposing a drive to magnetic fields. Security devices with magnetic fields include airport walk-through devices and security wands. Airport conveyer belts and similar security devices that check carry-on baggage use X-rays instead of magnetism and do not damage drives.

- If you plan to use the computer during a flight, listen for the in-flight announcement that tells you when you are allowed to use your computer. In-flight computer use is at the discretion of the airline.
- If you are shipping the computer or a drive, use suitable protective packaging and label the package “FRAGILE.”
- The use of wireless devices may be restricted in some environments. Such restrictions may apply aboard aircraft, in hospitals, near explosives, and in hazardous locations. If you are uncertain of the policy that applies to the use of a wireless device in your computer, ask for authorization to use your computer before you turn it on.
- If you are traveling internationally, follow these suggestions:
  - Check the computer-related customs regulations for each country or region on your itinerary.
  - Check the power cord and adapter requirements for each location in which you plan to use the computer. Voltage, frequency, and plug configurations vary.

    ⚠ **WARNING!** To reduce the risk of electric shock, fire, or damage to the equipment, do not attempt to power the computer with a voltage converter kit sold for appliances.

8 Securing your computer and information

Computer security is essential for protecting the confidentiality, integrity, and availability of your information. Standard security solutions provided by the Windows operating system, HP applications, the Setup Utility (BIOS), and other third-party software can help protect your computer from a variety of risks, such as viruses, worms, and other types of malicious code.

IMPORTANT: Some security features listed in this chapter may not be available on your computer.

Using passwords

A password is a group of characters that you choose to secure your computer information and to protect online transactions. Several types of passwords can be set. For example, when you set up your computer for the first time, you were asked to create a user password to secure your computer. Additional passwords can be set in Windows or in HP Setup Utility (BIOS), which is preinstalled on your computer.

You may find it helpful to use the same password for a Setup Utility (BIOS) feature and for a Windows security feature.

To create and save passwords, use the following tips:

- To reduce the risk of being locked out of the computer, record each password and store it in a secure place away from the computer. Do not store passwords in a file on the computer.
- When creating passwords, follow requirements set by the program.
- Change your passwords at least every 3 months.
- An ideal password is long and has letters, punctuation, symbols, and numbers.
- Before you send your computer for service, back up your files, delete confidential files, and then remove all password settings.

For additional information about Windows passwords, such as screen-saver passwords:

▲ Type `support` in the taskbar search box, and then select the **HP Support Assistant** app.

– or –

Click the question mark icon in the taskbar.

Setting Windows passwords

Password	Function
User password	Protects access to a Windows user account.
Administrator password	Protects administrator-level access to computer contents. **NOTE:** This password cannot be used to access Setup Utility (BIOS) contents.

Setting Setup Utility (BIOS) passwords

Password	Function
Administrator password	• Must be entered each time you access Setup Utility (BIOS). • If you forget your administrator password, you cannot access Setup Utility (BIOS).
Power-on password	• Must be entered each time you turn on or restart the computer. • If you forget your power-on password, you cannot turn on or restart the computer.

To set, change, or delete an administrator or power-on password in Setup Utility (BIOS):

CAUTION: Use extreme care when making changes in Setup Utility (BIOS). Errors can prevent the computer from operating properly.

NOTE: To start Setup Utility, your computer must be in notebook mode and you must use the keyboard attached to your notebook. The on-screen keyboard, which displays in tablet mode, cannot access Setup Utility.

1. Start Setup Utility (BIOS):
   - Computers or tablets with keyboards:
     ▲ Turn on or restart the computer, quickly press esc, and then press f10.
   - Tablets without keyboards:
     1. Turn on or restart the tablet, and then quickly hold down the volume up button.

        - or -

        Turn on or restart the tablet, and then quickly hold down the volume down button.

        - or -

        Turn on or restart the tablet, and then quickly hold down the Windows button.
     2. Tap **f10**.
2. Select **Security**, and then follow the on-screen instructions.

Your changes take effect when the computer restarts.

Using Windows Hello (select products only)

On products equipped with a fingerprint reader or an infrared camera, you can use Windows Hello to sign in by swiping your finger or looking at the camera.

To set up Windows Hello, follow these steps:

1. Select the **Start** button, select **Settings**, select **Accounts**, and then select **Sign-in options**.
2. Under **Windows Hello**, follow the on-screen instructions to add both a password and a numeric PIN, and then enroll your fingerprint or facial ID.

   NOTE: The PIN is not limited in length, but it must consist of numbers only. No alphabetic or special characters are allowed.

Using Internet security software

When you use your computer to access email, a network, or the Internet, you potentially expose your computer to computer viruses, spyware, and other online threats. To help protect your computer, Internet security software that includes antivirus and firewall features may be preinstalled on your computer as a trial offer. To provide ongoing protection against newly discovered viruses and other security risks, security software must be kept up to date. It is strongly recommended that you upgrade the security software trial offer or purchase the software of your choice in order to fully protect your computer.

Using antivirus software

Computer viruses can disable programs, utilities, or the operating system, or cause them to function abnormally. Antivirus software can detect most viruses, destroy them, and in most cases, repair any damage they have caused.

To provide ongoing protection against newly discovered viruses, antivirus software must be kept up to date.

An antivirus program may be preinstalled on your computer. It is strongly recommended that you use the antivirus program of your choice in order to fully protect your computer.

For more information about computer viruses, type `support` in the taskbar search box, and then select the **HP Support Assistant** app.

– or –

Click the question mark icon in the taskbar.

Using firewall software

Firewalls are designed to prevent unauthorized access to a system or network. A firewall can be software you install on your computer and/or network, or it can be a combination of both hardware and software.

There are two types of firewalls to consider:

- Host-based firewalls—Software that protects only the computer it is installed on.
- Network-based firewalls—Installed between your DSL or cable modem and your home network to protect all the computers on the network.

When a firewall is installed on a system, all data sent to and from the system is monitored and compared with a set of user-defined security criteria. Any data that does not meet those criteria is blocked.

Installing software updates

HP, Windows, and third-party software installed on your computer should be regularly updated to correct security problems and improve software performance.

⚠ **CAUTION:** Microsoft sends out alerts regarding Windows updates, which may include security updates. To protect the computer from security breaches and computer viruses, install all updates from Microsoft as soon as you receive an alert.

You can install these updates automatically.

To view or change the settings:

1. Select the **Start** button, select **Settings**, and then select **Update & security**.
2. Select **Windows Update**, and then follow the on-screen instructions.
3. To schedule a time for installing updates, select **Advanced options**, and then follow the on-screen instructions.

Using HP Touchpoint Manager (select products only)

HP Touchpoint Manager is a cloud-based IT solution that enables businesses to effectively manage and secure their company assets. HP Touchpoint Manager helps protect devices against malware and other attacks, monitors device health, and enables you to reduce time spent solving end-user device and security issues. You can quickly download and install the software, which is highly cost effective relative to traditional in-house solutions.

Securing your wireless network

When you set up a WLAN or access an existing WLAN, always enable security features to protect your network from unauthorized access. WLANs in public areas (hotspots) like coffee shops and airports may not provide any security.

Backing up your software applications and information

Regularly back up your software applications and information to protect them from being permanently lost or damaged through a virus attack or a software or hardware failure.

Using an optional security cable (select products only)

A security cable (purchased separately) is designed to act as a deterrent, but it may not prevent the computer from being mishandled or stolen. To connect a security cable to your computer, follow the device manufacturer's instructions.

9 Using Setup Utility (BIOS)

Setup Utility, or Basic Input/Output System (BIOS), controls communication between all the input and output devices on the system (such as disk drives, display, keyboard, mouse, and printer). Setup Utility (BIOS) includes settings for the types of devices installed, the startup sequence of the computer, and the amount of system and extended memory.

NOTE: To start Setup Utility on convertible computers, your computer must be in notebook mode and you must use the keyboard attached to your notebook.

Starting Setup Utility (BIOS)

CAUTION: Use extreme care when making changes in Setup Utility (BIOS). Errors can prevent the computer from operating properly.

- Computers or tablets with keyboards:

  ▲ Turn on or restart the computer, quickly press esc, and then press f10.

- Tablets without keyboards:

  1. Turn on or restart the tablet, and then quickly hold down the volume up button.
  2. Tap **f10**.

Updating Setup Utility (BIOS)

Updated versions of Setup Utility (BIOS) may be available on the HP website.

Most BIOS updates on the HP website are packaged in compressed files called *SoftPaqs*.

Some download packages contain a file named Readme.txt, which contains information regarding installing and troubleshooting the file.

Determining the BIOS version

To decide whether you need to update Setup Utility (BIOS), first determine the BIOS version on your computer.

To reveal the BIOS version information (also known as *ROM date* and *System BIOS*), use one of these options.

- HP Support Assistant

  1. Type `support` in the taskbar search box, and then select the **HP Support Assistant** app.

     – or –

     Select the question mark icon in the taskbar.

  2. Select **My PC**, and then select **Specifications**.

- Setup Utility (BIOS)

1. Start Setup Utility (BIOS) (see Starting Setup Utility (BIOS) on page 45).
2. Select **Main**, select **System Information**, and then make note of the BIOS version.
3. Select **Exit**, select **No**, and then follow the on-screen instructions.

To check for later BIOS versions, see Downloading a BIOS update on page 46.

Downloading a BIOS update

CAUTION: To reduce the risk of damage to the computer or an unsuccessful installation, download and install a BIOS update only when the computer is connected to reliable external power using the AC adapter. Do not download or install a BIOS update while the computer is running on battery power, docked in an optional docking device, or connected to an optional power source. During the download and installation, follow these instructions:

- Do not disconnect power from the computer by unplugging the power cord from the AC outlet.
- Do not shut down the computer or initiate Sleep.
- Do not insert, remove, connect, or disconnect any device, cable, or cord.

NOTE: If your computer is connected to a network, consult the network administrator before installing any software updates, especially system BIOS updates.

1. Type `support` in the taskbar search box, and then select the **HP Support Assistant** app.

   – or –

   Select the question mark icon in the taskbar.
2. Select **Updates**, and then select **Check for updates and messages**.
3. Follow the on-screen instructions.
4. At the download area, follow these steps:
   a. Identify the most recent BIOS update and compare it to the BIOS version currently installed on your computer. If the update is more recent than your BIOS version, make a note of the date, name, or other identifier. You may need this information to locate the update later, after it has been downloaded to your hard drive.
   b. Follow the on-screen instructions to download your selection to the hard drive.

      Make a note of the path to the location on your hard drive where the BIOS update is downloaded. You will need to access this path when you are ready to install the update.

BIOS installation procedures vary. Follow any instructions that appear on the screen after the download is complete. If no instructions appear, follow these steps:

1. Type `file` in the taskbar search box, and then select **File Explorer**.
2. Select your hard drive designation. The hard drive designation is typically Local Disk (C:).
3. Using the hard drive path you recorded earlier, open the folder that contains the update.
4. Double-click or double-tap the file that has an .exe extension (for example, *filename*.exe).

   The BIOS installation begins.
5. Complete the installation by following the on-screen instructions.

NOTE: After a message on the screen reports a successful installation, you can delete the downloaded file from your hard drive.

10 Using HP PC Hardware Diagnostics (UEFI)

HP PC Hardware Diagnostics is a Unified Extensible Firmware Interface (UEFI) that allows you to run diagnostic tests to determine whether the computer hardware is functioning properly. The tool runs outside the operating system so that it can isolate hardware failures from issues that are caused by the operating system or other software components.

When HP PC Hardware Diagnostics UEFI detects a failure that requires hardware replacement, a 24-digit Failure ID code is generated. This ID code can then be provided to support to help determine how to correct the problem.

To start HP PC Hardware Diagnostics (UEFI), follow these steps:

1. Start BIOS.
   - Tablets with keyboards
     - ▲ Turn on or restart the computer, quickly press esc.
   - Tablets without keyboards
     - ▲ Turn on or restart the tablet, and then quickly hold down the volume up button.
2. Press or tap f2.

   The BIOS searches three places for the diagnostic tools, in the following order:

   a. Connected USB drive

   NOTE: To download the HP PC Hardware Diagnostics (UEFI) tool to a USB drive, see Downloading HP PC Hardware Diagnostics (UEFI) to a USB device on page 47.

   b. Hard drive

   c. BIOS
3. When the diagnostic tool opens, select the type of diagnostic test you want to run, and then follow the on-screen instructions.

NOTE: To stop a test, press the button you used to access UEFI.

Downloading HP PC Hardware Diagnostics (UEFI) to a USB device

NOTE: The HP PC Hardware Diagnostics (UEFI) download instructions are provided in English only, and you must use a Windows computer to download and create the HP UEFI support environment because only .exe files are offered.

There are two options to download HP PC Hardware Diagnostics to a USB device.

Download the latest UEFI version

1. Go to http://www.hp.com/go/techcenter/pcdiags. The HP PC Diagnostics home page is displayed.
2. In the HP PC Hardware Diagnostics section, select the **Download** link, and then select **Run**.

Download any version of UEFI for a specific product

1. Go to http://www.hp.com/support.
2. Select **Get Software and drivers**.
3. Enter the product name or number.

   – or –

   Select **Identify now** to let HP automatically detect your product.
4. Select your computer, and then select your operating system.
5. In the **Diagnostic** section, follow the on-screen instructions to select and download the UEFI version you want.

11 Backing up, restoring, and recovering

This chapter provides information about the following processes. The information in the chapter is standard procedure for most products.

- Creating recovery media and backups
- Restoring and recovering your system

For additional information, refer to the HP Support Assistant app.

▲ Type `support` in the taskbar search box, and then select the **HP Support Assistant** app.

– or –

Select the question mark icon in the taskbar.

IMPORTANT: If you will be performing recovery procedures on a tablet, the tablet battery must be at least 70% charged before you start the recovery process.

IMPORTANT: For a tablet with a detachable keyboard, connect the tablet to the keyboard base before beginning any recovery process.

Creating recovery media and backups

The following methods of creating recovery media and backups are available on select products only. Choose the available method according to your computer model.

- Use HP Recovery Manager to create HP Recovery media after you successfully set up the computer. This step creates a backup of the HP Recovery partition on the computer. The backup can be used to reinstall the original operating system in cases where the hard drive is corrupted or has been replaced. For information on creating recovery media, see Creating HP Recovery media (select products only) on page 49. For information on the recovery options that are available using the recovery media, see Using Windows tools on page 50.
- Use Windows tools to create system restore points and create backups of personal information.

  For more information, see Recovering using HP Recovery Manager on page 51.

  NOTE: If storage is 32 GB or less, Microsoft System Restore is disabled by default.

Creating HP Recovery media (select products only)

If possible, check for the presence of the Recovery partition and the Windows partition. From the **Start** menu, select **File Explorer**, and then select **This PC**.

- If your computer does not list the Windows partition and the Recovery partition, you can obtain recovery media for your system from support. See the *Worldwide Telephone Numbers* booklet included with the computer. You can also find contact information on the HP website. Go to http://www.hp.com/support, select your country or region, and follow the on-screen instructions.

You can use Windows tools to create system restore points and create backups of personal information, see Using Windows tools on page 50.

- If your computer does list the Recovery partition and the Windows partition, you can use HP Recovery Manager to create recovery media after you successfully set up the computer. HP Recovery media can be used to perform system recovery if the hard drive becomes corrupted. System recovery reinstalls the original operating system and software programs that were installed at the factory and then configures the settings for the programs. HP Recovery media can also be used to customize the system or restore the factory image if you replace the hard drive.
  - Only one set of recovery media can be created. Handle these recovery tools carefully, and keep them in a safe place.
  - HP Recovery Manager examines the computer and determines the required storage capacity for the media that will be required.
  - To create recovery discs, your computer must have an optical drive with DVD writer capability, and you must use only high-quality blank DVD-R, DVD+R, DVD-R DL, or DVD+R DL discs. Do not use rewritable discs such as CD±RW, DVD±RW, double-layer DVD±RW, or BD-RE (rewritable Blu-ray) discs; they are not compatible with HP Recovery Manager software. Or, instead, you can use a high-quality blank USB flash drive.
  - If your computer does not include an integrated optical drive with DVD writer capability, but you would like to create DVD recovery media, you can use an external optical drive (purchased separately) to create recovery discs. If you use an external optical drive, it must be connected directly to a USB port on the computer; the drive cannot be connected to a USB port on an external device, such as a USB hub. If you cannot create DVD media yourself, you can obtain recovery discs for your computer from HP. See the *Worldwide Telephone Numbers* booklet included with the computer. You can also find contact information on the HP website. Go to http://www.hp.com/support, select your country or region, and follow the on-screen instructions.
  - Be sure that the computer is connected to AC power before you begin creating the recovery media.
  - The creation process can take an hour or more. Do not interrupt the creation process.
  - If necessary, you can exit the program before you have finished creating all of the recovery DVDs. HP Recovery Manager will finish burning the current DVD. The next time you start HP Recovery Manager, you will be prompted to continue.

To create HP Recovery media:

IMPORTANT: For a tablet with a detachable keyboard, connect the tablet to the keyboard base before beginning these steps.

1. Type `recovery` in the taskbar search box, and then select **HP Recovery Manager**.
2. Select **Create recovery media**, and then follow the on-screen instructions.

If you ever need to recover the system, see Recovering using HP Recovery Manager on page 51.

Using Windows tools

You can create recovery media, system restore points, and backups of personal information using Windows tools.

NOTE: If storage is 32 GB or less, Microsoft System Restore is disabled by default.

For more information and steps, see the Get started app.

▲ Select the **Start** button, and then select the **Get started** app.

Restore and recovery

There are several options for recovering your system. Choose the method that best matches your situation and level of expertise:

IMPORTANT: Not all methods are available on all products.

- Windows offers several options for restoring from backup, refreshing the computer, and resetting the computer to its original state. For more information see the Get started app.

  ▲ Select the **Start** button, and then select the **Get started** app.

- If you need to correct a problem with a preinstalled application or driver, use the Reinstall drivers and/or applications option (select products only) of HP Recovery Manager to reinstall the individual application or driver.

  ▲ Type `recovery` in the taskbar search box, select **HP Recovery Manager**, select **Reinstall drivers and/or applications**, and then follow the on-screen instructions.

- If you want to recover the Windows partition to original factory content, you can choose the System Recovery option from the HP Recovery partition (select products only) or use the HP Recovery media. For more information, see Recovering using HP Recovery Manager on page 51. If you have not already created recovery media, see Creating HP Recovery media (select products only) on page 49.

- On select products, if you want to recover the computer's original factory partition and content, or if you have replaced the hard drive, you can use the Factory Reset option of HP Recovery media. For more information, see Recovering using HP Recovery Manager on page 51.

- On select products, if you want to remove the Recovery partition to reclaim hard drive space, HP Recovery Manager offers the Remove Recovery Partition option.

  For more information, see Removing the HP Recovery partition (select products only) on page 54.

Recovering using HP Recovery Manager

HP Recovery Manager software allows you to recover the computer to its original factory state by using the HP Recovery media that you either created or that you obtained from HP, or by using the HP Recovery partition (select products only). If you have not already created recovery media, see Creating HP Recovery media (select products only) on page 49.

What you need to know before you get started

- HP Recovery Manager recovers only software that was installed at the factory. For software not provided with this computer, you must either download the software from the manufacturer's website or reinstall the software from the media provided by the manufacturer.

  IMPORTANT: Recovery through HP Recovery Manager should be used as a final attempt to correct computer issues.

- HP Recovery media must be used if the computer hard drive fails. If you have not already created recovery media, see Creating HP Recovery media (select products only) on page 49.

- To use the Factory Reset option (select products only), you must use HP Recovery media. If you have not already created recovery media, see Creating HP Recovery media (select products only) on page 49.

- If your computer does not allow the creation of HP Recovery media or if the HP Recovery media does not work, you can obtain recovery media for your system from support. See the *Worldwide Telephone Numbers* booklet included with the computer. You can also find contact information from the HP

website. Go to http://www.hp.com/support, select your country or region, and follow the on-screen instructions.

IMPORTANT: HP Recovery Manager does not automatically provide backups of your personal data. Before beginning recovery, back up any personal data you want to retain.

Using HP Recovery media, you can choose from one of the following recovery options:

NOTE: Only the options available for your computer display when you start the recovery process.

- System Recovery—Reinstalls the original operating system, and then configures the settings for the programs that were installed at the factory.
- Factory Reset—Restores the computer to its original factory state by deleting all information from the hard drive and re-creating the partitions. Then it reinstalls the operating system and the software that was installed at the factory.

The HP Recovery partition (select products only) allows System Recovery only.

Using the HP Recovery partition (select products only)

The HP Recovery partition allows you to perform a system recovery without the need for recovery discs or a recovery USB flash drive. This type of recovery can be used only if the hard drive is still working.

To start HP Recovery Manager from the HP Recovery partition:

IMPORTANT: For a tablet with a detachable keyboard, connect the tablet to the keyboard base before beginning these steps (select products only).

1. Type `recovery` in the taskbar search box, select **Recovery Manager**, and then select **HP Recovery Environment**.

   – or –

   For computers or tablets with keyboards attached, press f11 while the computer boots, or press and hold f11 as you press the power button.

   For tablets without keyboards:

   - Turn on or restart the tablet, and then quickly hold down the volume up button; then select **f11**.

   – or –

   - Turn on or restart the tablet, and then quickly hold down the volume down button; then select **f11**.
2. Select **Troubleshoot** from the boot options menu.
3. Select **Recovery Manager**, and then follow the on-screen instructions.

Using HP Recovery media to recover

You can use HP Recovery media to recover the original system. This method can be used if your system does not have an HP Recovery partition or if the hard drive is not working properly.

1. If possible, back up all personal files.
2. Insert the HP Recovery media, and then restart the computer.

   NOTE: If the computer does not automatically restart in HP Recovery Manager, change the computer boot order. See Changing the computer boot order on page 53.
3. Follow the on-screen instructions.

Changing the computer boot order

If your computer does not restart in HP Recovery Manager, you can change the computer boot order, which is the order of devices listed in BIOS where the computer looks for startup information. You can change the selection to an optical drive or a USB flash drive.

To change the boot order:

IMPORTANT: For a tablet with a detachable keyboard, connect the tablet to the keyboard base before beginning these steps.

1. Insert the HP Recovery media.
2. Access the system **Startup** menu.

   For computers or tablets with keyboards attached:

   ▲ Turn on or restart the computer or tablet, quickly press esc, and then press f9 for boot options.

   For tablets without keyboards:

   ▲ Turn on or restart the tablet, and then quickly hold down the volume up button; then select **f9**.

   – or –

   Turn on or restart the tablet, and then quickly hold down the volume down button; then select **f9**.
3. Select the optical drive or USB flash drive from which you want to boot.
4. Follow the on-screen instructions.

Removing the HP Recovery partition (select products only)

HP Recovery Manager software allows you to remove the HP Recovery partition to free up hard drive space.

IMPORTANT: After you remove the HP Recovery partition, you will not be able to perform System Recovery or create HP Recovery media from the HP Recovery partition. So before you remove the Recovery partition, create HP Recovery media; see Creating HP Recovery media (select products only) on page 49.

NOTE: The Remove Recovery Partition option is only available on products that support this function.

Follow these steps to remove the HP Recovery partition:

1. Type `recovery` in the taskbar search box, and then select **HP Recovery Manager**.
2. Select **Remove Recovery Partition**, and then follow the on-screen instructions.

12 Specifications

Input power

The power information in this section may be helpful if you plan to travel internationally with the computer.

The computer operates on DC power, which can be supplied by an AC or a DC power source. The AC power source must be rated at 100–240 V, 50–60 Hz. Although the computer can be powered from a standalone DC power source, it should be powered only with an AC adapter or a DC power source that is supplied and approved by HP for use with this computer.

The computer can operate on DC power within the following specifications. Operating voltage and current varies by platform. The voltage and current for your computer is located on the regulatory label.

Input power	Rating
Operating voltage and current	5 V dc @ 2 A / 12 V dc @ 3 A /15 V dc @ 3 A – 45 W USB-C 5 V dc @ 3 A / 9 V dc @ 3 A / 10 V dc @ 3.75 A / 12 V dc @ 3.75 A / 15 V dc @ 3 A / 20 V dc @ 2.25 A – 45 W USB-C 5 V dc @ 3 A / 9 V dc @ 3A / 10 V dc @ 5 A / 12 V dc @ 5 A / 15 V dc @ 4.33 A / 20 V dc @ 3.25 A – 65 W USB-C 5 V dc @ 3 A / 9 V dc @ 3 A / 10 V dc @ 5 A / 12 V dc @ 5 A / 15 V dc @ 5 A / 20 V dc @ 4.5 A – 90 W USB-C 19.5 V dc @ 2.31 A – 45 W 19.5 V dc @ 3.33 A – 65 W 19.5 V dc @ 4.62 A – 90 W 19.5 V dc @ 6.15 A – 120 W 19.5 V dc @ 7.70 A – 150 W 19.5 V dc @ 10.3 A – 200 W 19.5 V dc @ 11.8 A – 230 W 19.5 V dc @ 16.92 A – 330 W
DC plug of external HP power supply (select products only)	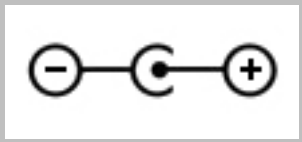

NOTE: This product is designed for IT power systems in Norway with phase-to-phase voltage not exceeding 240 V rms.

Operating environment

Factor	Metric	U.S.
Temperature		
Operating	**5°C to 35°C**	41°F to 95°F
Nonoperating	**-20°C to 60°C**	-4°F to 140°F
Relative humidity (noncondensing)		
Operating	**10% to 90%**	10% to 90%
Nonoperating	**5% to 95%**	5% to 95%
Maximum altitude (unpressurized)		
Operating	**-15 m to 3,048 m**	-50 ft to 10,000 ft
Nonoperating	**-15 m to 12,192 m**	-50 ft to 40,000 ft

13 Electrostatic Discharge

Electrostatic discharge is the release of static electricity when two objects come into contact—for example, the shock you receive when you walk across the carpet and touch a metal door knob.

A discharge of static electricity from fingers or other electrostatic conductors may damage electronic components.

To prevent damage to the computer, damage to a drive, or loss of information, observe these precautions:

- If removal or installation instructions direct you to unplug the computer, first be sure that it is properly grounded.
- Keep components in their electrostatic-safe containers until you are ready to install them.
- Avoid touching pins, leads, and circuitry. Handle electronic components as little as possible.
- Use nonmagnetic tools.
- Before handling components, discharge static electricity by touching an unpainted metal surface.
- If you remove a component, place it in an electrostatic-safe container.

14 Accessibility

HP designs, produces, and markets products and services that can be used by everyone, including people with disabilities, either on a stand-alone basis or with appropriate assistive devices. To access the latest information on HP accessibility, go to http://www.hp.com/accessibility.

Supported assistive technologies

HP products support a wide variety of operating system assistive technologies and can be configured to work with additional assistive technologies. Use the Search feature on your device to locate more information about assistive features.

NOTE: For additional information about a particular assistive technology product, contact customer support for that product.

Contacting support

We are constantly refining the accessibility of our products and services and welcome feedback from users. If you have an issue with a product or would like to tell us about accessibility features that have helped you, please contact us at +1 (888) 259-5707, Monday through Friday, 6 a.m. to 9 p.m. North American Mountain Time. If you are deaf or hard-of-hearing and use TRS/VRS/WebCapTel, contact us if you require technical support or have accessibility questions by calling +1 (877) 656-7058, Monday through Friday, 6 a.m. to 9 p.m. North American Mountain Time.

NOTE: Support is in English only.

Index

A

AC adapter and battery 4, 5
accessibility 58
action keys
  identifying 14
airplane mode 19
airplane mode key 15, 19
antivirus software, using 43
Audio 25
audio-out (headphone)/audio-in (microphone) jack, identifying 4

B

backing up software and information 44
backups 49
battery
  conserving power 34
  discharging 34
  factory-sealed 35
  finding information 34
  low battery levels 34
  resolving low battery level 35
battery charge 34
battery information, finding 34
battery power 33
best practices 1
BIOS
  determining version 45
  downloading an update 46
  starting the Setup Utility 45
  updating 45
Bluetooth device 19, 21
Bluetooth label 16
boot order
  changing 53
bottom 16
buttons
  left TouchPad 12
  power 7
  right TouchPad 12

C

camera
  identifying 6, 9
  using 24
camera light, identifying 6
caps lock light, identifying 13
caring for your computer 38
cleaning your computer 38
components
  bottom 8
  display 6
  kickstand 10
  left side 4
  rear 9
  right side 4
  top 7, 11
connecting to a mobile device 22
connecting to a network 19
connecting to a wireless network 19
connecting to a WLAN 20
connecting to LAN 21
corporate WLAN connection 20
critical battery level 35

D

Disk Cleanup software 37
Disk Defragmenter software 37
docking connector, identifying 8

E

electrostatic discharge 57
esc key, identifying 14
external power, using 35

F

factory-sealed battery 35
fingerprints, registering 42
firewall software 43
fn key, identifying 14
four-finger tap TouchPad gesture 28

G

GPS 21

H

headphones, connecting 24
headsets, connecting 25
Hibernation
  exiting 32
  initiated during critical battery level 35
  initiating 32
high-definition devices, connecting 26
HP 3D DriveGuard 37
HP Fast Charge 33
HP Mobile Broadband
  activating 20
  IMEI number 20
  MEID number 20
HP Orbit 22
HP PC Hardware Diagnostics (UEFI)
  Failure ID code 47
  using 47
HP Recovery Manager
  correcting boot problems 53
  starting 52
HP Recovery media
  creating 49
  recovery 52
HP Recovery partition
  recovery 52
  removing 54
HP resources 2
HP Touchpoint Manager 44

I

IMEI number 20
infrared camera
  identifying 6
infrared camera light, identifying 6
initiating Sleep and Hibernation 31
input power 55
installing
  optional security cable 44
internal microphones, identifying 6
Internet security software, using 43

J
jacks
audio-out (headphone)/audio-in (microphone) 4

K
keyboard
connecting 11
removing 12
keyboard and optional mouse
using 29
keys
action 14
airplane mode 15
esc 14
fn 14
Windows 14
kickstand tabs, identifying 9
kickstand, identifying 9

L
labels
Bluetooth 16
regulatory 16
serial number 15
service 15
wireless certification 16
WLAN 16
lights
AC adapter and battery light 4, 5
caps lock 13
mute 13
locating information
hardware 3
software 3
low battery level 34

M
maintenance
Disk Cleanup 37
Disk Defragmenter 37
HP 3D DriveGuard 37
updating programs and drivers 38
managing power 31
MEID number 20
memory card reader, identifying 5
microSD memory card
inserting 16
removing 17
minimized image recovery 52
minimized image, creating 51
Miracast 26
mobile broadband
activating 20
IMEI number 20
MEID number 20
mute light, identifying 13

O
one-finger slide touch screen gesture 29
operating environment 56
operating system controls 19
original system recovery 51

P
passwords
Setup Utility (BIOS) 42
Windows 41
POGO pin connector, identifying 8
ports
Miracast 26
USB Type-C power connector and charging 4, 5
power
battery 33
external 35
power button, identifying 7
Power icon, using 33
power settings, using 33
product name and number, computer 15
public WLAN connection 20

R
recover
options 51
recovery
discs 50, 52
HP Recovery Manager 51
media 52
starting 52
supported discs 50
system 51
USB flash drive 52
using HP Recovery media 50
recovery media
creating 49
creating using HP Recovery Manager 50
recovery partition
removing 54
regulatory information
regulatory label 16
wireless certification labels 16

S
security cable, installing 44
serial number 15
serial number, computer 15
service labels, locating 15
Setup Utility (BIOS) passwords 42
shipping the computer 39
shutdown 32
Sleep
exiting 31
initiating 31
Sleep and Hibernation
initiating 31
software
Disk Cleanup 37
Disk Defragmenter 37
HP 3D DriveGuard 37
software updates, installing 43
sound settings, using 25
speakers
connecting 24
identifying 6
supported discs, recovery 50
system recovery 51
system restore point
creating 50
system restore point, creating 49

T
tap TouchPad and touch screen gesture 27
three-finger swipe TouchPad gesture 29
touch screen gestures
one-finger slide 29
TouchPad
buttons 12
using 27
TouchPad and touch screen gestures
tap 27
two-finger pinch zoom 27
TouchPad gestures
four-finger tap 28
three-finger swipe 29

two-finger slide 28
two-finger tap 28
TouchPad zone, identifying 12
traveling with the computer 16, 39
turning off the computer 32
two-finger pinch zoom TouchPad and touch screen gesture 27
two-finger slide TouchPad gesture 28
two-finger tap TouchPad gesture 28

U

unresponsive system 32
updating programs and drivers 38
USB Type-C power connector and charging port, identifying 4, 5
using external power 35
using passwords 41
using Power icon 33
using power settings 33
using sound settings 25
using the keyboard and optional mouse 29
using the TouchPad 27

V

vents, identifying 7
video 25

W

Windows
system restore point 49, 50
Windows Hello
using 42
Windows key, identifying 14
Windows passwords 41
Windows tools
using 50
wired network (LAN) 21
wireless button 19
wireless certification label 16
wireless controls
button 19
operating system 19
wireless light 19
wireless network (WLAN)
connecting 20
corporate WLAN connection 20
functional range 20
public WLAN connection 20
wireless network, securing 44
WLAN antennas, identifying 6
WLAN device 16
WLAN label 16
WWAN device 20