Lenovo V330

V330-14ISK
V330-14IKB
V330-14IGM

User Guide

Read the safety notices and important tips in the included manuals before using your computer.

Notes

- Before using the product, be sure to read *Lenovo Safety and General Information Guide* first.
- The latest electronic compliance and environmental information are available from the Lenovo compliance information Web sites.
  - To view compliance information go to: http://www.lenovo.com/compliance.
  - To download environmental information go to: http://www.lenovo.com/ecodeclaration.
- Some instructions in this guide may assume that you are using Windows® 10. If you are using another Windows operating system, some operations may be slightly different. If you are using other operating systems, some operations may not apply to you.
- The features described in this guide are common to most models. Some features may not be available on your computer or your computer may include features that are not described in this user guide.
- The illustrations used in this manual are for Lenovo V330-14ISK/V330-14IKB unless otherwise stated.
- The illustrations in this manual may differ from the actual product. The screenshots of operating system are for reference only. Please refer to the actual product.
- When the computer is in battery mode, the Type-C and USB ports support only docking devices with power supply.

Regulatory Notice

- For details, refer to **Guides & Manuals** at http://support.lenovo.com.

First Edition (September 2017)
© Copyright Lenovo 2017.

LIMITED AND RESTRICTED RIGHTS NOTICE: If data or software is delivered pursuant to a General Services Administration "GSA" contract, use, reproduction, or disclosure is subject to restrictions set forth in Contract No. GS-35F-05925.

Contents

Chapter 1. Getting to know your computer 1
Top view 1
Left-side view 5
Right-side view 8
Bottom view 10
Chapter 2. Starting to use Windows 10 12
Configuring the operating system for the first time 12
Operating system interfaces 12
Putting the computer to sleep or shutting it down 16
Connecting to a wireless network 18
Get help from Windows 19
Chapter 3. Recovery system 20
Push-button reset 20
Lenovo OneKey Recovery system 22
Chapter 4. Troubleshooting 24
Frequently asked questions 24
Troubleshooting 26
Appendix A. CRU instructions 29
Replacing the battery pack (Optional) 30
Trademarks 32

Chapter 1. Getting to know your computer

Top view

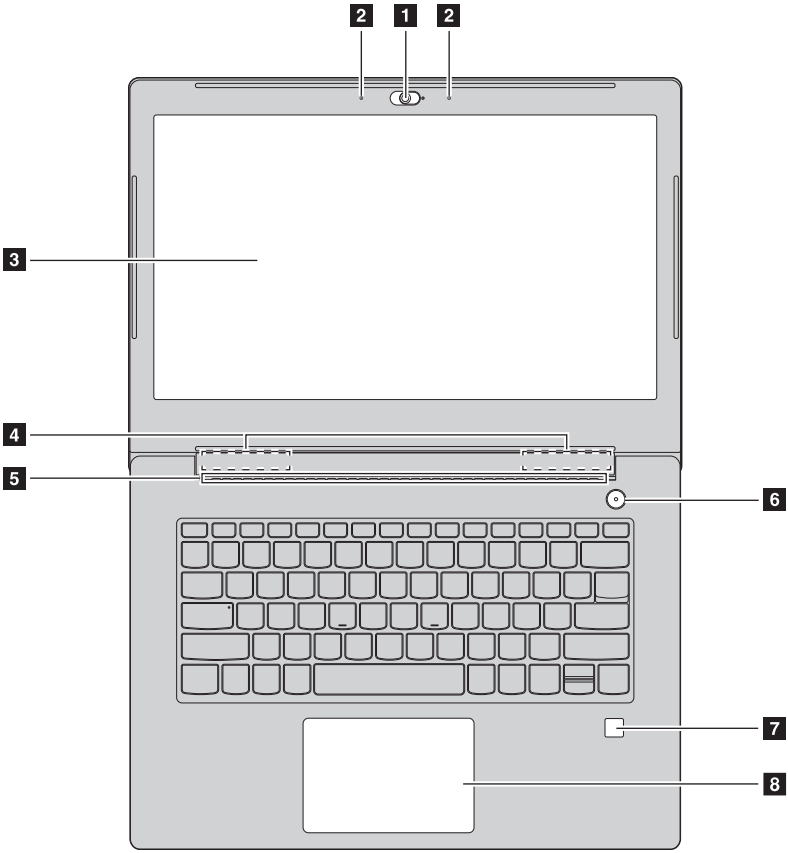

Note: The dashed areas indicate parts that are not visible externally.

Attention:

- Do *not* open the display panel beyond 170 degrees. When closing the display panel, be careful *not* to leave pens or any other objects in between the display panel and the keyboard. Otherwise, the display panel may be damaged.

1	**Integrated camera (on select models)**	Use the camera for video communication.
2	**Built-in microphone (on select models)**	Capture sound which can be used for video conferencing, voice narration, or audio recording.
3	**Computer display**	The LCD display with LED backlight provides brilliant visual output.
4	**Wireless LAN antennas**	Connect to a wireless LAN adapter to send and receive wireless radio signals.
5	**Ventilation slots**	Dissipate internal heat.
6	**Power button**	Press this button to turn on/off the computer.
7	**Fingerprint reader (on select models)**	Registers fingerprints that can be used as passwords to secure your computer.
8	**Touch pad**	The touch pad functions as a conventional mouse. **Touch pad:** To move the pointer on the screen, slide your fingertip over the pad in the direction in which you want the pointer to move. **Touch pad buttons:** The functions of the left/right side correspond to those of the left/right mouse button on a conventional mouse.

Note: You can enable/disable the touch pad by pressing **F6** ( ).

Using the keyboard

Hotkeys

You can access certain system settings quickly by pressing the appropriate hotkeys.

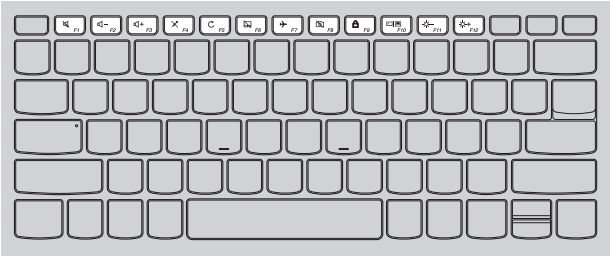

F1	Mutes/unmutes the sound.	F7	Enables/disables airplane mode.
F2	Decreases the volume level.	F8	Enables/disables camera. (on select models)
F3	Increases the volume level.	F9	Locks/unlocks the LCD screen.
F4	Enables/disables microphone. (on select models)	F10	Enables the external projector or dangles the external display.
F5	Refreshes page.	F11	Decreases display brightness.
F6	Enables/disables the touch pad.	F12	Increases display brightness.

Note: If you changed the **Hotkey Mode** from **Enabled** to **Disabled** in the BIOS setup utility, you will need to press the Fn key in combination with the appropriate hotkey.

Function key combinations

Through the use of the function keys, you can change operational features instantly. To use this function, press and hold **Fn** **1**; then press one of the function keys **2**.

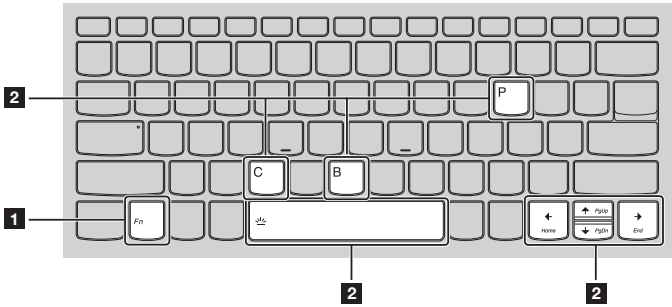

The following describes the features of each function key.

Fn + B:	Activates the break function.
Fn + P:	Activates the pause function.
Fn + C:	Enables/Disables the scroll lock.
Fn + Space (on select models):	Adjusts the keyboard backlight.

Left-side view

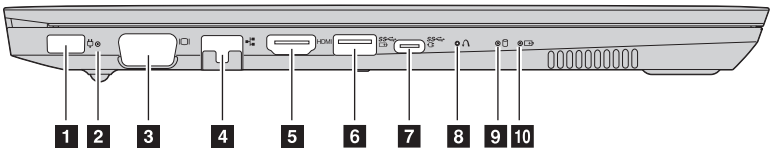

1 AC power adapter jack Connects to the AC power adapter.

2 DC-IN LED

Indicator	Indicator status	Meaning
Power status indicator	On (white)	The computer is powered on.
	Off	The computer is powered off.

3 VGA port (on select models) Connects to external display devices.

Note: If monitors are connected to the VGA and Type-C ports at the same time, the one connected to the Type-C port takes priority.

4 RJ-45 port Connects the computer to an Ethernet network.

5 HDMI port Connects to devices with HDMI input such as a TV or a display.

6 USB 3.0 port (on select models) Connects to USB devices.

Notes:

- If the battery charge is more than 20%, the USB port with a ( ) mark supports charging of an external USB device, even when the computer is turned off.
- For details, see “Connecting USB devices” on page 7.

7 Type-C port (on select models) Type-C port supports:

- USB 3.0
- PD
- DP
- Docking

Notes:
- You may need to install separate device drivers when connecting expansion docks or port replicators using this connector. Read the device's documentation before connecting it to the computer.
- When the computer is in DC mode, Type-C port supports USB 3.0 only.

8 Novo button

When the computer is off, press this button to start the System Recovery or the BIOS setup utility, or to enter the boot menu.

9 HDD LED

10 Battery charger status LED

AC power adapter status	Indicator status	Meaning
Disconnected	Off	The computer is in sleep mode or turned off; The battery has more than 20% charge.
	Solid amber	The battery has between 5% and 20% charge.
	Fast blinking amber	The battery has between 1% and 5% charge.
Connected	Slow blinking amber	The battery is being charged. When battery charge reaches 20%, the blinking color changes to white.
	Slow blinking white	The battery has between 20% and 80% charge and is still charging. When the battery reaches 80% charge the light will stop blinking.
	Solid white	The battery has more than 80% charge, charging will continue until the battery is fully charged.

Connecting USB devices

You can connect a USB device to your computer by inserting its USB plug (Type A) into the USB port on your computer.

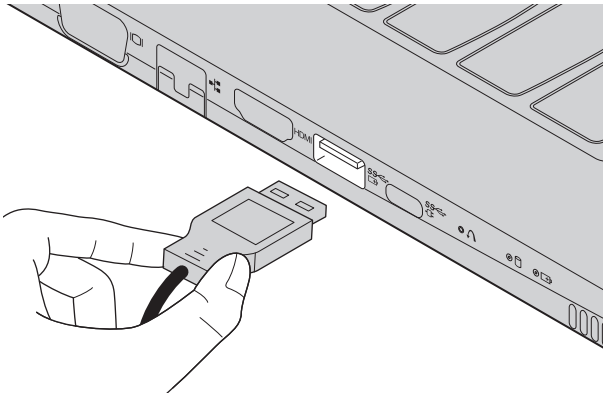

The first time you plug a USB device into a particular USB port on your computer, Windows automatically installs a driver for that device. After the driver has been installed, you can disconnect and reconnect the device without performing any additional steps.

Note: Typically, Windows detects a new device after it has been connected, and then installs the driver automatically. However, some devices may require you to install the driver before connecting. Check the documentation provided by the device's manufacturer before connecting the device.

Before disconnecting a USB storage device, make sure your computer has finished transferring data to that device. Click the **Safely Remove Hardware and Eject Media** icon in the Windows notification area to remove the device before disconnecting.

Note: If your USB device uses a power cord, connect the device to a power source before connecting it. Otherwise, the device may not be recognized.

Right-side view

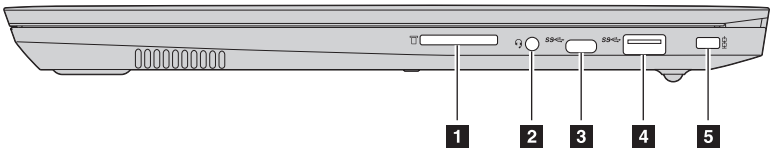

1 Memory card slot Insert memory cards (not supplied) here.

Note: For details, see “Using memory cards (not supplied)” on page 9.

2 Combo audio jack Connects to headsets.

Notes:
- The combo audio jack does not support conventional microphones.
- The recording function may not be supported if third-party headphones or headsets are connected, due to different industry standards.

3 Type-C port (on select models) This USB Type-C connector does not support connecting expansion docks or port replicators.
Type-C port supports:
- USB 3.0

4 USB 2.0/3.0 port (on select models) Connects to USB devices.

5 Kensington Mini Security slot For attaching a Kensington MiniSaver™ Mobile (or compatible) lock.
Attach a security lock (not supplied) here to help protect your computer from theft and unauthorized use. You can attach a security lock to your computer to help prevent it from being removed without your permission. For details on installing the security lock, please refer to the instructions shipped with the security lock that you have purchased.

Notes:
- Lock is not supplied. When purchasing a lock, choose one that utilizes the Cleat™ locking mechanism and verify its compatibility with the slot before purchase. A lock utilizing the T-Bar™ locking mechanism is not compatible with the Kensington Mini Security slot.
- Before purchasing any security product, verify that it is compatible with this type of security keyhole.
- You are responsible for evaluating, selecting, and implementing the locking devices and security features. Lenovo offers no comment, judgment, or warranty regarding the function, quality, or performance of locking devices and security features.

Using memory cards (not supplied)

Your computer supports the following types of memory cards:
- Secure Digital (SD) card
- Secure Digital High Capacity (SDHC) card
- SD eXtended Capacity (SDXC) card
- MultiMediaCard (MMC)

Notes:
- Insert *only* one card in the slot at a time.
- This card reader does not support SDIO devices (e.g., SDIO Bluetooth, etc.).

Inserting a memory card

Insert the memory card until it touches the bottom of the slot.

Removing a memory card

Gently pull the memory card out of the memory card slot.

Note: Before removing the memory card, disable it by using the Windows safely remove hardware and eject media utility to avoid data corruption.

Bottom view

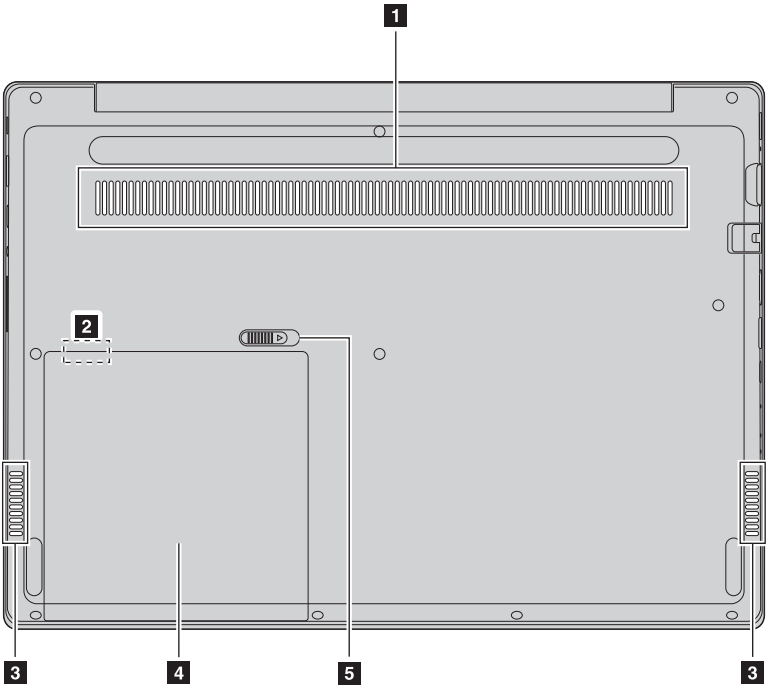

1	**Ventilation slots**	Dissipate internal heat.

Note: Make sure that none of the ventilation slots are blocked, or else overheating of the computer may occur.

2	**USB 2.0 port (on select models)**	Connects to USB devices.

Note: Check that the dimensions of the device to be used match this port prior to use.

3	**Speakers**	Provide audio output.
4	**Battery pack (Optional)/ Dummy case**	

5	**Battery latch-spring (on select models)**	Keeps the battery pack secured in place.

Chapter 2. Starting to use Windows 10

Configuring the operating system for the first time

You may need to configure the operating system when it is first used. The configuration process may include the procedures below:

- Accepting the end user license agreement
- Configuring the Internet connection
- Registering the operating system
- Creating a user account

Operating system interfaces

The return of the Start menu

Windows 10 comes with a powerful and useful start menu. To open the start menu, do one of the following:

- Select the Start button in the lower-left corner, the Start menu is displayed.
- Press the Windows key on the keyboard.

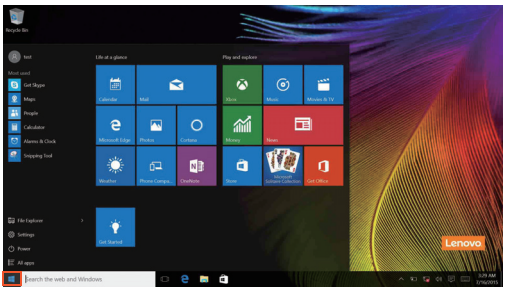

The power button is on the Start menu, click it you can choose to shut down or restart the computer, or put the computer into sleep mode.

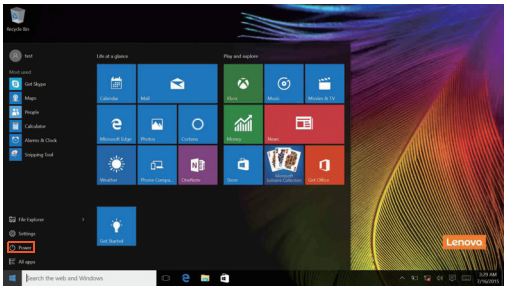

Through the Start menu, you can locate all the installed apps or view the frequently used apps.

The ACTION CENTER

Select the ACTION CENTER icon on the taskbar and the ACTION CENTER is displayed.

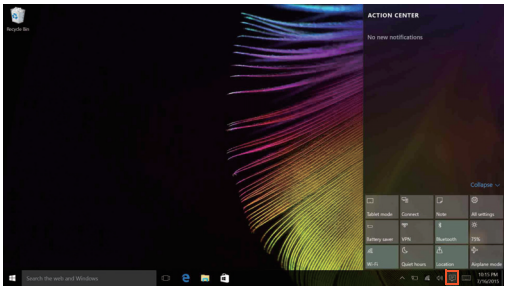

From the ACTION CENTER, you can examine important notifications from Windows and your apps. Moreover, you can change common settings quickly.

Task View in taskbar

In Windows 10, you can add a new desktop and switch between different desktops.
To add a new desktop, do the following:

- Click the Task View icon in the taskbar area.

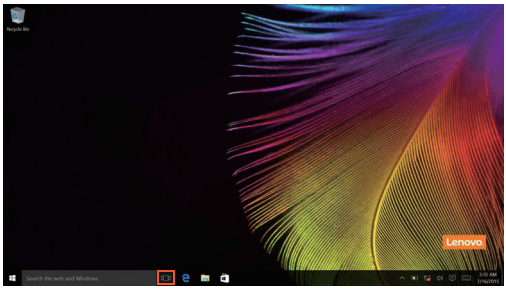

- Click **New desktop**.

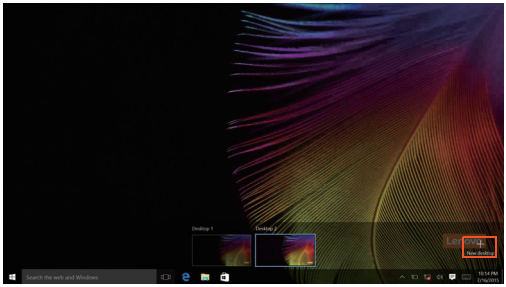

To switch between desktops, click the Task View icon , then select your desired desktop.

Putting the computer to sleep or shutting it down

When you have finished working with your computer, you can put it to sleep or shut it down.

Putting your computer to sleep

If you will be away from your computer for only a short time, put the computer to sleep.
When the computer is in sleep mode, you can quickly wake it to resume use, bypassing the startup process.
To put the computer to sleep, do one of the following:

- Close the display lid.
- Press the power button.
- Move the cursor to the lower-left corner, and then select the Start button.
  Select **Power** ⏻ → **Sleep**.

Note: Put your computer to sleep before you move it. Moving your computer while the hard disk drive is spinning can damage the hard disk, causing loss of data.

To wake up the computer, perform the following:

- Press any key on the keyboard.
- Press the power button.

Shutting down the computer

If you are not going to use your computer for a long time, shut it down.
To shut down your computer, do one of the following:

- Move the cursor to the lower-left corner, and then select the Start button. Select **Power** → **Shut down**.

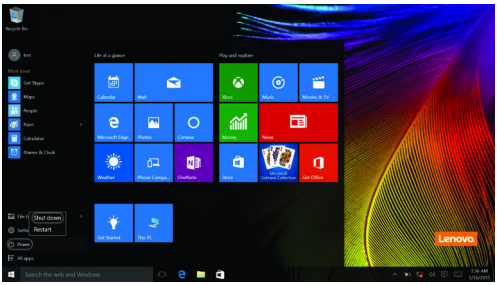

- Right-click the Start button in the lower-left corner and select **Shut down or sign out** → **Shut down**.

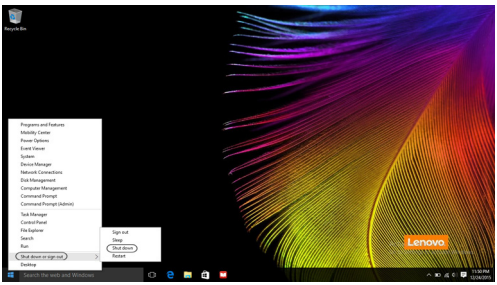

Connecting to a wireless network

Enabling wireless connection

To enable wireless functions, do one of the following:

- Click the ACTION CENTER icon in the notification area, and then deselect **Airplane mode**.
- Press to disable airplane mode.
- Click **Settings** → **Network & Internet** → **Airplane mode** to open the network configuration page. Then toggle the airplane mode switch to **Off**.

Connecting to a wireless network

After wireless has been enabled, the computer will automatically scan for available wireless networks and display them in the wireless network list. To connect to a wireless network, click the network name in the list, and then click **Connect**.

Note: Some networks require a network security key or passphrase for connection. To connect to one of those networks, ask the network administrator or the Internet service provider (ISP) for the security key or passphrase.

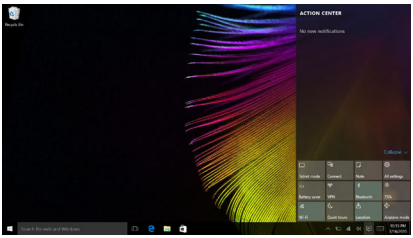

Get help from Windows

If you have a problem with the operating system, see the Windows Get Started app. To open it, do the following:

- Move the cursor to the lower-left corner, and then select the Start button. Select **Get Started** from **All apps**.

Chapter 3. Recovery system

Push-button reset

Push-button reset is a built-in recovery tool that enables users to restore their operating system to its original state. This preserves their data and important customizations, without the need to back up their data in advance.

The following **Push-button reset** features are available to users from multiple locations within Windows:

Refreshing the computer

Fixes software problems by reinstalling the factory default configuration. This preserves the user's data, important settings, and any Windows Store apps previously purchased from the Windows Store.

Resetting the computer

Prepares the computer for recycling or transfer of ownership. This reinstalls the factory default configuration and returns all user data and applications to the state of their original Out-of-Box Experience (OOBE).

Using Push-button reset

Push-button reset can be launched using one of the following methods:

- Novo button:
  - Shut down the computer and wait at least five seconds. Press the Novo button and then select **System Recovery**.
- Settings:
  - **Settings** → **Update & security** → **Recovery** → **Advanced startup** → select **Restart now**.

For more instructions, see the Windows Help and Support file on your computer.

When I purchased my computer, it included a copy of Windows. How can I determine whether the copy of Windows is preinstalled by Lenovo?

On the outside of the sales package of your computer, you should find a label containing configuration information for your computer. Check the printed string next to **OS**. If it contains **Windows** or **WIN**, the copy of Windows was preinstalled by Lenovo.

I uninstalled a preinstalled software, but there is no significant increase in the free drive space.

The copy of Windows running on your computer may be Compact technology enabled. For computers with Compact technology enabled Windows, the majority of files needed for preinstalled software are installed on the Recovery Partition and won't be deleted through normal uninstallation.

How can I determine whether the Windows running on my computer is Compact technology enabled?

Compact technology is normally enabled on copies of Windows 10 Update running on SSD (or eMMC) -only computer models. To check your computer,

1. Right-click the Start button in the lower-left corner and select **Disk Management**.
2. The Disk Management program starts.

If **Wim Boot** is labeled on the Windows partition (as illustrated), Compact technology is enabled on your copy of Windows.

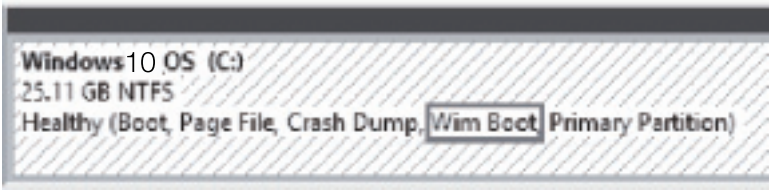

Where can I find drivers for the various hardware devices of my computer?

If your computer is preinstalled with a Windows operating system, first check the installation program on the D partition of your hard disk (for select models, on the C partition). If you cannot find the drivers for all the hardware devices that you need there, download the drivers from the Lenovo consumer support website.

Note: The Lenovo support Web site contains the latest drivers.

Lenovo OneKey Recovery system

You may need to recover or restore Windows if you encounter the following situations.
Your computer cannot start properly.
Your computer does not work well after installing apps, drivers, or updates.
Use the tools included with Windows to recover or restore Windows. If Lenovo OneKey Recovery system is preinstalled on your computer, you also can use it to recover or restore Windows.

Note: Lenovo OneKey Recovery system is only available on Windows 7 preinstalled models.

Lenovo OneKey Recovery system is backup and recovery software pre-installed on select models of Lenovo computers. It consists of two components: the backup application and the recovery environment.

Component	Function	How to start?
Backup application	backs up the system partition to an image file (user restore point).	Start the OneKey Recovery application in Windows.
Recovery environment	restores the system partition to the factory restore point or a user restore point.	Shut down the computer and press the Novo button to start the recovery environment.

Create a user restore point

Using the Lenovo OneKey Recovery system, you can create a restore point of the system partition.

Note: The system partition is a logical partition on which Windows is pre-installed. It is typically assigned the drive letter of C.

1. In Windows, start the OneKey Recovery system.

Note: If you cannot find the OneKey Recovery system, it may not be pre-installed on your computer. Use the restore and recovery options of Windows instead.

2. Select **System Backup**; choose a location to save the image file and select **Next**.

Note: When choosing where to save the image file, choose a location on an external storage drive or a partition other than the system partition.

Attention:

- Make sure the battery pack has enough power or keep your computer plugged in when creating a restore point.

Start the recovery environment

If Windows cannot start properly, you may start the recovery environment of Lenovo OneKey Recovery system and restore the system partition to the factory restore point or a user restore point.

1. Shut down the computer.
2. Press the Novo button and select **System Recovery** on the Novo button menu.

From the recovery environment, you can choose to restore the system partition to the factory restore point or a user restore point.

Attention:

- All personal data created after the restore point on the system partition will be deleted.

Chapter 4. Troubleshooting

Frequently asked questions

This section lists frequently asked questions by category.

Finding information

What safety precautions should I follow when using my computer?

The *Lenovo Safety and General Information Guide* which came with your computer contains safety precautions for using your computer. Read and follow all the precautions when using your computer.

Where can I find the hardware specifications for my computer?

You can find hardware specification for your computer on the printed flyers which came with your computer.

Where can I find warranty information?

For the warranty applicable to your computer, including the warranty period and type of warranty service, see the Lenovo limited warranty flyer that came with your computer.

Drivers and preinstalled software

Where can I find drivers for the various hardware devices of my computer?

If your computer is preinstalled with a Windows operating system, Lenovo provides drivers for all the hardware devices that you need on the D partition of your hard disk (for select models, on the C partition). You can also download the latest device drivers from the Lenovo consumer support website.

BIOS setup utility

What is the BIOS setup utility?

The BIOS setup utility is ROM-based software. It displays basic computer information and provides options for setting boot devices, security, hardware mode, and other preferences.

How can I start the BIOS setup utility?

To start the BIOS setup utility:

1. Shut down the computer.
2. Press the Novo button and then select **BIOS Setup**.

How can I change the boot mode?

There are two boot modes: **UEFI** and **Legacy Support**. To change the boot mode, start the BIOS setup utility and set boot mode to **UEFI** or **Legacy Support** on the boot menu.

When do I need to change the boot mode?

The default boot mode for your computer is **UEFI** mode. If you need to install a legacy operating system, such as Windows, Linux or Dos, etc (that is, any operating system before Windows 8) on your computer, you must change the boot mode to **Legacy Support**. The legacy operating system, such as Windows, Linux or Dos, etc cannot be installed if you don't change the boot mode.

Always-on power

What is the always-on power?

If a connector on your Lenovo computer is labeled with an “always-on” icon, the connector is able to provide power to connected devices when the computer is powered off, in sleep or hibernation mode. This feature can be enabled or disabled in the BIOS setup utility.

Note: If the computer is not connected to ac power and the remaining battery power is very low, the “always-on” connector stops providing power to connected external devices.

How to enable/disable always-on?

For some Lenovo computers with always-on connectors, the always-on function can be enabled/disabled in BIOS setup utility.

Start the BIOS setup utility.

In BIOS setup utility, select **Configuration** → **Always On USB** and press Enter; change the setting to **Disabled** or **Enabled**.

Select **Exit** → **Exit saving changes**.

Getting help

How can I contact the customer support center?

See “Chapter 3. Getting help and service” of *Lenovo Safety and General Information Guide*.

Troubleshooting

Display problems	
When I turn on the computer, nothing appears on the screen.	• If the screen is blank, make sure that: - The AC power adapter is connected to the computer, and the power cord is plugged into a working electrical outlet. - The computer power is on. Press the Power key again for confirmation. • If these items are set correctly, and the screen remains blank, have the computer serviced.
When I turn on the computer, only a white cursor appears on a blank screen.	• Restore backed-up files to your Windows environment or the entire contents of your hard disk to its original factory contents using Push-button reset. If you still see only the cursor on the screen, have the computer serviced.
The screen goes blank while the computer is on.	• Your power management is enabled. Perform the following to resume from sleep mode: - Press any key on the keyboard.
Sleep problems	
The critical low-battery error message appears, and the computer immediately turns off.	• The battery power is getting low. Connect the AC power adapter to the computer.
The computer enters sleep mode immediately after Power-on.	• Make sure that: - The battery is charged. - The operating temperature is within the acceptable range. See “Chapter 2. Use and care Information” in the *Lenovo Safety and General Information Guide*.

Note: If the battery is charged and the temperature is within range, have the computer serviced.

The computer does not return from sleep mode and the computer does not work.	• If your computer is in sleep mode, connect the AC power adapter to the computer, then press the Windows button or the Power key. • If the system still does not return from sleep mode, your system has stopped responding, and you cannot turn off the computer; reset the computer. Unsaved data may be lost. To reset the computer, press and hold the Power button for eight seconds or more. If the computer still does not reset, remove the AC power adapter.

Display panel problems

The screen is blank.	• Do the following: - If you are using the AC power adapter or the battery, and the battery status indicator is on, press **F12** (F12) to make the screen brighter. - If the power indicator is blinking, press the Power key to resume from sleep mode. - If the problem persists, follow the solution in the next problem "The screen is unreadable or distorted."
The screen is unreadable or distorted.	• Make sure that: - The screen resolution and color quality are correctly set. - The monitor type is correct.
Incorrect characters appear on the screen.	• Is the operating system or programs installed correctly? If they are installed and configured correctly, have the computer serviced.

Sound problems

No sound can be heard from the speakers even when the volume is turned up.	• Make sure that: - The Mute function is off. - The combo audio jack is not being used. - Speakers are selected as the playback device.

Battery problems	
Your computer shuts down before the battery status indicator shows empty. *-or-* Your computer operates after the battery status indicator shows empty.	• Recharge the battery.
Other problems	
Your computer does not respond.	• To turn off your computer, press and hold the Power key for eight seconds or more. If the computer still does not respond, remove the AC power adapter. • Your computer might lock when it enters sleep mode during a communication operation. Disable the sleep timer when you are working on the network.
The connected external device does not work.	• Do *not* connect or disconnect any external device cables other than USB while the computer power is on. Otherwise, you might damage your computer. • When using high power consumption external devices, such as an external USB optical drive, use an external device power adapter. Otherwise, the device may not be recognized, or the system may shut down as a result.

Appendix A. CRU instructions

Customer Replaceable Units (CRUs) are parts that can be upgraded or replaced by the customer. If a CRU is determined to be defective during the warranty period, a replacement CRU will be provided to the customer. Customers are responsible for installing the self-service CRUs for this product. Customers also can install optional-service CRUs, which might require some technical skills or tools, or request that a technician install the optional-service CRU under the terms of the applicable warranty service type for your country or region.

Notes:

- The illustrations in this manual might differ from the actual product. Please refer to the actual product.
- The CRU service is only applicable to certain countries.

Replacing the battery pack (Optional)

To replace the battery pack, perform the following:

1. Turn off the computer. Disconnect the AC power adapter and all cables from the computer.
2. Close the computer display and turn the computer over.
3. Holding the battery latch-spring in the unlocked position **1**, remove the battery pack in the direction shown by the arrow **2**.

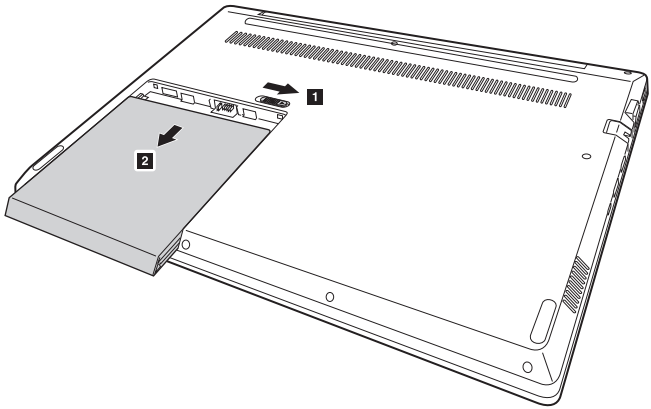

4. Gently pull the battery pack out from its cavity.
5. Insert a new battery pack.
6. Turn the computer over again.
7. Connect the AC power adapter and the cables to the computer.

The following table provides a list of CRUs for your computer, and informs you of where to find replacement instructions.

Self-service CRUs

	Safety, Warranty, and Setup Guide	User Guide
AC power adapter	×	
Power cord	×	
Battery pack		×

Trademarks

The following terms are trademarks or registered trademarks of Lenovo in the United States, other countries, or both.

Lenovo

Microsoft and Windows are trademarks of Microsoft Corporation in the United States, other countries, or both.

Other company, products, or service names may be trademarks or service marks of others.

©Lenovo China 2017

en-US
Rev. AA00