ThinkPad®

11e 5th Gen and Yoga 11e 5th Gen User Guide

Lenovo™

Note: Before using this information and the product it supports, ensure that you read and understand the following:

- *Safety and Warranty Guide*
- *Setup Guide*
- "Important safety information" on page v

The latest *Safety and Warranty Guide*, *Setup Guide*, and the *Regulatory Notice* are available on the Lenovo Support Web site at:

http://www.lenovo.com/support

First Edition (January 2018)

© Copyright Lenovo 2018.

LIMITED AND RESTRICTED RIGHTS NOTICE: If data or software is delivered pursuant to a General Services Administration "GSA" contract, use, reproduction, or disclosure is subject to restrictions set forth in Contract No. GS-35F-05925.

Contents

Important safety information v
Read this first. v
Important information about using your computer . . v
Conditions that require immediate action vii
Service and upgrades viii
Power cords and power adapters ix
Extension cords and related devices. ix
Plugs and outlets x
Power supply statement x
External devices xi
General battery notice xi
Notice for built-in rechargeable battery. xi
Notice for non-rechargeable coin-cell battery xii
Heat and product ventilation xiii
Electrical current safety information xiv
Liquid crystal display (LCD) notice xv
Using headphones or earphones xv
Choking hazard notice xv
Plastic bag notice xv
Glass parts notice xvi

Chapter 1. Product overview 1
Computer controls, connectors, and indicators . . . 1
Front view 1
Left-side view 3
Right-side view 4
Bottom view 6
Status indicators 6
Important product information 8
Machine type and model information. 8
FCC ID and IC Certification number 9
Labels for the Windows operating systems . . 10
Computer features. 11
Computer specifications 12
Operating environment 12
Lenovo programs 13
Accessing Lenovo programs 13
An introduction to Lenovo programs 13

Chapter 2. Using your computer . . . 15
Registering your computer 15
Frequently asked questions 15
Operating modes 16
Rotating the computer display 16
Notebook mode 17
Stand mode 18
Tablet mode 19
Tent mode 20
Using the multi-touch screen 21
Using the special buttons 24
Using the special keys 24
Using the touch pad 25
Power management 26
Using the ac power adapter 26
Using the battery 27
Managing the battery power 28
Power-saving modes 28
Cabled Ethernet connections 29
Wireless connections 29
Using the wireless-LAN connection 29
Using the Bluetooth connection. 30
Using the Airplane mode 30
Using audio features 30
Using the cameras. 31
Using a media card 31
Using an external display 32
Traveling with your computer 34

Chapter 3. Enhancing your computer. 35
Finding ThinkPad options 35
ThinkPad Pen Pro 35

Chapter 4. Accessibility, ergonomic, and maintenance information 39
Accessibility information 39
Ergonomic information 41
Cleaning and maintenance 42

Chapter 5. Security 45
Using passwords 45
Passwords introduction 45
Setting, changing, or removing a password . . 46
Hard disk security 47
Setting the security chip 47
Deleting data from your storage drive 48
Using firewalls 48
Protecting data against viruses 49

Chapter 6. Advanced configuration. 51
Installing the Windows 10 operating system 51
Installing device drivers. 52
Using the ThinkPad Setup program 52

© Copyright Lenovo 2018

Configuring ThinkPad Setup 53
Changing the startup sequence 53
Updating the UEFI BIOS. 54
BIOS menu 54
Using system management 62

Chapter 7. Troubleshooting computer problems 65
General tips for preventing problems 65
Diagnosing problems with Lenovo Companion. . . 65
Troubleshooting 66
Computer stops responding 66
Spills on the keyboard 66
Error messages 67
Beep errors. 68
Memory module problems 69
Ethernet problems 70
Wireless-LAN problem 71
Bluetooth problem 71
Keyboard problems 71
Computer screen problems 72
External monitor problems 74
Audio problems 75
Battery problems 76
ac power adapter problem 77
Power problems 77
Power button problem 77
Boot problems 78
Sleep and hibernation problems 78
Solid-state drive problem 79
ThinkPad Pen Pro problem 79
Software problem 79
USB problem 79

Chapter 8. Recovery information . . . 81
Resetting your computer 81
Using advanced startup options 81
Recovering your operating system if Windows 10 fails to start 81
Creating and using a recovery USB drive 82

Chapter 9. Replacing devices 83
Customer Replaceable Units. 83
Static electricity prevention 83
Disabling the built-in battery 84
Replacing the microSD card 84
Replacing the base cover assembly 85
Replacing the M.2 solid-state drive 86
Replacing the keyboard. 88
Replacing the power button card 92
Replacing the ThinkPad pen pro charger 93

Chapter 10. Getting support. 97
Before you contact Lenovo 97
Getting help and service 97
Lenovo Support Web site 98
Calling Lenovo 98
Purchasing additional services 99

Appendix A. Supplemental information about the Ubuntu operating system 101

Appendix B. Regulatory information 103
Certification-related information 103
Wireless-related information 103
Wireless interoperability 103
Usage environment and your health 103
Locating the UltraConnect wireless antennas. 104
Wireless-radio compliance information 104
Locating wireless regulatory notices 104
TCO certification 105
Export classification notice 105
Electronic emission notices 105
Federal Communications Commission Declaration of Conformity 105
Industry Canada Class B emission compliance statement 106
European Union conformity 106
German Class B compliance statement. . . . 106
Japan VCCI Class B compliance statement 107
Japan compliance statement for products which connect to the power mains with rated current less than or equal to 20 A per phase 107
Japan notice for ac power cord 107
Lenovo product service information for Taiwan 107
Eurasian compliance mark 107
Brazil audio notice 107

Appendix C. WEEE and recycling statements 109
General recycling information 109
Important WEEE information 109
Japan recycling statements 110
Recycling information for Brazil. 110
Battery recycling information for the European Union 111
Battery recycling information for Taiwan 112
Battery recycling information for the United States and Canada 112

Recycling information for China 112

Appendix D. Restriction of Hazardous Substances (RoHS) Directive 113

Appendix E. ENERGY STAR model information 117

Appendix F. Notices 119

Appendix G. Trademarks 121

© Copyright Lenovo 2018

Important safety information

Note: Read the important safety information first.

Read this first

This information can help you safely use your notebook computer. Follow and retain all information included with your computer. The information in this document does not alter the terms of your purchase agreement or the Limited Warranty. For more information, see "Warranty Information" in the *Safety and Warranty Guide* that comes with your computer.

Customer safety is important. Our products are developed to be safe and effective. However, personal computers are electronic devices. Power cords, power adapters, and other features can create potential safety risks that can result in physical injury or property damage, especially if misused. To reduce these risks, follow the instructions included with your product, observe all warnings on the product and in the operating instructions, and review the information included in this document carefully. By carefully following the information contained in this document and provided with your product, you can help protect yourself from hazards and create a safer computer work environment.

Note: This information includes references to power adapters and batteries. In addition to notebook computers, some products (such as speakers and monitors) ship with external power adapters. If you have such a product, this information applies to your product. In addition, computer products contain a coin-sized internal battery that provides power to the system clock even when the computer is unplugged, so the battery safety information applies to all computer products.

Important information about using your computer

Ensure that you follow the important tips given here to get the most use and enjoyment out of your computer. Failure to do so might lead to discomfort or injury, or cause the computer to fail.

Protect yourself from the heat that your computer generates.

When your computer is turned on or the battery is charging, the base, the palm rest, and some other parts may become hot. The temperature they reach depends on the amount of system activity and the level of charge in the battery.

Extended contact with your body, even through clothing, could cause discomfort or even a skin burn.

- Avoid keeping your hands, your lap, or any other part of your body in contact with a hot section of the computer for any extended time.
- Periodically take hands from using the keyboard by lifting your hands from the palm rest.

© Copyright Lenovo 2018

Protect yourself from the heat generated by the ac power adapter.

When the ac power adapter is connected to an electrical outlet and your computer, it generates heat.

Extended contact with your body, even through clothing, may cause a skin burn.

- Do not place the ac power adapter in contact with any part of your body while it is in use.
- Never use it to warm your body.

Prevent your computer from getting wet.

To avoid spills and the danger of electrical shock, keep liquids away from your computer.

Protect the cables from being damaged.

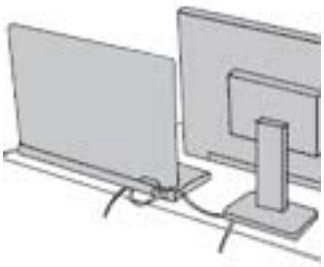

Applying strong force to cables may damage or break them.

Route communication lines, or the cables of an ac power adapter, a mouse, a keyboard, a printer, or any other electronic device, so that they cannot be walked on, tripped over, pinched by your computer or other objects, or in any way subject to treatment that could interfere with the operation of your computer.

Protect your computer and data when moving it.

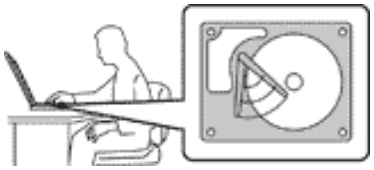

Before moving a computer equipped with a hard disk drive, do one of the following:

- Turn it off.
- Put it in sleep mode.
- Put it in hibernation mode.

This helps to prevent damage to the computer, and possible loss of data.

Handle your computer gently.

Do not drop, bump, scratch, twist, hit, vibrate, push, or place heavy objects on your computer, display, or external devices.

Carry your computer carefully.

- Use a quality carrying case that provides adequate cushioning and protection.
- Do not pack your computer in a tightly packed suitcase or bag.
- Before putting your computer in a carrying case, make sure that it is off, in sleep mode, or in hibernation mode. Do not put a computer in a carrying case while it is turned on.

Conditions that require immediate action

Products can become damaged due to misuse or neglect. Some product damage is serious enough that the product should not be used again until it has been inspected and, if necessary, repaired by an authorized servicer.

As with any electronic device, pay close attention to the product when it is turned on. On very rare occasions, you might notice an odor or see a puff of smoke or sparks vent from your product. Or you might hear sounds like popping, cracking, or hissing. These conditions might merely mean that an internal electronic component has failed in a safe and controlled manner. Or, they might indicate a potential safety issue. However, do not take risks or attempt to diagnose the situation yourself. Contact the Customer Support Center for further guidance. For a list of Service and Support phone numbers, see the following Web site:

http://www.lenovo.com/support/phone

Frequently inspect your computer and its components for damage or wear or signs of danger. If you have any question about the condition of a component, do not use the product. Contact the Customer Support Center or the product manufacturer for instructions on how to inspect the product and have it repaired, if necessary.

In the unlikely event that you notice any of the following conditions, or if you have any safety concerns with your product, stop using the product and unplug it from the power source and telecommunication lines until you can speak to the Customer Support Center for further guidance.

© Copyright Lenovo 2018

- Power cords, plugs, power adapters, extension cords, surge protectors, or power supplies that are cracked, broken, or damaged.
- Signs of overheating, smoke, sparks, or fire.
- Damage to a battery (such as cracks, dents, or creases), discharge from a battery, or a buildup of foreign substances on the battery.
- A cracking, hissing, or popping sound, or strong odor that comes from the product.
- Signs that liquid has been spilled or an object has fallen onto the computer product, the power cord, or power adapter.
- The computer product, power cord, or power adapter has been exposed to water.
- The product has been dropped or damaged in any way.
- The product does not operate normally when you follow the operating instructions.

Note: If you notice these conditions with a product (such as an extension cord) that is not manufactured for or by Lenovo®, stop using that product until you can contact the product manufacturer for further instructions, or until you get a suitable replacement.

Service and upgrades

Do not attempt to service a product yourself unless instructed to do so by the Customer Support Center or your documentation. Only use a Service Provider who is approved to repair your particular product.

Note: Some computer parts can be upgraded or replaced by the customer. Upgrades typically are referred to as options. Replacement parts approved for customer installation are referred to as Customer Replaceable Units, or CRUs. Lenovo provides documentation with instructions when it is appropriate for customers to install options or replace CRUs. You must closely follow all instructions when installing or replacing parts. The Off state of a power indicator does not necessarily mean that voltage levels inside a product are zero. Before you remove the covers from a product equipped with a power cord, always make sure that the power is turned off and that the product is unplugged from any power source. If you have any questions or concerns, contact the Customer Support Center.

Although there are no moving parts in your computer after the power cord has been disconnected, the following warnings are required for your safety.

CAUTION:
Hazardous moving parts. Keep fingers and other body parts away.

CAUTION:

Before you open the computer cover, turn off the computer and wait several minutes until the computer is cool.

Power cords and power adapters

DANGER

Use only the power cords and power adapters supplied by the product manufacturer.

The power cords shall be safety approved. For Germany, it shall be H03VV-F, 3G, 0.75 mm^2, or better. For other countries, the suitable types shall be used accordingly.

Never wrap a power cord around a power adapter or other object. Doing so can stress the cord in ways that can cause the cord to fray, crack, or crimp. This can present a safety hazard.

Always route power cords so that they will not be walked on, tripped over, or pinched by objects.

Protect power cords and power adapters from liquids. For instance, do not leave your power cord or power adapter near sinks, tubs, toilets, or on floors that are cleaned with liquid cleansers. Liquids can cause a short circuit, particularly if the power cord or power adapter has been stressed by misuse. Liquids also can cause gradual corrosion of power cord terminals and/or the connector terminals on a power adapter, which can eventually result in overheating.

Ensure that all power cord connectors are securely and completely plugged into receptacles.

Do not use any power adapter that shows corrosion at the ac input pins or shows signs of overheating (such as deformed plastic) at the ac input pins or anywhere on the power adapter.

Do not use any power cords where the electrical contacts on either end show signs of corrosion or overheating or where the power cord appears to have been damaged in any way.

To prevent possible overheating, do not cover the power adapter with clothing or other objects when the power adapter is plugged into an electrical outlet.

Extension cords and related devices

Ensure that extension cords, surge protectors, uninterruptible power supplies, and power strips that you use are rated to handle the electrical requirements of the product. Never overload these devices. If power strips are used, the load should not exceed the power strip input rating. Consult an electrician for more information if you have questions about power loads, power requirements, and input ratings.

© Copyright Lenovo 2018

Plugs and outlets

DANGER

If a receptacle (power outlet) that you intend to use with your computer equipment appears to be damaged or corroded, do not use the outlet until it is replaced by a qualified electrician.

Do not bend or modify the plug. If the plug is damaged, contact the manufacturer to obtain a replacement.

Do not share an electrical outlet with other home or commercial appliances that draw large amounts of electricity; otherwise, unstable voltage might damage your computer, data, or attached devices.

Some products are equipped with a three-pronged plug. This plug fits only into a grounded electrical outlet. This is a safety feature. Do not defeat this safety feature by trying to insert it into a non-grounded outlet. If you cannot insert the plug into the outlet, contact an electrician for an approved outlet adapter or to replace the outlet with one that enables this safety feature. Never overload an electrical outlet. The overall system load should not exceed 80 percent of the branch circuit rating. Consult an electrician for more information if you have questions about power loads and branch circuit ratings.

Be sure that the power outlet you are using is properly wired, easily accessible, and located close to the equipment. Do not fully extend power cords in a way that will stress the cords.

Be sure that the power outlet provides the correct voltage and current for the product you are installing.

Carefully connect and disconnect the equipment from the electrical outlet.

Power supply statement

DANGER

Never remove the cover on a power supply or any part that has the following label attached.

Hazardous voltage, current, and energy levels are present inside any component that has this label attached. There are no serviceable parts inside these components. If you suspect a problem with one of these parts, contact a service technician.

External devices

CAUTION:
Do not connect or disconnect any external device cables other than Universal Serial Bus (USB) and 1394 cables while the computer power is on; otherwise, you might damage your computer. To avoid possible damage to attached devices, wait at least five seconds after the computer is shut down to disconnect external devices.

General battery notice

DANGER

Batteries supplied by Lenovo for use with your product have been tested for compatibility and should only be replaced with approved parts. A battery other than the one specified by Lenovo, or a disassembled or modified battery is not covered by the warranty.

Battery abuse or mishandling can cause overheat, liquid leakage, or an explosion. To avoid possible injury, do the following:

- **Do not open, dissemble, or service any battery.**
- **Do not crush or puncture the battery.**
- **Do not short-circuit the battery, or expose it to water or other liquids.**
- **Keep the battery away from children.**
- **Keep the battery away from fire.**

Stop using the battery if it is damaged, or if you notice any discharge or the buildup of foreign materials on the battery leads.

Store the rechargeable batteries or products containing the rechargeable batteries at room temperature, charged to approximately 30 to 50% of capacity. We recommend that the batteries be charged about once per year to prevent overdischarge.

Do not put the battery in trash that is disposed of in landfills. When disposing of the battery, comply with local ordinances or regulations.

Notice for built-in rechargeable battery

DANGER

Do not attempt to remove or replace the built-in rechargeable battery. Replacement of the battery must be done by a Lenovo-authorized repair facility or technician.

Only recharge the battery strictly according to instructions included in the product documentation.

The Lenovo-authorized repair facilities or technicians recycle Lenovo batteries according to local laws and regulations.

© Copyright Lenovo 2018

Notice for non-rechargeable coin-cell battery

DANGER

Do not attempt to replace the non-rechargeable coin-cell battery. Replacement of the battery must be done by a Lenovo-authorized repair facility or technician.

The Lenovo-authorized repair facilities or technicians recycle Lenovo batteries according to local laws and regulations.

The following statement applies to users in the state of California, U.S.A.

California Perchlorate Information:

Products containing manganese dioxide lithium coin-cell batteries may contain perchlorate.

Perchlorate Material - special handling may apply, See http://www.dtsc.ca.gov/hazardouswaste/perchlorate

Heat and product ventilation

DANGER

Computers, ac power adapters, and many accessories can generate heat when turned on and when batteries are charging. Notebook computers can generate a significant amount of heat due to their compact size. Always follow these basic precautions:

- **When your computer is turned on or the battery is charging, the base, the palm rest, and some other parts may become hot. Avoid keeping your hands, your lap, or any other part of your body in contact with a hot section of the computer for any extended length of time. When you use the keyboard, avoid keeping your palms on the palm rest for a prolonged period of time. Your computer generates some heat during normal operation. The amount of heat depends on the amount of system activity and the battery charge level. Extended contact with your body, even through clothing, could cause discomfort or even a skin burn. Periodically take breaks from using the keyboard by lifting your hands from the palm rest; and be careful not to use the keyboard for any extended length of time.**
- **Do not operate your computer or charge the battery near flammable materials or in explosive environments.**
- **Ventilation slots, fans and/or heat sinks are provided with the product for safety, comfort, and reliable operation. These features might inadvertently become blocked by placing the product on a bed, sofa, carpet, or other flexible surface. Never block, cover, or disable these features.**
- **When the ac power adapter is connected to an electrical outlet and your computer, it generates heat. Do not place the adapter in contact with any part of your body while using it. Never use the ac power adapter to warm your body. Extended contact with your body, even through clothing, may cause a skin burn.**

For your safety, always follow these basic precautions with your computer:

- **Keep the cover closed whenever the computer is plugged in.**
- **Regularly inspect the outside of the computer for dust accumulation.**
- **Remove dust from vents and any perforations in the bezel. More frequent cleanings might be required for computers in dusty or high-traffic areas.**
- **Do not restrict or block any ventilation openings.**
- **Do not operate your computer inside furniture, as this might increase the risk of overheating.**
- **Airflow temperatures into the computer should not exceed 35°C (95°F).**

© Copyright Lenovo 2018

Electrical current safety information

DANGER

Electric current from power, telephone, and communication cables is hazardous.

To avoid a shock hazard:

- **Do not use your computer during a lightning storm.**
- **Do not connect or disconnect any cables or perform installation, maintenance, or reconfiguration of this product during an electrical storm.**
- **Connect all power cords to a properly wired and grounded electrical outlet.**
- **Connect to properly wired outlets any equipment that will be attached to this product.**
- **Whenever possible, use one hand only to connect or disconnect signal cables.**
- **Never turn on any equipment when there is evidence of fire, water, or structural damage.**
- **Disconnect the attached power cords, battery, and all the cables before you open the device covers, unless instructed otherwise in the installation and configuration procedures.**
- **Do not use your computer until all internal parts enclosures are fastened into place. Never use the computer when internal parts and circuits are exposed.**

DANGER

Connect and disconnect cables as described in the following procedures when installing, moving, or opening covers on this product or attached devices.

To connect:

1. **Turn everything OFF.**
2. **First, attach all cables to devices.**
3. **Attach signal cables to connectors.**
4. **Attach power cords to outlets.**
5. **Turn devices ON.**

To disconnect:

1. **Turn everything OFF.**
2. **First, remove power cords from outlets.**
3. **Remove signal cables from connectors.**
4. **Remove all cables from devices.**

The power cord must be disconnected from the wall outlet or receptacle before installing all other electrical cables connected to the computer.

The power cord may be reconnected to the wall outlet or receptacle only after all other electrical cables have been connected to the computer.

DANGER

During electrical storms, do not perform any replacement and do not connect the telephone cable to or disconnect it from the telephone outlet on the wall.

Liquid crystal display (LCD) notice

CAUTION:
The liquid crystal display (LCD) is made of glass, and rough handling or dropping the computer can cause the LCD to break. If the LCD breaks and the internal fluid gets into your eyes or on your hands, immediately wash the affected areas with water for at least 15 minutes; if any symptoms are present after washing, get medical care.

Note: For products with mercury-containing fluorescent lamps (for example, non-LED), the fluorescent lamp in the liquid crystal display (LCD) contains mercury; dispose of according to local, state, or federal laws.

Using headphones or earphones

CAUTION:
Excessive sound pressure from earphones and headphones can cause hearing loss. Adjustment of the equalizer to maximum increases the earphone and headphone output voltage and the sound pressure level. Therefore, to protect your hearing, adjust the equalizer to an appropriate level.

Excessive use of headphones or earphones for a long period of time at high volume can be dangerous if the output of the headphone or earphone connectors do not comply with specifications of EN 50332-2. The headphone output connector of your computer complies with EN 50332-2 Sub clause 7. This specification limits the computer's maximum wide band true RMS output voltage to 150 mV. To help protect against hearing loss, ensure that the headphones or earphones you use also comply with EN 50332-2 (Clause 7 limits) for a wide band characteristic voltage of 75 mV. Using headphones that do not comply with EN 50332-2 can be dangerous due to excessive sound pressure levels.

If your Lenovo computer came with headphones or earphones in the package, as a set, the combination of the headphones or earphones and the computer already complies with the specifications of EN 50332-1. If different headphones or earphones are used, ensure that they comply with EN 50332-1 (Clause 6.5 Limitation Values). Using headphones that do not comply with EN 50332-1 can be dangerous due to excessive sound pressure levels.

Choking hazard notice

CHOKING HAZARD – Product contains small parts.

Keep away from children under three years.

Plastic bag notice

DANGER

Plastic bags can be dangerous. Keep plastic bags away from babies and children to avoid danger of suffocation.

© Copyright Lenovo 2018

Glass parts notice

CAUTION:
Some parts of your product may be made of glass. This glass could break if the product is dropped on a hard surface or receives a substantial impact. If glass breaks, do not touch or attempt to remove it. Stop using your product until the glass is replaced by trained service personnel.

Chapter 1. Product overview

This chapter provides basic information to help you get familiar with your computer.

Computer controls, connectors, and indicators

This section introduces hardware features of the computer.

Front view

Front view for ThinkPad 11e 5th Gen

1 Microphones	2 Camera
3 Camera status indicator	4 Speakers
5 System-status indicator	6 Touch pad

1 Microphones

The microphones capture sound and voice when used with a program capable of handling audio.

2 Camera

The camera enables you to take pictures or hold a video conference. For more information, see “Using the cameras” on page 31.

3 Camera status indicator

When this indicator is on, the camera is in use.

© Copyright Lenovo 2018

4 Speakers

Your computer is equipped with a pair of stereo speakers.

5 System-status indicator

The illuminated dot in the ThinkPad® logo functions as a system-status indicator. For more information, see “Status indicators” on page 6.

6 Touch pad

Your computer is equipped with a touch pad under the bottom edge of the keyboard. The touch pad enables you to move the pointer, without the use of a conventional mouse. For more information, see “Using the touch pad” on page 25.

Front view for ThinkPad Yoga 11e 5th Gen

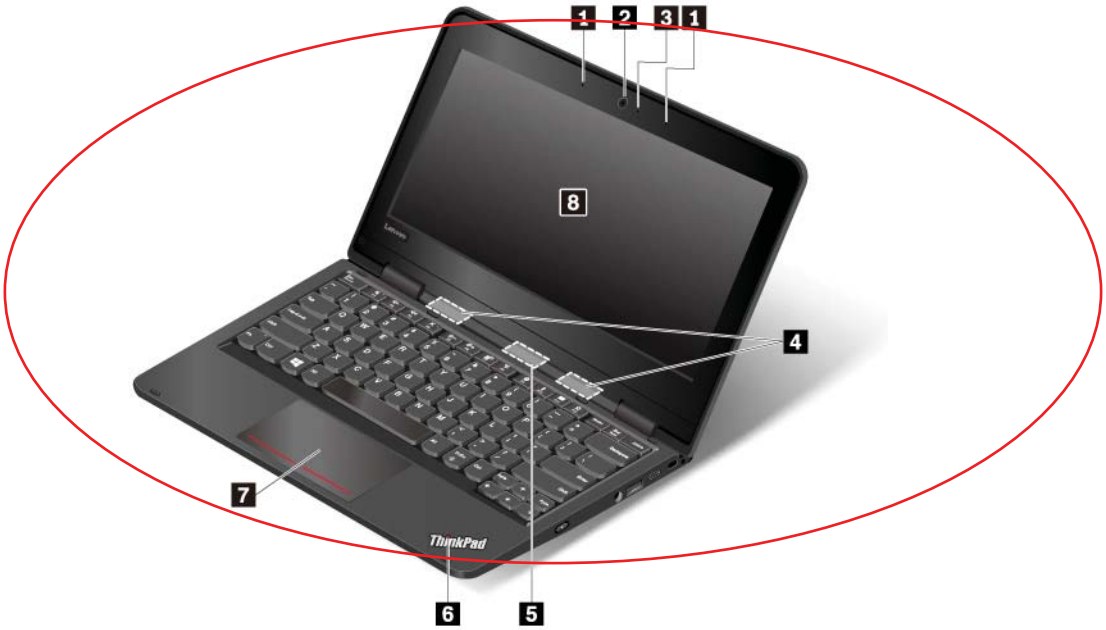

1 Microphones	2 Front camera
3 Front camera status indicator	4 Speakers
5 Rear camera	6 System-status indicator
7 Touch pad	8 Multi-touch screen

1 Microphones

The microphones capture sound and voice when used with a program capable of handling audio.

2 Front camera

The camera enables you to take pictures or hold a video conference. For more information, see “Using the cameras” on page 31.

3 Front camera status indicator

When this indicator is on, the front camera is in use.

4 Speakers

Your computer is equipped with a pair of stereo speakers.

5 Rear camera

The camera enables you to take pictures or hold a video conference. For more information, see “Using the cameras” on page 31.

6 System-status indicator

The illuminated dot in the ThinkPad® logo functions as a system-status indicator. For more information, see “Status indicators” on page 6.

7 Touch pad

Your computer is equipped with a touch pad under the bottom edge of the keyboard. The touch pad enables you to move the pointer, without the use of a conventional mouse. For more information, see “Using the touch pad” on page 25.

8 Multi-touch screen

The multi-touch screen enables you to use your computer with simple touch gestures. For more information, see “Using the multi-touch screen” on page 21.

Left-side view

1 Pen tether hole	2 Power connector
3 Ethernet connector	4 HDMI™ connector
5 Always On USB 3.0 connector	6 MicroSD card slot

1 Pen tether hole

The ThinkPad Pen Pro (an electronic pen) might be shipped with some computer models. To protect your pen from theft or loss, use a tether to tie the pen through the pen tether hole.

Notes:

- The tether does not come with your computer or the ThinkPad Pen Pro.
- Do not hang the computer with the tether.

For more information, see “ThinkPad Pen Pro” on page 35.

2 Power connector

The power connector enables you to connect the computer to ac power.

3 Ethernet connector

The Ethernet connector enables you to connect the computer to a local area network (LAN).

DANGER

To avoid the risk of electrical shock, do not connect the telephone cable to the Ethernet connector. You can only connect an Ethernet cable to this connector.

The Ethernet connector has two network status indicators. When the green indicator is on, the computer is connected to a LAN. When the yellow indicator blinks, data is being transmitted.

Note: If the computer is connected to a docking station, use the Ethernet connector on the docking station instead of the one on the computer.

4 High-Definition Multimedia Interface (HDMI) connector

The HDMI connector is a digital audio and video interface. It enables you to connect your computer to a compatible digital audio device or video monitor, such as a DVD player or an HDTV.

5 Always On USB 3.0 connector

By default, the Always On USB 3.0 connector enables you to charge the USB-compatible devices in the following situations:

- When your computer is on or in sleep mode
- When your computer is off or in hibernation mode, but connected to ac power

Attention: When you attach a USB cable to this connector, ensure that the USB mark is facing upward. Otherwise the connector might get damaged.

To charge these devices when the computer is off or in hibernation mode, and the computer is not connected to ac power, do the following:

1. Start the Lenovo Companion program. See “Accessing Lenovo programs” on page 13.
2. Click **Hardware Settings** → **Always On USB**.
3. Locate the **Always On USB** section and follow the instructions on the screen to make your preferred setting.

6 MicroSD card slot

You can insert a microSD card into the microSD card slot for data access or storage. For more information, see “Using a media card” on page 31.

Right-side view

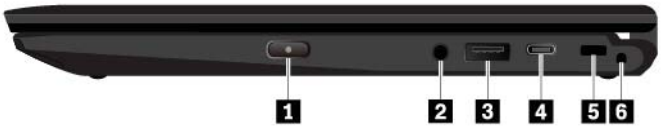

1 Power button	2 Audio connector
3 USB 3.0 connector	4 USB-C™ connector
5 Security-lock slot	6 Pen tether hole

1 Power button

You can press the power button to turn on the computer or put the computer to sleep mode.

To turn off the computer, open the Start menu, click ⏻ **Power**, and then click **Shut down**.

If your computer is unresponsive, you can turn off the computer by pressing and holding the power button for four or more seconds. If the computer cannot be turned off, see “Computer stops responding” on page 66.

You also can define what the power button does. For example, by pressing the power button, you can turn off the computer or put the computer to sleep or hibernation mode. To change what the power button does, do the following:

1. Go to Control Panel, and then change the view of Control Panel from Category to Large icons or Small icons.
2. Click **Power Options → Choose what the power buttons do**.
3. Follow the instructions on the screen.

2 Audio connector

You can connect headphones or a headset with a 3.5-mm (0.14-inch), 4-pole plug to the audio connector to listen to the sound from the computer.

If you are using a headset with a function switch, do not press this switch while using the headset. If you press the switch, the headset microphone is disabled, and the integrated microphones on the computer are enabled instead.

Note: The audio connector does not support a conventional microphone. For more information, see “Using audio features” on page 30.

3 USB 3.0 connector

You can use the USB 3.0 connector to connect USB-compatible devices, such as a USB keyboard, USB mouse, USB storage device, or USB printer.

Attention: When you attach a USB cable to this connector, ensure that the USB mark is facing upward. Otherwise the connector might get damaged.

4 USB-C connector

The USB-C connector on your computer supports the USB Type-C™ standard. With an appropriate USB-C cable connected, you can use the connector to transfer data, charge your device, or connect your computer to external displays.

Lenovo provides various USB-C accessories to help you expand your computer functionality. For more information, go to:

http://www.lenovo.com/essentials

Note: When the battery power is below 10%, the USB-C accessories connected to the USB-C connector might not work correctly.

5 Security-lock slot

To protect your computer from theft, lock your computer to a desk, table, or other fixture through a security cable lock that fits this security-lock slot.

Note: You are responsible for evaluating, selecting, and implementing the locking device and security feature. Lenovo makes no comments, judgments, or warranties about the function, quality, or performance of the locking device and security feature.

6 Pen tether hole

The ThinkPad Pen Pro (an electronic pen) might be shipped with some computer models. To protect your pen from theft or loss, use a tether to tie the pen through the pen tether hole.

Notes:

- The tether does not come with your computer or the ThinkPad Pen Pro.
- Do not hang the computer with the tether.

For more information, see “ThinkPad Pen Pro” on page 35.

Bottom view

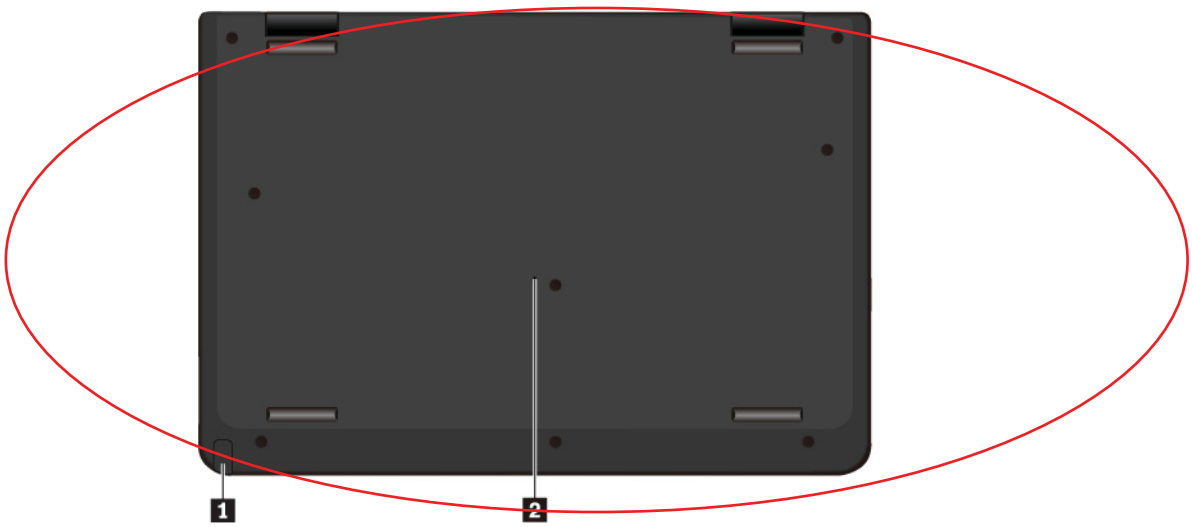

1 Pen slot	2 Emergency-reset hole

1 Pen slot

The ThinkPad Pen Pro (an electronic pen) might be shipped with some computer models. Use the pen slot to store the pen. For more information, see “ThinkPad Pen Pro” on page 35.

2 Emergency-reset hole

If the computer stops responding and you cannot turn it off by pressing the power button, remove the ac power adapter. Then, insert a straightened paper clip into the emergency-reset hole to reset the computer.

Status indicators

This topic provides information about locating and identifying the various status indicators on your computer.

Note: Depending on the model, your computer might look different from the following illustrations.

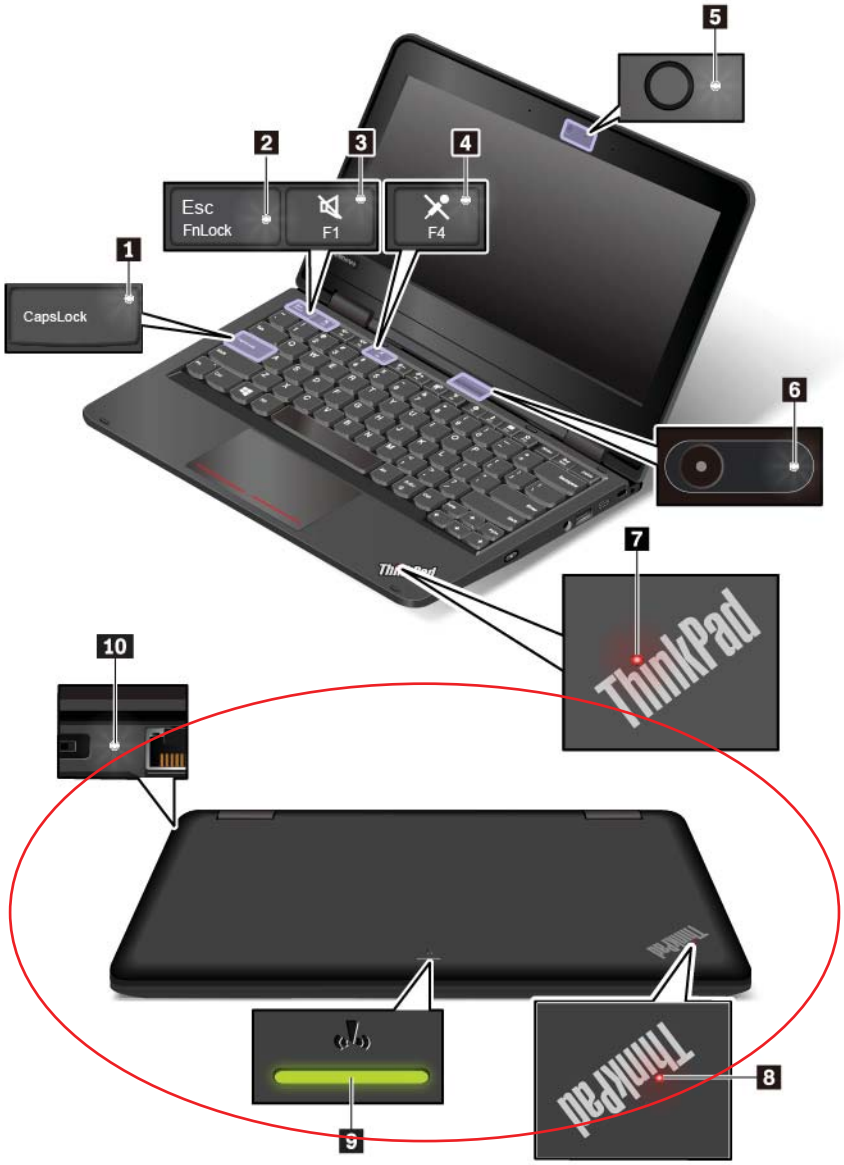

1 Caps Lock indicator

When this indicator is on, you can type uppercase letters by directly pressing the letter keys.

2 Fn Lock indicator

This indicator shows the status of Fn Lock function. For more information, see “Using the special keys” on page 24.

3 Speaker-mute indicator

When this indicator is on, the speakers are muted.

4 Microphone-mute indicator

When this indicator is on, the microphones are muted.

5 Front camera status indicator

When this indicator is on, the front camera is in use.

6 Rear camera status indicator

When this indicator is on, the rear camera is in use.

7 8 System status indicators

The indicator in the ThinkPad logo on the computer lid and the indicator in the power button show the system status of your computer.

- **Blinks for three times:** The computer is initially connected to power.
- **On:** The computer is on (in normal mode).
- **Off:** The computer is off or in hibernation mode.
- **Blinks rapidly:** The computer is entering sleep or hibernation mode.
- **Blinks slowly:** The computer is in sleep mode.

9 Wireless-status indicator

The wireless-status indicator is located on the outer lid of the computer and it helps you identify the wireless status of your computer.

- **Solid green:** The wireless features of the computer are on.
- **Off:** The wireless features of the computer are off.

10 ac power status indicator

This indicator shows the ac power and battery power status of the computer.

- **White:** connected to ac power (battery power 90%–100%)
- **Amber:** connected to ac power (battery power 0%–90%)
- **Off:** not connected to ac power

Important product information

This section provides information to help you locate the following:

- Machine type and model information
- FCC ID and IC Certification information
- Windows operating systems information

Machine type and model information

When you contact Lenovo for help, the machine type and model information helps the technicians to identify your computer and provide faster service.

The following illustration shows where to find the machine type and model information of your computer.

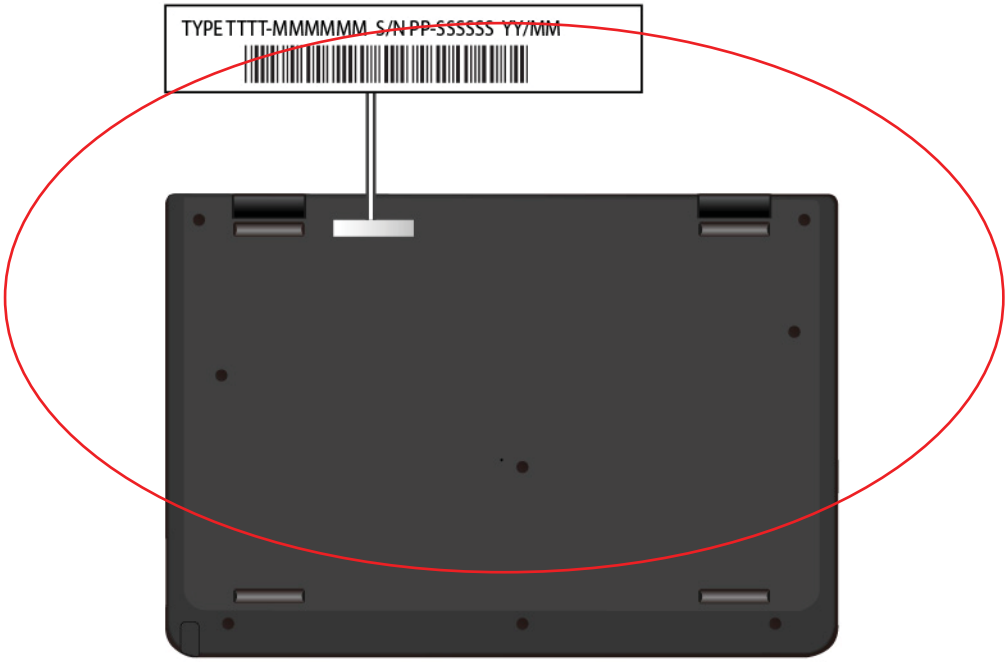

FCC ID and IC Certification number

The FCC and IC Certification information is identified by a label on the computer as shown in the following illustration.

Note: Depending on the model, your computer might look different from the following illustration.

The content of this label differs depending on the wireless modules that come with your computer:

- For a preinstalled wireless module, this label identifies the actual FCC ID and IC certification number for the wireless module installed by Lenovo.

  Note: Do not remove or replace a preinstalled wireless module by yourself. For replacement, you must contact Lenovo service first. Lenovo is not responsible for any damage caused by unauthorized replacement.

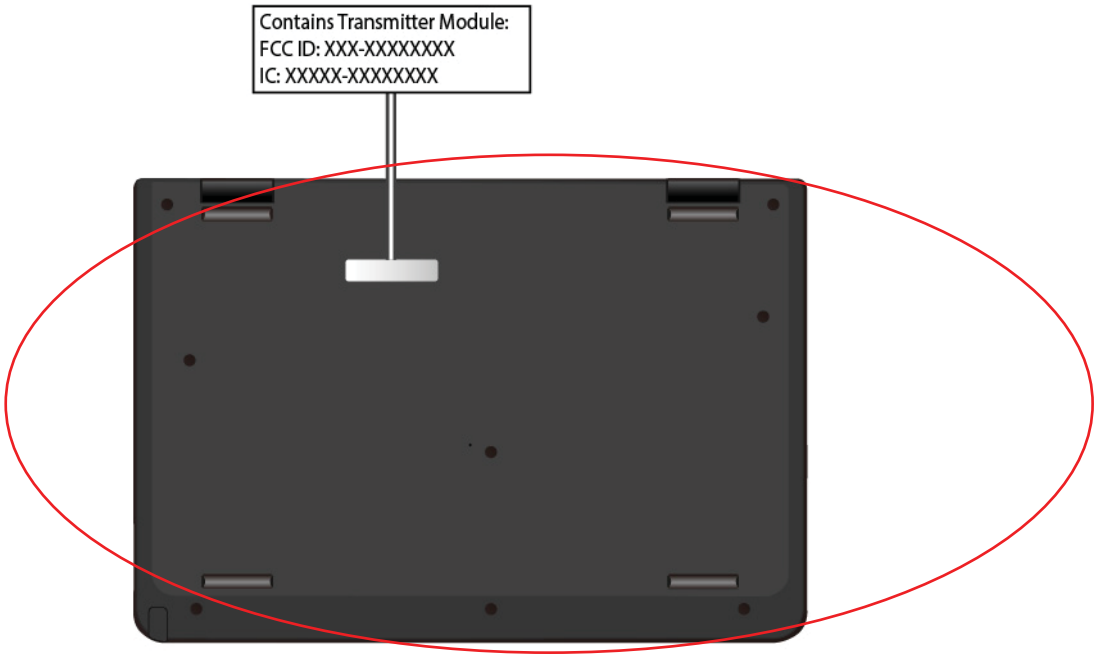

Labels for the Windows operating systems

Windows® 10 Genuine Microsoft® label: Your computer might have a Genuine Microsoft label affixed to its cover depending on the following factors:

- Your geographic location
- Date when your computer was manufactured
- Version of Windows 10 that is preinstalled

Go to https://www.microsoft.com/en-us/howtotell/Hardware.aspx for illustrations of the various types of Genuine Microsoft labels.

- In the People's Republic of China, the Genuine Microsoft label is required on all computer models preinstalled with any version of Windows 10.
- In other countries and regions, the Genuine Microsoft label is required only on computer models licensed for Windows 10 Pro.

The absence of a Genuine Microsoft label does not indicate that the preinstalled Windows version is not genuine. For details on how to tell whether your preinstalled Windows product is genuine, refer to the information provided by Microsoft at:

https://www.microsoft.com/en-us/howtotell/default.aspx

There are no external, visual indicators of the Product ID or Windows version for which the computer is licensed. Instead, the Product ID is recorded in the computer firmware. Whenever a Windows 10 product is installed, the installation program checks the computer firmware for a valid, matching Product ID to complete the activation.

In some cases, an earlier Windows version might be preinstalled under the terms of the Windows 10 Pro license downgrade rights.

Computer features

The computer features introduced in this topic cover various models. Some computer features might be available only on specific models.

Microprocessor

To view the microprocessor information of your computer, right-click the **Start** button and then select **System**.

Memory

Depending on your model, your computer came with one of the following:

- Double data rate 4 (DDR4) small outline dual in-line memory module (SODIMM) (soldered memory)
- Double data rate 3 (DDR3) low power (LP) small outline dual in-line memory module (SODIMM) (soldered memory)

Storage device

- M.2 solid-state drive

Display

- Brightness control
- Color display with Thin Film Transistor (TFT) technology
- Color display with In-Plane Switching (IPS) or Twisted Nematic (TN) technology
- Display size: 294.64 mm (11.6 inches)
- Display resolution: 1366 x 768 pixels
- Multi-touch technology (available on some models)

Keyboard

- Six-row keyboard
- Function keys
- Touch pad

Connectors and slots

- ac power connector
- Audio connector
- Ethernet connector
- HDMI connector
- MicroSD slot
- One Always On USB 3.0 connector
- One USB-C connector
- One USB 3.0 connector
- Pen slot
- Pen tether holes

Security features

- Security-lock slot

- Trusted Platform Module (TPM)

Wireless features

- Bluetooth
- Wireless LAN

Others

- Front camera
- Microphones
- Rear camera (This is not available on non-yoga models.)

Computer specifications

Size

- Width: 300 mm (11.81 inches)
- Depth: 210 mm (8.27 inches)
- Thickness:
  - Non-touch models: 21.9 mm (0.86 inches)
  - Touch models: 22.55 mm (0.89 inches)

Maximum heat output (depending on the model)

- 45 W (154 Btu/hr)
- 65 W (222 Btu/hr)

Power source (ac power adapter)

- Sine-wave input at 50 Hz to 60 Hz
- Input rating of the ac power adapter: 100 V to 240 V ac, 50 Hz to 60 Hz

Operating environment

Maximum altitude (without pressurization)

- 3048 m (10 000 ft)

Temperature

- At altitudes up to 2438 m (8000 ft)
  - Operating: 5°C to 35°C (41°F to 95°F)
  - Storage: 5°C to 43°C (41°F to 109°F)
- At altitudes above 2438 m (8000 ft)
  - Maximum temperature when operating under the unpressurized condition: 31.3°C (88°F)

Note: When you charge the battery, its temperature must be at least 10°C (50°F).

Relative humidity

- Operating: 8% to 95% at wet-bulb temperature 23°C (73°F)

- Storage: 5% to 95% at wet-bulb temperature 27°C (81°F)

If possible, place your computer in a well-ventilated and dry area without direct exposure to sunshine.

Attention:

- Keep electrical appliances such as electric fans, radio, air conditioners, and microwave ovens away from the computer. The strong magnetic fields generated by these appliances can damage the monitor and data on the internal storage drive.
- Do not place any beverages on top of or beside the computer or other attached devices. If liquid is spilled on or in the computer or an attached device, a short circuit or other damage might occur.
- Do not eat or smoke over your keyboard. Particles that fall into your keyboard can cause damage.

Lenovo programs

Your computer comes with Lenovo programs to help you work easily and securely.

Accessing Lenovo programs

To access Lenovo programs on your computer, do the following:

1. Open the Start menu and locate a program by the program name.
2. If you do not find the program in the program list, search for the program in the search box.

An introduction to Lenovo programs

This topic provides a brief introduction to Lenovo programs. Depending on your computer model, some of the programs might not be available.

The available programs are subject to change without notice. To learn more about the programs and other computing solutions offered by Lenovo, go to:

http://www.lenovo.com/support

Hotkey Features Integration	Hotkey Features Integration is a utility package that enables you to select and install utilities specifically for the special keys and buttons on your computer. The special keys and buttons are designed to meet accessibility and usability requirements. Installing related utilities enables full functionality of the special keys and buttons.
Lenovo Companion	Your computer's best features and capabilities should be easy to access and understand. With Lenovo Companion, they are. Use Lenovo Companion to do the following: • Optimize your computer performance, monitor your computer health, and manage updates. • Access your user guide, check warranty status, and view accessories customized for your computer. • Read how-to articles, explore Lenovo forums, and stay up-to-date on technology news with articles and blogs from trusted sources. • Configure hardware settings. • Create and manage your Lenovo ID. This app is filled with exclusive Lenovo content to help you learn more about what you can do with your Lenovo computer.

Chapter 2. Using your computer

This chapter provides information to help you use the various features provided by your computer.

Registering your computer

When you register your computer, information is entered into a database, which enables Lenovo to contact you if there is a recall or other severe problem. In addition, some locations offer extended privileges and services to registered users.

When you register your computer with Lenovo, you also will receive the following benefits:

- Quicker service when you call Lenovo for help
- Automatic notification of free software and special promotional offers

To register your computer with Lenovo, go to http://www.lenovo.com/register and follow the instructions on the screen.

Frequently asked questions

This topic provides a few tips to help you optimize the use of your ThinkPad notebook computers.

To ensure the best computer performance, go to the following Web site to find information such as aids for troubleshooting and answers to frequently asked questions:

http://www.lenovo.com/support/faq

Can I get my user guide in another language?

To download the user guide in another language, go to http://www.lenovo.com/support. Then follow the instructions on the screen.

How do I get help about the Windows operating system?

The Windows help information system provides you with detailed information about using the Windows operating system so that you can get the most of your computer. To access the Windows help information system, click the **Start** button to open the Start menu, and then click **Get Help**. Additionally, you can use the Cortana® personal assistant to search for help, apps, files, settings, and so on.

How do I access Control Panel?

Click the **Start** button to open the Start menu, and then click **Windows System** → **Control Panel**.

How to turn off my computer?

Open the Start menu, click ⏻ **Power**, and then click **Shut down**.

How to partition my storage drive?

To partition the storage drive of your computer in the Windows operating system, refer to https://support.lenovo.com/solutions/ht503851.

How do I use battery power more effectively when I am on the go?

- To conserve power, or to suspend operation without exiting programs or saving files, see “Power-saving modes” on page 28.

© Copyright Lenovo 2018

- To achieve the best balance between performance and power saving, create and apply an appropriate power plan. See “Managing the battery power” on page 28.
- If your computer will be turned off for an extended period of time, you can prevent battery power from draining by removing the battery.

How do I securely dispose of data stored on the internal storage drive?

- Study Chapter 5 “Security” on page 45 to find out how you can protect your computer from theft and unauthorized use.
- Before you dispose of the data on the internal storage drive, ensure that you read “Deleting data from your storage drive” on page 48.

How do I attach an external display?

- Refer to “Using an external display” on page 32.
- With the Extend desktop function, you can display output on both the computer display and an external display.

How do I attach or replace a device?

Refer to the appropriate topic in Chapter 9 “Replacing devices” on page 83.

I have been using the computer for some time already, and is getting slower. What should I do?

- Follow the “General tips for preventing problems” on page 65.
- Diagnose problems yourself by using the preinstalled diagnostic software. See “Diagnosing problems with Lenovo Companion” on page 65.
- Check for recovery solutions in Chapter 8 “Recovery information” on page 81.

Print the following topics and keep them with your computer in case you are unable to access this electronic user guide when necessary.

- “Installing the Windows 10 operating system” on page 51
- “Computer stops responding” on page 66
- “Power problems” on page 77

Operating modes

Your computer features four operating modes: notebook mode, stand mode, tablet mode, and tent mode. You can switch between different modes according to your preference and working convenience.

Note: Depending on the model, your computer might look different from the illustrations in this topic.

Rotating the computer display

This topic provides instructions on how to rotate the display of your computer properly. This topic also provides information about the operating modes of your computer and corresponding display angle ranges.

You can open the computer display to any angle within a range of up to 360 degrees as shown in the following illustration.

Attention: Do not rotate the computer display with too much force, otherwise the computer display or hinges might get damaged. Do not apply too much force to the upper-right or upper-left corner of the computer display.

Notebook mode

You can use the computer in the notebook mode in scenarios that require using a keyboard and a mouse, such as editing documents and writing e-mails.

Attention: The angle between the front of the computer display and the keyboard for the notebook mode is at most 190 degrees. Do not rotate the computer display with too much force, otherwise the computer display or hinges might get damaged. Do not apply too much force to the upper-right or upper-left corner of the computer display.

Open the computer display slowly as shown in the following illustration. Your computer is now in the notebook mode.

In the notebook mode, the keyboard and the touch pad are automatically enabled.

Stand mode

You can use your computer in the stand mode in scenarios that require limited interaction with the screen, such as viewing photos and playing videos.

Attention: The angle between the front of the computer display and the keyboard for the stand mode is above 190 degrees and below 350 degrees. Do not rotate the computer display with too much force, otherwise the computer display or hinges might get damaged. Do not apply too much force to the upper-right or upper-left corner of the computer display.

If your computer is in the notebook mode, do the following to turn the computer from the notebook mode into the stand mode:

1. Slowly rotate the display clockwise until the back of the display is facing the base cover.

2. Position your computer as shown. Your computer is now in the stand mode.

In the stand mode, the keyboard and the touch pad are automatically disabled. However, you can control some functions of your computer through the special buttons and the multi-touch screen, without the use of the keyboard and the touch pad. For more information, see “Using the special buttons” on page 24 and “Using the multi-touch screen” on page 21.

Tablet mode

You can use the computer in the tablet mode in scenarios that require frequent interaction with the screen, such as browsing the Web site.

Attention: The angle between the front of the computer display and the keyboard for the tablet mode is 360 degrees. Do not rotate the computer display with too much force, otherwise the computer display or hinges might get damaged. Do not apply too much force to the upper-right or upper-left corner of the computer display.

If your computer is in the stand mode, do the following to turn the computer from the stand mode into the tablet mode:

1. Position your computer as shown and slowly rotate the computer display clockwise.

2. Position your computer as shown. Your computer is now in the tablet mode. By default, the autorotate feature is enabled.

In the tablet mode, the keyboard and the touch pad are automatically disabled. However, you can control some functions of your computer through the special buttons and the multi-touch screen, without the use of the keyboard and the touch pad. For more information, see “Using the special buttons” on page 24 and “Using the multi-touch screen” on page 21.

Tent mode

You can use your computer in the tent mode in scenarios that require limited interaction with the screen, such as viewing photos and making a presentation.

Attention: The angle between the front of the computer display and the keyboard for the tent mode is at least 270 degrees and at most 340 degrees. Do not rotate the computer display with too much force, otherwise the computer display or hinges might get damaged. Do not apply too much force to the upper-right or upper-left corner of the computer display.

If your computer is in the tablet mode, do the following to turn the computer from the tablet mode into the tent mode:

1. Slowly rotate your computer display counterclockwise to any angle within a range of 270 degrees to 340 degrees.

   Note: The degrees refer to the angle degrees between the computer display and the keyboard.

2. Position your computer as shown. Your computer is now in the tent mode.

In the tent mode, the keyboard and the touch pad are automatically disabled. However, you can control some functions of your computer through the special buttons and the multi-touch screen, without the use of the keyboard and the touch pad. For more information, see “Using the special buttons” on page 24 and “Using the multi-touch screen” on page 21.

Using the multi-touch screen

This topic provides instructions on how to use the multi-touch screen that is available on some models.

Notes:

- Your computer screen might look different from the following illustrations.
- Depending on the program you use, some gestures might not be available.

The following table introduces some frequently used gestures.

Touch gesture (touch models only)	Description
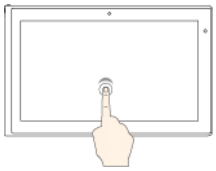	**Touch**: Tap. **Mouse action**: Click. **Function**: Open an app or perform an action on an open app, such as **Copy**, **Save**, and **Delete**, depending on the app.
	Touch: Tap and hold. **Mouse action**: Right-click. **Function**: Open a menu with multiple options.
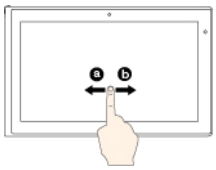	**Touch**: Slide. **Mouse action**: Scroll the mouse wheel, move the scroll bar, or click the scroll arrow. **Function**: Scroll through items, such as lists, pages, and photos.
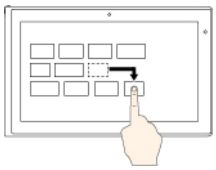	**Touch**: Drag an item to the location you want. **Mouse action**: Click, hold, and drag an item. **Function**: Move an object.
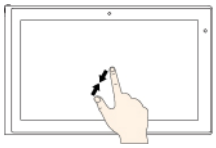	**Touch**: Move two fingers closer together. **Mouse action**: Press the Ctrl key while scrolling the mouse wheel backward. **Function**: Zoom out.
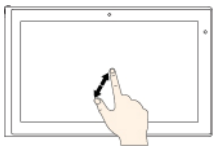	**Touch**: Move two fingers farther apart. **Mouse action**: Press the Ctrl key while scrolling the mouse wheel forward. **Function**: Zoom in.
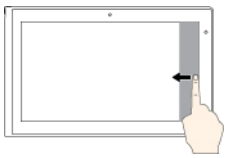	**Touch**: Swipe in from the right edge. **Mouse action**: Click the action center icon in the Windows notification area. **Function**: Open the action center to see your notifications and quick actions.

Touch gesture (touch models only)	Description
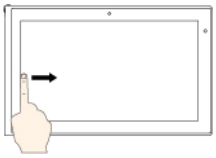	**Touch**: Swipe in from the left edge. **Mouse action**: Click the task-view icon on the taskbar. **Function**: View all your open windows in task view.
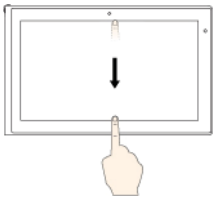	• **Short swipe for full-screened app or when your computer is in the tablet mode** **Touch**: Swipe downwards shortly from the top edge. **Mouse action**: Move your pointer to the top edge of the screen. **Function**: Show a hidden title bar. • **Long swipe when your computer is in the tablet mode** **Touch**: Swipe in from the top edge to the bottom edge. **Mouse action**: From the top edge of the screen, click and hold, move the pointer to the bottom of the screen, and then release. **Function**: Close the current app.

Tips on using the multi-touch screen

- The multi-touch screen is a glass panel covered with a plastic film. Do not apply pressure or place any metallic object on the screen, which might damage the touch panel or cause it to malfunction.
- Do not use fingernails, gloved fingers, or inanimate objects for input on the screen.
- Regularly calibrate the accuracy of the finger input to avoid a discrepancy.

Tips on cleaning the multi-touch screen

- Turn off the computer before cleaning the multi-touch screen.
- Use a dry, soft, and lint-free cloth or a piece of absorbent cotton to remove fingerprints or dust from the multi-touch screen. Do not apply solvents to the cloth.
- Gently wipe the screen using a top-down motion. Do not apply any pressure on the screen.

Using the special buttons

The computer is equipped with special buttons as shown in the following illustration. You can control some functions of your computer through the special buttons, without the use of the keyboard.

1 Power button: Press the power button to turn on the computer.

Using the special keys

Your computer has several special keys to help you work more easily and effectively.

1 Windows logo key

Press the Windows logo key to open the Start menu. For information about using the Windows logo key with other keys, see the help information system of the Windows operating system.

2 3 Fn key and function keys

You can configure the Fn key and function keys in the Keyboard Properties window by doing the following:

1. Go to Control Panel, and then change the view of Control Panel from Category to Large icons or Small icons.
2. Click **Lenovo - Keyboard Manager** and the Keyboard Manager window is displayed.
3. Select the options of your preference.

- Fn + Esc FnLock Switch the key function between the standard F1–F12 function and the special function printed as an icon on each key. When the Fn Lock indicator is off, you can use the default function. You can change the default function in the Keyboard Properties window.

- F1 Mute or unmute the speakers.

  If you mute the sound and turn off your computer, the sound will remain muted when you turn on your computer. To turn on the sound, press F2 or F3.
- F2 Decrease the speaker volume.
- F3 Increase the speaker volume.
- F4 Mute or unmute the microphones.
- F5 Darken the computer display.
- F6 Brighten the computer display.
- F7 Manage external displays.
- F8 Enable or disable the built-in wireless features.
- F9 Open the Settings window.
- F10 Enable or disable the built-in Bluetooth features.
- F11 Open a keyboard setting page.
- F12 Invoke the function defined by yourself. To define or change the action for the F12 key, do the following:
  1. Open Lenovo Companion. See “Accessing Lenovo programs” on page 13.
  2. Click **Hardware Settings** and then click the input icon .
  3. Locate the **Keyboard: User-defined Key** section and follow the instructions on the screen to complete the setting.

  On the **Input** page, you can also define different functions for the key combinations with F12, such as Shift +F12, Alt+F12, or Ctrl+F12.

Key combinations

- Fn + PrtSc: Open the Snipping Tool program.
- **Fn+B**: This key combination has the same function as the Break key on a conventional external keyboard.
- **Fn+K**: This key combination has the same function as the ScrLK or Scroll Lock key on a conventional external keyboard.
- **Fn+P**: This key combination has the same function as the Pause key on a conventional external keyboard.
- **Fn+S**: This key combination has the same function as the SysRq key on a conventional external keyboard.
- **Fn+4**: Press Fn+4 to put the computer to sleep mode. To wake up the computer, press the Fn key or the power button.
- **Fn+Left arrow key**: This key combination has the same function as the Home key.
- **Fn+Right arrow key**: This key combination has the same function as the End key.

Using the touch pad

Note: Your computer might look slightly different from the following illustration.

Your computer is equipped with a touch pad 1 under the bottom edge of the keyboard. To move the pointer 2 on the screen, slide your fingertip over the touch pad in the direction in which you want the pointer to move. The left and right bottoms of the touch pad work as click buttons. The functions correspond to those of the left and right mouse buttons on a conventional mouse.

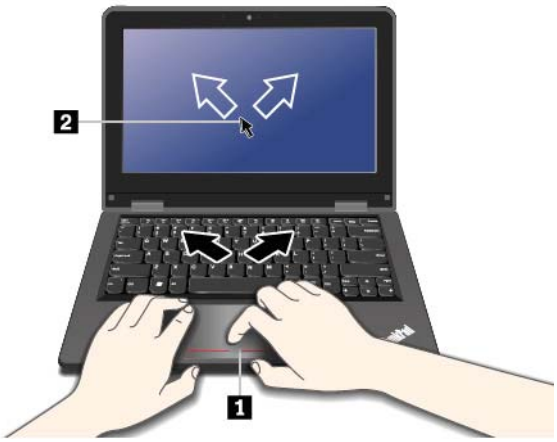

Customizing the touch pad

To customize the touch pad, do the following:

1. Go to Control Panel and click **Hardware and Sound** → **Mouse**.
2. Follow the instructions on the screen.

Power management

This section provides information about how to use ac power and battery power to achieve the best balance between performance and power management.

Using the ac power adapter

The power to run your computer can come either from the battery or from ac power. While you use ac power, the battery charges automatically.

Your computer comes with an ac power adapter and a power cord.

- ac power adapter: Converts ac power for notebook computer use.
- Power cord: Connects the ac outlet and the ac power adapter.

Connecting the ac power adapter

To connect the computer to ac power, ensure that you follow the steps in order:

Attention: Using an improper power cord might severely damage your computer.

1. Connect the power cord to the ac power adapter.
2. Connect the ac power adapter to the power connector of the computer.
3. Connect the power cord to an electrical outlet.

Tips on using the ac power adapter

- When the ac power adapter is not in use, disconnect it from the electrical outlet.

- Do not bind the power cord tightly around the ac power adapter transformer pack when it is connected to the transformer.

Using the battery

When you use your computer away from electrical outlets, you depend on battery power to keep your computer running. Different computer components consume power at different rates. The more you use the power-intensive components, the faster you consume battery power.

Spend more time unplugged with ThinkPad batteries. Mobility has revolutionized business by enabling you to take your work wherever you go. With ThinkPad batteries, you are able to work longer without being tied to an electrical outlet.

Checking the battery status

Move your pointer to the battery-status icon in the Windows notification area to check the battery status. The battery-status icon displays the percentage of battery power remaining and how long you can use your computer before you must charge the battery.

The rate at which you use battery power determines how long you can use the battery of your computer between charges. Because every computer user has individual habits and needs, it is difficult to predict how long a battery charge lasts. There are two main factors:

- How much energy is stored in the battery when you begin to work
- The way you use your computer, for example:
  - How often you access the storage drive
  - How bright you make the computer display
  - How often you use the wireless feature

Charging the battery

When you find that the remaining battery power is low, charge your battery or replace the battery with a charged battery.

If an ac outlet is convenient, connect the computer to ac power. The battery is fully charged in about four to eight hours. The actual charging time depends on the battery size, the physical environment, and whether you are using the computer. You can check the battery charging status at any time through the battery-status icon in the Windows notification area.

Note: To maximize the life of the battery, the computer does not start recharging the battery if the remaining power is greater than 95%.

Tips on charging the battery

- Before you charge the battery, ensure that the battery temperature is higher than 10°C (50°F) and lower than 35°C (95°F).
- Charge the battery in any of the following conditions:
  - A new battery is installed.
  - The percentage of power remaining is low.
  - The battery has not been used for a long time.

Maximizing the battery life

To maximize the life of the battery, do the following:

- Use the battery until the charge is depleted.
- Recharge the battery completely before using it. You can see whether the battery is fully charged from the battery-status icon in the Windows notification area.
- Always use power management features such as power-saving modes.

Managing the battery power

To achieve the best balance between performance and power saving, adjust your power plan settings. To adjust power plan settings, do the following:

1. Go to Control Panel, and then change the view of Control Panel from Category to Large icons or Small icons.
2. Click **Power Options**.
3. Follow the instructions on the screen.

For more information, see the Windows help information system.

Power-saving modes

There are several modes that you can use at any time to conserve power. This section introduces each mode and gives tips on the effective use of battery power.

- **Sleep mode**

  In sleep mode, your work is saved to memory, and then the storage drive and the computer display are turned off. When your computer wakes up, your work is restored within seconds.

  To put your computer to sleep mode, open the Start menu, click ⏻ **Power**, and then click **Sleep**.

- **Hibernation mode**

  By using this mode, you can turn off your computer completely without saving files or exiting any programs that are running. When the computer enters hibernation mode, all open programs, folders, and files are saved to the storage drive, and then the computer turns off.

  To put the computer to hibernation mode, define what the power button does first, and then press the power button to put the computer to hibernation mode.

  If you put your computer to hibernation mode with the wake-up function disabled, the computer does not consume any power. The wake-up function is disabled by default. If you put your computer to hibernation mode with the wake-up function enabled, the computer consumes a small amount of power.

  To enable the wake-up function, do the following:

  1. Open Control Panel, view Control Panel by Category, and then click **System and Security**.
  2. Click **Administrative Tools**.
  3. Double-click **Task Scheduler**. If you are prompted for an administrator password or confirmation, type the password or provide confirmation.
  4. From the left pane, select the task folder for which you want to enable the wake-up function. The scheduled tasks are displayed.
  5. Click a scheduled task, and then click the **Conditions** tab.
  6. Under **Power**, select **Wake the computer to run this task**.

- **Wireless off**

  When you are not using the wireless features, such as Bluetooth or wireless LAN, turn them off to help conserve power.

Cabled Ethernet connections

With an Ethernet cable, you can connect your computer to a local network through the Ethernet connector on your computer.

The Ethernet connector has two network status indicators. When the green indicator is on, the computer is connected to a LAN. When the yellow indicator blinks, data is being transmitted.

Note: If the computer is connected to a supported docking station or a supported dock, use the Ethernet connector on the docking station or the dock instead of the one on the computer.

DANGER

Your computer has an Ethernet connector. To avoid the risk of electrical shock, do not connect the telephone cable to the Ethernet connector.

Wireless connections

Wireless connection is the transfer of data without the use of cables but by means of radio waves only.

Using the wireless-LAN connection

A wireless local area network (LAN) covers a relatively small geographic area, such as an office building or a house. Devices based on the 802.11 standards can connect to this type of network.

Your computer comes with a built-in wireless network card to help you establish wireless connections and monitor the connection status.

To establish a wireless-LAN connection, do the following:

1. Turn on the wireless feature. See “Using the special keys” on page 24.
2. Click the wireless-network-connection-status icon in the Windows notification area. A list of available wireless networks is displayed.
3. Double-click a network to connect to it. Provide required information if needed.

The computer automatically connects to an available and remembered wireless network when the location changes. If the available wireless network is secured, provide the password as required. For more information, see the Windows help information system.

Tips on using the wireless-LAN feature

To achieve the best connection, use the following guidelines:

- Place your computer so that there are as few obstacles as possible between the wireless-LAN access point and the computer.
- Open your computer cover to an angle of slightly more than 90 degrees.

Checking the wireless-LAN connection status

You can check the wireless-LAN connection status through the wireless-network-connection-status icon in the Windows notification area. The more bars encompassed, the better the signal is.

Using the Bluetooth connection

Bluetooth can connect devices that are within a short distance from one another. Bluetooth is commonly used in the following scenarios:

- Connecting peripheral devices to a computer
- Transferring data between hand-held devices and a personal computer
- Remotely controlling and communicating with devices such as mobile phones

Depending on the model, your computer might support the Bluetooth feature. To transfer data through the Bluetooth feature, do the following:

Note: It is not recommended to use the wireless feature (the 802.11 standards) of your computer simultaneously with a Bluetooth option. The data transmission speed can be delayed and the performance of the wireless feature can be degraded.

1. Do one of the following:
   - Press the Bluetooth-control key F10 and turn on the Bluetooth feature.
   - Open the Start menu, and then click **Settings** → **Devices** → **Bluetooth & other devices**. Turn on the **Bluetooth** switch to enable the Bluetooth feature.
2. Right-click the data that you want to send.
3. Select **Send To** → **Bluetooth Devices**.
4. Select a Bluetooth device, and then follow the instructions on the screen.

For more information, see the Windows help information system and the help information system of the Bluetooth device.

Using the Airplane mode

The Airplane mode is supported on the Windows 10 operating system. If the Airplane mode is enabled, all wireless features are disabled.

To enable or disable the Airplane mode, do the following:

1. Open the Start menu.
2. Click **Settings** → **Network & Internet** → **Airplane mode**.
3. Slide the control for **Airplane mode** to turn it on or off.

Using audio features

Your computer is equipped with the following items:

- Audio connector, 3.5 mm (0.14 inches) in diameter
- Microphones
- Speakers

Your computer also has an audio chip that enables you to enjoy various multimedia audio features, such as the following:

- Compliant with High Definition Audio
- Playback of MIDI and MP3 files
- Recording and playback of PCM and WAV files

- Recording from various sound sources, such as a headset attached

The following list provides information about supported functions of the audio devices attached to the connectors on your computer or the docking station.

- **Headset with a 3.5-mm (0.14-inch), 4-pole plug**: Headphone and microphone functions
- **Conventional headphone**: Headphone function

Note: The conventional microphone is not supported.

Using the cameras

Your computer might be equipped with two conventional cameras, a front camera and a rear camera. You can use the conventional cameras to take pictures and record videos.

To start the camera, open the Start menu, and tap **Camera**. When the camera starts, the green camera-in-use indicator turns on.

You can configure the camera settings to meet your needs, such as adjusting the video output quality. To configure the camera settings, do one of the following:

- Open the **Camera** app, and click the settings icon in the upper-right corner. Follow the instructions on the screen to configure the camera settings.
- Open the Start menu and click **Lenovo Companion → Hardware Settings → Display, Camera & Audio/Media**. Locate the **Camera** section and then follow the instructions on the screen to configure the camera settings.

Using a media card

Your computer has one media-card slot.

The media-card slot supports the following types of cards:

Note: Your computer does not support the content protection for recordable media (CPRM) feature for the SD card.

- MultiMediaCard (MMC)
- Secure Digital (SD) card
- Secure Digital eXtended-Capacity (SDXC) card
- Secure Digital High-Capacity (SDHC) card

Attention: When transferring data to or from a media card, such as an SD card, do not put your computer to sleep or hibernation mode before the data transfer is completed. Otherwise, your data could get damaged.

Installing a media card

To install a media card, do the following:

1. Locate the appropriate type of slot for your card. See “Computer controls, connectors, and indicators” on page 1.
2. Ensure that the metal contacts are facing down and toward the card slot.
3. Press the card firmly into the card slot.

If the plug-and-play feature is not enabled, do the following:

1. Go to Control Panel.

2. View Control Panel by Category. Click **Hardware and Sound**.
3. Click **Device Manager**. If you are prompted for an administrator password or confirmation, type the password or provide confirmation.
4. From the **Action** menu, select **Add legacy hardware**. The Add Hardware Wizard starts.
5. Follow the instructions on the screen.

Removing a media card

Attention:

- Stop all the activities involving the card before removing it. Otherwise, data on the card might get damaged or lost.
- Do not remove a card when the computer is in sleep or hibernation mode. Otherwise, the system might not respond when you try to resume operation.

To remove a media card, do the following:

1. Click the triangular icon in the Windows notification area to show hidden icons.
2. Right-click the **Safely Remove Hardware and Eject Media** icon.
3. Select the corresponding item to eject the card from the Windows operating system.
4. Press the card to eject it from your computer.
5. Remove the card and store it safely for future use.

Note: If you do not remove the card from your computer after you eject the card from the Windows operating system, the card can no longer be accessed. To access the card, you must remove it first, and then insert it again.

Using an external display

This section provides instructions on how to connect an external display, choose display modes, and change display settings.

You can use an external display such as a projector or a monitor to give presentations or to expand your workspace.

Your computer supports the following video resolution, if the external display also supports that resolution.

- Up to 3840 x 2160 pixels / 60 Hz, with an external display connected to the USB-C connector
- Up to 3840 x 2160 pixels / 30 Hz, with an external display connected to the HDMI connector

For more information about the external display, see the manuals that come with it.

Connecting an external display

You can use either a wired display or a wireless display. The wired display can be connected to a video connector such as the USB-C connector or the HDMI connector by a cable. The external display connected to the USB-C connector and the external display connected to the HDMI connector cannot be used simultaneously. The wireless display can be added through the Miracast® function.

- **Connecting a wired display**

  Note: When you connect an external monitor, a video interface cable with a ferrite core is required.

  1. Connect the external display to an appropriate video connector on your computer, such as the HDMI connector.

2. Connect the external display to an electrical outlet.
3. Turn on the external display.

If your computer cannot detect the external display, right-click on the desktop, and then click **Screen resolution/Display settings → Detect**.

- **Connecting a wireless display**

  Note: To use a wireless display, ensure that both your computer and the external display support the Miracast feature.

  Do one of the following:

  – Open the Start menu, and then click **Settings → Devices → Connected devices → Add a device**.

  – Click the action center icon in the Windows notification area. Click **Connect**. Select the wireless display and follow the instructions on the screen.

  For more information, see the Windows help information system.

Choosing a display mode

You can display your desktop and apps on the computer display, the external display, or both. To choose how to display the video output, press the display-mode switching key and then select a display mode you prefer.

There are four display modes:

- **PC screen only**: Displays the video output only on your computer screen.

  Note: Depending on the situation, you might see **Disconnect**, **PC screen only**, **Computer only**, or **Disconnect projector**.
- **Duplicate**: Displays the same video output on both your computer screen and an external display.
- **Extend**: Extends the video output from your computer display to an external display. You can drag and move items between the two displays.
- **Second screen only**: Shows the video output only on an external display.

  Note: Depending on the situation, you might see **Projector only** or **Second screen only**.

If you show programs using DirectDraw or Direct3D® in full-screen mode, only the main display shows the video output.

Changing display settings

You can change the settings for both the computer display and the external display. For example, you can define which one is the main display and which one is the secondary display. You also can change the resolution and orientation.

To change display settings, do the following:

1. Right-click on the desktop and select **Display settings**.
2. Select the display that you want to configure.
3. Change display settings as you want.

Note: If you set a higher resolution for the computer display than the external display, only part of the screen can be shown on the external display.

Traveling with your computer

This topic provides information to help you work with your computer when you are traveling.

Use the following travel tips to travel more confidently and efficiently with your computer.

- When your computer goes through the x-ray machines at airport security stations, it is important to keep your eyes on the computer at all times to prevent theft.
- Consider bringing an electrical adapter for use on an airplane or automobile.
- If you carry an ac power adapter, detach the ac cord from it to avoid damaging the cord.

Travel tips on airplanes

If you carry your computer onto an airplane, observe the following tips:

- Be careful about the seat in front of you on airplanes. Angle your computer display so that it does not get caught when the person in front of you leans back.
- When taking off, remember to turn off your computer or put it to hibernation mode.
- If you intend to use your computer or wireless services (such as Internet and Bluetooth), check with the airline for restrictions and availability of services before boarding the airplane. If there are restrictions on the use of computers with wireless features on the airplane, you must abide by those restrictions.

  The Airplane mode is supported on the Windows 10 operating system. In the Airplane mode, all wireless features are disabled.

  To enable the Airplane mode, do the following:

  1. Open the Start menu, and then click **Settings** → **Network & Internet** → **Airplane mode**.
  2. Slide the **Airplane mode** control to turn it on.

Travel accessories

If you are traveling to another country or region, you might want to consider an appropriate ac power adapter for the country or region to which you are traveling.

To purchase travel accessories, go to:

http://www.lenovo.com/accessories

Chapter 3. Enhancing your computer

This chapter provides instructions on how to use hardware devices to expand your computer capabilities.

Finding ThinkPad options

If you want to expand the capabilities of your computer, Lenovo has a number of hardware accessories and upgrades to meet your needs. Options include memory modules, storage devices, network cards, port replicators or docking stations, batteries, power adapters, keyboards, mice, and more.

To shop at Lenovo, go to:

http://www.lenovo.com/essentials

ThinkPad Pen Pro

The ThinkPad Pen Pro (an electronic pen) might be shipped with some computer models. The ThinkPad Pen Pro enables you to input text in a natural manner when you are:

- Taking notes
- Annotating Portable Document Format (PDF) files
- Drawing graphics with applications capable of editing and sketching

When you draw or write with the ThinkPad Pen Pro, keep it perpendicular to the computer display to achieve the best line quality.

Use the ThinkPad Pen Pro instead of your finger in conditions such as the following:

- You need precise and detailed input, such as drawing a picture or using the handwriting mode.
- Too many elements are crowded on the screen, for example, when you are playing games.
- You want to keep your screen free from smudges.
- You have long fingernails and it is difficult for you to type.

Notes:

- The ThinkPad Pen Pro is not waterproof. Do not soak it or dip it in water.
- Do not hang the computer with the tether.
- To purchase the ThinkPad Pen Pro, go to:
  http://www.lenovo.com/accessories

© Copyright Lenovo 2018

Using the ThinkPad Pen Pro

The following illustration shows the ThinkPad Pen Pro.

1 Tip
2 Eraser button
3 Right-click button
4 Pen tether hole

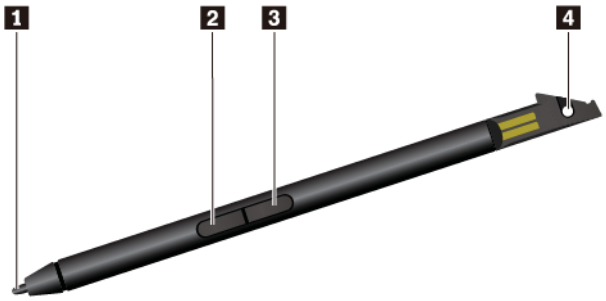

You can perform the following operations with the ThinkPad Pen Pro:

- To click or make a selection, tap the display once with the pen.
- To double-click, tap twice without pausing.
- To right-click, tap the tip 1 on the display and hold the pen there for one second. Alternatively, you can press and hold the right-click button 3 while tapping the tip 1 on the display.
- To erase ink, press and hold the eraser button 2, tap the tip 1 on the display, and drag the pen across the ink you want to erase.

The ThinkPad Pen Pro is stored in the slot on the bottom side of the computer. To remove the pen from the slot, slide the tab of the pen slightly out, and then completely pull out the pen.

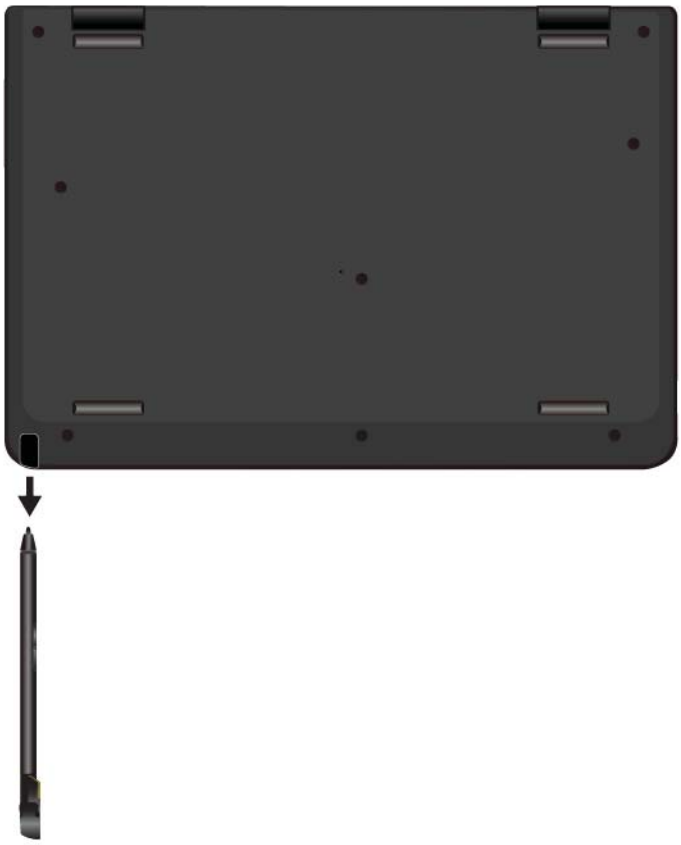

Charging the ThinkPad Pen Pro

To charge the pen, insert the pen slightly into the slot until it snaps into position. The pen will be 80% charged in about 15 seconds and 100% charged in about five minutes.

The following illustration is an example. You can insert the pen into the slot for charging no matter the computer is in the notebook mode, stand mode, tent mode, or tablet mode.

Note: Ensure that your computer is on or in sleep mode. Otherwise, the pen will not be charged.

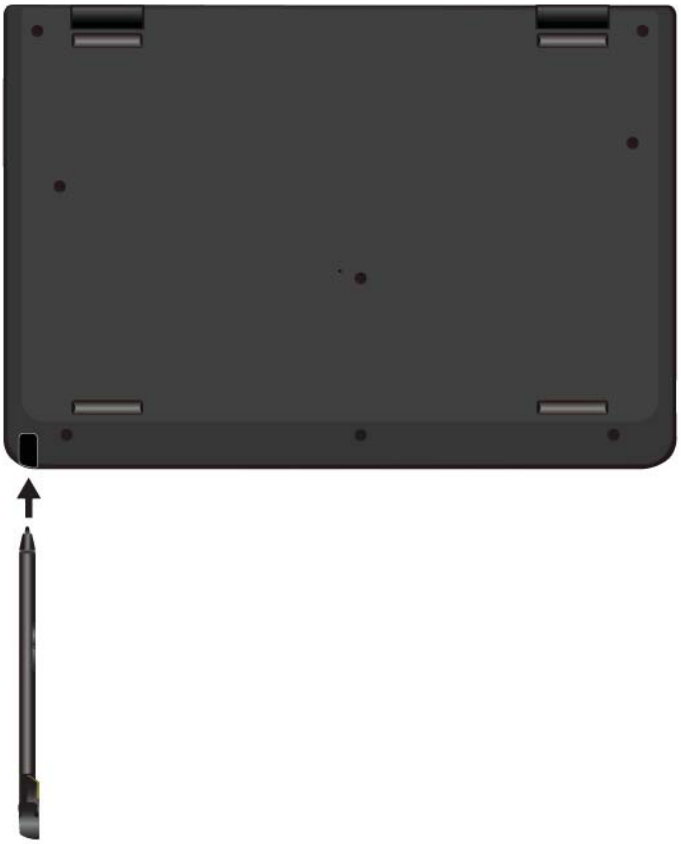

Chapter 4. Accessibility, ergonomic, and maintenance information

This chapter provides information about accessibility, ergonomic, and cleaning and maintenance.

Accessibility information

Lenovo is committed to providing users who have hearing, vision, and mobility limitations with greater access to information and technology. This section provides information about the ways these users can get the most out of their computer experience. You also can get the most up-to-date accessibility information from the following Web site:

https://www.lenovo.com/accessibility

Keyboard shortcuts

The following list contains keyboard shortcuts that can help make your computer easier to use.

Note: Depending on your keyboard, some of the following keyboard shortcuts might not be available.

- **Windows logo key + U**: Open Ease of Access Center
- **Right Shift for eight seconds**: Turn on or turn off Filter Keys
- **Shift five times**: Turn on or turn off Sticky Keys
- **Num Lock for five seconds**: Turn on or turn off Toggle Keys
- **Left Alt+Left Shift+Num Lock**: Turn on or turn off Mouse Keys
- **Left Alt+Left Shift+PrtScn (or PrtSc)**: Turn on or turn off High Contrast

For more information, go to https://windows.microsoft.com/, and then search using any of the following keywords: `keyboard shortcuts`, `key combinations`, `shortcut keys`.

Ease of Access Center

Ease of Access Center on the Windows operating system enables you to configure your computers to suit their physical and cognitive needs.

To access Ease of Access Center, do the following:

1. Go to Control Panel, and ensure that you view Control Panel using Category.
2. Click **Ease of Access → Ease of Access Center**.
3. Choose the appropriate tool by following the instructions on the screen.

Ease of Access Center mainly includes the following tools:

- Magnifier

  Magnifier is a useful utility that enlarges the entire screen or part of the screen so that you can see the items better.
- Narrator

  Narrator is a screen reader that reads what is displayed on the screen aloud and describes events such as error messages.
- On-Screen Keyboard

© Copyright Lenovo 2018

If you prefer to type or enter data into your computer using a mouse, joystick, or other pointing device instead of a physical keyboard, you can use On-Screen Keyboard. On-Screen Keyboard displays a visual keyboard with all the standard keys. You can select keys using the mouse or another pointing device, or you can tap to select the keys if your computer supports multi-touch screen.

- High Contrast

  High Contrast is a feature that heightens the color contrast of some text and images on your screen. As a result, those items are more distinct and easier to identify.

- Personalized keyboard

  Adjust keyboard settings to make your keyboard easier to use. For example, you can use your keyboard to control the pointer and make the keyboard easier to type certain key combinations.

- Personalized mouse

  Adjust mouse settings to make your mouse easier to use. For example, you can change the pointer appearance and make your mouse easier to manage windows.

Speech Recognition

Speech Recognition enables you to control your computer by voice.

Using only your voice, you can start programs, open menus, click objects on the screen, dictate text into documents, and write and send e-mails. Everything you do with the keyboard and mouse can be done with only your voice.

To use Speech Recognition, do the following:

1. Go to Control Panel, and ensure that you view Control Panel by Category.
2. Click **Ease of Access → Speech Recognition**.
3. Follow the instructions on the screen.

Screen-reader technologies

Screen-reader technologies are primarily focused on software program interfaces, help systems, and various online documents. For additional information about screen readers, see the following:

- Using PDFs with screen readers:

  https://www.adobe.com/accessibility.html?promoid=DJGVE

- Using the JAWS screen reader:

  https://www.freedomscientific.com/Products/Blindness/JAWS

- Using the NVDA screen reader:

  https://www.nvaccess.org/

Screen resolution

You can make the text and images on your screen easier to read by adjusting the screen resolution of your computer.

To adjust the screen resolution, do the following:

1. Right-click an empty area of the desktop and then click **Display settings → Display**.
2. Follow the instructions on the screen.

Note: Setting a resolution too low might prevent some items from fitting on the screen.

Customizable item size

You can make the items on your screen easier to read by changing the item size.

- To change the item size temporarily, use the Magnifier tool in Ease of Access Center.
- To change the item size permanently, do the following:
  - Change the size of all the items on your screen.
    1. Right-click an empty area of the desktop and then click **Display settings → Display**.
    2. Change the item size by following the instructions on the screen. For some applications, your configuration might not take effect until you sign out and then sign in again.
  - Change the size of the items on a Web page.

    Press and hold Ctrl, and then press the plus-sign key (+) to enlarge or the minus-sign key (–) to reduce the text size.
  - Change the size of the items on the desktop or a window.

    Note: This function might not work on some windows.

    If your mouse has a wheel, press and hold Ctrl, and then scroll the wheel to change the item size.

Industry-standard connectors

Your computer provides industry-standard connectors that enable you to connect assistive devices.

Documentation in accessible formats

Lenovo provides electronic documentation in accessible formats, such as properly tagged PDF files or HyperText Markup Language (HTML) files. Lenovo electronic documentation is developed to ensure that visually impaired users can read the documentation through a screen reader. Each image in the documentation also includes adequate alternative text so that visually impaired users can understand the image when they use a screen reader.

Ergonomic information

Good ergonomic practice is important to get the most from your personal computer and to avoid discomfort. Arrange your workplace and the equipment you use to suit your individual needs and the kind of work that you perform. In addition, use healthy work habits to maximize your performance and comfort when using your computer.

Working in the virtual office might mean adapting to frequent changes in your environment. Adapting to the surrounding light sources, active seating, and the placement of your computer hardware, can help you improve your performance and achieve greater comfort.

This example shows someone in a conventional setting. Even when not in such a setting, you can follow many of these tips. Develop good habits, and they will serve you well.

General posture: Make minor modifications in your working posture to deter the onset of discomfort caused by long periods of working in the same position. Frequent short breaks from your work also help to prevent minor discomfort associated with your working posture.

Display: Position the display to maintain a comfortable viewing distance of 510 mm to 760 mm (20 inches to 30 inches). Avoid glare or reflections on the display from overhead lighting or outside sources of light. Keep the display screen clean and set the brightness to levels that enable you to see the screen clearly. Press the brightness control keys to adjust display brightness.

Head position: Keep your head and neck in a comfortable and neutral (vertical, or upright) position.

Chair: Use a chair that gives you good back support and seat height adjustment. Use chair adjustments to best suit your comfort posture.

Arm and hand position: If available, use chair arm rests or an area on your working surface to provide weight support for your arms. Keep your forearms, wrists, and hands in a relaxed and neutral (horizontal) position. Type with a soft touch without pounding the keys.

Leg position: Keep your thighs parallel to the floor and your feet flat on the floor or on a footrest.

What if you are traveling?

It might not be possible to observe the best ergonomic practices when you are using your computer while on the move or in a casual setting. Regardless of the setting, try to observe as many of the tips as possible. Sitting properly and using adequate lighting, for example, helps you maintain desirable levels of comfort and performance. If your work area is not in an office setting, ensure to take special note of employing active sitting and taking work breaks. Many ThinkPad product solutions are available to help you modify and expand your computer to best suit your needs. You can find some of these options at http://www.lenovo.com/essentials. Explore your options for docking solutions and external products that provide the adjustability and features that you want.

Questions about vision?

The visual display screens of ThinkPad notebook computers are designed to meet the highest standards. These visual display screens provide you with clear, crisp images and large, bright displays that are easy to see, yet easy on the eyes. Any concentrated and sustained visual activity can be tiring. If you have questions on eye fatigue or visual discomfort, consult a vision-care specialist for advice.

Cleaning and maintenance

With appropriate care and maintenance your computer will serve you reliably. The following topics offer information to help you keep your computer in top working order.

Basic maintenance tips

Here are some basic points about keeping your computer functioning properly:

- Store packing materials safely out of the reach of children to prevent the risk of suffocation from plastic bags.
- Keep your computer away from magnets, activated cellular phones, electrical appliances, or speakers (more than 13 cm or 5 inches).
- Avoid subjecting your computer to extreme temperatures (below 5°C/41°F or above 35°C/95°F).
- Avoid placing any objects (including paper) between the display and the keyboard or the palm rest.
- Do not turn your computer over when the ac power adapter is plugged in, otherwise, it could break the adapter plug.

- Before moving your computer, be sure to remove any media, turn off attached devices, and disconnect cords and cables.
- When picking up your open computer, hold it by the bottom. Do not pick up or hold your computer by the display.
- Only an authorized ThinkPad repair technician should disassemble and repair your computer.
- Do not modify or tape the latches to keep the display open or closed.
- Avoid directly exposing your computer and peripherals to the air from an appliance that can produce negative ions. Wherever possible, ground your computer to facilitate safe electrostatic discharge.

Cleaning your computer

It is a good practice to clean your computer periodically to protect the surfaces and ensure trouble-free operation.

Cleaning the computer cover: Wipe it with a lint-free cloth dampened in mild soap and water. Avoid applying liquids directly to the cover.

Cleaning the keyboard: Wipe the keys one by one with a lint-free cloth dampened in mild soap and water. If you wipe several keys at a time, the cloth might hook onto an adjacent key and possibly damage it. Avoid spraying cleaner directly onto the keyboard. To remove any crumbs or dust from beneath the keys, you can use a camera blower with a brush or use cool air from a hair dryer.

Cleaning the computer screen: Scratches, oil, dust, chemicals, and ultraviolet light can affect the performance of your computer screen. Use a dry, soft lint-free cloth to wipe the screen gently. If you see a scratchlike mark on your screen, it might be a stain. Wipe or dust the stain gently with a soft, dry cloth. If the stain remains, moisten a soft, lint-free cloth with water or eyeglass cleaner, but do not apply liquids directly to your computer screen. Ensure that the computer screen is dry before closing it.

Chapter 5. Security

This chapter provides information about how to protect your computer from unauthorized use.

Using passwords

This topic provides information about how to use the power-on password, supervisor password, and hard disk password.

Passwords introduction

You can help prevent your computer from unauthorized use by using passwords. After you set a password, a prompt is displayed on the screen each time you turn on the computer. Enter your password at the prompt. You cannot use the computer unless you type the correct password.

If you have set a power-on password, a supervisor password, or a hard disk password, it unlocks automatically when the computer resumes from sleep mode.

Note: If a Windows password has been set, you are prompted to enter it when the computer resumes from sleep mode.

Power-on password

You can set a power-on password to help protect your computer against unauthorized access.

If you set a power-on password, the password prompt is displayed on the screen whenever you turn on the computer. You must enter the correct password to start using the computer.

When this icon is displayed, type a power-on password or a supervisor password.

Supervisor password

The supervisor password protects the system information stored in the ThinkPad Setup program. It provides the following security features:

- If only a supervisor password is set, a password prompt is displayed when you try to start the ThinkPad Setup program. Unauthorized users cannot change most of the system configuration options in the ThinkPad Setup program without the password.
- The system administrator can use the supervisor password to access a computer even if the user of that computer has set a power-on password. The supervisor password overrides the power-on password.
- The system administrator can set the same supervisor password on many ThinkPad notebook computers to make administration easier.

Hard disk passwords

Setting a hard disk password prevents unauthorized access to the data on the hard disk drive. When a hard disk password is set, you are prompted to type a valid password each time you try to access the hard disk drive.

The following two types of hard disk passwords can help protect the information stored on the storage drive:

- **User hard disk password**

© Copyright Lenovo 2018

If a user hard disk password has been set, but no master hard disk password has been, the user must enter the user hard disk password to access files and applications on the storage drive.

- **Master hard disk password**

  The master hard disk password also requires a user hard disk password. The master hard disk password is set and used by a system administrator. It enables the administrator to access any storage drive in a system like a master key. The administrator sets the master password; then assign a user password for each computer in the network. The user can then change the user password as desired, but the administrator still can get access by using the master password.

  When a master hard disk password is set, only the administrator can remove the user hard disk password.

When this icon is displayed, type a user hard disk password. To type a master hard disk password, press F1. When the icon changes to , type the master hard disk password. To return to the icon , press F1 again.

Tips on using the hard disk passwords:

- You can set the minimum length of a hard disk password.
- If you set a hard disk password of over seven characters, the storage drive can be used only with a computer that can recognize a hard disk password of over seven characters. If you then install the storage drive in a computer that cannot recognize a hard disk password that contains more than seven characters, you cannot access the drive.
- Record your password and store it in a safe place. If you forget the user hard disk password, or both user and master hard disk passwords, Lenovo cannot reset your passwords or recover data from the storage drive. You must take your computer to a Lenovo reseller or a marketing representative to have the storage drive replaced. Proof of purchase is required, and a fee will be charged for parts and service.

Notes: The eDrive storage drives or Trusted Computing Group (TCG) Opal-compliant storage drives provide self-encryption capabilities to secure your data.

- If a TCG Opal-compliant storage drive and a TCG Opal management software program are installed, and the TCG Opal management software program is activated, the hard disk password is not available.
- If an eDrive storage drive is installed in your computer, and your computer is preinstalled with the Windows 10 operating system, the hard disk password is not available.

Setting, changing, or removing a password

Before you start, print these instructions.

To set, change, or remove a password, do the following:

1. Restart the computer. When the logo screen is displayed, press F1 to start the ThinkPad Setup program.
2. Select **Security → Password** by using the directional keys.
3. Depending on the password type, select **Power-on Password**, **Supervisor Password**, or **Hard disk x Password**.
4. Follow the instructions on the screen to set, change, or remove a password.

You might want to record your password and store it in a safe place. Otherwise, if you forget the password, you have to take your computer to a Lenovo reseller or a marketing representative to have the password canceled.

Hard disk security

To protect the computer from unauthorized security attacks, refer to the following tips to enhance security:

- Set a power-on password as well as a hard disk password. For security, a longer password is recommended.
- The hard disk drive built into your computer can be protected by UEFI BIOS. To provide reliable security, use the security chip and a security program with the Trusted Platform Module (TPM) management feature. See “Setting the security chip” on page 47.
- If a Disk Encryption storage drive is installed in your computer, ensure to protect the contents of your computer from unauthorized access by use of drive encryption software, such as Microsoft Windows BitLocker® Drive Encryption.
- Before you dispose of, sell, or hand over your computer, delete the data stored on it. For more information, see “Deleting data from your storage drive” on page 48.

Using Windows BitLocker Drive Encryption

To help protect your computer against unauthorized access, use the drive encryption software, such as Windows BitLocker Drive Encryption.

Windows BitLocker Drive Encryption (referred to as BitLocker) is an integral security feature of some editions of the Windows operating system. It can help you protect the operating system and data stored on your computer, even if your computer is lost or stolen. BitLocker can encrypt all user and system files, including the swap and hibernation files.

BitLocker uses the TPM to provide enhanced protection for your data and to ensure early boot component integrity. A compatible TPM is defined as a V2.0 TPM.

To check the BitLocker status, go to Control Panel, view Control Panel by Category, and click **System and Security → BitLocker Drive Encryption**.

For more information, see the help system of the Windows operating system, or search for “Microsoft Windows BitLocker Drive Encryption Step-by-Step Guide” on the Microsoft Web site.

Disk Encryption hard disk drive and Encryption solid-state drive

Some models contain the Disk Encryption hard disk drive, Encryption solid-state drive, or Encryption hybrid drive. This encryption technology helps to protect your computer against security attacks on media, NAND flash, or device controllers by use of a hardware encryption chip. For the efficient use of the encryption feature, set a hard disk password for the internal storage drive.

Setting the security chip

Strict security requirements are imposed on network client computers that transfer confidential information electronically. Depending on the options you ordered, your computer might have an embedded security chip (a cryptographic microprocessor). With the security chip, you can do the following:

- Protect your data and system
- Strengthen access controls
- Secure communications

Before you start, print these instructions.

To set an item on the **Security Chip** submenu, do the following:

1. Restart the computer. When the logo screen is displayed, press F1 to start the ThinkPad Setup program.
2. Select **Security → Security Chip** by using the directional keys.
3. Press Enter. The **Security Chip** submenu opens.
4. Move to an item you want to set by using the directional keys. When the item is highlighted, press Enter.
5. Set other items that you want to set.
6. Press F10. A Setup Confirmation window is displayed. Select **Yes** to save the configuration changes and exit.

Notes:

- Ensure that the supervisor password has been set in ThinkPad Setup. Otherwise anyone can change the settings for the security chip.
- When you clear the security chip, turn off your computer and then turn it on again after you set the security chip to **Active**. Otherwise, the **Clear Security Chip** option is not displayed.

Deleting data from your storage drive

Some of the data stored on the storage drive might be sensitive. Handing your computer over to someone else without deleting the installed software, such as operating systems and programs, might even violate the license agreements. Be sure to delete data stored on the storage drive before you dispose of, sell, or hand over your computer.

You can use the following methods to delete data from the storage drive:

- Move the data to the Recycle Bin, and then empty the Recycle Bin.
- Format your storage drive, using the software to initialize it.
- Use the recovery program provided by Lenovo to bring the storage drive back to the factory default settings.

These operations, however, only change the file location of the data; they do not delete the data itself. The data is still there, even though it seems to be lost. Thus, it is sometimes possible to read the data by use of special software for data recovery. There is a risk that people of bad faith might read and misuse the critical data on storage drives for unexpected purposes.

To prevent leakage of data, it is important that you delete all the data from the hard disk drive when you dispose of, sell, or hand over your computer. You can destroy the data physically by smashing the hard disk drive with a hammer, or magnetically by means of strong magnetic power, thus making the data unreadable. But it is recommended that you use the software (payware) or service (pay service) developed for that purpose. The process might take several hours.

For disposing of data on the solid-state drive, Lenovo provides the Drive Erase Utility for Resetting the Cryptographic Key and Erasing the Solid State Drive tool.

Some computers might support a Disk Encryption hard disk drive or Encryption solid-state drive and have such a drive installed. You can logically dispose of all the data on the drive in a short time by erasing the cryptographic key. The data encrypted with the old key is not physically erased but remains on the drive; however, it cannot be decrypted without the old key. This feature is also available with the Drive Erase Utility for Resetting the Cryptographic Key and Erasing the Solid State Drive tool.

Using firewalls

If your system is preinstalled with a firewall program, it protects against computer Internet security threats, unauthorized access, intrusions, and Internet attacks. It also protects your privacy.

For more information about how to use the firewall program, see the help system that comes with the program.

Protecting data against viruses

Lenovo provides a full version of antivirus software on your computer with a free 30-day subscription. After 30 days, you must renew the license to continue receiving the antivirus software updates.

For more information about your antivirus software, see the help system of your antivirus software.

Chapter 6. Advanced configuration

This chapter provides information to help you further configure the computer:

Installing the Windows 10 operating system

In some situations, you might need to install a new operating system. This topic provides instructions on how to install a Windows 10 operating system.

Before you start, print these instructions.

Attention: The process of installing a new operating system deletes all the data on your internal storage drive, including the data that were stored in a hidden folder.

To install the Windows 10 operating system, do the following:

1. Ensure that you set the security chip to TPM 2.0. For more information, see “Setting the security chip” on page 47.
2. Connect the drive that contains the operating system installation program to the computer.
3. Start the ThinkPad Setup program. See “Using the ThinkPad Setup program” on page 52.
4. Select **Startup → Boot** to display the **Boot Priority Order** submenu.
5. Select the drive that contains the operating system installation program, for example, **USB HDD**. Then press Esc.
6. Select **Restart** and ensure that **OS Optimized Defaults** is enabled. Then press F10 to save the settings and exit the ThinkPad Setup program.
7. Follow the on-screen instructions to install the device drivers and necessary programs. See “Installing device drivers” on page 52.
8. After installing the device drivers, apply Windows Update to get the latest modules, for example the security patches.
9. Depending on your preference, install Lenovo programs. For information about Lenovo programs, see “Lenovo programs” on page 13.

Note: After installing the operating system, do not change the initial **UEFI/Legacy Boot** setting in the ThinkPad Setup program. Otherwise, the operating system will not start correctly.

When you install the Windows 10 operating system, you might need one of the following country or region codes:

Country or region	Code	Country or region	Code
China	SC	Netherlands	NL
Denmark	DK	Norway	NO
Finland	FI	Spain	SP
France	FR	Sweden	SV
Germany	GR	Taiwan and Hong Kong	TC
Italy	IT	United States	US
Japan	JP		

© Copyright Lenovo 2018

Installing device drivers

Device drivers are programs that contain instructions for the operating system about how to operate or “drive” a certain piece of hardware. Each hardware component on your computer has its own specific driver. If you add a component, the operating system must be instructed on how to operate that piece of hardware. After you install the driver, the operating system can recognize the hardware component and understand how to use it.

Note: Because drivers are programs, like any other file on your computer, they are susceptible to corruption and might not perform properly if corruption occurs.

It is not always necessary to download the latest drivers. However, you should download the latest driver for a component when you notice poor performance from that component or when you added a component. This action might eliminate the driver as the potential cause of a problem.

Getting the latest drivers from the Web site

You can download and install updated device drivers from the Lenovo Support Web site by doing the following:

1. Go to http://www.lenovo.com/support.
2. Select the entry for your computer and then follow the instructions on the screen to download and install necessary software.

Getting the latest drivers using Lenovo Companion

The system update function of Lenovo Companion helps you keep the software on your computer up-to-date. Update packages are stored on Lenovo servers and can be downloaded from the Lenovo Support Web site. Update packages can contain applications, device drivers, UEFI BIOS flashes, or software updates. When Lenovo Companion connects to the Lenovo Support Web site, the program automatically recognizes the following information and determines what updates are available for your computer:

- Machine type and model of your computer
- Installed operating system
- Language of the operating system

Lenovo Companion then displays a list of update packages and categorizes each update as critical, recommended, or optional to help you understand the importance. You have complete control of which updates to download and install. After you select the update packages you want, Lenovo Companion automatically downloads and installs the updates.

Lenovo Companion is preinstalled on your computer and is ready to run. The only prerequisite is an active Internet connection. You can start the program manually, or you can use the schedule feature to enable the program to search for updates automatically at specified intervals. You also can predefine scheduled updates to search by the critical severity level so the list you choose from contains only those update types that you need.

For more information about how to use Lenovo Companion, see the help system of the program.

Using the ThinkPad Setup program

The ThinkPad Setup program enables you to select the preferred settings for your computer through configuring the BIOS.

Configuring ThinkPad Setup

The ThinkPad Setup program menu lists various items about system configuration.

Attention: The default configurations are already optimized for you. Improper change of the configurations might cause unexpected results.

To configure ThinkPad Setup, do the following:

1. Restart the computer. When the logo screen is displayed, press F1. The ThinkPad Setup program starts.

   Note: If you are required to enter the supervisor password, enter the correct password. You also can press Enter to skip the password prompt and start the ThinkPad Setup program. If you do not enter the password, you cannot change the configurations that are protected by the supervisor password.
2. Use the arrow keys to select a tab; or use the arrow keys to locate an item and press Enter to select it. Then the supported submenu is displayed.
3. Default values are in **boldface**. Set the value of an item by doing one of the following:
   - Press F6 to change to a higher value.
   - Press F5 to change to a lower value.
4. Press the Esc key to exit the submenu and return to the parent menu. Then use the same method mentioned above to change other configurations.
5. When you complete the configuration, press F10 to save and exit. You also can select the **Restart** tab in the ThinkPad Setup menu, and restart your computer with one of the provided options.

You can press F9 to restore to the default settings.

Changing the startup sequence

In some cases, you might have to change the startup sequence so that the computer starts from a desired device when powered on. Read this topic to learn how to change the computer startup sequence.

Attention:

- After you change the startup sequence, ensure that you select the correct device during a copy, a save, or a format operation. If you select the wrong device, the data on that device might be erased or overwritten.
- If you are using the Windows BitLocker Drive Encryption feature and your computer has a Trusted Platform Module, do not change the startup sequence. BitLocker Drive Encryption locks the computer when it detects the change of startup sequence.

To change the startup sequence, do the following:

1. Access the ThinkPad Setup program and select **Startup** → **Boot**. Then press Enter. The default device order list is displayed.
2. Set the startup sequence as you desired.
3. Press F10 to save the changes and restart the system.

You also can change the startup sequence temporarily by doing the following:

1. Turn off the computer.
2. Turn on the computer. When the logo screen is displayed, press the F12 key.
3. Select the device that you want the computer to start from. Then press Enter.

   Note: The **Boot** menu will be displayed if the computer cannot start from any devices or the operating system cannot be found.

Updating the UEFI BIOS

The UEFI BIOS is the first program that the computer runs when the computer is turned on. The UEFI BIOS initializes the hardware components, and loads the operating system and other programs.

When you install a new program, device driver, or hardware component, you might be informed to update the UEFI BIOS. You can update the UEFI BIOS by starting your computer from a flash update disc or a flash update program running in the Windows environment.

The requirements for flash update are as follows:

- The computer must be started over LAN.
- The computer must be engaged in the Preboot eXecution Environment (PXE).
- A network-management program must be installed on the computer of the network administrator.

For instructions on how to update the UEFI BIOS, go to http://www.lenovo.com/support.

BIOS menu

This topic introduces the following BIOS menus of your computer:

- Main menu
- Config menu
- Date/Time menu
- Security menu
- Startup menu
- Restart menu

Note: Depending on the model and operating system, the menu items and the default value might change without notice.

Main menu

When you enter the ThinkPad Setup program, you first see the **Main** menu as follows:

Note: The BIOS menu items might change without notice. Depending on the model, the default value might vary.

- **UEFI BIOS Version**
- **UEFI BIOS Date (Year-Month-Date)**
- **Embedded Controller Version**
- **TXE Firmware Version**
- **Machine Type Model**
- **System-unit serial number**
- **System board serial number**
- **Asset Tag**
- **CPU Type**
- **CPU Speed**
- **Installed Memory**
- **UUID**
- **MAC Address (Internal LAN)**

- **Preinstalled OS license**
- **UEFI Secure Boot**
- **OA3 ID**
- **OA2**

Config menu

Note: The BIOS menu items might change without notice. Depending on the model, the default value might vary.

Network

- **Wake On LAN**

  Values: Disabled, **AC only**, AC and Battery

  Description: The network administrator can turn on a computer from a management console by using the Wake on LAN feature. If you select **AC Only**, the Wake on LAN feature is enabled only when the ac power adapter is attached. If you select **AC and Battery**, the Wake on LAN feature is enabled with any power sources.

  Notes:

  – The magic packet type Wake on LAN requires that the ac power is attached.

  – The Wake on LAN feature does not work when the hard disk password is set.

- **Ethernet LAN Option ROM**

  Values: Disabled, **Enabled**

  Description: The Ethernet LAN Option ROM enables the startup from an integrated network device. This menu is displayed only in **Legacy Only** boot mode or **Both** boot mode with **Legacy first**.

- **UEFI IPv4 Network Stack**

  Values: Disabled, **Enabled**

  Description: Enable or disable Internet Protocol Version 4 (IPv4) network stack for UEFI environment. This menu is displayed only in **UEFI Only** boot mode or **Both** boot mode with **UEFI first**.

- **UEFI IPv6 Network Stack**

  Values: Disabled, **Enabled**

  Description: Enable or disable Internet Protocol Version 6 (IPv6) network stack for UEFI environment. This menu is displayed only in **UEFI Only** boot mode or **Both** boot mode with **UEFI first**.

- **UEFI PXE Boot Priority**

  Values: IPv6 First, **IPv4 First**

  Description: Select network stack priority for UEFI PXE boot. This menu is displayed only in **UEFI Only** boot mode or **Both** boot mode with **UEFI first**, when IPv6 and IPv4 stacks are both enabled.

USB

- **USB UEFI BIOS Support**

  Values: Disabled, **Enabled**

  Description: Enable or disable the boot support for USB storage devices.

- **Always On USB**

  Values: Disabled, **Enabled**

  Description: Select **Enabled** to charge devices through the Always On USB connectors even when the computer is turned off, in sleep mode, or in hibernation mode.

Note: USB-wake-up function is not supported on Always On USB connectors.

– **Charge in Battery Mode**

  Values: **Disabled**, Enabled

  Description: This option is supported only when **Always On USB** is enabled. Select **Enabled** to charge devices through the Always On USB connector even when the computer is in hibernation mode, or powered off and in battery operation.

Keyboard/Mouse

- **Fn and Ctrl Key swap**

  Values: **Disabled**, Enabled

  Description: If you select **Enabled**, the Fn key works as the Ctrl key and the Ctrl key works as the Fn key.

- **F1–F12 as primary function**

  Values: **Disabled**, Enabled

  Description: If you select **Enabled**, pressing the function keys directly inputs F1–F12. If you select **Disabled**, pressing the function keys directly initiates the special function printed as an icon on each key. To temporarily switch the above two functions, press Fn+Esc.

- **Fn Sticky key**

  Values: **Disabled**, Enabled

  Description: This feature enables you to use Fn key combinations by pressing one key instead of pressing multiple keys at a time. If you select **Enabled**, after you press the Fn key, it remains active until you press another key. For example, you can press and release the Fn key, and then press a function key to achieve the combination function. In this way, you do not have to press the Fn key and function key simultaneously.

  After you press the Fn key twice, it remains active until you press it again. When the Fn key remains active, directly pressing a function key has the same function as pressing the Fn key and the function key simultaneously.

Display

- **Boot Display Device**

  Values: **ThinkPad LCD**, HDMI

  Description: Select the display device that you want to activate at boot time. This selection is effective for boot time, password prompt, and ThinkPad Setup. You can attach an external display to the HDMI connector on your computer.

- **Boot Time Extension**

  Values: **Disabled**, 1 second, 2 seconds, 3 seconds, 5 seconds, 10 seconds,

  Description: During the boot process, the computer might not detect the external monitors that need more time to get ready. Select how long you want to extend the boot process.

Power

- **Intel SpeedStep® technology**

  Values: Disabled, **Enabled**

  Description: Select the mode of Intel SpeedStep technology at runtime.

- **Adaptive Thermal Management**

  Values: **Maximize Performance**, Balanced

  Description: Select a thermal management scheme to use. The scheme affects fan sound, temperature, and performance.

- **CPU Power Management**

  Values: Disabled, **Enabled**

  Description: Enable or disable the power-saving feature that stops the microprocessor clock automatically when there are no system activities. Normally, it is not necessary to change the setting.
- **Smart Health Charge**

  Values: Disabled, **Enabled**

  Description: If you select **Enabled**, the computer enters a slow charge mode in the set time. The Smart Health Charge mode helps extend the battery operating life.
- **Disable Built-in Battery**

  Values: No, Yes

  Description: Temporarily disable the built-in battery for servicing the computer. After selecting this item, the computer will be automatically powered off.

  Note: The battery will be automatically re-enabled when the ac power adapter is reconnected to the computer.

Beep and Alarm

- **Password Beep**

  Values: **Disabled**, Enabled

  Description: Enable or disable a beep when the computer is waiting for a power-on, hard disk, or supervisor password. Different beeps remind you that the password you entered is right or wrong.
- **Keyboard Beep**

  Values: **Enabled**, Disabled

  Description: Enable or disable a beep when unmanageable key combinations are pressed.

Date/Time menu

Note: The BIOS menu items might change without notice. Depending on the model, the default value might vary.

- **System Date**

  Descriptions: Set or change the date of the system.
- **System Time**

  Descriptions: Set or change the time of the system.

Security menu

Note: The BIOS menu items might change without notice. Depending on the model, the default value might vary.

Password

- **Supervisor Password**

  Values: **Disabled**, Enabled

  Descriptions: Set a supervisor password to prevent unauthorized users from changing the startup sequence, network related settings, and system date and time. For more information, see “Passwords introduction” on page 45.
- **Lock UEFI BIOS Settings**

  Values: **Disabled**, Enabled

Descriptions: Enable this option to prevent unauthorized users from changing any settings in ThinkPad Setup. To use this function, a supervisor password is required.

- **Password at Unattended Boot**

  Values: Disabled, **Enabled**

  Descriptions: When this option is enabled, a password prompt is displayed when the computer is turned on by an unattended event such as a Wake on LAN attempt. To prevent unauthorized access, set the user authentication on the operating system.

- **Password at Restart**

  Values: **Disabled**, Enabled

  Descriptions: When this option is enabled, a password prompt is displayed when you restart the computer. To prevent unauthorized access, set the user authentication on the operating system.

- **Password at Boot Device List**

  Values: **Disabled**, Enabled

  Descriptions: If you enable this option, the supervisor password is required when you try to enter the **Boot** menu by repeatedly pressing F12. To use this function, a supervisor password must be set.

- **Password Count Exceeded Error**

  Values: Disabled, **Enabled**

  Descriptions: Enable this option to display the POST 0199 error message when you enter a wrong supervisor password more than three times.

- **Set Minimum Length**

  Values: **Disabled**, x characters (4 ≤ x ≤ 12)

  Descriptions: Specify a minimum length for power-on passwords and hard disk passwords. If a supervisor password is set, you cannot change the minimum length until you log in as a supervisor.

- **Power-On Password**

  Values: **Disabled**, Enabled

  Descriptions: Set a power-on password to protect the computer from unauthorized access. For more information, see “Passwords introduction” on page 45.

- **Hard Disk 1 Password**

  Values: **Disabled**, Enabled

  Descriptions: Set a hard disk password to prevent unauthorized users from accessing data on the internal storage drive. For more information, see “Passwords introduction” on page 45.

Security Chip

- **Security Chip Type**

  Values: **TPM 2.0**

- **Security Chip**

  Values: Disabled, **Enabled**

  Descriptions: Enable or disable the security chip.

- **Security Reporting Options**

  – SMBOS Reporting

    Values: Disabled, **Enabled**

    Descriptions: Enable or disable the feature that reports the SMBOS data. This option is displayed only if **Security Chip** is **Enabled**. When the **Security Reporting Options** is **Enabled**, any changes of the UEFI

BIOS data will be recorded to PCR1 that is defined by the TCG standard. The authorized programs can monitor, read, and analyze the record.

- **Clear Security Chip**

  Descriptions: Use this option to clear the encryption key.

- **Physical Presence for Clear**

  Values: Disabled, **Enabled**

  Descriptions: If this option is enabled, a confirmation message is displayed when you clear the security chip.

UEFI BIOS Update Option

- **Flash BIOS Updating by End-Users**

  Values: Disabled, **Enabled**

  Descriptions: When this option is enabled, all users can update the UEFI BIOS. If you disable this option, only the person who knows the supervisor password can update the UEFI BIOS.

- **Secure RollBack Prevention**

  Values: Disabled, Enabled

  Descriptions: When this option is disabled, you can flash the UEFI BIOS to earlier version.

  Note: This item is set as **Disabled** by default when the **OS Optimized Defaults** on the Restart menu is set as **Disabled**. This item is set as **Enabled** by default when the **OS Optimized Defaults** is set as **Enabled**.

- **Windows UEFI Firmware Update**

  Values: Disabled, **Enabled**

  Descriptions: Enable or disable the Windows UEFI Firmware Update feature. If you select Disabled, BIOS will skip Windows UEFI Firmware Update and you can flash the UEFI BIOS to an earlier version.

Memory Protection

- **Execution Prevention**

  Values: Disabled, **Enabled**

  Descriptions: Some computer viruses and worms cause memory buffers to overflow. By enabling this option, you can protect your computer against attacks from such viruses and worms. If the option is enabled but you find that a program does not run properly, disable this option first and then reset the settings.

Virtualization

- **Intel Virtualization Technology**

  Values: **Disabled**, Enabled

  Descriptions: If this option is enabled, a Virtual Machine Monitor (VMM) can utilize the additional hardware capabilities provided by Intel Virtualization Technology.

- **Intel VT-d Feature**

  Values: **Disabled**, Enabled

  Descriptions: Intel VT-d stands for Intel Virtualization Technology for Directed I/O. When enabled, a VMM can utilize the platform infrastructure for I/O virtualization.

I/O Port Access

Descriptions: Use this submenu to enable or disable the following hardware features:

- Ethernet LAN
- Wireless LAN
- Bluetooth
- USB Port
- Memory card slot
- Integrated camera
- Microphone

Anti-Theft

- **Computrace Module Activation**

  Values: Disabled, **Enabled**, Permanently Disabled

  Descriptions: Enable the UEFI BIOS interface to activate the computrace module. Computrace is an optional monitoring service from Absolute Software. If you select **Permanently Disabled**, you cannot enable this setting again.

Secure Boot

- **Secure Boot**

  Values: Disabled, Enabled

  Descriptions: Enable this option to prevent unauthorized operating systems from loading when you turn on the computer.

  Note: This item is set as **Disabled** by default when the **OS Optimized Defaults** on the Restart menu is set as Disabled. This item is set as Enabled by default when the **OS Optimized Defaults** is set as **Enabled**.
- **Platform Mode**

  Values: Setup Mode, User Mode

  Descriptions: Specify the system operating mode.
- **Secure Boot Mode**

  Values: Standard Mode, Custom Mode

  Descriptions: Specify the **Secure Boot** mode.
- **Reset to Setup Mode**

  Descriptions: Use this option to clear the current platform key and reset **Platform Mode** to **Setup Mode**.
- **Restore Factory Keys**

  Descriptions: Use this option to restore all keys and certificates in **Secure Boot** databases to the factory defaults.
- **Clear All Secure Boot Keys**

  Descriptions: Use this option to clear all keys and certificates in **Secure Boot** databases and install your own keys and certificates.

Internal Device Access

- **Internal Storage Tamper Detection**

  Values: **Disabled**, Enabled

  Descriptions: When this option is enabled, removing any internal storage device when your computer is in sleep mode will be detected. If you remove the internal storage device while the computer is in sleep mode, the computer will shut down when you wake it up, and any unsaved data will be lost.

Device Guard

- **Device Guard**

  Values: **Disabled**, Enabled

  Descriptions: This option is used to support Microsoft Device Guard.

  When this option is enabled, Intel Virtualization Technology, Intel VT-d Feature, Intel TXT feature (available on some models), Secure Boot, and OS Optimized Defaults are automatically enabled. Boot order is not selectable. To complete the configuration of Device Guard, you have to set a supervisor password.

  When this option is disabled, the setup options are configurable and you can choose any boot options to start the computer.

Startup menu

Note: The BIOS menu items might change without notice. Depending on the model, the default value might vary.

- **Boot**

  Descriptions: Define the startup sequence.

- **Network Boot**

  Descriptions: Select the boot device when the system wakes from LAN. If Wake On LAN is enabled, the network administrator can turn on all of the computers in a LAN remotely through network management software.

- **UEFI/Legacy Boot**

  Values: **Both**, UEFI Only, Legacy Only

  Descriptions: Define the system boot capability.

  – **UEFI/Legacy Boot Priority**

    Values: Legacy First, **UEFI First**

    Description: Select the boot priority between UEFI and Legacy.

  – **CSM Support** (for UEFI only)

    Values: Yes, **No**

    Description: Compatibility Support Module (CSM) is required for starting the legacy operating system. If you select **UEFI only**, **CSM Support** is selectable. For **Both** or **Legacy Only** mode, **CSM Support** is not selectable.

- **Boot Mode**

  Values: **Quick**, Diagnostics

  Descriptions: Define which screen is displayed during the POST, the logo screen or the text message screen.

- **Option Key Display**

  Values: Disabled, **Enabled**

  Descriptions: If you disable this option, the “To interrupt normal startup, press Enter.” message will not be displayed during the POST.

- **Boot Device List F12 Option**

  Values: Disabled, **Enabled**

  Descriptions: If you enable this option, you can open the Boot Menu window by continuously pressing F12 when the computer is powered on.

- **Boot Order Lock**

  Values: **Disabled**, Enabled

Descriptions: Enable this option to lock the boot device priority order.

Restart menu

Note: The BIOS menu items might change without notice. Depending on the model, the default value might vary.

- **Exit Saving Changes**

  Descriptions: Save the changes and restart the computer.
- **Exit Discarding Changes**

  Descriptions: Discard the changes and restart the computer.
- **Load Setup Defaults**

  Descriptions: Restore to the factory default settings.

  Note: Enable **OS Optimized Defaults** to meet the Windows 10 certification requirements. When you change this setting, some other settings are changed automatically, such as **CSM Support**, **UEFI/Legacy Boot**, **Secure Boot**, and **Secure RollBack Prevention**.
- **Discard Changes**

  Descriptions: Discard the changes.
- **Save Changes**

  Descriptions: Save the changes.

Using system management

This topic is primarily intended for the network administrators.

Your computer is designed for manageability, so that you can redirect more resources to better meet your business objectives.

This manageability, known as total cost of ownership (TCO), enables you to remotely operate client computers in the same way as you operate your own computer, such as turning on a client computer, formatting a storage drive, and installing a program.

Once the computer is configured and operational, you can manage it by using the software and the manageability features that are already integrated into the client computer and the network.

Desktop Management Interface

The UEFI BIOS of your computer supports an interface called System Management BIOS (SMBIOS) Reference Specification, version 2.8 or later. SMBIOS provides information about the hardware components of your computer. It is the responsibility of the UEFI BIOS to provide information about itself and the devices on the system board. This specification documents the standards for getting access to this BIOS information.

Preboot eXecution Environment

The Preboot eXecution Environment (PXE) technology makes the computer more manageable by enabling the computer to start from a server. Your computer supports the personal computer functions that PXE requires. For example, with the appropriate LAN card, your computer can be started from the PXE server.

Note: The Remote Initial Program Load (RIPL or RPL) function cannot be used with your computer.

Wake on LAN

The network administrator can turn on a computer from a management console by using the Wake on LAN feature.

When the Wake on LAN feature is enabled, many operations, such as data transfer, software updates, and flash updates of the UEFI BIOS, can be done remotely without remote attendance. The updating process can perform after normal working hours and on weekends, so that the users are not interrupted during work, and the LAN traffic is kept to a minimum. It saves time and increases productivity.

If the computer is turned on through Wake on LAN, the computer starts follow the **Network Boot** sequence.

Asset ID EEPROM

The Asset ID EEPROM contains information about the computer configuration and the serial numbers of the key components. It also includes a number of blank fields where you can record information about the end users in your network.

To enable a network administrator to remotely control your computer, set the following system-management features in the ThinkPad Setup program:

- Wake on LAN
- Network Boot sequence

Note: If a supervisor password has been set, you are required to enter the supervisor password when you start the ThinkPad Setup program.

Enabling or disabling the Wake on LAN feature

When the Wake on LAN feature is enabled and the computer is connected to a LAN, the network administrator can start the computer remotely from a management console, using a remote network-management program.

To enable or disable the Wake on LAN feature, do the following:

1. Restart the computer. When the logo screen is displayed, press F1 to start the ThinkPad Setup program.
2. Select **Config** → **Network**. The **Network** submenu is displayed.
3. Select a corresponding option for the Wake on LAN feature.
4. Press F10 to save the settings and exit.

Defining a Network Boot sequence

When the computer wakes on LAN, the computer boots from the device as specified on the **Network Boot** menu, and then follow the boot order list on the **Boot** menu.

To define a Network Boot sequence, do the following:

1. Restart the computer. When the logo screen is displayed, press F1 to start the ThinkPad Setup program.
2. Select **Startup** → **Network Boot**. The boot device list is displayed.
3. Select a boot device to make it as the top boot priority.
4. Press F10 to save the settings and exit.

You can press F9 to restore to the factory default settings.

Chapter 7. Troubleshooting computer problems

This chapter provides information about what to do if you experience a problem with your computer.

General tips for preventing problems

This topic provides the following tips to help you prevent computing problems:

- Empty your recycle bin on a regular basis.
- Use a disk defragment tool regularly on your storage drive to improve data seek and read times.
- To free up disk space, uninstall unused programs. You also might want to look for program duplication or overlapping versions.
- Clean out your Inbox, Sent, and Trash folders from your e-mail client program.
- Back up your data at least once a week. If critical data is present, it is a good idea to back up the data daily. Lenovo has many backup options available for your computer.
- Schedule system restore operations to take a system snapshot periodically. For information about system restore, see Chapter 8 “Recovery information” on page 81.
- Go to http://www.lenovo.com/support to download and install updates for the device drivers and UEFI BIOS when needed.
- Keep up to date for device drivers on other non-Lenovo hardware. Before updating device drivers, read the device driver information release notes for compatibility or known issues.
- Keep a log book. Entries might include major hardware or software changes, driver updates, minor issues you have experienced, and how you resolved the minor issues.
- If you ever need to run a recovery on your computer to return the preinstalled contents onto the machine, the following tips might help along the way:
  1. Remove all external devices such as the printer and keyboard.
  2. Ensure that your battery is charged and your computer has the ac power connected.
  3. Access ThinkPad Setup and load the default settings.
  4. Restart the computer and start the recovery operation.
  5. If your computer uses discs as the recovery media, do not remove the disc from the drive until prompted to do so.

Diagnosing problems with Lenovo Companion

Many computer problems can be solved without outside assistance. If you experience a problem with your computer, the first place to start is the troubleshooting information in your computer documentation. If you suspect a software problem, see the documentation, including readme files and help information systems, that come with the operating system or program.

ThinkPad notebook computers come with a set of diagnostic programs that you can use to help you identify hardware problems. Lenovo Companion is preinstalled on your computer and also is available for download at:

https://shop.lenovo.com/us/en/accessories/software/apps/lenovo-apps/companion/

Note: If you are unable to isolate and repair the problem yourself after running Lenovo Companion, save and print the log files created by the program. You need the log files when you speak to a Lenovo technical support representative.

© Copyright Lenovo 2018

Lenovo Companion supports the hardware scan function. It combines diagnostic tests, system information collection, security status, and support information, along with hints and tips for optimal system performance. To run Lenovo Companion, see “Accessing Lenovo programs” on page 13.

The troubleshooting information or the diagnostic programs might tell you that you need additional or updated device drivers or other software. You can get the latest technical information and download device drivers and updates from the Lenovo Support Web site at:

http://www.lenovo.com/support

For additional information, see the help system of the program.

Troubleshooting

If your computer has an error, it typically displays a message or an error code, or makes a beep when you turn it on. When you experience a problem, see the corresponding symptom and solution in this topic to try to solve the problem by yourself.

Computer stops responding

Print these instructions now and keep them with your computer for reference later.

Problem: My computer is unresponsive (I cannot use the ThinkPad pointing device or the keyboard).

Solution: Do the following:

1. Remove all sources of power from the computer and reset the system by inserting a straightened paper clip into the emergency-reset hole.
2. Reattach the ac power adapter and restart the computer. If the computer does not turn back on, continue with step 3.
3. While the computer is turned off, remove all sources of power from the computer and remove all external devices that are attached to your computer (keyboard, mouse, printer, scanner, and so on). Reattach the ac power adapter and restart the computer.

If the computer still does not start up, call the Customer Support Center and a Customer Support Specialist will assist you.

Spills on the keyboard

Problem: I spill something on the computer.

Solution: Because most liquids conduct electricity, liquid spilled on the keyboard could create numerous short circuits and damage your computer. To solve the problem, do the following:

1. Ensure that no liquid creates a short circuit between you and the ac power adapter (if in use).
2. Carefully unplug the ac power adapter immediately.
3. Turn off the computer immediately. The more quickly you stop the current from passing through the computer the more likely you will reduce damage from short circuits.

   Attention: Although you might lose some data or work by turning off the computer immediately, leaving the computer on might make your computer unusable.
4. Wait until you are certain that all the liquid is dry before turning on your computer.

Error messages

- **Message**: 0177: Bad SVP data, stop POST task.

  Solution: Checksum of the supervisor password in the EEPROM is not correct. The system board should be replaced. Have the computer serviced.
- **Message**: 0183: Bad CRC of Security Settings in EFI Variable. Enter ThinkPad Setup.

  Solution: Checksum of the Security settings in the EFI Variable is not correct. Enter ThinkPad Setup to check security settings, press F10, and then press Enter to restart the system. If you still have a problem, have the computer serviced.
- **Message**: 0187: EAIA data access error

  Solution: The access to EEPROM is failed. Have the computer serviced.
- **Message**: 0188: Invalid RFID Serialization Information Area

  Solution: The EEPROM checksum is not correct (block # 0 and 1). The system board should be replaced, and the box serial number must be reinstalled. Have the computer serviced.
- **Message**: 0189: Invalid RFID configuration information area

  Solution: The EEPROM checksum is not correct (block # 4 and 5). The system board should be replaced, and the universally unique identifier (UUID) must be reinstalled. Have the computer serviced.
- **Message**: 0190: Critical low-battery error

  Solution: The computer turned off because the battery power is low. Connect the ac power adapter to the computer and charge the batteries.
- **Message**: 0191: System Security - Invalid remote change requested

  Solution: The system configuration change has failed. Confirm the operation and try again. To clear the error, enter ThinkPad Setup.
- **Message**: 0199: System Security - Security password retry count exceeded.

  Solution: This message is displayed if you enter a wrong supervisor password more than three times. Confirm the supervisor password and try again. To clear the error, enter ThinkPad Setup.
- **Message**: 0270: Real Time Clock Error.

  Solution: System Real Time Clock is not functional. Have the computer serviced.
- **Message**: 0271: Check Date and Time settings.

  Solution: The date or the time is not set in the computer. Enter ThinkPad Setup and set the date and time.
- **Message**: 1802: Unauthorized network card is plugged in - Power off and remove the network card.

  Solution: The wireless network card is not supported on this computer. Remove it.
- **Message**: 1820: More than one external fingerprint readers are attached.

  Solution: Turn off and remove all but the reader that you set up within your main operating system.
- **Message**: 2100: Detection error on HDD0 (Main HDD)

  Solution: The hard disk drive is not working. Have the hard disk drive serviced.
- **Message**: 2101: Detection error on SSD1 (M.2)

  Solution: The M.2 solid-state drive is not working. Have the M.2 solid-state drive serviced.
- **Message**: 2102: Detection error on SSD2 (M.2)

  Solution: The M.2 solid-state drive is not working. Have the M.2 solid-state drive serviced.
- **Message**: 2110: Read error on HDD0 (Main HDD)

  Solution: The hard disk drive is not working. Have the hard disk drive serviced.
- **Message**: 2111: Read error on SSD1 (M.2)

  Solution: The M.2 solid-state drive is not working. Have the M.2 solid-state drive serviced.

- **Message**: 2112: Read error on SSD2 (M.2)

  Solution: The M.2 solid-state drive is not working. Have the M.2 solid-state drive serviced.
- **Message**: 2200: Machine Type and Serial Number are invalid.

  Solution: Machine Type and Serial Number are invalid. Have the computer serviced.
- **Message**: 2201: Machine UUID is invalid.

  Solution: Machine UUID is invalid. Have the computer serviced.
- **Message**: Fan error

  Solution: Cooling fan has failed. Shut down the computer immediately and have the computer serviced.
- **Message**: Thermal sensing error

  Solution: The thermal sensor has a problem. Shut down the computer immediately and have the computer serviced.
- **Message**: Bottom Cover Tamper Detection Error

  Solution: The Bottom Cover Tamper Switch is not working. Have the computer serviced.
- **Message**: Error: The non-volatile system UEFI variable storage is nearly full.

  Note: This error indicates that the operating system or programs cannot create, modify, or delete data in the non-volatile system UEFI variable storage due to insufficient storage space after POST.

  The non-volatile system UEFI variable storage is used by the UEFI BIOS and by the operating system or programs. This error occurs when the operating system or programs store large amounts of data in the variable storage. All data needed for POST, such as BIOS setup settings, chipset, or platform configuration data, are stored in a separate UEFI variable storage.

  Solution: Press F1 after the error message is displayed to enter ThinkPad Setup. A dialog asks the user for confirmation to clean up the storage. If the user selects “Yes”, all data that were created by the operating system or programs will be deleted except global variables defined by the Unified Extensible Firmware Interface Specification. If the user selects “No”, all data will be kept, but the operating system or programs will not be able to create, modify, or delete data in the storage.

  If this error happens at a service center, Lenovo authorized service personnel will clean up the non-volatile system UEFI variable storage using the preceding solution.

Beep errors

Lenovo SmartBeep technology enables you to decode beep errors with your smartphone when a black screen occurs with beeps from your computer. To decode the beep error with Lenovo SmartBeep technology, do the following:

1. Go to https://support.lenovo.com/smartbeep or scan the following QR Code.

2. Download the proper diagnostic app and install it on your smartphone.
3. Run the diagnostic app and place the smartphone near the computer.

4. Press the Fn key on your computer to emit the beep again. The diagnostic app decodes the beep error and shows possible solutions on the smartphone.

The following section describes some beep errors and the corresponding solutions.

Note: Do not attempt to service a product yourself unless instructed to do so by the Customer Support Center or product documentation. Only use a Lenovo-authorized service provider to repair your product.

Error codes	Solutions
0001: Reset error (platform reset not de-asserted)	1. Remove all power resources (the ac power adapter, removable battery, and coin-cell battery). If your computer has a built-in battery, reset the computer by inserting a straightened paper clip into the emergency-reset hole. Wait for one minute. Then reconnect all power resources. 2. Replace the system board (service provider only).
0002: Internal bus error	Replace the system board (service provider only).
0281: General embedded controller error	Replace the system board (service provider only).
0282: Memory module error	1. Reinstall or replace the memory module. 2. Replace the system board (service provider only).
0283: PCI resource error	1. Remove PCIe devices (the M.2 card, PCIe card, and so on) (service provider only). 2. Replace the system board (service provider only).
0284: TCG-compliant functionality-related error (might be the BIOS code validation failure)	Replace the system board (service provider only).
0285: TCG-compliant functionality-related error (might be the TPM initialization failure)	Replace the system board (service provider only).
0286: Integrated graphics error	Replace the system board (service provider only).
0287: Discrete graphics error	1. Reinstall or replace the discrete graphics card (service provider only). 2. Replace the system board (service provider only).
0288: Computer display error	1. Reconnect the display cable on both the system board side and the computer display side (service provider only). 2. Replace the system board (service provider only).

Memory module problems

Print these instructions now and keep them with your computer for reference later.

Problem: My memory module is not operating properly.

Solution: Check the following items:

1. Check for error messages during startup.

   Follow the appropriate corrective actions for power-on self-test (POST) error messages.

2. Verify that the latest UEFI BIOS for your model has been installed.
3. Verify the proper memory configuration and compatibility including the maximum memory size and the memory speed.
4. Run diagnostic programs. See “Diagnosing problems with Lenovo Companion” on page 65.

Ethernet problems

- **Problem**: My computer cannot connect to the network.

  Solution:

  Ensure that:

  – The cable is installed correctly.

    The network cable must be securely connected both to the Ethernet connector of your computer and to the RJ45 connector of the hub. The maximum allowable distance from the computer to hub is 100 m (328 ft). If the cable is connected and the distance is within the acceptable limits but the problem persists, try a different cable.

  – You are using the correct device driver. To install the correct driver, do the following:

    1. Go to Control Panel, and ensure that you view Control Panel by Category.
    2. Click **Hardware and Sound** → **Device Manager**. If you are prompted for an administrator password or confirmation, type the password or provide confirmation.
    3. Double-click **Network adapters** to view all network adapters. If an exclamation mark **!** is displayed next to the adapter name, you might not be using the correct driver or the driver might have been disabled.
    4. Right-click the highlighted adapter, click **Update driver**, and then follow the instructions on the screen to update the driver.

  – The switch port and the adapter have the same duplex setting.

    If you configured the adapter for full duplex, ensure that the switch port also is configured for full duplex. Setting a wrong duplex mode can degrade performance, cause data loss, or result in lost connections.

  – You have installed all networking software that is necessary for your network environment.

    Check with your LAN administrator for the necessary networking software.

- **Problem**: The adapter stops working for no apparent reason.

  Solution: The network driver files might be corrupt or missing.

- **Problem**: My computer is a Gigabit Ethernet model and I use a speed of 1000 Mbps, the connection fails or errors occur.

  Solution:

  – Use Category 5 wiring and ensure that the network cable is securely connected.

  – Connect to a 1000 BASE-T hub/switch (not 1000 BASE-X).

- **Problem**: The Wake on LAN feature is not working.

  Solution: Ensure that Wake on LAN is enabled in ThinkPad Setup. If it is, check with your LAN administrator for the necessary settings.

- **Problem**: My computer is a Gigabit Ethernet model, but it cannot connect to the network at 1000 Mbps. Instead, it connects at 100 Mbps.

  Solution:

  – Try another Ethernet cable.

  – Ensure that the link partner is set to auto-negotiate.

– Ensure that the switch is 802.3ab-compliant (gigabit over copper).

Wireless-LAN problem

Problem: I cannot connect to the network using the built-in wireless network card.

Solution: Ensure that:

- The Airplane mode is off.
- Your wireless-LAN driver is the latest version.
- Your computer is within the range of a wireless access point.
- The wireless radio is enabled.

Bluetooth problem

Note: Check your connection anytime and ensure that no other Bluetooth-enabled device is searching for the device to which you want to connect. Simultaneous searching is not allowed in the Bluetooth connection.

Problem: Sound does not come from the Bluetooth headset/headphones but comes from the local speaker even though the Bluetooth headset/headphones is connected using a Headset profile or AV profile.

Solution: Do the following:

1. Exit the program that uses the sound device (for example, Windows Media Player).
2. Go to Control Panel, and ensure that you view Control Panel by Category.
3. Click **Hardware and Sound** → **Sound** → **Playback**.
4. If you are using a Headset profile, select **Bluetooth Hands-free Audio** and click **Set Default**. If you are using an AV profile, select **Stereo Audio** and click **Set Default**.
5. Click **OK** to close the Sound window.

Keyboard problems

- **Problem**: All or some keys on the keyboard do not work.

  Solution: If an external numeric keypad is connected:

  1. Turn off the computer.
  2. Remove the external numeric keypad.
  3. Turn on the computer and try using the keyboard again.

  If the keyboard problem is resolved, carefully reconnect the external numeric keypad.

  If the problem persists, ensure that the correct device driver is installed by doing the following:

  1. Go to Control Panel, and then change the view of Control Panel from Category to Large icons or Small icons.
  2. Click **Keyboard**.
  3. Click the **Hardware** tab. In the **Device Properties** section, ensure that you see this message: `Device Status: This device is working properly.`

  If keys on the keyboard still do not work, have the computer serviced.
- **Problem**: All or some keys on the external numeric keypad do not work.

  Solution: Ensure that the external numeric keypad is correctly connected to the computer.
- **Problem**: The keys on the top row of the numeric keypad might not function the same as the icon printed on each key.

Solution: Do the following:

1. Go to Control Panel, and then change the view of Control Panel from Category to Large icons or Small icons.
2. Click **Keyboard**. In the Keyboard Properties window, click the **Fn and function keys** tab.

   Note: If the **Fn and function keys** tab is not displayed, connect your computer to the Internet. Then download and install the ThinkPad Hotkey Features program from the Lenovo Support Web site. For more information, see “Installing device drivers” on page 52.
3. In the **How to use Fn key combinations** section, select your preferred option.
4. If you select **Fn sticky method**, press Fn to reset the Fn sticky status.
5. Try to press keys on the top row of the numeric keypad again to check if the problem is resolved.

Computer screen problems

- **Problem**: My screen keeps blanking when I do not want it to.

  Solution: Do the following:

  1. Go to Control Panel, and ensure that you view Control Panel by Category.
  2. Click **Hardware and Sound → Power Options**.
  3. Show the additional plans, and then select **High performance**.
- **Problem**: When I turn on the computer, nothing is displayed on the screen and the computer does not beep while starting up.

  Note: If you are not sure whether you heard any beeps, turn off the computer by pressing and holding the power button for four seconds or more. Then turn on the computer and listen again.

  Solution: Ensure that:

  – The ac power adapter is connected to the computer and the power cord is plugged into a working electrical outlet.

  – The computer is turned on. (Press the power button again for confirmation.)

  – The brightness level of the screen is appropriately set.

  If a power-on password is set, press any key to display the prompt for the power-on password and then type the correct password and press Enter.

  If these items are correctly set, and the screen remains blank, have the computer serviced.
- **Problem**: When I turn on the computer, only a white cursor is displayed on a blank screen.

  Solution: If you have modified a partition on your hard disk drive by using partition software, information about that partition, or the master boot record might have been destroyed.

  Do the following to try to solve the problem:

  1. Turn off the computer, and then turn it on again.
  2. If you still see only the cursor on the screen, do the following:

     – If you have used partition software, examine the partition on the hard disk drive by using the software, and recover the partition if required.

     – Use the recovery solutions to restore the system to the factory default state. For more information, see Chapter 8 “Recovery information” on page 81.

     If the problem persists, have the computer serviced.
- **Problem**: The screen goes blank while the computer is on.

  Solution: Your screen saver or power management might have been enabled. Do one of the following:

– Touch the touch pad, or press a key to exit the screen saver.
– Press the power button to resume the computer from sleep or hibernation mode.

- **Problem**: The screen is blank.

  Solution: Do the following:

  1. Press the display-mode switching key to bring up the image.
  2. If you are using the ac power adapter, or using the battery and the battery gauge shows that the battery is not depleted, press the brightness-up key to make the screen brighter.
  3. If your computer is in sleep mode, press Fn to resume the computer from sleep mode.
  4. If the problem persists, follow the solution for the following problem.

- **Problem**: The screen is unreadable or distorted.

  Solution: Ensure that:

  – The display device driver is installed correctly.
  – The screen resolution and color quality are correctly set.
  – The monitor type is correct.

  To check these settings, do the following:

  1. Right-click on the desktop, and then click **Display settings** → **Display**.

     Note: If your computer cannot detect the external monitor, click **Detect** in the Display window.
  2. Select the external monitor and set **Resolution**.
  3. Click **Display adapter properties**.
  4. Click the **Monitor** tab. Check the monitor information to make sure that the monitor type is correct. If it is, click **OK** to close the window; otherwise proceed with the following steps.
  5. If more than two monitor types are displayed, select **Generic PnP Monitor** or **Generic Non-PnP Monitor**.
  6. Click **Properties**. If you are prompted for an administrator password or confirmation, type the password or provide confirmation.
  7. Click the **Driver** tab.
  8. Click **Update Driver**.
  9. Click **Browse my computer for driver software**, and then click **Let me pick from a list of available drivers on my computer**.
  10. Clear the **Show compatible hardware** check box.
  11. Select the correct manufacturer and model for the external monitor. If you cannot find your monitor on the list, stop the installation of this driver and use the driver shipped with your monitor.
  12. After updating the driver, click **Close**.

- **Problem**: Incorrect characters are displayed on the screen.

  Solution: Ensure that you install the operating system and program correctly. If the problem persists, have the computer serviced.

- **Problem**: I try to turn off my computer but the screen stays on and I cannot completely turn off my computer.

  Solution: Press and hold the power button for four seconds or more to turn off the computer.

- **Problem**: Missing, discolored, or bright dots appear on the screen every time I turn on my computer.

Solution: This is an intrinsic characteristic of the TFT technology. Your computer display contains multiple thin-film transistors (TFTs). Only a very small number of missing, discolored, or bright dots on the screen might exist all the time.

External monitor problems

- **Problem**: The external monitor is blank.

  Solution: To bring up the image, press the display-mode switching key and select the monitor you want. If the problem persists, do the following:

  1. Connect the external monitor to another computer to ensure that it works.
  2. Reconnect the external monitor to your computer.
  3. See the manual shipped with the external monitor to check the resolutions and refresh rates that are supported.
     - If the external monitor supports the same resolution as the computer display or a higher resolution, view output on the external monitor or on both the external monitor and the computer display.
     - If the external monitor supports a lower resolution than the computer display, view output on the external monitor only. (If you view output on both the computer display and the external monitor, the external monitor screen will be blank or distorted.)

- **Problem**: I cannot set a higher resolution than the present one on my external monitor.

  Solution: Ensure that the monitor information is correct. If necessary, update the monitor driver.

- **Problem**: The screen is unreadable or distorted.

  Solution: Ensure that:

  - The monitor information is correct and the appropriate monitor type is selected. If necessary, update the monitor driver.
  - Ensure that an appropriate refresh rate is selected by doing the following:
    1. Connect the external monitor to the monitor connector, and then connect the monitor to an electrical outlet.
    2. Turn on the external monitor and the computer.
    3. Right-click on the desktop, and then click **Display settings** → **Display**.

       Note: If your computer cannot detect the external monitor, click **Detect** in the Display window.
    4. Click the icon for the appropriate monitor (**Monitor-2** icon is for the external monitor).
    5. Click **Display adapter properties**.
    6. Click the **Monitor** tab.
    7. Select the correct screen refresh rate.

- **Problem**: Wrong characters are displayed on the screen.

  Solution: Ensure that you follow the correct procedure when installing the operating system and program. If they are installed and configured correctly, but the problem still persists, have the external monitor serviced.

- **Problem**: The Extend desktop function does not work.

  Solution: Enable the Extend desktop function. See “Using an external display” on page 32.

- **Problem**: I am using the Extend desktop function, but I cannot set a higher resolution or higher refresh rate on the secondary display.

  Solution: Change the resolution and the color depth to lower settings for the primary display. See “Using an external display” on page 32.

- **Problem**: Display switching does not work.

  Solution: If you use the Extend desktop function, disable it, and change the display output location. If a DVD movie or a video clip is playing, stop the playback, close the program, and then change the display output location.

- **Problem**: The screen position on the external monitor is incorrect when that monitor is set for a high resolution.

  Solution: Sometimes, when you use a high resolution such as 1600 x 1200 pixels, the image is shifted to the left or right on the screen. To correct this, first ensure that your external monitor supports the display mode (the resolution and the refresh rate) that you have set. If it does not, set a display mode that the monitor supports. If it does support the display mode you have set, go to the setup menu for the monitor itself and adjust the settings there. Usually the external monitor has buttons for access to the setup menu. For more information, see the documentation that comes with the monitor.

Audio problems

- **Problem**: Wave or MIDI sound does not play properly.

  Solution: Ensure that the built-in audio device is configured correctly.

  1. Go to Control Panel, and ensure that you view Control Panel by Category.
  2. Click **Hardware and Sound**.
  3. Click **Device Manager**. If you are prompted for an administrator password or confirmation, type the password or provide confirmation.
  4. Double-click **Sound, video and game controllers**.
  5. Ensure that the device following **Sound, video and game controllers** is enabled and configured correctly.

- **Problem**: Recordings made by using the microphone input are not loud enough.

  Solution: Ensure that the Microphone Boost function is turned on and set by doing the following:

  1. Go to Control Panel, and ensure that you view Control Panel by Category.
  2. Click **Hardware and Sound**.
  3. Click **Sound**.
  4. Click the **Recording** tab in the Sound window.
  5. Select **Internal Microphone**, and click **Properties**.
  6. Click the **Levels** tab, and move the Microphone Boost slider upwards.
  7. Click **OK**.

  Note: For more information about controlling volume, see your Windows online help.

- **Problem**: I cannot move the volume slider or balance slider.

  Solution: The slider might be grayed out. This means that its position is fixed by the hardware and cannot be changed.

- **Problem**: The volume sliders do not stay in place when some audio programs are used.

  Solution: It is normal for the sliders to change position when certain sound programs are used. The programs are aware of the settings in the Volume Mixer window and are enabled to change the settings themselves. An example is the Windows Media Player program. Usually the program has sliders available to control the sound from within the program.

- **Problem**: The balance slider cannot completely mute one channel.

  Solution: The control is designed to compensate for minor differences in balance and does not completely mute either channel.

- **Problem**: There is no volume control for MIDI sound in the Volume Mixer window.

  Solution: Use the hardware volume control. This is because the built-in synthesizer software does not support the control.
- **Problem**: The sound cannot be turned off even if I set the Master volume control at minimum.

  Solution: You still can hear some sound even though you have set the Master volume control at minimum. To turn off the sound completely, go to the Master volume control and select **Mute Speaker/HP**.
- **Problem**: When I connect headphones to my computer while playing sound, a speaker does not produce sound.

  Solution: When the headphones are attached, the streaming is automatically redirected to it. If you want to listen to sound from the speakers again, ensure that you set those speakers as the default device. For more information, see the help information system for Realtek HD Audio Manager.
- **Problem**: Sound does not come from a headphone or a speaker, or the computer cannot record sounds.

  Solution: To switch from one device to another (for example, from a speaker to a headphone, or from an external microphone to a built-in microphone), do the following:

  1. Go to Control Panel, and ensure that you view Control Panel by Category.
  2. Click **Hardware and Sound**.
  3. Click the **Sound** icon. The Sound window is displayed.
  4. Click the **Playback** tab. Select the desired device (for example, speakers) and then click **Set Default**. The speakers are set to the default device with a check mark displayed beside the speaker icon.
  5. Play any sound through a music program (for example, Windows Media Player). Ensure that sound comes from the speakers now.
  6. Then, if you would like to switch to a headset, close the music program.
  7. Click the **Playback** tab. Select **Headset Earphone** and then click **Set Default**. The headset is set to the default device with a check mark displayed beside the headset icon.
  8. Play any sound through a music program. Ensure that sound comes from the headset attached directly to the computer.

Battery problems

- **Problem**: The battery cannot be fully charged in the standard charge time when the computer is powered off.

  Solution: The battery might be over-discharged. Do the following:

  1. Turn off the computer.
  2. Ensure that the over-discharged battery is in the computer.
  3. Connect the ac power adapter to the computer and let it charge.

  If a quick charger is available, use it to charge the over-discharged battery.

  If the battery cannot be fully charged in 24 hours, use a new battery.
- **Problem**: The computer shuts down before the battery status icon shows that the battery is empty.

  Solution: Discharge and recharge the battery.
- **Problem**: The computer operates after the battery status icon shows that the battery is empty.

  Solution: Discharge and recharge the battery.
- **Problem**: The operating time for a fully charged battery is short.

  Solution: Discharge and recharge the battery. If your battery operating time is still short, use a new battery.
- **Problem**: The computer does not operate with a fully charged battery.

Solution: The surge protector in the battery might be active. Turn off the computer for one minute to reset the protector; then turn on the computer again.

- **Problem**: The battery cannot get charged.

  Solution: You cannot charge the battery when it is too hot. Turn off the computer and wait for a while to let it cool to room temperature. After it cools, recharge the battery. If it still cannot be charged, have it serviced.

ac power adapter problem

Problem: The ac power adapter is connected to the computer and the working electrical outlet, but the power adapter (power plug) icon is not displayed in the Windows notification area. The ac power indicator also does not light up.

Solution: Do the following:

1. Ensure that the connection of the ac power adapter is correct. For instructions on how to connect the ac power adapter, see “Using the ac power adapter” on page 26.
2. If the connection of the ac power adapter is correct, turn off the computer, and then disconnect the ac power adapter.
3. Reconnect the ac power adapter, and then turn on the computer.
4. If the power adapter icon still is not displayed in the Windows notification area, have the ac power adapter and your computer serviced.

Power problems

Print these instructions now and keep them with your computer for reference later.

- **Problem**: My computer is getting no power at all.

  Solution: Check the following items:

  1. Verify the power button. The power button is illuminated whenever the computer is on.
  2. Check all power connections. Remove any power strips and surge protectors to connect the ac power adapter directly to the ac power outlet.
  3. Inspect the ac power adapter. Check for any physical damage, and ensure that the power cable is firmly attached to the adapter brick and the computer.
  4. Verify that the ac power source is working by attaching another device to the outlet.
- **Problem**: My computer does not run on battery power.

  Solution: Check the following items:

  1. If the battery runs out of power, attach the ac power adapter to recharge the battery.
  2. If the battery is charged but the computer does not run, call the Customer Support Center and a Customer Support Specialist will assist you.
- **Problem**: The system does not respond, and I cannot turn off the computer.

  Solution: Turn off the computer by pressing and holding the power button for four seconds or more.

Power button problem

Problem: The system does not respond, and I cannot turn off the computer.

Solution: Turn off the computer by pressing and holding the power button for four seconds or more. If the system still does not respond, remove the ac power adapter and reset the system by inserting one end of a

needle or a straightened paper clip into the emergency-reset hole. To locate the emergency-reset hole, see “Bottom view” on page 6.

Boot problems

Print these instructions now and keep them with your computer for reference later.

- **Problem**: I receive an error message before the operating system loads.

  Solution: Follow the appropriate corrective actions for power-on self-test (POST) error messages.
- **Problem**: I receive an error message while the operating system is loading the desktop configuration after the POST is completed.

  Solution: Find solutions by searching for the error message at the following Web sites:

  – http://www.lenovo.com/support

  – https://support.microsoft.com/

Sleep and hibernation problems

- **Problem**: The computer enters sleep mode unexpectedly.

  Solution: If the microprocessor overheats, the computer automatically enters sleep mode to allow the computer to cool and to protect the microprocessor and other internal components. Check the settings for sleep mode.
- **Problem**: The computer enters sleep mode immediately after the power-on self-test.

  Solution: Ensure that:

  – The battery is charged.

  – The operating temperature is within the acceptable range. See “Operating environment” on page 12.

  If the problem persists, have the computer serviced.
- **Problem**: A critical low-battery error occurs, and the computer immediately turns off.

  Solution: The battery power is getting low. Plug the ac power adapter into an electrical outlet and then into the computer.
- **Problem**: The computer display remains blank after you press Fn to resume from sleep mode.

  Solution: Check whether an external monitor was disconnected or turned off while the computer was in sleep mode. If you disconnected or turned off the external monitor, connect it or turn it on before resuming the computer from sleep mode. When resuming the computer from sleep mode without attaching the external monitor or turning it on, and the computer display remains blank, press the display-mode switching key to bring up the computer display.
- **Problem**: The computer does not resume from sleep mode, or the system status indicator blinks slowly and the computer does not work.

  Solution: If the system does not resume from sleep mode, it might have entered sleep or hibernation mode automatically because the battery is depleted. Check the system status indicator.

  – If the system status indicator blinks slowly, your computer is in sleep mode. Connect the ac power adapter to the computer; then press Fn.

  – If the system status indicator is off, your computer has no power or is in hibernation mode. Connect the ac power adapter to the computer; then press the power button to resume operation.

  If the system still does not resume from sleep mode, your system might stop responding and you might not be able to turn off the computer. In this case, you must reset the computer. If you have not saved your data, it might be lost. To reset the computer, press and hold the power button for four seconds or more.

- **Problem**: Your computer does not enter sleep or hibernation mode.

  Solution: Check whether any option has been selected to disable your computer from entering sleep or hibernation mode.

  If your computer tries to enter sleep mode but the request is rejected, the device attached to the USB connector might have been disabled. If this occurs, do a hot-unplug-and-plug operation for the USB device.
- **Problem**: The battery discharges slightly while the computer is in hibernation mode.

  Solution: If the wakeup function is enabled, the computer consumes a small amount of power. This is not a defect. For more information, see “Power-saving modes” on page 28.

Solid-state drive problem

Problem: When you compress files or folders by use of the data compression function in the Windows operating system, and then decompress them, the process of writing to or reading from the files or folders is slow.

Solution: Apply the disk defragmentation tool in the Windows operating system for faster access to the data.

ThinkPad Pen Pro problem

Problem: The ThinkPad Pen Pro does not perform well.

Solution: The battery power for the pen might be low. Ensure that your computer is on. Then insert the pen into the pen slot to charge the pen for about five minutes.

Software problem

Problem: A program does not run properly.

Solution: Ensure that the problem is not being caused by the program.

Check that your computer has the minimum required memory to run the program. See the manuals supplied with the program.

Check the following:

- The program is designed to operate with your operating system.
- Other programs run properly on your computer.
- The necessary device drivers are installed.
- The program works when it is run on some other computer.

If an error message is displayed while you are using the program, see the manuals or help system supplied with the program.

If the program still does not run properly, contact your place of purchase or a service representative for help.

USB problem

Problem: A device connected to the USB connector does not work.

Solution: Ensure that the USB port is enabled in the ThinkPad Setup. Open the Device Manager window. Ensure that the USB device setup is correct, and that the assignment of computer resource and the installation of the device driver are correct. To open the Device Manager window, go to Control Panel and

ensure that you view Control Panel by Category, and click **Hardware and Sound → Device Manager**. If you are prompted for an administrator password or confirmation, type the password or provide confirmation.

Refer to “Diagnosing problems with Lenovo Companion” on page 65 and run a diagnostic test of the USB connector.

Chapter 8. Recovery information

This chapter provides information about the Windows recovery solutions on the Windows 10 operating system.

Resetting your computer

If your computer does not perform well, you might consider resetting your computer. In the resetting process, you can choose to keep your files or remove them, and then reinstall the Windows operating system.

To reset your computer, do the following:

Note: The items in the graphical user interface (GUI) might change without notice.

1. Open the Start menu, and then click **Settings → Update & Security → Recovery**.
2. In the **Reset this PC** section, click **Get started**.
3. Follow the instructions on the screen to reset your computer.

Using advanced startup options

The advanced startup options enable you to do the following:

- Change the firmware settings of the computer
- Change the startup settings of the Windows operating system
- Start the computer from an external device
- Restore the Windows operating system from a system image

To use advanced startup options, do the following:

Note: The items in the graphical user interface (GUI) might change without notice.

1. Open the Start menu, and then click **Settings → Update & security → Recovery**.
2. In the **Advanced startup** section, click **Restart now → Troubleshoot → Advanced options**.
3. Select a startup option you want, and then follow the instructions on the screen.

Recovering your operating system if Windows 10 fails to start

The Windows recovery environment on your computer operates independently from the Windows 10 operating system. It enables you to recover or repair the operating system even if the Windows 10 operating system fails to start.

After two consecutive failed boot attempts, the Windows recovery environment starts automatically. Then you can choose repair and recovery options by following the on-screen instructions.

Note: Ensure that your computer is connected to ac power during the recovery process.

© Copyright Lenovo 2018

Creating and using a recovery USB drive

You can create a recovery USB drive as a backup for the Windows recovery programs. With the recovery USB drive, you can troubleshoot and fix the problems even if the preinstalled Windows recovery programs are damaged.

It is recommended that you create a recovery USB drive as early as possible. If you did not create a recovery USB drive as a precautionary measure, you can contact Lenovo Customer Support Center and purchase one from Lenovo. For a list of the Lenovo Support phone numbers for your country or region, go to:

http://www.lenovo.com/support/phone

Creating a recovery USB drive

To create a recovery USB drive, you need a USB drive with at least 16 GB of storage capacity. The actual USB capacity that is required depends on the size of the recovery image.

Attention: The creation process will delete anything stored on the USB drive. To avoid data loss, make a backup copy of all the data that you want to keep.

To create a recovery USB drive, do the following:

Note: Ensure that your computer is connected to ac power during the following process.

1. Connect a proper USB drive (at least 16 GB of storage) to the computer.
2. Type `recovery` in the search box on the taskbar. Then click **Create a recovery drive**.
3. Click **Yes** in the User Account Control window to allow the Recovery Media Creator program to start.
4. In the Recovery Drive window, follow the instructions on the screen to create a recovery USB drive.

Using the recovery USB drive

If you cannot start your computer, refer to the corresponding information in the topic “Troubleshooting” on page 66 to try to solve the problem by yourself. If you still cannot start your computer, use the recovery USB drive to recover your computer.

To use a recovery USB drive, do the following:

Note: Ensure that your computer is connected to ac power during the following process.

1. Connect the recovery USB drive to the computer.
2. Turn on or restart the computer. Before the Windows operating system starts, repeatedly press F12. The Boot Menu window opens.
3. Select the recovery USB drive as the boot device.
4. Select a preferred keyboard layout.
5. Click **Troubleshoot** to display optional recovery solutions.
6. Select a corresponding recovery solution according to your situation. Then follow the instructions on the screen to complete the process.

Chapter 9. Replacing devices

This chapter provides instructions on how to install or replace hardware for your computer.

Customer Replaceable Units

Customer Replaceable Units (CRUs) are parts that can be upgraded or replaced by the customer. ThinkPad computers contain the following types of CRUs:

- **Self-service CRUs:** Refer to parts that can be installed or replaced easily by customer themselves or by trained service technicians at an additional cost.
- **Optional-service CRUs:** Refer to parts that can be installed or replaced by customers with a greater skill level. Trained service technicians can also provide service to install or replace the parts under the type of warranty designated for the customer's machine.

If you intend on installing the CRU, Lenovo will ship the CRU to you. CRU information and replacement instructions are shipped with your product and are available from Lenovo at any time upon request. You might be required to return the defective part that is replaced by the CRU. When return is required: (1) return instructions, a prepaid shipping label, and a container will be included with the replacement CRU; and (2) you might be charged for the replacement CRU if Lenovo does not receive the defective CRU within thirty (30) days of your receipt of the replacement CRU. See your Lenovo Limited Warranty documentation at http://www.lenovo.com/warranty/llw_02 for full details.

For the CRU information of your computer, refer to the following list.

Self-service CRUs

- ac power adapter and power cord
- Base cover assembly
- M.2 solid-state drive
- Power button card
- ThinkPad Pen Pro (available on some models)
- ThinkPad Pen Pro charger (available on some models)
- Wireless LAN card

Optional-service CRUs

- Keyboard

Static electricity prevention

Static electricity, although harmless to you, can seriously damage computer components and options. Improper handling of static-sensitive parts can cause damage to the part. When you unpack an option or a Customer Replaceable Unit (CRU), do not open the static-protective package until the instructions direct you to install the part.

When you handle options or CRUs, or perform any work inside the computer, take the following precautions to avoid static-electricity damage:

- Limit your movement. Movement can cause static electricity to build up around you.

© Copyright Lenovo 2018

- Always handle components carefully. Handle adapters, memory modules, and other circuit boards by the edges. Never touch exposed circuitry.
- Prevent others from touching the components.
- Before you install a static-sensitive option or CRU, do either of the following to reduce static electricity in the package and your body:
  - Touch the static-protective package that contains the part to a metal expansion-slot cover for at least two seconds.
  - Touch the static-protective package that contains the part to other unpainted metal surface on the computer for at least two seconds.
- When possible, remove the static-sensitive part from the static-protective package and install the part without setting it down. When this is not possible, place the static-protective package on a smooth, level surface and place the part on the package.
- Do not place the part on the computer cover or other metal surface.

Disabling the built-in battery

Before replacing any CRU, ensure that you disable Fast Startup first and then disable the built-in battery.

To disable Fast Startup, do the following:

1. Go to Control Panel, and then change the view of Control Panel from Category to Large icons or Small icons.
2. Click **Power Options**, and then click **Choose what the power buttons do** on the left pane.
3. Click **Change settings that are currently unavailable** at the top.
4. If prompted by User Account Control (UAC), click **Yes**.
5. Clear the **Turn on fast startup** check box, and then click **Save changes**.

To disable the built-in battery, do the following:

1. Restart your computer. When the logo screen is displayed, immediately press F1 to enter ThinkPad Setup.
2. Select **Config → Power**. The **Power** submenu is displayed.
3. Select **Disable built-in battery** and press Enter.
4. Select **Yes** in the Setup Confirmation window. The built-in battery is disabled and the computer turns off automatically. Wait three to five minutes to let the computer cool.

Replacing the microSD card

Before you start, read “Important safety information” on page v and print the following instructions.

Your computer has a microSD card reader that supports the following types of cards:

Note: Your computer does not support the content protection for recordable media (CPRM) feature for the SD card.

- MultiMediaCard (MMC)
- Secure Digital (SD) card
- Secure Digital High-Capacity (SDHC) card
- Secure Digital eXtended-Capacity (SDXC) card

Attention: During the data transfer, do not put your computer to sleep or hibernation mode before the data transfer is completed; otherwise, your data could get damaged.

To replace a microSD card, do the following:

1. Locate the microSD card slot at the left side of the computer.
2. Push the microSD card inward a little bit until you hear a click 1. Then, release it. The microSD card ejects. Gently slide the card out of the card slot 2.

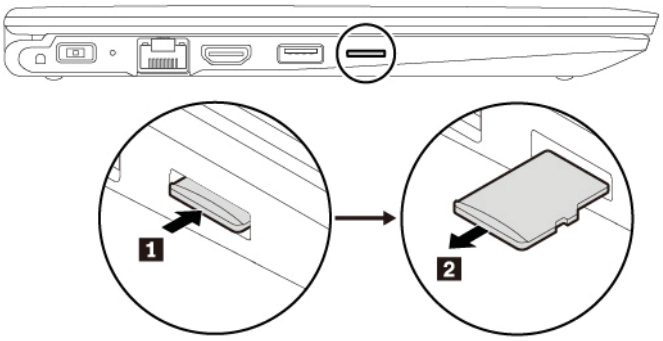

3. Insert the new card into the microSD card slot. The card might stop before it is installed into the card reader. Ensure that you insert the card firmly until you hear a click.

   Note: Ensure that the metal contacts of the card are facing down and pointing toward the computer.

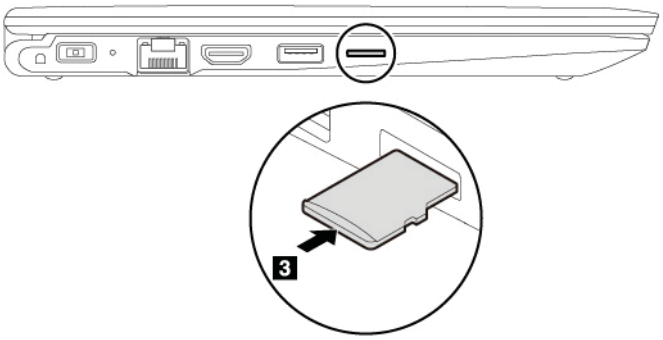

Replacing the base cover assembly

Before you start, read “Important safety information” on page v and print the following instructions.

To replace the base cover assembly, do the following:

1. Disable the built-in battery. See “Disabling the built-in battery” on page 84.
2. Ensure that the computer is turned off and disconnected from ac power and all cables.
3. Close the computer display and turn the computer over.

4. Loosen the screws that secure the base cover assembly. Pry up the latches as illustrated. Then remove the base cover assembly.

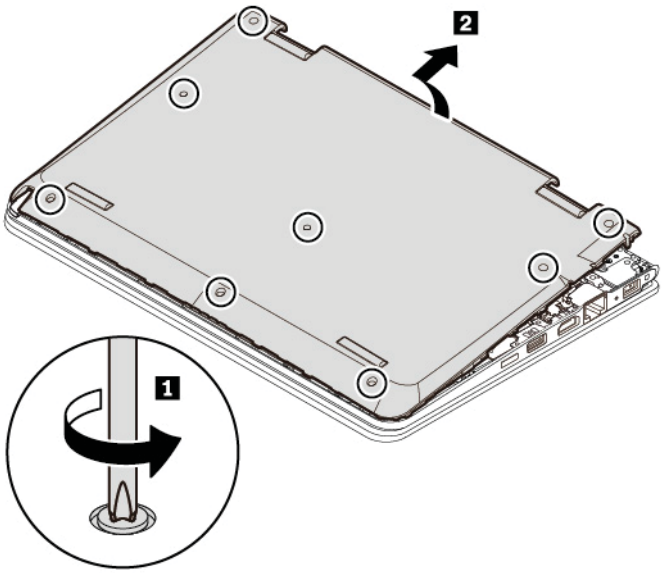

5. Install the new base cover assembly in place. Tighten the screws to secure the base cover assembly.

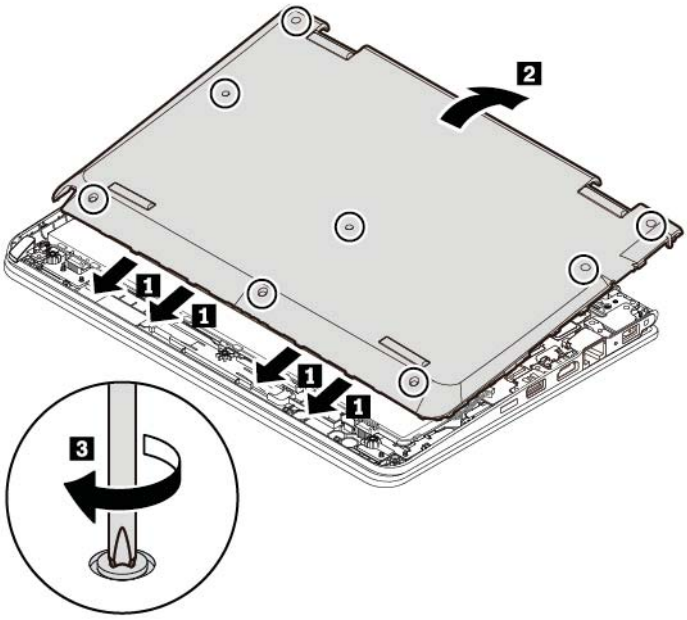

6. Turn the computer over. Connect the ac power adapter and all cables to the computer.

Replacing the M.2 solid-state drive

Before you start, read “Important safety information” on page v and print the following instructions.

Attention: The M.2 solid-state drive is sensitive. Inappropriate handling might cause damage and permanent loss of data.

When handling the M.2 solid-state drive, observe the following guidelines:

- Replace the M.2 solid-state drive only for upgrade or repair. The M.2 solid-state drive is not designed for frequent changes or replacement.
- Before replacing the M.2 solid-state drive, make a backup copy of all the data that you want to keep.
- Do not apply pressure to the M.2 solid-state drive.
- Do not touch the contact edge of the M.2 solid-state drive. Otherwise the M.2 solid-state drive might get damaged.
- Do not make the M.2 solid-state drive subject to physical shocks or vibration. Put the M.2 solid-state drive on a soft material, such as cloth, to absorb physical shocks.

To replace the M.2 solid-state drive, do the following:

1. Disable the built-in battery. See “Disabling the built-in battery” on page 84.
2. Ensure that the computer is turned off and disconnected from ac power and all cables.
3. Close the computer display and turn the computer over.
4. Remove the base cover assembly. See “Replacing the base cover assembly” on page 85.
5. Remove the screw that secures the M.2 solid-state drive **1**. Remove the M.2 solid-state drive out of the slot **2**.

   Note: A film might cover the solid-state drive. To access the solid-state drive, open the film first.

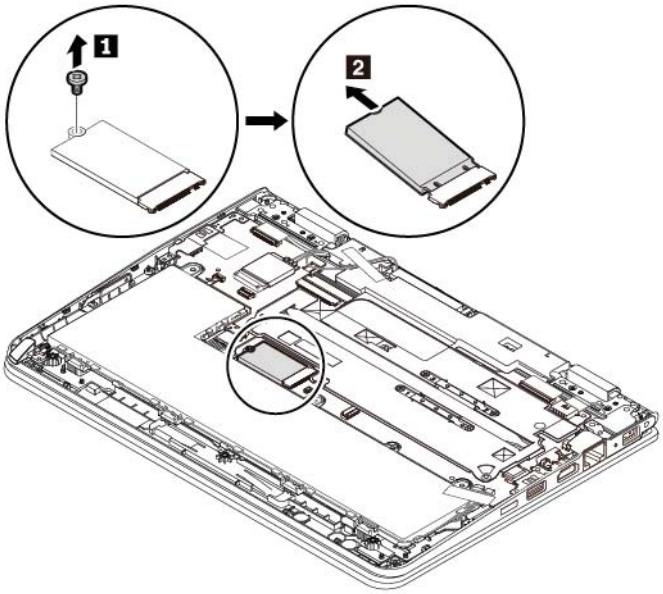

6. Insert the new M.2 solid-state drive into the slot at an angle of about 20 degrees 1. Pivot the M.2 solid-state drive downward 2. Install the screw to secure the M.2 solid-state drive 3.

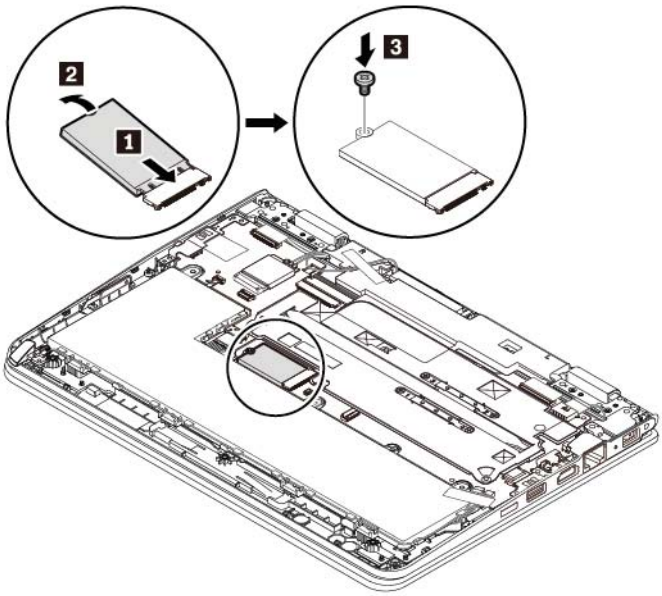

7. Reinstall the base cover assembly.
8. Turn the computer over. Connect the ac power adapter and all cables to the computer.

Replacing the keyboard

Before you start, read “Important safety information” on page v and print the following instructions.

To remove the keyboard, do the following:

1. Disable the built-in battery. See “Disabling the built-in battery” on page 84.
2. Ensure that the computer is turned off and disconnected from ac power and all cables.
3. Close the computer display and turn the computer over.
4. Remove the base cover assembly. See “Replacing the base cover assembly” on page 85.

5. Remove the screws that secure the keyboard 1. Disconnect the keyboard cable from the system board 2 3.

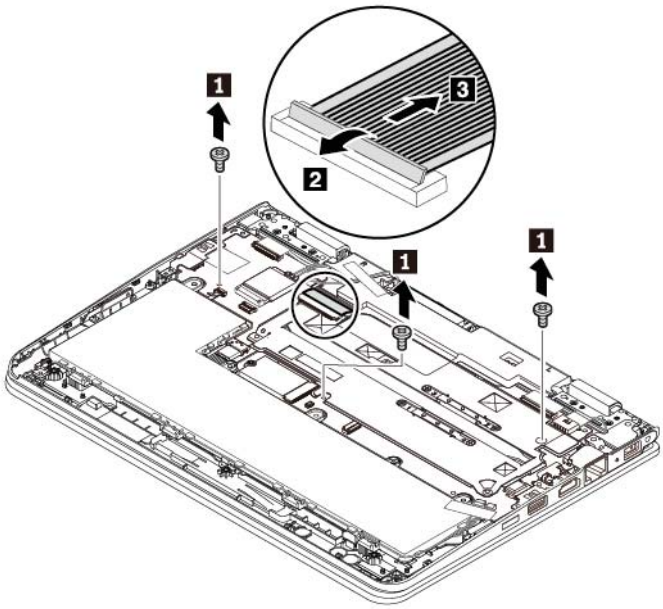

6. Turn the computer over and open the display. Slightly push the keyboard in the direction as shown to release the latches from the keyboard bezel.

7. Lift the keyboard slightly as shown 1. Pivot the keyboard slightly upward to remove it 2 from the keyboard bezel.

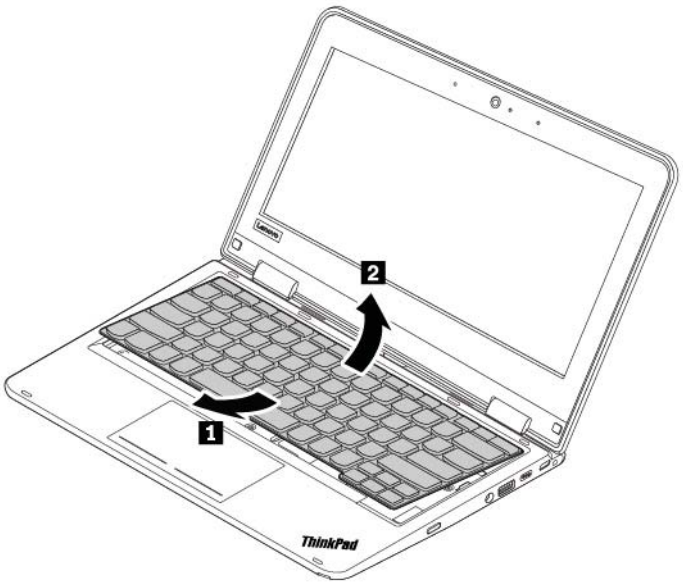

To install the new keyboard, do the following:

1. Insert the keyboard cable connector through the hole in the keyboard bezel 1. Pivot the keyboard upward as shown 2.

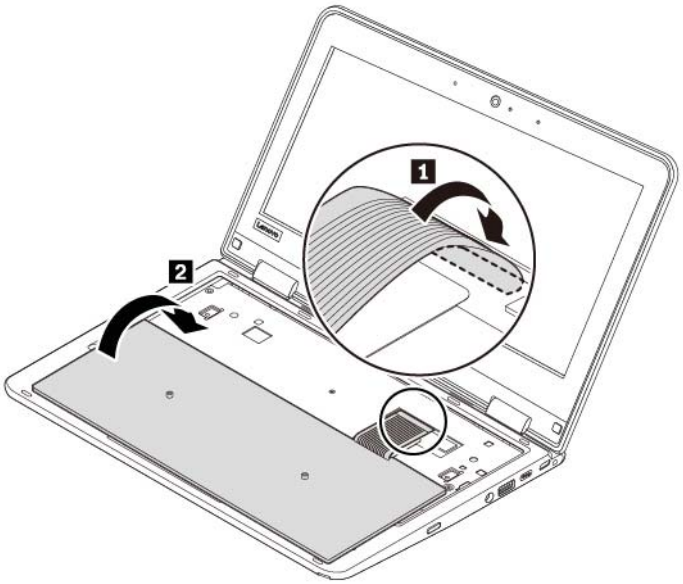

2. Insert the keyboard as shown. Ensure that the front edge of the keyboard (the edge that is close to the display) is under the keyboard bezel.

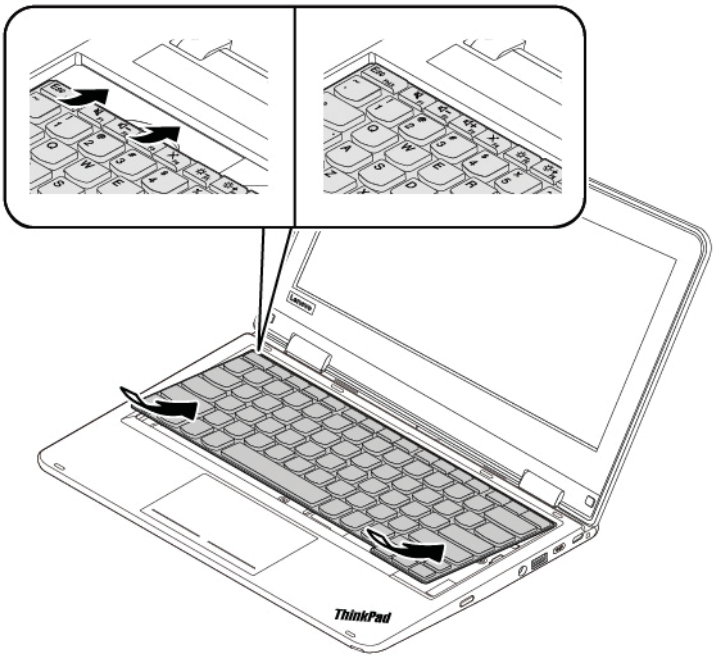

3. Slide the keyboard in the direction as shown. Ensure that the latches are secured under the keyboard frame.

4. Close the computer display and turn the computer over. Connect the keyboard cable connector to the system board 1 2. Install the screws to secure the keyboard 3.

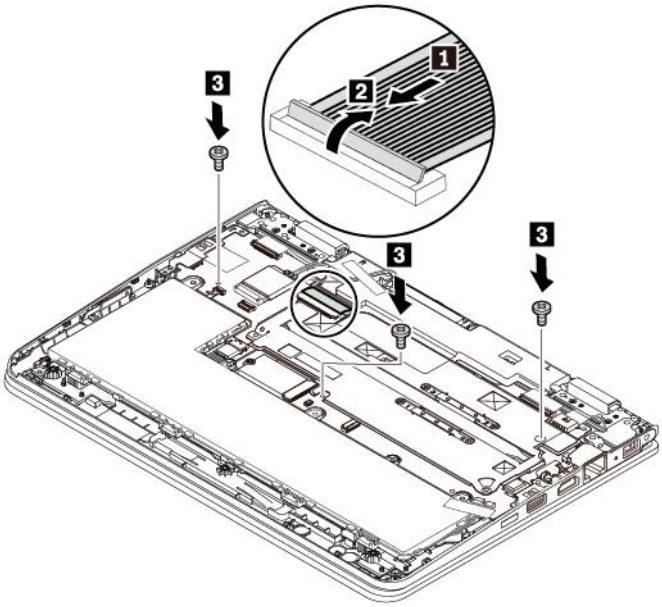

5. Reinstall the base cover assembly.
6. Turn the computer over. Connect the ac power adapter and all cables to the computer.

Replacing the power button card

Before you start, read “Important safety information” on page v and print the following instructions.

To replace the power button card, do the following:

Attention: Sensitive components are mounted on the power button card. Avoid any kind of rough handling during the replacement.

1. Disable the built-in battery. See “Disabling the built-in battery” on page 84.
2. Ensure that the computer is turned off and disconnected from ac power and all cables.
3. Close the computer display, and turn the computer over.
4. Remove the base cover assembly. See “Replacing the base cover assembly” on page 85.

5. Remove the power button card as shown 1. Detach the connector 2 3.

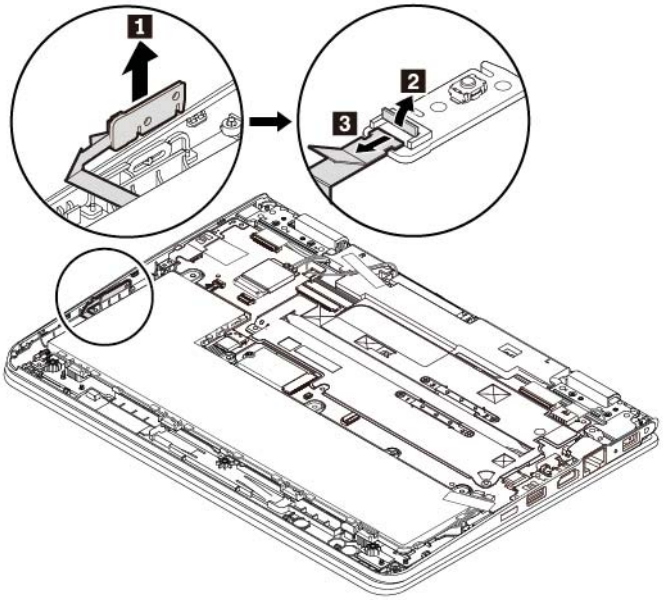

6. Attach the connector 1 2. Align the notches on the power button card with the notches on the computer. Insert the new button I/O card as shown 3.

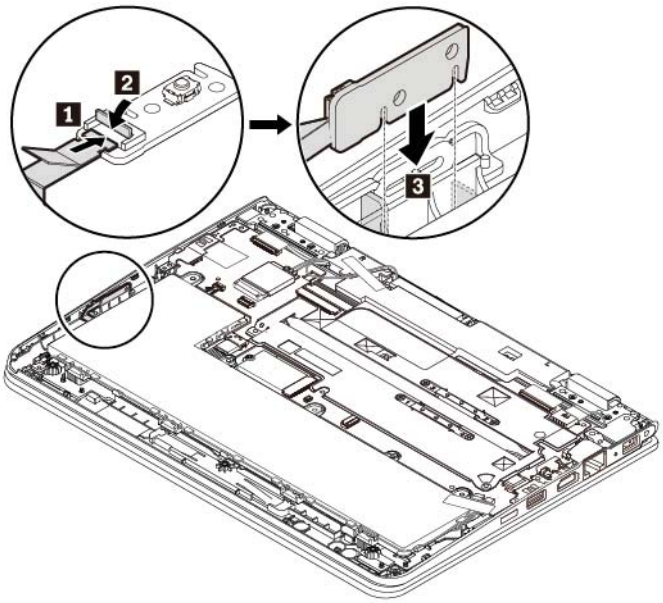

7. Reinstall the base cover assembly.
8. Turn the computer over again. Connect the ac power adapter and all cables to the computer.

Replacing the ThinkPad pen pro charger

Before you start, read “Important safety information” on page v and print the following instructions.

To replace the ThinkPad pen pro charger (hereinafter referred to as the pen charger), do the following:

Attention: Do not touch the golden contact during replacing.

1. Disable the built-in battery. See “Disabling the built-in battery” on page 84.
2. Ensure that the computer is turned off and disconnected from ac power and all cables.
3. Close the computer display and turn the computer over.
4. Remove the base cover assembly. See “Replacing the base cover assembly” on page 85.
5. Remove the tape that secures the pen charger cable to the system board 1. Disconnect the pen charger cable from the system board 2. Remove the screw that secures the pen charger 3.

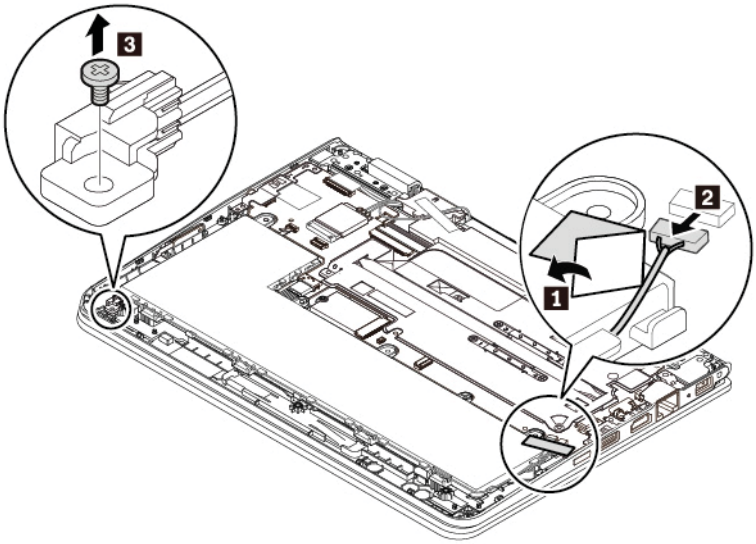

6. Remove the pen charger with the cable from the computer as shown.

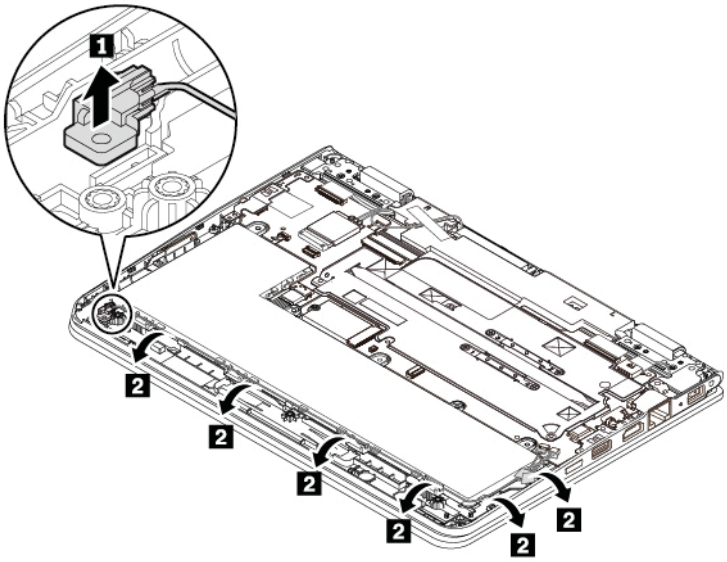

7.

8. Route the pen charger cable as shown 1. Install the screw to secure the pen charger to the computer 2.

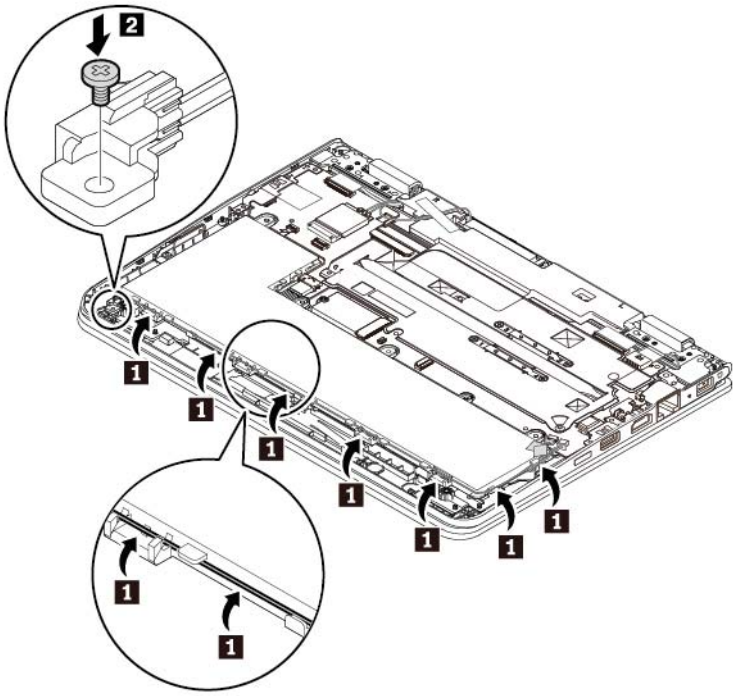

9. Attach the pen charger cable connector to the system board. Secure the cable connector with a tape.

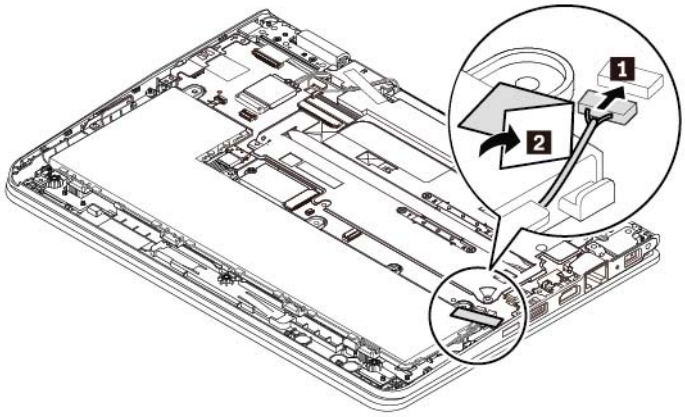

10. Reinstall the base cover assembly.
11. Turn the computer over. Connect the ac power adapter and all cables to the computer.

Chapter 10. Getting support

This chapter provides information about getting help and support from Lenovo.

Before you contact Lenovo

Often, you can solve your computer problems by referring to the information in the explanations of error codes, running diagnostic programs, or by consulting the Lenovo Support Web site.

Registering your computer

Register your computer with Lenovo. For more information, see “Registering your computer” on page 15.

Downloading system updates

Downloading updated software might resolve problems you experience with your computer.

To download updated software, go to the following Web site and follow the instructions on the screen:

http://www.lenovo.com/support

Recording information

Before you talk to a Lenovo representative, record the following important information about your computer.

Recording problem symptoms and details

Collect the answers to the following questions before you call for help. Then, you are able to get help as quickly as possible.

- What is the problem? Is it continuous or intermittent?
- Is there an error message? What is the error code, if any?
- What operating system are you using? Which version?
- Which software applications were running at the time of the problem?
- Can the problem be reproduced? If so, how?

Recording system information

The serial number label is on the bottom of your computer. Record the machine type and the serial number.

- What is the name of your Lenovo product?
- What is the machine type?
- What is the serial number?

Getting help and service

If you need help, service, technical assistance, or more information about Lenovo products, you will find a wide variety of sources available from Lenovo to assist you.

Information about your computer and preinstalled software, if any, is available in the documentation that comes with your computer or on the Lenovo Support Web site at http://www.lenovo.com/support. The documentation includes printed books, online books, readme files, and help files.

© Copyright Lenovo 2018

Microsoft Service Packs are the latest software source for Windows product updates. They are available through Web download (connection charges might apply) or through discs. For more specific information and links, go to https://www.microsoft.com. Lenovo offers technical assistance with installation of, or questions related to, Service Packs for your Lenovo-preinstalled Microsoft Windows product. For more information, contact the Customer Support Center.

Lenovo Support Web site

Technical support information is available on the Lenovo Support Web site at http://www.lenovo.com/support.

This Web site is updated with the latest support information such as the following:

- Drivers and software
- Diagnostic solutions
- Product and service warranty
- Product and parts details
- User guides and manuals
- Knowledge base and frequently asked questions

Calling Lenovo

If you have tried to correct the problem yourself and still need help, during the warranty period, you can get help and information by telephone through the Customer Support Center. The following services are available during the warranty period:

- Problem determination - Trained personnel are available to assist you with determining if you have a hardware problem and deciding what action is necessary to fix the problem.
- Lenovo hardware repair - If the problem is determined to be caused by Lenovo hardware under warranty, trained service personnel are available to provide the applicable level of service.
- Engineering change management - Occasionally, there might be changes that are required after a product has been sold. Lenovo or your reseller, if authorized by Lenovo, will make selected Engineering Changes (ECs) that apply to your hardware available.

The following items are not covered:
- Replacement or use of parts not manufactured for or by Lenovo or nonwarranted parts
- Identification of software problem sources
- Configuration of UEFI BIOS as part of an installation or upgrade
- Changes, modifications, or upgrades to device drivers
- Installation and maintenance of network operating systems (NOS)
- Installation and maintenance of programs

For the terms and conditions of the Lenovo Limited Warranty that apply to your Lenovo hardware product, see “Warranty information” in the *Safety and Warranty Guide* that comes with your computer.

If possible, be near your computer when you make your call. Ensure that you have downloaded the most current drivers and system updates, run diagnostics, and recorded information before you call. When calling for technical assistance, have the following information available:
- Machine type and model
- Serial numbers of your computer, monitor, and other components, or your proof of purchase
- Description of the problem
- Exact wording of any error messages
- Hardware and software configuration information for your system

Telephone numbers

For a list of the Lenovo Support phone numbers for your country or region, go to http://www.lenovo.com/support/phone or refer to the *Safety and Warranty Guide* that comes with your computer.

Note: Phone numbers are subject to change without notice. The latest phone numbers are available at http://www.lenovo.com/support/phone. If the number for your country or region is not provided, contact your Lenovo reseller or Lenovo marketing representative.

Purchasing additional services

During and after the warranty period, you can purchase additional services. Service availability and service name might vary by country or region.

For more information about these services, go to http://www.lenovo.com/essentials.

Appendix A. Supplemental information about the Ubuntu operating system

In limited countries or regions, Lenovo offers customers an option to order computers with the preinstalled Ubuntu® operating system.

If the Ubuntu operating system is available on your computer, read the following information before you use the computer. Ignore any information related to Windows-based programs, utilities, and Lenovo preinstalled applications in this documentation.

Accessing the Lenovo Limited Warranty

This product is covered by the terms of the Lenovo Limited Warranty (LLW), version L505-0010-02 08/2011. You can view the LLW in a number of languages from the following Web site. Read the Lenovo Limited Warranty at:

http://www.lenovo.com/warranty/llw_02

The LLW also is preinstalled on the computer. To access the LLW, go to the following directory:

`/usr/share/doc/lenovo-doc`

If you cannot view the LLW either from the Web site or from your computer, contact your local Lenovo office or reseller to obtain a printed version of the LLW.

Accessing the Ubuntu help system

The Ubuntu help system provides information about how to use the Ubuntu operating system. To access the help system from the Unity, move your pointer to the Launch bar, and then click the **Help** icon. If you cannot find the **Help** icon from the Launch bar, click the **Search** icon, and type Help to search it.

To learn more about the Ubuntu operating system, go to:

https://www.ubuntu.com

Getting support information

If you need help, service, technical assistance, or more information about the Ubuntu operating system or other applications, contact the provider of the Ubuntu operating system or the provider of the application. If you need the service and support for hardware components shipped with your computer, contact Lenovo. For more information about how to contact Lenovo, refer to the *User Guide* and *Safety and Warranty Guide*.

To access the latest *User Guide* and *Safety and Warranty Guide*, go to:

http://www.lenovo.com/support

© Copyright Lenovo 2018

Appendix B. Regulatory information

This chapter provides regulatory and compliance information about Lenovo products.

Certification-related information

Product name: ThinkPad 11e 5th Gen and ThinkPad Yoga 11e 5th Gen

Compliance ID: TP00066F

Machine types: 20LQ, 20LR, 20LM, and 20LN

The latest compliance information is available at:

http://www.lenovo.com/compliance

Wireless-related information

This topic provides wireless-related information about Lenovo products.

Wireless interoperability

Wireless-LAN card is designed to be interoperable with any wireless-LAN product that is based on Direct Sequence Spread Spectrum (DSSS), Complementary Code Keying (CCK), and/or Orthogonal Frequency Division Multiplexing (OFDM) radio technology, and is compliant to:

- The 802.11b/g Standard, 802.11a/b/g, 802.11n, or 802.11ac on wireless-LANs, as defined and approved by the Institute of Electrical and Electronics Engineers.
- The Wireless Fidelity (Wi-Fi®) certification as defined by the Wi-Fi Alliance®.

Your Bluetooth card supports Windows 10 in-box Bluetooth profiles. Some computer models might be equipped with a Bluetooth card compliant with the Bluetooth Specification version 4.2 as defined by the Bluetooth Special Interest Group SIG. However, the Windows operating system might limit the support only on the Bluetooth Specification version 4.1.

Usage environment and your health

This computer contains integrated wireless cards that operate within the guidelines identified by radio frequency (RF) safety standards and recommendations; therefore, Lenovo believes that this product is safe for use by consumers. These standards and recommendations reflect the consensus of the worldwide scientific community, and result from deliberations of panels and committees of scientists, who continually review and interpret the extensive research literature.

In some situations or environments, the use of wireless devices might be restricted by the proprietor of a building or responsible representatives of an organization. For example, these situations and areas might include the following:

- On board of airplanes, in hospitals or near petrol stations, blasting areas (with electro-explosive devices), medical implants or body-worn electronic medical devices, such as pace makers.
- In any other environment where the risk of interference to other devices or services is perceived or identified as harmful.

© Copyright Lenovo 2018

If you are uncertain of the policy that applies to the use of wireless devices in a specific area (such as an airport or hospital), you are encouraged to ask for authorization to use a wireless device prior to turning on the computer.

Locating the UltraConnect wireless antennas

ThinkPad notebook computers feature an integrated UltraConnect™ wireless antenna system built into the display for optimal reception, enabling wireless communication wherever you are.

The following illustration shows the antennas locations of your computer:

1 Wireless-LAN antenna (auxiliary)
2 Wireless-LAN antenna (main)

Wireless-radio compliance information

Computer models equipped with wireless communications comply with the radio frequency and safety standards of any country or region in which it has been approved for wireless use.

Brazil wireless-radio compliance information

Este equipamento opera em caráter secundário, isto é, não tem direito a proteção contra interferência prejudicial, mesmo de estações do mesmo tipo, e não pode causar interferência a sistemas operando em caráter primário.

This equipment is a secondary type device, that is, it is not protected against harmful interference, even if the interference is caused by a device of the same type, and it also cannot cause any interference to primary type devices.

Mexico wireless-radio compliance information

Advertencia: En Mexico la operación de este equipo estásujeta a las siguientes dos condiciones: (1) es posible que este equipo o dispositivo no cause interferencia perjudicial y (2) este equipo o dispositivo debe aceptar cualquier interferencia, incluyendo la que pueda causar su operación no deseada.

Locating wireless regulatory notices

For more information about the wireless regulatory notices, refer to the *Regulatory Notice* shipped with your computer.

If your computer is shipped without the *Regulatory Notice*, you can find it on the Web site at:

http://www.lenovo.com/support

TCO certification

To obtain the TCO certification information for your computer, go to:

http://www.lenovo.com/tco-cert

Export classification notice

This product is subject to the United States Export Administration Regulations (EAR) and has an Export Classification Control Number (ECCN) of 5A992.c. It can be re-exported except to any of the embargoed countries in the EAR E1 country list.

Electronic emission notices

Federal Communications Commission Declaration of Conformity

The following information refers to ThinkPad 11e 5th Gen and ThinkPad Yoga 11e 5th Gen, machine types: 20LQ, 20LR, 20LM, and 20LN.

This equipment has been tested and found to comply with the limits for a Class B digital device, pursuant to Part 15 of the FCC Rules. These limits are designed to provide reasonable protection against harmful interference in a residential installation. This equipment generates, uses, and can radiate radio frequency energy and, if not installed and used in accordance with the instructions, may cause harmful interference to radio communications. However, there is no guarantee that interference will not occur in a particular installation. If this equipment does cause harmful interference to radio or television reception, which can be determined by turning the equipment off and on, the user is encouraged to try to correct the interference by one or more of the following measures:

- Reorient or relocate the receiving antenna.
- Increase the separation between the equipment and receiver.
- Connect the equipment into an outlet on a circuit different from that to which the receiver is connected.
- Consult an authorized dealer or service representative for help.

Lenovo is not responsible for any radio or television interference caused by using other than specified or recommended cables and connectors or by unauthorized changes or modifications to this equipment. Unauthorized changes or modifications could void the user's authority to operate the equipment.

This device complies with Part 15 of the FCC Rules. Operation is subject to the following two conditions: (1) this device may not cause harmful interference, and (2) this device must accept any interference received, including interference that may cause undesired operation.

Responsible Party:
Lenovo (United States) Incorporated
1009 Think Place - Building One
Morrisville, NC 27560
Phone Number: 919-294-5900

Industry Canada Class B emission compliance statement

CAN ICES-3(B)/NMB-3(B)

European Union conformity

EU Contact: Lenovo, Einsteinova 21, 851 01 Bratislava, Slovakia

EMC Directive Statement: This product is in conformity with the protection requirements of EU Council EMC Directive 2014/30/EU on the approximation of the laws of the Member States relating to electromagnetic compatibility.

This product has been tested and found to comply with the limits for Class B equipment according to European Standards harmonized in the Directives in compliance. The Class B requirements for equipment are intended to offer adequate protection to broadcast services within residential environments.

Radio Equipment Directive Statement: This product is in conformity with all the requirements and essential norms that apply to EU Council Radio Equipment Directive 2014/53/EU on the approximation of the laws of the Member States relating to radio equipment. The full text of the system EU declaration of conformity and the EU wireless module declarations are available at the following Internet addresses:

- For notebook computers: http://www.lenovo.com/eu-doc-notebooks
- For tablets: http://www.lenovo.com/eu-doc-tablets

Lenovo cannot accept responsibility for any failure to satisfy the protection requirements resulting from a non-recommended modification of the product, including the installation of option cards from other manufacturers. This product has been tested and found to comply with the limits for Class B equipment according to European Standards harmonized in the Directives in compliance. The limits for Class B equipment were derived for typical residential environments to provide reasonable protection against interference with licensed communication devices.

German Class B compliance statement

Deutschsprachiger EU Hinweis:

Hinweis für Geräte der Klasse B EU-Richtlinie zur Elektromagnetischen Verträglichkeit

Dieses Produkt entspricht den Schutzanforderungen der EU-Richtlinie 2014/30/EU zur Angleichung der Rechtsvorschriften über die elektromagnetische Verträglichkeit in den EU-Mitgliedsstaaten und hält die Grenzwerte der Klasse B der Norm gemäß Richtlinie.

Um dieses sicherzustellen, sind die Geräte wie in den Handbüchern beschrieben zu installieren und zu betreiben. Des Weiteren dürfen auch nur von der Lenovo empfohlene Kabel angeschlossen werden. Lenovo übernimmt keine Verantwortung für die Einhaltung der Schutzanforderungen, wenn das Produkt ohne Zustimmung der Lenovo verändert bzw. wenn Erweiterungskomponenten von Fremdherstellern ohne Empfehlung der Lenovo gesteckt/eingebaut werden.

Deutschland:

Einhaltung des Gesetzes über die elektromagnetische Verträglichkeit von Betriebsmitteln

Dieses Produkt entspricht dem „Gesetz über die elektromagnetische Verträglichkeit von Betriebsmitteln“ EMVG (früher „Gesetz über die elektromagnetische Verträglichkeit von Geräten“). Dies ist die Umsetzung der EMV EU-Richtlinie 2014/30/EU in der Bundesrepublik Deutschland.

Zulassungsbescheinigung laut dem Deutschen Gesetz über die elektromagnetische Verträglichkeit von Betriebsmitteln, EMVG vom 20. Juli 2007 (früher Gesetz über die elektromagnetische Verträglichkeit von Geräten), bzw. der EMV EU Richtlinie 2014/30/EU, für Geräte der Klasse B.

Dieses Gerät ist berechtigt, in Übereinstimmung mit dem Deutschen EMVG das EG-Konformitätszeichen - CE - zu führen. Verantwortlich für die Konformitätserklärung nach Paragraf 5 des EMVG ist die Lenovo (Deutschland) GmbH, Meitnerstr. 9, D-70563 Stuttgart.

Informationen in Hinsicht EMVG Paragraf 4 Abs. (1) 4:

Das Gerät erfüllt die Schutzanforderungen nach EN 55024 und EN 55032 Klasse B.

Japan VCCI Class B compliance statement

この装置は、クラスB情報技術装置です。この装置は家庭環境で使用する事を目的としていますが、この装置がラジオやテレビジョン受信機に近接して使用されると、受信障害を引き起こすことがあります。取扱書に従って正しい取り扱いをして下さい。

VCCI-B

Japan compliance statement for products which connect to the power mains with rated current less than or equal to 20 A per phase

日本の定格電流が 20A/相 以下の機器に対する高調波電流規制
高調波電流規格 JIS C 61000-3-2 適合品

Japan notice for ac power cord

The ac power cord shipped with your product can be used only for this specific product. Do not use the ac power cord for other devices.

本製品およびオプションに電源コード・セットが付属する場合は、
それぞれ専用のものになっていますので他の電気機器には使用し
ないでください。

Lenovo product service information for Taiwan

委製商/進口商名稱: 荷蘭商聯想股份有限公司台灣分公司
進口商地址: 台北市內湖區堤頂大道2段89號5樓
進口商電話: 0800-000-702 (代表號)

Eurasian compliance mark

EAC

Brazil audio notice

Ouvir sons com mais de 85 decibéis por longos períodos pode provocar danos ao sistema auditivo.

Appendix C. WEEE and recycling statements

This chapter provides environmental information about Lenovo products.

General recycling information

Lenovo encourages owners of information technology (IT) equipment to responsibly recycle their equipment when it is no longer needed. Lenovo offers a variety of programs and services to assist equipment owners in recycling their IT products. For information about recycling Lenovo products, go to:

http://www.lenovo.com/recycling

The latest environmental information about our products is available at:

http://www.lenovo.com/ecodeclaration

Important WEEE information

The WEEE marking on Lenovo products applies to countries with WEEE and e-waste regulations (for example, the European WEEE Directive, India E-Waste Management Rules). Appliances are labeled in accordance with local regulations concerning waste electrical and electronic equipment (WEEE). These regulations determine the framework for the return and recycling of used appliances as applicable within each geography. This label is applied to various products to indicate that the product is not to be thrown away, but rather put in the established collection systems for reclaiming these end of life products.

Users of electrical and electronic equipment (EEE) with the WEEE marking must not dispose of end of life EEE as unsorted municipal waste, but use the collection framework available to them for the return, recycle, and recovery of WEEE and to minimize any potential effects of EEE on the environment and human health due to the presence of hazardous substances. Lenovo electrical and electronic equipment (EEE) may contain parts and components, which at end-of-life might qualify as hazardous waste.

EEE and waste electrical and electronic equipment (WEEE) can be delivered free of charge to the place of sale or any distributor that sells electrical and electronic equipment of the same nature and function as the used EEE or WEEE.

For additional WEEE information, go to:

http://www.lenovo.com/recycling

WEEE information for Hungary

Lenovo, as a producer, bears the cost incurred in connection with the fulfillment of Lenovo's obligations under Hungary Law No. 197/2014 (VIII.1.) subsections (1)-(5) of section 12.

© Copyright Lenovo 2018

Japan recycling statements

Collecting and recycling a disused Lenovo computer or monitor

If you are a company employee and need to dispose of a Lenovo computer or monitor that is the property of the company, you must do so in accordance with the Law for Promotion of Effective Utilization of Resources. Computers and monitors are categorized as industrial waste and should be properly disposed of by an industrial waste disposal contractor certified by a local government. In accordance with the Law for Promotion of Effective Utilization of Resources, Lenovo Japan provides, through its PC Collecting and Recycling Services, for the collecting, reuse, and recycling of disused computers and monitors. For details, visit the Lenovo Web site at:

http://www.lenovo.com/recycling/japan

Pursuant to the Law for Promotion of Effective Utilization of Resources, the collecting and recycling of home-used computers and monitors by the manufacturer was begun on October 1, 2003. This service is provided free of charge for home-used computers sold after October 1, 2003. For details, go to:

http://www.lenovo.com/recycling/japan

Disposing of Lenovo computer components

Some Lenovo computer products sold in Japan may have components that contain heavy metals or other environmental sensitive substances. To properly dispose of disused components, such as a printed circuit board or drive, use the methods described above for collecting and recycling a disused computer or monitor.

Disposing of disused lithium batteries from Lenovo computers

A button-shaped lithium battery is installed inside your Lenovo computer to provide power to the computer clock while the computer is off or disconnected from the main power source. If you need to replace it with a new one, contact your place of purchase or contact Lenovo for service. If you need to dispose of a disused lithium battery, insulate it with vinyl tape, contact your place of purchase or an industrial-waste-disposal operator, and follow their instructions.

Disposal of a lithium battery must comply with local ordinances and regulations.

Disposing of a disused battery from Lenovo notebook computers

Your Lenovo notebook computer has a lithium ion battery or a nickel metal hydride battery. If you are a company employee who uses a Lenovo notebook computer and need to dispose of a battery, contact the proper person in Lenovo sales, service, or marketing, and follow that person's instructions. You also can refer to the instructions at:

https://www.lenovo.com/jp/ja/environment/recycle/battery/

If you use a Lenovo notebook computer at home and need to dispose of a battery, you must comply with local ordinances and regulations. You also can refer to the instructions at:

https://www.lenovo.com/jp/ja/environment/recycle/battery/

Recycling information for Brazil

Declarações de Reciclagem no Brasil

Descarte de um Produto Lenovo Fora de Uso

Equipamentos elétricos e eletrônicos não devem ser descartados em lixo comum, mas enviados à pontos de coleta, autorizados pelo fabricante do produto para que sejam encaminhados e processados por empresas especializadas no manuseio de resíduos industriais, devidamente certificadas pelos orgãos ambientais, de acordo com a legislação local.

A Lenovo possui um canal específico para auxiliá-lo no descarte desses produtos. Caso você possua um produto Lenovo em situação de descarte, ligue para o nosso SAC ou encaminhe um e-mail para: reciclar@lenovo.com, informando o modelo, número de série e cidade, a fim de enviarmos as instruções para o correto descarte do seu produto Lenovo.

Battery recycling information for the European Union

EU

Notice: This mark applies only to countries within the European Union (EU).

Batteries or packaging for batteries are labeled in accordance with European Directive 2006/66/EC concerning batteries and accumulators and waste batteries and accumulators. The Directive determines the framework for the return and recycling of used batteries and accumulators as applicable throughout the European Union. This label is applied to various batteries to indicate that the battery is not to be thrown away, but rather reclaimed upon end of life per this Directive.

In accordance with the European Directive 2006/66/EC, batteries and accumulators are labeled to indicate that they are to be collected separately and recycled at end of life. The label on the battery may also include a chemical symbol for the metal concerned in the battery (Pb for lead, Hg for mercury, and Cd for cadmium). Users of batteries and accumulators must not dispose of batteries and accumulators as unsorted municipal waste, but use the collection framework available to customers for the return, recycling, and treatment of batteries and accumulators. Customer participation is important to minimize any potential effects of batteries and accumulators on the environment and human health due to the potential presence of hazardous substances.

Before placing electrical and electronic equipment (EEE) in the waste collection stream or in waste collection facilities, the end user of equipment containing batteries and/or accumulators must remove those batteries and accumulators for separate collection.

Disposing of lithium batteries and battery packs from Lenovo products

A coin-cell type lithium battery might be installed inside your Lenovo product. You can find details about the battery in the product documentation. If the battery needs to be replaced, contact your place of purchase or contact Lenovo for service. If you need to dispose of a lithium battery, insulate it with vinyl tape, contact your place of purchase or a waste-disposal operator, and follow their instructions.

Disposing of battery packs from Lenovo products

Your Lenovo device might contain a lithium-ion battery pack or a nickel metal hydride battery pack. You can find details on the battery pack in the product documentation. If you need to dispose of a battery pack, insulate it with vinyl tape, contact Lenovo sales, service, or your place of purchase, or a waste-disposal

operator, and follow their instructions. You also can refer to the instructions provided in the user guide for your product.

For proper collection and treatment, go to:

http://www.lenovo.com/lenovo/environment

Battery recycling information for Taiwan

廢電池請回收

Battery recycling information for the United States and Canada

US & Canada Only

Recycling information for China

《废弃电器电子产品回收处理管理条例》提示性说明

联想鼓励拥有联想品牌产品的用户当不再需要此类产品时，遵守国家废弃电器电子产品回收处理相关法律法规，将其交给当地具有国家认可的回收处理资质的厂商进行回收处理。更多回收服务信息，请点击进入http://support.lenovo.com.cn/activity/551.htm

Appendix D. Restriction of Hazardous Substances (RoHS) Directive

The latest environmental information about Lenovo products is available at:

http://www.lenovo.com/ecodeclaration

European Union RoHS

This Lenovo product, with included parts (cables, cords, and so on) meets the requirements of Directive 2011/65/EU on the restriction of the use of certain hazardous substances in electrical and electronic equipment ("RoHS recast" or "RoHS 2").

For more information about Lenovo worldwide compliance on RoHS, go to:

http://www.lenovo.com/rohs-communication

Turkish RoHS

The Lenovo product meets the requirements of the Republic of Turkey Directive on the Restriction of the Use of Certain Hazardous Substances in Waste Electrical and Electronic Equipment (WEEE).

Türkiye AEEE Yönetmeliğine Uygunluk Beyanı

Bu Lenovo ürünü, T.C. Çevre ve Orman Bakanlığı'nın "Atık Elektrik ve Elektronik Eşyalarda Bazı Zararlı Maddelerin Kullanımının Sınırlandırılmasına Dair Yönetmelik (AEEE)" direktiflerine uygundur.

AEEE Yönetmeliğine Uygundur.

Ukraine RoHS

Цим підтверджуємо, що продукція Леново відповідає вимогам нормативних актів України, які обмежують вміст небезпечних речовин

India RoHS

RoHS compliant as per E-Waste (Management) Rules.

China RoHS

The information in the following table is applicable for products manufactured on or after January 1, 2015 for sale in the People's Republic of China.

© Copyright Lenovo 2018

产品中有害物质的名称及含量

部件名称	铅（Pb）	汞（Hg）	镉（Cd）	六价铬（Cr（VI））	多溴联苯（PBB）	多溴二苯醚（PBDE）
印刷电路板组件	X	O	O	O	O	O
硬盘	X	O	O	O	O	O
光驱	X	O	O	O	O	O
LCD 面板（LED 背光源）	X	O	O	O	O	O
键盘	X	O	O	O	O	O
内存	X	O	O	O	O	O
电池	X	O	O	O	O	O
电源适配器	X	O	O	O	O	O
底壳、顶盖和扬声器	X	O	O	O	O	O

注：
本表依据SJ/T 11364的规定编制。

O：表示该有害物质在该部件所有均质材料中的含量均在 GB/T 26572标准规定的限量要求以下。

X：表示该有害物质至少在该部件的某一均质材料中的含量超出GB/T 26572标准规定的限量要求。标有“X”的部件，皆因全球技术发展水平限制而无法实现有害物质的替代。印刷电路板组件包括印刷电路板（PCB）及其组件、集成电路（IC）和连接器。某些型号的产品可能不包含上表中的某些部件，请以实际购买机型为准。

图示：

在中华人民共和国境内销售的电子信息产品上将印有“环保使用期限”（EPuP）符号。圆圈中的数字代表产品的正常环保使用期限。

Taiwan RoHS

單元 Unit	限用物質及其化學符號 Restricted substances and its chemical symbols					
	鉛Lead (Pb)	汞Mercury (Hg)	鎘Cadmium (Cd)	六價鉻 Hexavalent chromium (Cr^{+6})	多溴聯苯 Polybrominated biphenyls (PBB)	多溴二苯醚 Polybrominated diphenyl ethers (PBDE)
印刷電路板組件	–	○	○	○	○	○
硬碟機	–	○	○	○	○	○
光碟機	–	○	○	○	○	○
LCD面板（LED背光源）	–	○	○	○	○	○
鍵盤	–	○	○	○	○	○
記憶體	–	○	○	○	○	○
電源供應器	–	○	○	○	○	○
底殼、頂蓋和喇叭	–	○	○	○	○	○

備考1.〝超出0.1 wt %〞及〝超出0.01 wt %〞係指限用物質之百分比含量超出百分比含量基準值。

Note 1：“Exceeding 0.1 wt %” and “exceeding 0.01 wt %” indicate that the percentage content of the restricted substance exceeds the reference percentage value of presence condition.

備考2.〝○〞係指該項限用物質之百分比含量未超出百分比含量基準值。

Note 2：“○” indicates that the percentage content of the restricted substance does not exceed the percentage of reference value of presence.

備考3.〝－〞係指該項限用物質為排除項目。

Note 3：The “–” indicates that the restricted substance corresponds to the exemption.

Appendix E. ENERGY STAR model information

ENERGY STAR® is a joint program of the U.S. Environmental Protection Agency and the U.S. Department of Energy aimed at saving money and protecting the environment through energy efficient products and practices.

Lenovo is proud to offer our customers products with the ENERGY STAR qualified designation. You might find an ENERGY STAR mark affixed on the computer or displayed on the power settings interface. Lenovo computers of the following machine types, if carry an ENERGY STAR mark, have been designed and tested to conform to the ENERGY STAR program requirements for computers.

20LQ, 20LR, 20LM, and 20LN

By using ENERGY STAR qualified products and taking advantage of the power-management features of the computer, you can help reduce the consumption of electricity. Reduced electrical consumption can contribute to potential financial savings, a cleaner environment, and the reduction of greenhouse gas emissions.

For more information about ENERGY STAR, go to:

https://www.energystar.gov

Lenovo encourages you to make efficient use of energy an integral part of your day-to-day operations. To help in this endeavor, Lenovo has preset the following power-management features to take effect when the computer has been inactive for a specified length of time:

Power plan: Default (when plugged into ac power)

- Turn off the display: After 10 minutes
- Put the computer to sleep: After 30 minutes

To awaken the computer from sleep mode, press the Fn key on your keyboard. For more information about these settings, see the Windows help information on the computer.

The Wake on LAN function is enabled when your Lenovo computer is shipped from the factory, and the setting remains valid even when the computer is in sleep mode. If you do not need to have Wake on LAN enabled while the computer is in sleep mode, you can reduce the power consumption and prolong the time in sleep mode, by disabling the setting of Wake on LAN for sleep mode.

To disable the setting of Wake on LAN for sleep mode, do the following:

1. Go to Control Panel and click **Hardware and Sound → Device Manager**.
2. In the Device Manager window, expand **Network adapters**.
3. Right-click your network adapter device, and click **Properties**.

© Copyright Lenovo 2018

4. Click the **Power Management** tab.
5. Clear the **Allow this device to wake the computer** check box.
6. Click **OK**.

Appendix F. Notices

Lenovo may not offer the products, services, or features discussed in this document in all countries. Consult your local Lenovo representative for information on the products and services currently available in your area. Any reference to a Lenovo product, program, or service is not intended to state or imply that only that Lenovo product, program, or service may be used. Any functionally equivalent product, program, or service that does not infringe any Lenovo intellectual property right may be used instead. However, it is the user's responsibility to evaluate and verify the operation of any other product, program, or service.

Lenovo may have patents or pending patent programs covering subject matter described in this document. The furnishing of this document does not give you any license to these patents. You can send license inquiries, in writing, to:

Lenovo (United States), Inc.
1009 Think Place - Building One
Morrisville, NC 27560
U.S.A.
Attention: Lenovo Director of Licensing

LENOVO PROVIDES THIS PUBLICATION "AS IS" WITHOUT WARRANTY OF ANY KIND, EITHER EXPRESS OR IMPLIED, INCLUDING, BUT NOT LIMITED TO, THE IMPLIED WARRANTIES OF NON-INFRINGEMENT, MERCHANTABILITY OR FITNESS FOR A PARTICULAR PURPOSE. Some jurisdictions do not allow disclaimer of express or implied warranties in certain transactions, therefore, this statement may not apply to you.

This information could include technical inaccuracies or typographical errors. Changes are periodically made to the information herein; these changes will be incorporated in new editions of the publication. Lenovo may make improvements and/or changes in the product(s) and/or the application(s) described in this publication at any time without notice.

The products described in this document are not intended for use in implantation or other life support applications where malfunction may result in injury or death to persons. The information contained in this document does not affect or change Lenovo product specifications or warranties. Nothing in this document shall operate as an express or implied license or indemnity under the intellectual property rights of Lenovo or third parties. All information contained in this document was obtained in specific environments and is presented as an illustration. The result obtained in other operating environments may vary.

Lenovo may use or distribute any of the information you supply in any way it believes appropriate without incurring any obligation to you.

Any references in this publication to non-Lenovo Web sites are provided for convenience only and do not in any manner serve as an endorsement of those Web sites. The materials at those Web sites are not part of the materials for this Lenovo product, and use of those Web sites is at your own risk.

Any performance data contained herein was determined in a controlled environment. Therefore, the result obtained in other operating environments may vary significantly. Some measurements may have been made on development-level systems and there is no guarantee that these measurements will be the same on generally available systems. Furthermore, some measurements may have been estimated through extrapolation. Actual results may vary. Users of this document should verify the applicable data for their specific environment.

© Copyright Lenovo 2018

This document is copyrighted by Lenovo and is not covered by any open source license, including any Linux agreement(s) which may accompany software included with this product. Lenovo may update this document at any time without notice.

To obtain the most up-to-date documentation for your computer, go to:

http://www.lenovo.com/support

Appendix G. Trademarks

The following terms are trademarks of Lenovo in the United States, other countries, or both:

Lenovo
Lenovo logo
ThinkPad
ThinkPad logo
UltraConnect

Intel and Intel SpeedStep are trademarks of Intel Corporation or its subsidiaries in the U.S. and/or other countries.

Microsoft, Windows, Direct3D, BitLocker, and Cortana are trademarks of the Microsoft group of companies.

Ubuntu is a registered trademark of Canonical Ltd.

The terms HDMI and HDMI High-Definition Multimedia Interface are trademarks or registered trademarks of HDMI Licensing LLC in the United States and other countries.

Wi-Fi, Wi-Fi Alliance, and Miracast are registered trademarks of Wi-Fi Alliance.

USB-C is a trademark of USB Implementers Forum.

Other company, product, and service names may be trademarks or service marks of others.

© Copyright Lenovo 2018

Lenovo