N° 1-6736
Scope available
on www.cofrac.fr

CERTIFICATE #3478.01

TEST REPORT

EUT Description	**WLAN and BT, 2x2 PCIe M.2 1625 adapter card**
Brand Name	**Intel® Wi-Fi 6E AX411**
Model Name	**AX411E2W**
FCC/IC ID	**FCC ID: PD9AX411E2/ IC ID: 1000M-AX411E2**
Date of Test Start/End	**2021-08-12 / 2021-08-19**
Features	**802.11ax, Tri Band, 2x2 Wi-Fi 6E + Bluetooth® 5.2 + CDB (Concurrent Dual Band simultaneous wi-fi connection)** (see section 5)
Description	**WLAN module + Skycross antenna**

Applicant	**Intel Mobile Communications**
Address	**100 Center Point Circle, Suite 200 / Columbia, SC 29210 / United States**
Contact Person	**Steven Hackett**
Telephone/Fax/ Email	**steven.c.hackett@intel.com**

Reference Standards	**FCC 47 CFR Part §2.1093** **RSS 102, Issue 5** (see section 1)	
RF Exposure Environment	**Portable devices - General population/uncontrolled exposure**	
Exposure Conditions	**Body worn**	
	SAR Result	SAR Limit
Maximum SAR Result & Limit	**0.58 W/kg (1g)**	**1.6 W/kg (1g)**
Min. test separation distance	**15mm to phantom**	

Test Report identification	**210611-03.TR07**
Revision Control	**Rev. 00** **This test report revision replaces any previous test report revision** (see section 8)

The test results relate only to the samples tested.
Reference to accreditation shall be used only by full reproduction of test report.

Issued by	Reviewed by
Digitally signed by Vaso Kaculini Date: 2021-09-13 09:21:52	Digitally signed by Ines Kharrat Date: 2021.09.13 11:00:04+02'00'
Vaso KACULINI (Test Engineer Lead)	Ines KHARRAT (Technical Manager)

Intel Corporation S.A.S – WRF Lab
425 rue de Goa – Le Cargo B6 - 06600 Antibes, France
Tel. +33493001400 / Fax +33493001401

Table of Contents

1. Standards, reference documents and applicable test methods 4
2. General conditions, competences and guarantees 4
3. Environmental Conditions 5
4. Test samples 5
5. EUT Features 6
6. Remarks and comments 9
7. Test Verdicts summary 9
8. Document Revision History 9
Annex A. Test & System Description 10
A.1 SAR DEFINITION 10
A.2 SAR MEASUREMENT SYSTEM 11
A.2.1 SAR Measurement Setup 11
A.2.2 E-Field Measurement Probe 12
A.2.3 SAM Phantom 12
A.2.4 Flat Phantom 13
A.2.5 Device Positioner 13
A.3 DATA EVALUATION 14
A.4 SYSTEM AND LIQUID CHECK 16
A.4.1 System Check 16
A.4.2 Liquid Check 17
A.5 TEST EQUIPMENT LIST 18
A.5.1 Tissue Simulant Liquid 18
A.6 MEASUREMENT UNCERTAINTY EVALUATION 19
A.7 RF EXPOSURE LIMITS 20
Annex B. Test Results 21
B.1 TEST CONDITIONS 21
B.1.1 Test SAR Test positions relative to the phantom 21
B.1.2 Test signal, Output power and Test Frequencies 21
B.1.3 Evaluation Exclusion and Test Reductions 22
B.2 CONDUCTED POWER MEASUREMENTS 24
B.2.1 WLAN 2.4GHz 24
B.2.2 WLAN 5GHz (U-NII) 25
B.2.3 Bluetooth 31
B.3 TISSUE PARAMETERS MEASUREMENT 32
B.4 SYSTEM CHECK MEASUREMENTS 32
B.5 SAR TEST RESULTS 33
B.5.1 802.11b/g/n/ax – DTS/ Bluetooth – 2.4GHz - DSS 33
B.5.2 802.11a/n/ac/ax– U-NII-2A 33
B.5.3 802.11a/n/ac/ax– U-NII-2C 34
B.5.4 802.11a/n/ac/ax– U-NII-3 34
B.5.5 SAR Measurement Variability 35
B.5.6 Simultaneous Transmission SAR Evaluation 36
Annex C. Test System Plots 38
Annex D. TSL Dielectric Parameters 46
D.1 BODY DTS 2450MHZ 46
D.2 BODY 5200MHZ-5900MHZ 47

Annex E. Calibration Certificates 49

Annex F. Photographs 51

F.1 TEST SAMPLE 51
F.2 TEST POSITIONS 52
F.3 ANTENNA HOST PLATFORM LOCATION AND ADJACENT EDGE POSITIONS RELATIVE TO THE BODY 53
F.4 PHANTOM LIQUID LEVEL DURING MEASUREMENTS 54

1. Standards, reference documents and applicable test methods

FCC	1. FCC Title 47 CFR Part §2.1093 – Radiofrequency radiation exposure evaluation: portable devices. 2019-10-01 Edition 2. FCC OET KDB 248227 D01 v02r02 – SAR guidance for IEEE 802.11 (Wi-Fi) transmitters. 3. FCC OET KDB 447498 D01 v06 –RF Exposure Procedures and Equipment Authorization Policies for Mobile and Portable Devices. 4. FCC OET KDB 865664 D01 v01r04 – SAR Measurement Requirements for 100 MHz to 6 GHz. 5. FCC OET KDB 865664 D02 v01r02 – RF Exposure Compliance Reporting and Documentation Considerations. 6. TCB Workshop April 2019 – RF Exposure Procedures (802.11ax SAR Testing) 7. IEEE Std 1528-2013 – IEEE Recommended Practice Determining the Peak Spatial-Average Specific Absorption Rate (SAR) in the Human Head from Wireless Communication Devices: Measurement Techniques…
ISED	1. ISED RSS 102, Issue 5 – Radio Frequency (RF) Exposure Compliance of Radio communication Apparatus (All Frequency Bands 2. ISED RSS-102 Supplementary Procedures SPR-001 SAR testing requirements with regard to bystanders for laptop type computers with antennas built-In on display screen (Laptop Mode / Tablet Mode) 3. ISED Notice 2016-DRS001 – Applicability of latest FCC RF Exposure KDB Procedures and Other Procedures. 4. ISED Notice 2020-DRS0020 – Applicability of IEC/IEEE62209-1528 and IEC62209-3 Standard 5. ISED Notice 2012-DRS0529 – SAR correction for measured conductivity and relative permittivity based on IEC 62209-2 standard. 6. FCC OET KDB 248227 D01 v02r02 – SAR guidance for IEEE 802.11 (Wi-Fi) transmitters. 7. FCC OET KDB 447498 D01 v06 –RF Exposure Procedures and Equipment Authorization Policies for Mobile and Portable Devices. 8. IEC/IEEE 62209-1528:2020 - Measurement procedure for the assessment of specific absorption rate of human exposure to radio frequency fields from hand-held and body-mounted wireless communication devices – Part 1528: Human models, instrumentation, and procedures (Frequency range of 4 MHz to 10 GHz)

2. General conditions, competences and guarantees

- ✓ Tests performed under FCC standards identified in section 1 are covered by A2LA accreditation.
- ✓ Tests performed under ISED standards identified in section 1 are covered by Cofrac accreditation.
- ✓ Intel Corporation SAS Wireless RF Lab (Intel WRF Lab) is an ISO/IEC 17025:2017 laboratory accredited by the American Association for Laboratory Accreditation (A2LA) with the certificate number 3478.01.
- ✓ Intel Corporation SAS Wireless RF Lab (Intel WRF Lab) is an Accredited Test Firm recognized by the FCC, with Designation Number FR0011.
- ✓ Intel Corporation SAS Wireless RF Lab (Intel WRF Lab) is an ISO/IEC 17025:2017 testing laboratory accredited by the French Committee for Accreditation (Cofrac) with the certificate number 1-6736.
- ✓ Intel Corporation SAS Wireless RF Lab (Intel WRF Lab) is a Registered Test Site listed by ISED, with ISED #1000Y.
- ✓ Intel WRF Lab declines any responsibility with respect to the identified information provided by the customer and that may affect the validity of results.
- ✓ Intel WRF Lab only provides testing services and is committed to providing reliable, unbiased test results and interpretations.
- ✓ Intel WRF Lab is liable to the client for the maintenance of the confidentiality of all information related to the item under test and the results of the test.
- ✓ Intel WRF Lab has developed calibration and proficiency programs for its measurement equipment to ensure correlated and reliable results to its customers.
- ✓ This report is only referred to the item that has undergone the test.
- ✓ This report does not imply an approval of the product by the Certification Bodies or competent Authorities.

3. Environmental Conditions

✓ At the site where the measurements were performed the following limits were not exceeded during the tests:

Temperature	23.3ºC ± 2ºC
Humidity	39.4% ± 10%
Liquid Temperature	21.0ºC ± 2ºC

4. Test samples

Sample	Identification #	Description	Model	Serial #	Date of receipt
#01	210611-03. S18	WLAN and BT, 2x2 PCIe M.2 1625 adapter card	AX411E2W	WFM: 3413E8F11F3A	2021-07-13
	200611-01. S11	EXTENDER SNJ A4	-	-	2020-11-30
	170000-01. S15	Laptop	DELL Latitude 6430U	8LGVLX1	2017-06-12
	200611-03. S34	Reference Antenna	Sky-Cross	-	2020-07-12

5. EUT Features

The herein information is provided by the customer

Brand Name	Intel® Wi-Fi 6E AX411
Model Name	AX411E2W
Software Version	99.2100.63.0-12409
Driver Version	WLAN 99.0.63.5, BT 22.70.31654.21224
Prototype / Production	Production
Supported Radios	802.11b/g/n/ax 2.4GHz (2400.0 – 2483.5 MHz) 802.11a/n/ac/ax 5.2GHz (5150.0 – 5350.0 MHz) 5.6GHz (5470.0 – 5725.0 MHz) 5.8GHz (5725.0 – 5850.0 MHz) Bluetooth 5.2 2.4GHz (2400.0 – 2483.5 MHz)
Antenna Information	

Transmitter	Main (chain B)	Aux (Chain A)
Manufacturer	SkyCross	SkyCross
Antenna type	PIFA	PIFA
Part number	n/a	n/a

See Annex *F* for more details on antennas location.

Simultaneous Transmission Configurations

Mode	TX Chain B	TX Chain A
Single Band Mode 2.4GHz		
2.4GHz MIMO	WLAN 2.4GHz	WLAN 2.4GHz
2.4GHz SISO / Co-run	WLAN 2.4GHz	BT
Single Band Mode 5GHz		
5GHz MIMO	WLAN 5GHz	WLAN 5GHz
5GHz + BT Co-run	WLAN 5GHz	BT
5GHz MIMO + BT Co-run	WLAN 5GHz	WLAN 5GHz + BT
CDB Mode		
BT Co-run – CDB SISO	WLAN 2.4GHz + WLAN 5GHz	BT
CDB only SISO	WLAN 2.4GHz + WLAN 5GHz	-
CDB only SISO	-	WLAN 2.4GHz + WLAN 5GHz
CDB only MIMO	WLAN 2.4GHz + WLAN 5GHz	WLAN 2.4GHz + WLAN 5GHz
BT Co-run (CDB SISO)	WLAN 2.4GHz	WLAN 5GHz + BT

Additional Information	No WWAN transmitter is considered in this report
	5.60-5.65 GHz band (TDWR) is supported by the device
	Band gap is supported by the device

Supported Radios

Mode	Duty Cycle	Modulation	Band	UL Freq Range (MHz)	Measured Max. Conducted Power (dBm)
802.11b/g/n/ax	100%	BPSK QPSK 16QAM 64QAM	2.4GHz	2400-2483.5	20.97
802.11a/n/ac/ax	100%	BPSK QPSK 16QAM 64QAM 256QAM	5.2GHz	5150-5250	NM
			5.3GHz	5250-5350	20.87
			5.6GHz	5475-5725	20.84
			5.8GHz	5725-5850	20.78
BDR/EDR v5.2	77%	GFSK π/4 DQPSK 8DPSK	2.4GHz	2400-2483.5	10.57
Bluetooth LE v5.2	33%	GFSK	2.4GHz	2400-2483.5	NM

NM: Not Measured

Maximum Output power specification + Tune up tolerance limit			SISO mode	
Equipment Class	Mode	BW (MHz)	Chain A (dBm)	Chain B (dBm)
DTS	802.11b	20	18.75	19.75
	802.11g	20	21.00	21.00
	802.11n20	20	21.00	21.00
	802.11ax20	20	21.00	21.00
	802.11n40	40	17.00	18.00
	802.11ax40	40	17.00	18.00
U-NII-1 (For FCC)	802.11a	20	21.00	21.00
	802.11n20	20	21.00	21.00
	802.11ax20	20	21.00	21.00
	802.11n40	40	20.50	20.50
	802.11ax40	40	20.50	20.50
	802.11ac80	80	17.25	17.25
	802.11ax80	80	17.25	17.25
	802.11ac160	160	14.50	14.50
	802.11ax160	160	14.50	14.50
U-NII-1 (for ISED)	802.11a	20	15.50	15.50
	802.11n20	20	15.50	15.50
	802.11ax20	20	15.50	15.50
	802.11n40	40	18.00	18.00
	802.11ax40	40	18.00	18.00
	802.11ac80	80	17.50	17.50
	802.11ax80	80	17.50	17.50
	802.11ac160	160	18.00	17.50
	802.11ax160	160	18.00	17.50
U-NII-2A	802.11a	20	21.00	21.00
	802.11n20	20	21.00	21.00
	802.11ax20	20	21.00	21.00
	802.11n40	40	20.75	21.00
	802.11ax40	40	20.75	21.00
	802.11ac80	80	17.75	17.75
	802.11ax80	80	17.75	17.75
	802.11ac160	160	14.50	14.50
	802.11ax160	160	14.50	14.50
U-NII-2C	802.11a	20	21.00	21.00
	802.11n20	20	21.00	21.00
	802.11ax20	20	21.00	21.00
	802.11n40	40	21.00	21.00
	802.11ax40	40	21.00	21.00
	802.11ac80	80	21.00	21.00
	802.11ax80	80	21.00	21.00
	802.11ac160	160	15.75	15.75
	802.11ax160	160	15.75	15.75
U-NII-3	802.11a	20	21.00	21.00
	802.11n20	20	21.00	21.00
	802.11ax20	20	21.00	21.00
	802.11n40	40	21.00	21.00

	802.11ax40	40	21.00	21.00
	802.11ac80	80	21.00	21.00
	802.11ax80	80	21.00	21.00
BT	Bluetooth v5.2 BDR	1	11.50	
	Bluetooth v5.2 EDR2	1	11.00	
	Bluetooth v5.2 EDR3	1	11.00	
	BLE	2	9.00	

6. Remarks and comments

1. The conducted values are obtained by applying the provided power table to the AX411E2W Intel module, as requested by the customer.
2. Only the plots for the test positions with the highest measured SAR per band/mode are included in Annex C as required per FCC OET KDB 865664 D02, paragraph 2.3.h

7. Test Verdicts summary

The statement of conformity to applicable standards in the table below are based on the measured values, without taking into account the measurement uncertainties.

Standard	Band	Highest Reported SAR (1g) (W/kg)	Verdict
802.11b/g/n/ax	DTS	0.37	P
802.11a/n/ac/ax	U-NII-1	NM	NA
	U-NII-2A	0.58	P
	U-NII-2C	0.32	P
	U-NII-3	0.27	P
Bluetooth	DSS	0.03	P

P: Pass
F: Fail
NM: Not Measured
NA: Not Applicable

According to the FCC OET KDB 690783 D01, this is the summary of the values for the Grant Listing:

Highest Reported SAR (1g) (W/kg)			
Exposure Condition	Equipment Class		
	DTS	DSS	U-NII
Body Worn	0.37	0.03	0.58
Simultaneous Tx	Sum-SAR:1.53	Sum-SAR:1.06	Sum-SAR: 1.53

Considering the results of the performed test according to FCC 47CFR Part 2.1093 and ISED RSS 102 Issue 5, the item under test is IN COMPLIANCE with the requested specifications specified in Section1. Standards, reference documents and applicable test methods

8. Document Revision History

Revision #	Modified by	Revision Details
Rev. 00	A. Dihissou	First Issue

Annex A. Test & System Description

A.1 SAR Definition

Specific Absorption rate is defined as the time derivative of the incremental energy (dW) absorbed by (dissipated in) and incremental mass (dm) contained in a volume element (dV) of a given density (ρ).

$$SAR = \frac{d}{dt} \cdot \left(\frac{dW}{dm}\right) = \frac{d}{dt} \cdot \left(\frac{dW}{\rho \cdot dV}\right)$$

SAR is expressed in units of watts per kilogram (W/kg). SAR can be related to the electric field at a point by

$$SAR = \frac{\sigma |E|^2}{\rho}$$

Where:

σ = Conductivity of the tissue (S/m)
ρ = Mass density of the tissue (kg/m3)
E = RMS electric field strength (V/m)

A.2 SAR Measurement System

A.2.1 SAR Measurement Setup

The DASY6 system for performing compliance tests consists of the following items:

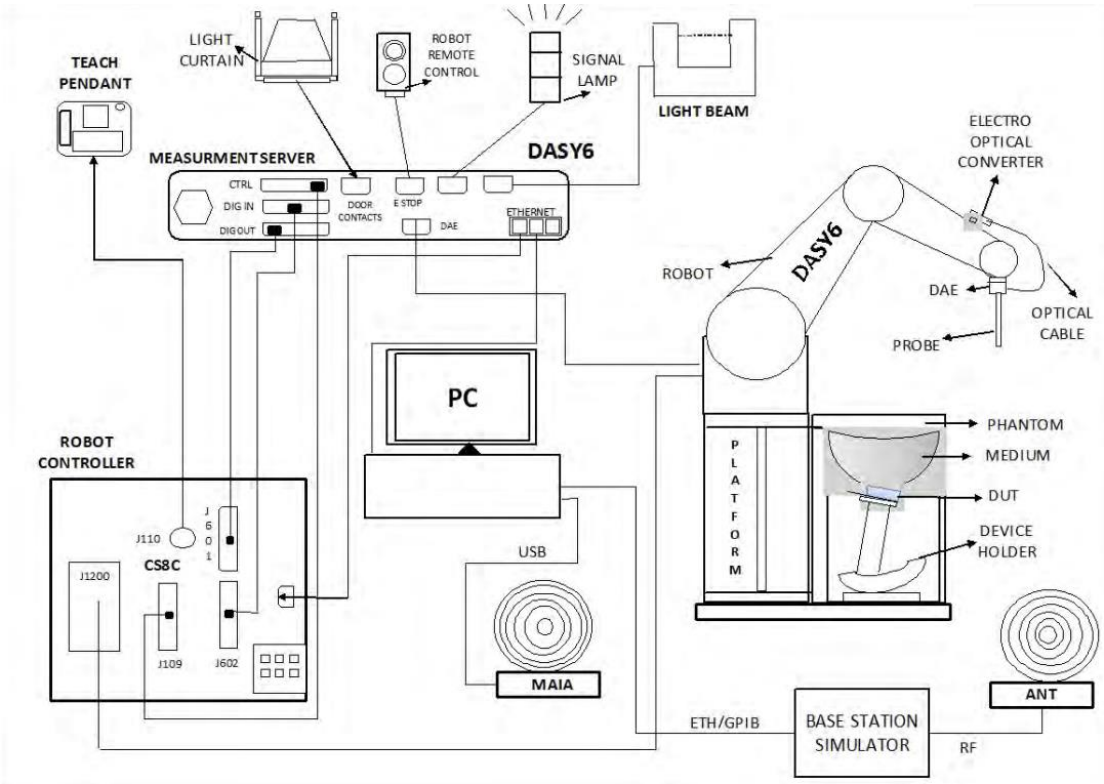

- ✓ A standard high precision 6-axis robot (Staübli TX/RX family) with controller, teach pendant and software. It includes an arm extension for accommodating the data acquisition electronics (DAE)
- ✓ An isotropic field probe optimized and calibrated for the targeted measurements.
- ✓ A data acquisition electronics (DAE) which performs the signal amplification, signal multiplexing, AD-conversion, offset measurements, mechanical surface detection, collision detection, etc. The unit is battery powered with standard or rechargeable batteries. The signal is optically transmitted to the EOC.
- ✓ The Electro-optical Converter (EOC) performs the conversion from optical to electrical signals for the digital communication to the DAE. The EOC signal is transmitted to the measurement server.
- ✓ The function of the measurement server is to perform the time critical tasks such as signal filtering, control of the robot operation and fast movements interrupts.
- ✓ The Light Beam used is for probe alignment. This improves the (absolute) accuracy of the probe positioning.
- ✓ A computer running Win7 professional operating system and the DASY6 software.
- ✓ Remote control and teach pendant as well as additional circuitry for robot safety such as warning lamps, etc.
- ✓ The phantom, the device holder and other accessories according to the targeted measurement.
- ✓ MAIA is a hardware interface (Antenna) used to evaluate the modulation and audio interference characteristics of RF signals.
- ✓ ANT is an ultra-wideband antenna for use with the base station simulators over 698 MHz to 6GHz.
- ✓ The base station simulator is an equipment used for SAR cellular tests in order to emulate the cellular signals characteristics and behavior between a regular base station and the equipment under test.
- ✓ Tissue simulating liquid.
- ✓ System Validation dipoles.
- ✓ Network emulator or RF test tool

A.2.2 E-Field Measurement Probe

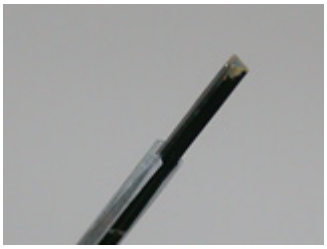

The probe is constructed using three orthogonal dipole sensors arranged on an interlocking, triangular prism core. The probe has built-in shielding against static charges and is contained within a PEEK cylindrical enclosure material at the tip.

The probe's characteristics are:

Frequency Range	30MHz – 6GHz
Length	337 mm
Probe tip external diameter	2.5 mm
Typical distance between dipoles and the probe tip	1 mm
Axial Isotropy (in human-equivalent liquids)	±0.3 dB
Hemispherical Isotropy (in human-equivalent liquids)	±0.5 dB
Linearity	±0.2 dB
Maximum operating SAR	100 W/kg
Lower SAR detection threshold	0.001 W/kg

A.2.3 SAM Phantom

The shell corresponds to the specifications of the Specific Anthropomorphic Mannequin (SAM) phantom defined in IEEE 1528 and IEC/IEEE 62209-1528. It enables the dosimetry evaluation of left- and right-hand phone usage as well as body mounted usage at the flat phantom region. A cover prevents evaporation of the liquid. Reference markings on the phantom allow the complete setup of all predefined phantom positions and measurement grids by teaching three points with the robot.

The phantom's characteristics are:

Material	Vinylester, glass fiber reinforced (VE-GF)
Shell thickness	2 mm ± 0.2 mm
Shell thickness at ERP	6 ± 0.2 mm
Filling volume	25 Liters
Dimensions	Length: 1000mm / Width: 500mm

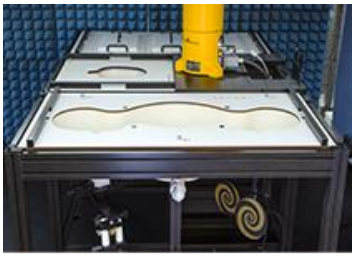

A.2.4 Flat Phantom

Phantom for compliance testing of handheld and body-mounted wireless devices in the frequency range of 30 MHz to 6 GHz. ELI is fully compatible with the IEC 62209-2 standard and all known tissue simulating liquids. ELI has been optimized regarding its performance and can be integrated into our standard phantom tables. A cover prevents evaporation of the liquid. Reference markings on the phantom allow installation of the complete setup, including all predefined phantom positions and measurement grids, by teaching three points. The phantom is compatible with all SPEAG dosimetric probes and dipoles.

The phantom's characteristics are:

Material	Vinylester, glass fiber reinforced (VE-GF)
Shell thickness	2 mm ± 0.2 mm
Filling volume	30 Liters approx.
Dimensions	Major axis: 600mm / Minor axis: 400mm

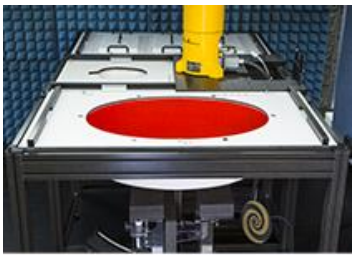

A.2.5 Device Positioner

The SAR in the phantom is approximately inversely proportional to the square of the distance between the source and the liquid surface. For a source at 5 mm distance, a positioning uncertainty of 0.5 mm would produce a SAR uncertainty of 20%. Accurate device positioning is therefore crucial for accurate and repeatable measurements. The positions in which the devices must be measured are defined by the standards.

The DASY device holder is designed to cope with the different positions given in the standard. It has two scales for device rotation (with respect to the body axis) and device inclination (with respect to the line between the ear reference points). The rotation center for both scales is the ear reference point (ERP). Thus the device needs no repositioning when changing the angles.

The DASY device holder is constructed of low-loss POM material having the following dielectric parameters: relative permittivity ε=3 and loss tangent δ=0.02. The amount of dielectric material has been reduced in the closest vicinity of the device, since measurements have suggested that the influence of the clamp on the test results could thus be lowered.

A simple but effective and easy-to-use extension for the Mounting Device; facilitates testing of larger devices according to IEC 62209-2 (e.g., laptops, cameras, etc.); lightweight and fits easily on the upper part of the Mounting Device in place of the phone positioner. The extension is fully compatible with the Twin SAM, ELI and other Flat Phantoms.

A.3 Data Evaluation

- **Power Reference measurement**

The robot measures the E field in a specified reference position that can be either the selected section's grid reference point or a user point in this section at 4mm of the inner surface of the phantom, 2mm for frequencies above 3GHz.

- **Area Scan**

Measurement procedures for evaluating SAR from wireless handsets typically start with a coarse measurement grid to determine the approximate location of the local peak SAR values. This is known as the area-scan procedure. The SAR distribution is scanned along the inside surface of one side of the phantom head, at least for an area larger than the projection of the handset and antenna. The distance between the measured points and phantom surface should be less than 8 mm, and should remain constant (with variation less than ± 1 mm) during the entire scan in order to determine the locations of the local peak SAR with sufficient accuracy. The angle between the probe axis and the surface normal line is recommended but not required to be less than 30°. If this angle is larger than 30° and the closest point on the probe-tip housing to the phantom surface is closer than a probe diameter, the boundary effect may become larger and polarization dependent. This additional uncertainty needs to be analyzed and accounted for. To achieve this, modified test procedures and additional uncertainty analyses not described in this recommended practice may be required. The measurement and interpolation point spacing should be chosen such as to allow identification of the local peak locations to within one-half of the linear dimension of a side of the zoom-scan volume. Because a local peak having specific amplitude and steep gradients may produce a lower peak spatial-average SAR compared to peaks with slightly lower amplitude and less steep gradients, it is necessary to evaluate these other peaks as well. However, since the spatial gradients of local SAR peaks are a function of the wavelength inside the tissue-equivalent liquid and the incident magnetic field strength, it is not necessary to evaluate local peaks that are less than 2 dB or more below the global maximum peak. Two-dimensional spline algorithms (Brishoual et al. 2001; Press et al., 1996) are typically used to determine the peaks and gradients within the scanned area. If a peak is found at a distance from the scan border of less than one-half the edge dimension of the desired 1 g or 10 g cube, the measurement area should be enlarged if possible.

- **Zoom Scan**

To evaluate the peak spatial-average SAR values for 1 g or 10 g cubes, fine resolution volume scans, called zoom scans, are performed at the peak SAR locations identified during the area scan. The minimum zoom scan volume size should extend at least 1.5 times the edge dimension of a 1 g cube in all directions from the center of the scan volume, for both 1 g and 10 g peak spatial-average SAR evaluations. Along the phantom curved surfaces, the front face of the volume facing the tissue/liquid interface conforms to the curved boundary, to ensure that all SAR peaks are captured. The back face should be equally distorted to maintain the correct averaging mass. The flatness and orientation of the four side faces are unchanged from that of a cube whose orientation is within ± 30° of the line normal to the phantom at the center of the cube face next to the phantom surface. The peak local SAR locations that were determined in the area scan (interpolated values) should be used for the centers of the zoom scans. If a scan volume cannot be centered due to proximity of a phantom shape feature, the probe should be tilted to allow scan volume enlargement. If probe tilt is not feasible, the zoom-scan origin may be shifted, but not by more than half of the 1 g or 10 g cube edge dimension.

After the zoom-scan measurement, extrapolations from the closest measured points to the surface, for example along lines parallel to the zoom-scan centerline, and interpolations to a finer resolution between all measured and extrapolated points are performed. Extrapolation algorithm considerations are described in 6.5.3, and 3-D spline methods (Brishoual et al., 2001; Kreyszig, 1983; Press et al., 1996) can be used for interpolation. The peak spatial-average SAR is finally determined by a numerical averaging of the local SAR values in the interpolation grid, using for example a trapezoidal algorithm for the integration (averaging).

In some areas of the phantom, such as the jaw and upper head regions, the angle of the probe with respect to the line normal to the surface may be relatively large, e.g., greater than ± 30º, which could increase the boundary effect error to a larger level. In these cases, during the zoom scan a change in the orientation of the probe, the phantom, or both is recommended but not required for the duration of the zoom scan, so that the angle between the probe axis and the line normal to the surface is within 30º for all measurement points.

- **Power Drift measurement**

The robot re-measures the E-Field in the same reference location measured at the Power Reference. The drift measurement gives the field difference in dB from the first to the last reference reading. This allows a user to monitor the power drift of the device under test that must remain within a maximum variation of ±5%.

- **Post-processing**

The procedure for spatial peak SAR evaluation has been implemented according to the IEEE1528 and IEC/IEEE 62209-1528 standards. It can be conducted for 1g and 10g.

The software allows evaluations that combine measured data and robot positions, such as:

- ✓ Maximum search
- ✓ Extrapolation
- ✓ Boundary correction
- ✓ Peak search for averaged SAR

Interpolation between the measured points is performed when the resolution of the grid is not fine enough to compute the average SAR over a given mass.

Extrapolation routines are used to obtain SAR values between the lowest measurement points and the inner phantom surface. The extrapolation is determined by the surface detection distance and the probe sensor offset. Several measurements at different distances are necessary for the extrapolation.

A.4 System and Liquid Check

A.4.1 System Check

The system performance check verifies that the system operates within its specifications. System and operator errors can be detected and corrected. It is recommended that the system performance check be performed prior to any usage of the system in order to guarantee reproducible results.

The system performance check uses normal SAR measurements in a simplified setup with a well characterized source. This setup was selected to give a high sensitivity to all parameters that might fail or vary over time. The system check does not intend to replace the calibration of the components, but indicates situations where the system uncertainty is exceeded due to drift or failure.

In the simplified setup for system check, the EUT is replaced by a calibrated dipole and the power source is replaced by a controlled continuous wave generated by a signal generator. The calibrated dipole must be placed beneath the flat phantom section of the phantom at the correct distance.

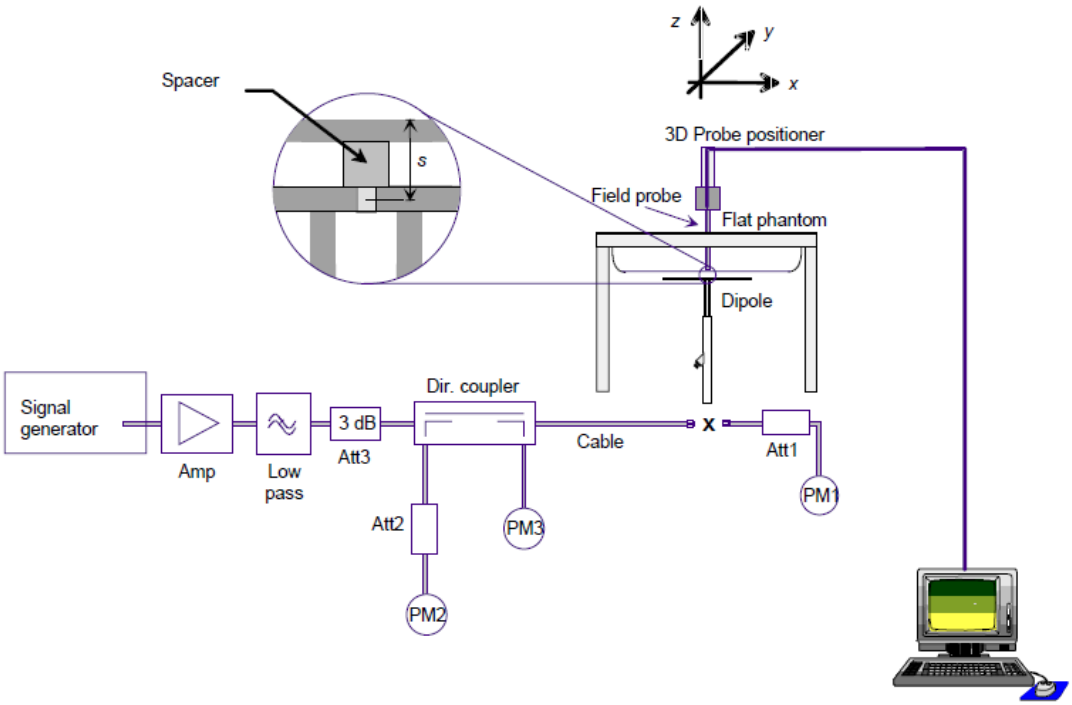

The equipment setup is shown below:

- ✓ Signal Generator
- ✓ Amplifier
- ✓ Directional coupler
- ✓ Power meter
- ✓ Calibrated dipole

First, the power meter PM1 (including attenuator Att1) is connected to the cable to measure the forward power at the location of the connector (x) to the system check source. The signal generator is adjusted for the desired forward power at the connector as read by power meter PM1 after attenuation Att1 and also as coupled through Att2 to PM2. After connecting the cable to the source, the signal generator is readjusted for the same reading at power meter PM2.

SAR results are normalized to a forward power of 1W to compare the values with the calibration reports results as described at IEEE/IEC62209 1528 and IEEE 1528 standards.

A.4.2 Liquid Check

The dielectric parameters check is done prior to the use of the tissue simulating liquid. The verification is made by comparing the relative permittivity and conductivity to the values recommended by the applicable standards.

The liquid verification was performed using the following test setup:

- ✓ VNA (Vector Network Analyzer)
- ✓ Open-Short-Load calibration kit
- ✓ RF Cable
- ✓ Open-Ended Coaxial probe
- ✓ DAK software tool
- ✓ SAR Liquid
- ✓ De-ionized water
- ✓ Thermometer

These are the target dielectric properties of the tissue-equivalent liquid material as defined in FCC OET KDB 865664 D01.

Frequency	Body SAR	
(MHz)	ε_r (F/m)	σ (S/m)
150	61.9	0.80
300	58.2	0.92
450	56.7	0.94
835	55.2	0.97
900	55.0	1.05
1450	54.0	1.30
1800-2000	53.3	1.52
2450	52.7	1.95
3000	52.0	2.73
5800	48.2	6.00

(ε_r = relative permittivity, σ = conductivity and ρ = 1000 kg/m3)

The measurement system implement a SAR error compensation algorithm as documented in IEEE Std 1528-2013 (equivalent to draft standard IEEE P1528-2011) to automatically compensate the measured SAR results for deviations between the measured and required tissue dielectric parameters (applied to only scale up the measured SAR, and not downward) so, according to FCC OET KDB 865664 D01, the tolerance for ε_r and σ may be relaxed to ± 10%.

A.5 Test Equipment List

SAR system #4

ID #	Device	Type/Model	Serial Number	Manufacturer	Cal. Date	Cal. Due Date
086-000	Dosimetric E-field Probe	EX3DV4	7455	SPEAG	2021-03-19	2022-03-19
085-000	Data Acquisition Electronics	DAE4	1517	SPEAG	2021-03-11	2022-03-11
004-000	6-axis Robot	TX90 XL	F11/5JL2A1/A/01	STAÜBLI	N/A	N/A
004-001	Robot Controller	CS8C	F11/5JL2A1/C/01	STAÜBLI	N/A	N/A
004-005	Measurement Server	DASY6 P/N: SE UMS 028 BB	-	SPEAG	N/A	N/A
004-004	Light Beam Unit	SE UKS 030 AA	1030	Di-soric	N/A	N/A
004-002	Oval Flat Phantom	ELI v8.0	2124	SPEAG	N/A	N/A
004-005	Measurement SW	DASY6 6.14.0.0959	9-658E90FA	SPEAG	N/A	N/A
004-010	Laptop Holder	P/N SM LH1 001 CD	-	SPEAG	N/A	N/A

N/A: Not Applicable

Shared equipment

ID #	Device	Type/Model	Serial Number	Manufacturer	Cal. Date	Cal. Due Date
061-000	USB Power Sensor	NRP-Z81	104386	R&S	2020-04-08	2022-04-08
423-000	USB Power Sensor	NRP-Z81	101152	R&S	2020-06-09	2022-06-09
126-000	Vector Signal Generator	ESG E4438C	MY45092885	Agilent	2021-05-27	2023-05-27
198-000	0.8-21GHz RF amplifier	TVA-82-213A	2004003	Mini-Circuits	2021-08-13	2022-02-13
099-000	Liquid measurement SW	DAK-3.5 V2.6.0.5	9-2687B491	SPEAG	N/A	N/A
069-000	Dielectric Probe Kit	DAK-3.5	1037	SPEAG	2019-07-16	2021-07-16
070-000	2450MHz System Validation Dipole	D2450V2	937	SPEAG	2020-05-12	2022-05-12
077-000	Coupler	CD0.5-8-20-30	1251-002	Amd-group	2021-08-13	2022-02-13
078-000	RF Cable	ST-18/SMAm/SMAm/48	1158830	Huber & Suhner	2021-08-13	2022-02-13
079-000	RF Cable	ST-18/SMAm/SMAm/48	1158831	Huber & Suhner	2021-08-13	2022-02-13
141-000	USB Power Sensor	NRP-Z81	104381	R&S	2020-06-03	2022-06-03
084-000	5GHz System Validation Dipole	D5GHzv2	1259	SPEAG	2020-03-10	2022-03-10
339-000	Vector Network Analyzer	ZNB 40	101740	R&S	2020-07-10	2022-07-10
327-000	Temp & Humidity Logger	RA32E-TH1-RAS	RA32-F0DEF9	AVTECH	2021-03-09	2023-03-09

A.5.1 Tissue Simulant Liquid

TSL	Manufacturer / Model	Freq Range (MHz)	Main Ingredients
Body WideBand	SPEAG MBBL600-6000V6 Batch 160630-01	600-6000	Ethanediol, Sodium petroleum sulfonate, Hexylene Glycol / 2-Methyl-pentane-2.4-diol, Alkoxylated alcohol

A.6 Measurement Uncertainty Evaluation

The system uncertainty evaluation is shown in the table below with a coverage factor of k = 2 to indicate a 95% level of confidence:

SPEAG DASY6 Uncertainty Budget According to IEC/IEEE 62209-1528 (4 MHz - 6 GHz) including IEEE 1528-2013 and IEC 62209-1/2016, IEC 62209-2/2010								
Symbol	Error Description	Uncert. Value	Prob Dist.	Div.	(ci) 1g	(ci) 10g	Std Unc. (1g)	Std Unc. (10g)
Measurement System Errors								
CF	*Probe Calibration*	±14.0 %	N	2	1	1	±7.0 %	±7.0 %
CF_{drift}	Probe Calibration Drift	±1.0 %	N	1	1	1	±1.0 %	±1.0 %
LIN	Probe Linearity	±4.7 %	R	√3	1	1	±2.7 %	±2.7 %
BBS	Broadband Signal	±3.0 %	N	2	1	1	±1.5 %	±1.5 %
ISO	*Axial Isotropy*	±4.7 %	R	√3	0.5	0.5	±1.4 %	±1.4 %
ISO	Hemispherical Isotropy	±9.6 %	R	√3	0.5	0.5	±2.8 %	±2.8 %
DAE	Data Acquisition	±0.3 %	N	1	1	1	±0.3 %	±0.3 %
AMB	RF Ambient	±1.8 %	N	1	1	1	±1.8 %	±1.8 %
Δ_{sys}	Probe Positioning	±0.2 %	N	1	0.33	0.33	±0.1 %	±0.1 %
DAT	Data Processing	±2.3 %	N	1	1	1	±2.3 %	±2.3 %
Phantom and Device Errors								
LIQ(σ)	Conductivity (meas.)$_{DAK}$	±2.5 %	N	1	0.78	0.71	±2.0 %	±1.8 %
LIQ(T_σ)	Conductivity (temp.)$_{BB}$	±3.4 %	R	√3	0.78	0.71	±1.5 %	±1.4 %
EPS	Phantom Permittivity	±14.0 %	R	√3	0.25	0.25	±2.0 %	±2.0 %
DAS	Distance DUT - TSL	±2.0 %	N	1	2	2	±4.0 %	±4.0 %
H	Device Holder	±3.6 %	N	1	1	1	±3.6 %	±3.6 %
MOD	DUT Modulation$_m$	±2.4 %	R	√3	1	1	±1.4 %	±1.4 %
TAS	Time-average SAR	±2.6 %	R	√3	1	1	±1.5 %	±1.5 %
RF_{drift}	DUT drift	±5.0 %	N	1	1	1	±2.9 %	±2.9 %
Correction to the SAR results								
C(ε, σ)	Deviation to Target	±1.9 %	N	1	1	0.84	±1.9 %	±1.6 %
Combined Std. Uncertainty							±11.5 %	±11.4 %
Expanded STD Uncertainty							**±23.1 %**	**±22.9 %**

A.7 RF Exposure Limits

SAR assessments have been made in line with the requirements of FCC 47CFR Part 2.1093 and ISED RSS 102 issue 5 on the limitation of exposure of the general population / uncontrolled exposure for portable devices.

Exposure Type	General Population / Uncontrolled Environment
Peak spatial-average SAR (averaged over any 1 gram of tissue)	**1.6 W/kg**
Whole body average SAR	**0.08 W/kg**
Peak spatial-average SAR (extremities) (averaged over any 10 grams of tissue)	**4.0 W/kg**

Annex B. Test Results

The herein test results were performed by:

Test case measurement	Test Personnel
Conducted measurement	A. Dihissou
SAR measurement	A. Dihissou

B.1 Test Conditions

B.1.1 Test SAR Test positions relative to the phantom

The device under test was an Intel® Wi-Fi 6E AX411 card (WLAN module) using a set of Sky-Cross antennas. The card was operated utilizing proprietary software (DRTU version 99.2100.63.0-12409) and each channel was measured using a broadband power meter to determine the maximum average power.

The SAR Test Exclusion Threshold in FCC OET KDB 447498 D01 can be applied to determine SAR test exclusion for adjacent edge configurations. All six sides of the antenna were tested for SAR compliance with the antenna placed at 15mm beneath the phantom. The adjacent edges of the antenna were positioned perpendicular to the phantom.

Considering the antenna location diagrams in Annex F and the test exclusions described before, the surfaces/edges to be measured for each antenna are:

Antenna	Chain A	Main
Position	• Front face • Back Face • Top edge • Bottom edge • Left edge • Right edge	• Front face • Back Face • Top edge • Bottom edge • Left edge • Right edge

See B.*1.3.1* for a more detailed list of the applied reductions.

See *F.2 Test positions* section for more information on the tested positions

B.1.2 Test signal, Output power and Test Frequencies

For 802.11 transmission modes the device was put into operation by using an own control software to program the test mode required to select the continuous transmission with 100% duty cycle.

The output power of the device was set to transmit at maximum power during the tests.

B.1.3 Evaluation Exclusion and Test Reductions

B.1.3.1 SAR evaluation exclusion

The SAR Test Exclusion Threshold in FCC OET KDB 447498 D01 v06 can be applied to determine SAR test exclusion for adjacent edge configurations. For 100MHz to 6GHz and test separation distances ≤50mm, the 1-g and 10-g SAR test exclusion thresholds are determined by the following formula:

$$[(\text{max. power of channel, including tune} - \text{up tolerance, mW})/(\text{min. test separation distance, mm})] \cdot \left[\sqrt{f_{(GHz)}}\right] \leq 3.0 \; for \; 1g \; SAR, and \leq 7.5 \; for \; 10g \; extremity \; SAR \quad (1)$$

Where:

- f(GHz) is the RF channel transmit frequency in GHz
- Power and distance are rounded to the nearest mW and mm before calculation
- The result is rounded to one decimal place for comparison
- The values 3.0 and 7.5 are referred to as numeric thresholds

The test exclusions are applicable only when the minimum test separation distance is ≤ 50 mm, and for transmission frequencies between 100 MHz and 6 GHz. When the minimum test separation distance is < 5 mm, a distance of 5 mm is applied to determine SAR test exclusion.

For test separation distances > 50 mm, the 1-g and 10-g SAR test exclusion thresholds are determined using the following formulas:

$$\langle(Power\ allowed\ at\ numeric\ threshold\ for\ 50\ mm\ in\ (1)) + (test\ separation\ distance - 50\ mm) \cdot (f_{MHz}/150)\rangle mW, \; for\ 100MHz\ to\ 1500MHz \quad (2)$$

$$\langle(Power\ allowed\ at\ numeric\ threshold\ for\ 50\ mm\ in\ (1)) + (test\ separation\ distance - 50\ mm) \cdot 10)\rangle mW, \; for\ 1500MHz\ and\ \leq 6GHz \quad (3)$$

LAN Antenna	Band Name	Output power		Back Face	Top Edge	Right Edge	Left Edge	Bottom Edge	Front Face	Back Face	Top Edge	Right Edge	Left Edge	Bottom Edge	Front Face
		dBm	mW												
WLAN Chain B	DTS	21.0	125.9	**<50**	**<50**	**<50**	**<50**	**<50**	**<50**	T	T	T	T	T	T
	U-NII-1	21.0	125.9	**<50**	**<50**	**<50**	**<50**	**<50**	**<50**	R	R	R	R	R	R
	U-NII-2A	21.0	125.9	**<50**	**<50**	**<50**	**<50**	**<50**	**<50**	T	T	T	T	T	T
	U-NII-2C	21.0	125.9	**<50**	**<50**	**<50**	**<50**	**<50**	**<50**	T	T	T	T	T	T
	U-NII-3	21.0	125.9	**<50**	**<50**	**<50**	**<50**	**<50**	**<50**	T	T	T	T	T	T
WLAN Chain A	DTS	21.0	125.9	**<50**	**<50**	**<50**	**<50**	**<50**	**<50**	T	T	T	T	T	T
	U-NII-1	21.0	125.9	**<50**	**<50**	**<50**	**<50**	**<50**	**<50**	R	R	R	R	R	R
	U-NII-2A	21.0	125.9	**<50**	**<50**	**<50**	**<50**	**<50**	**<50**	T	T	T	T	T	T
	U-NII-2C	21.0	125.9	**<50**	**<50**	**<50**	**<50**	**<50**	**<50**	T	T	T	T	T	T
	U-NII-3	21.0	125.9	**<50**	**<50**	**<50**	**<50**	**<50**	**<50**	T	T	T	T	T	T
	BT	11.5	14.1	**<50**	**<50**	**<50**	**<50**	**<50**	**<50**	T	T	T	T	T	T

T: Tested position
R: Reduced

See Annex *F* for a more detailed explanation of the separation distance related to the platform.

B.1.3.2 General SAR test reduction

According to FCC OET KDB 447498 D01, testing of other required channels within the operating mode of a frequency band is not required when the reported 1-g or 10-g SAR for the mid-band or highest output power channel is:

- ≤ 0.8 W/kg or 2.0 W/kg, for 1-g or 10-g respectively, when the transmission band is ≤ 100 MHz
- ≤ 0.6 W/kg or 1.5 W/kg, for 1-g or 10-g respectively, when the transmission band is between 100 MHz and 200 MHz
- ≤ 0.4 W/kg or 1.0 W/kg, for 1-g or 10-g respectively, when the transmission band is ≥ 200 MHz

WLAN SAR Test reduction

Transmission Mode	SAR test exclusion/reduction
DSSS	According to FCC OET KDB 248227 D01, SAR is measured for 2.4 GHz 802.11b, SAR test reduction is determined according to the following: ▪ When the reported SAR of the highest measured maximum output power channel for the exposure configuration is ≤ 0.8 W/kg, no further SAR testing is required for 802.11b DSSS in that exposure configuration. ▪ When the reported SAR is > 0.8 W/kg, SAR is required for that exposure configuration using the next highest measured output power channel. When any reported SAR is > 1.2 W/kg, SAR is required for the third channel. According to FCC OET KDB 248227 D01, SAR is not required for 2.4 GHz OFDM conditions when the highest reported SAR for DSSS is adjusted by the ratio of OFDM to DSSS specified maximum output power and the adjusted SAR is ≤ 1.2 W/kg.
OFDM	According to FCC OET KDB 248227 D01, 802.11a/g/n/ac modes have the same specified maximum output power, largest channel bandwidth, lowest order modulation and lowest data rate, the lowest order 802.11 mode is selected; i.e., 802.11a is chosen over 802.11n then 802.11ac or 802.11g is chosen over 802.11n. According to FCC OET KDB 248227 D01, an *initial test configuration* is determined for OFDM and DSSS transmission modes according to the channel bandwidth, modulation and data rate combination(s) with the highest maximum output power specified for production units in each standalone and aggregated frequency band. SAR is measured using the highest measured maximum output power channel. SAR test reduction for subsequent highest output test channels is determined according to reported SAR of the initial test configuration. The *initial test configuration* for 5 GHz OFDM transmission modes is determined by the 802.11 configuration with the highest maximum output power specified for production units, including tune-up tolerance, in each standalone and aggregated frequency band. SAR for the initial test configuration is measured using the highest maximum output power channel determined by the default power measurement procedures. According to FCC OET KDB 248227 D01, when the reported SAR of the initial test configuration is > 0.8 W/kg, SAR measurement is required for subsequent next highest measured output power channel(s) in the initial test configuration until reported SAR is ≤ 1.2 W/kg or all required channels are tested.

B.2 Conducted Power Measurements

B.2.1 WLAN 2.4GHz

					Chain A		Chain B		SAR Test?
Band	Mode	Data Rate	Ch #	Freq (MHz)	Avg Pwr (dBm)	Tune-up Pwr (dBm)	Avg Pwr (dBm)	Tune-up Pwr (dBm)	
2.4GHz (DTS)	802.11b	1Mbps	1	2412	NR[1]	18.75	NR[1]	19.75	No
			6	2437		18.75		19.75	
			11	2462		19.25		20.00	
	802.11g	6Mbps	1	2412	17.70	17.75	17.45	17.50	No[3]
			6	2437	20.92	21.00	20.97	21.00	Yes
			11	2462	18.50	18.50	17.50	17.50	No[3]
	802.11n20	HT0	1	2412	NR[1]	17.75	NR[1]	17.50	No[2]
			6	2437		21.00		21.00	
			11	2462		18.50		17.50	
	802.11ax20	HE0	1	2412		17.75		17.50	
			6	2437		21.00		21.00	
			11	2462		18.50		17.50	
	802.11n40	HT0	3	2422		17.00		16.50	
			6	2437		17.25		18.25	
			9	2452		10.75		11.00	
	802.11ax40	HE0	3	2422		17.00		16.50	
			6	2437		17.25		18.25	
			9	2452		10.75		11.00	

Initial test configuration

1. NR: Not Required
2. As per FCC OET KDB 248227 D01, conducted output power and SAR testing are not required for 802.11g/n/ax channels when the highest reported SAR for DSSS is adjusted by the ratio of OFDM to DSSS specified maximum output power and the adjusted SAR is ≤ 1.2W/kg.
3. When the reported SAR of the initial test configuration is > 0.8 W/kg, SAR measurement is required for subsequent next highest measured output power channel(s) in the initial test configuration until reported SAR is ≤ 1.2 W/kg or all required channels are tested.

B.2.2 WLAN 5GHz (U-NII)

B.2.2.1 5.2GHz and 5.3GHz (U-NII-1 and U-NII-2A)

					Chain A		Chain B		SAR Test?
Band	Mode	Data Rate	Ch #	Freq (MHz)	Avg Pwr (dBm)	Tune-up Pwr (dBm)	Avg Pwr (dBm)	Tune-up Pwr (dBm)	
5.2GHz (U-NII-1)	802.11 a	6Mbps	36	5180	NR[1,3]	19.50	NR[1,3]	19.75	No[2]
			40	5200		21.00		21.00	
			44	5220		21.00		21.00	
			48	5240		21.00		21.00	
	802.11 n20	HT0	36	5180		19.50		19.75	
			40	5200		21.00		21.00	
			44	5220		21.00		21.00	
			48	5240		21.00		21.00	
	802.11 ax20	HE0	36	5180		19.50		19.75	
			40	5200		21.00		21.00	
			44	5220		21.00		21.00	
			48	5240		21.00		21.00	
	802.11 n40	HT0	38	5190		17.50		18.00	
			46	5230		20.50		20.50	
	802.11 ax40	HE0	38	5190		17.50		18.00	
			46	5230		20.50		20.50	
	802.11 ac80	VHT0	42	5210		17.25		17.25	
	802.11 ax80	HE0	42	5210		17.25		17.25	

Initial test configuration

1. NR: Not Required
2. When the same maximum output power is specified for both bands, begin SAR measurement in U-NII-2A band by applying the OFDM SAR requirements. If the highest reported SAR for a test configuration is ≤ 1.2 W/kg, SAR is not required for U-NII-1 band (see §B.5.2 in this document).
3. Additional conducted power measurement is required when reported SAR is > 1.2W/kg. In case the subsequent test configuration and the channel bandwidth is smaller than the initial test configuration, all channels that overlap with the larger channel bandwidth in the initial configuration should be tested.
4. The initial test configuration for 2.4 GHz and 5 GHz OFDM transmission modes is determined by the 802.11 configuration with the highest maximum output power specified for production units, including tune-up tolerance, in each standalone and aggregated frequency band. SAR for the initial test configuration is measured using the highest maximum output power channel determined by the default power measurement procedures. When multiple transmission modes (802.11a/g/n/ac/ax) have the same specified maximum output power, largest channel bandwidth, lowest order modulation and lowest data rate, lowest order 802.11 mode is selected (i.e. a, g, n, ac)
5. When the reported SAR of the initial test configuration is > 0.8W/kg, SAR measurement is required for the subsequent next highest measured output power channel(s) in the initial test configuration until reported SAR is =1.2W/kg or all required channels are tested.
6. When the highest reported SAR for the initial test configuration (when applicable, include subsequent highest output channels), according to the initial test position or fixed exposure requirements, is adjusted by the ratio of the subsequent test configuration to the initial test configuration specified maximum output power and the adjusted SAR is ≤1.2 W/Kg, SAR is not required for that subsequent test configuration
7. SAR for subsequent highest measured maximum output power channels in the subsequent test configuration is required only when the reported SAR of the preceding higher maximum output power channel(s) in the subsequent test configuration is >1.2 W/Kg or until all required channels are tested.

					Chain A		Chain B		SAR Test?
Band	Mode	Data Rate	Ch #	Freq (MHz)	Avg Pwr (dBm)	Tune-up Pwr (dBm)	Avg Pwr (dBm)	Tune-up Pwr (dBm)	
5.3GHz (U-NII-2A)	802.11a	6Mbps	52	5260	NR[1,3]	21.00	NR[1,3]	21.00	No[2,5]
			56	5280		21.00		21.00	
			60	5300		21.00		21.00	
			64	5320		19.75		19.50	
	802.11n20	HT0	52	5260		21.00		21.00	
			56	5280		21.00		21.00	
			60	5300		21.00		21.00	
			64	5320		19.75		19.50	
	802.11ax20	HE0	52	5260	20.71	21.00		21.00	No
			56	5280	20.87	21.00		21.00	Yes
			60	5300	20.64	21.00		21.00	No
			64	5320	19.60	19.75		19.50	No
	802.11n40	HT0	54	5270	NR[1,3]	20.75		21.00	No[2,5]
			62	5310		17.75		17.50	
	802.11ax40	HE0	54	5270		20.75	20.74	21.00	Yes
			62	5310		17.75	17.36	17.50	No
	802.11ac80	VHT0	58	5290		17.75	NR[1,3]	17.75	No[2,5]
	802.11ax80	HE0	58	5290		17.75		17.75	
	802.11ac160	VHT0	50	5250		14.50		14.50	
	802.11ax160	HE0	50	5250		14.50		14.50	

Initial test configuration

1. NR: Not Required
2. The initial test configuration for 2.4 GHz and 5 GHz OFDM transmission modes is determined by the 802.11 configuration with the highest maximum output power specified for production units, including tune-up tolerance, in each standalone and aggregated frequency band. SAR for the initial test configuration is measured using the highest maximum output power channel determined by the default power measurement procedures. When multiple transmission modes (802.11a/g/n/ac/ax) have the same specified maximum output power, largest channel bandwidth, lowest order modulation and lowest data rate, lowest order 802.11 mode is selected (i.e. a, g, n, ac)
3. Additional conducted power measurement is required when reported SAR is > 1.2W/kg. In case the subsequent test configuration and the channel bandwidth is smaller than the initial test configuration, all channels that overlap with the larger channel bandwidth in the initial configuration should be tested. For modes with the same maximum output power, the guidance from section 5.3.2 a) of FCC KDB Publication 248227 D01 should be applied, with 802.11ax being considered as the highest 802.11 mode for the appropriate frequency bands.
4. When the reported SAR of the initial test configuration is > 0.8W/kg, SAR measurement is required for the subsequent next highest measured output power channel(s) in the initial test configuration until reported SAR is ≤1.2W/kg or all required channels are tested.
5. When the highest reported SAR for the initial test configuration (when applicable, include subsequent highest output channels), according to the initial test position or fixed exposure requirements, is adjusted by the ratio of the subsequent test configuration to the initial test configuration specified maximum output power and the adjusted SAR is ≤1.2 W/Kg, SAR is not required for that subsequent test configuration.
6. SAR for subsequent highest measured maximum output power channels in the subsequent test configuration is required only when the reported SAR of the preceding higher maximum output power channel(s) in the subsequent test configuration is >1.2 W/Kg or until all required channels are tested.

B.2.2.2 5.6 (U-NII-2C)

Band	Mode	Data Rate	Ch #	Freq (MHz)	Chain A Avg Pwr (dBm)	Chain A Tune-up Pwr (dBm)	Chain B Avg Pwr (dBm)	Chain B Tune-up Pwr (dBm)	SAR Test?
5.6GHz (U-NII-2C)	802.11a	6Mbps	100	5500	NR[1,3]	20.50	NR[1,3]	20.25	No[4,6]
			104	5520		21.00		21.00	
			108	5540		21.00		21.00	
			112	5560		21.00		21.00	
			116	5580		21.00		21.00	
			120	5600		21.00		21.00	
			124	5620		21.00		21.00	
			128	5640		21.00		21.00	
	802.11n20	HT0	100	5500		20.50		20.25	
			104	5520		21.00		21.00	
			108	5540		21.00		21.00	
			112	5560		21.00		21.00	
			116	5580		21.00		21.00	
			120	5600		21.00		21.00	
			124	5620		21.00		21.00	
			128	5640		21.00		21.00	
	802.11ax20	HE0	100	5500		20.50		20.25	
			104	5520		21.00		21.00	
			108	5540		21.00		21.00	
			112	5560		21.00		21.00	
			116	5580		21.00		21.00	
			120	5600		21.00		21.00	
			124	5620		21.00		21.00	
			128	5640		21.00		21.00	
	802.11n40	HT0	102	5510		18.75		18.75	
			110	5550		21.00		21.00	
			118	5590		21.00		21.00	
			126	5630		21.00		21.00	
	802.11ax40	HE0	102	5510		18.75		18.75	
			110	5550		21.00		21.00	
			118	5590		21.00		21.00	
			126	5630		21.00		21.00	
	802.11ac80	VHT0	106	5530		18.50		18.50	
			122	5610		21.00		21.00	
	802.11ax80	HE0	106	5530	18.37	18.50	18.20	18.50	No
			122	5610	20.84	21.00	20.68	21.00	Yes
	802.11ac160	VHT0	114	5570	NR[1,3]	15.75	NR[1,3]	15.75	No[4,6]
	802.11ax160	HE0	114	5570		15.75		15.75	

Initial test configuration

1. NR: Not Required
2. When band gap channels between U-NII-2C and U-NII-3 band are supported channels in U-NII-2C band below 5.65 GHz are considered as one band and channels above 5.65 GHz, together with channels in 5.8 GHz U-NII-3 or §15.247 band, are considered as a separate band
3. Additional conducted power measurement is required when reported SAR is > 1.2W/kg. In case the subsequent test configuration and the channel bandwidth is smaller than the initial test configuration, all channels that overlap with the larger channel bandwidth in the initial configuration should be tested

4. The initial test configuration for 2.4 GHz and 5 GHz OFDM transmission modes is determined by the 802.11 configuration with the highest maximum output power specified for production units, including tune-up tolerance, in each standalone and aggregated frequency band. SAR for the initial test configuration is measured using the highest maximum output power channel determined by the default power measurement procedures. When multiple transmission modes (802.11a/g/n/ac/ax) have the same specified maximum output power, largest channel bandwidth, lowest order modulation and lowest data rate, lowest order 802.11 mode is selected (i.e. a, g, n, ac)
5. When the reported SAR of the initial test configuration is > 0.8W/kg, SAR measurement is required for the subsequent next highest measured output power channel(s) in the initial test configuration until reported SAR is ≤1.2W/kg or all required channels are tested.
6. When the highest reported SAR for the initial test configuration (when applicable, include subsequent highest output channels), according to the initial test position or fixed exposure requirements, is adjusted by the ratio of the subsequent test configuration to the initial test configuration specified maximum output power and the adjusted SAR is≤1.2 W/Kg, SAR is not required for that subsequent test configuration.
7. SAR for subsequent highest measured maximum output power channels in the subsequent test configuration is required only when the reported SAR of the preceding higher maximum output power channel(s) in the subsequent test configuration is >1.2 W/Kg or until all required channels are tested.

B.2.2.3 5.8GHz (U-NII-3)

Band	Mode	Data Rate	Ch #	Freq (MHz)	Chain A Avg Pwr (dBm)	Chain A Tune-up Pwr (dBm)	Chain B Avg Pwr (dBm)	Chain B Tune-up Pwr (dBm)	SAR Test?
5.6-5.8GHz (U-NII-3)	802.11a	6Mbps	132	5660	NR[1]	21.00	NR[1]	21.00	No[4,6]
			136	5680		21.00		21.00	
			140	5700		21.00		21.00	
			149	5745		21.00		21.00	
			153	5765		21.00		21.00	
			157	5785		21.00		21.00	
			161	5805		21.00		21.00	
			165	5825		21.00		21.00	
	802.11n20	HT0	132	5660		21.00		21.00	
			136	5680		21.00		21.00	
			140	5700		21.00		21.00	
			149	5745		21.00		21.00	
			153	5765		21.00		21.00	
			157	5785		21.00		21.00	
			161	5805		21.00		21.00	
			165	5825		21.00		21.00	
	802.11ax20	HE0	132	5660		21.00		21.00	
			136	5680		21.00		21.00	
			140	5700		21.00		21.00	
			149	5745		21.00		21.00	
			153	5765		21.00		21.00	
			157	5785		21.00		21.00	
			161	5805		21.00		21.00	
			165	5825		21.00		21.00	
	802.11n40	HT0	134	5670		21.00		21.00	
			142	5710		21.00		21.00	
			151	5755		21.00		21.00	
			159	5795		21.00		21.00	
	802.11ax40	HE0	134	5670		21.00		21.00	
			142	5710		21.00		21.00	
			151	5755		21.00		21.00	
			159	5795		21.00		21.00	
	802.11ac80	VHT0	138	5690		21.00		21.00	
			155	5775		20.00		20.50	
	802.11ax80	HE0	138	5690	20.78	21.00	20.74	21.00	Yes
			155	5775	19.86	20.00	20.30	20.50	No[5]

Initial test configuration

1. NR: Not Required
2. When band gap channels between U-NII-2C and U-NII-3 band are supported channels in U-NII-2C band below 5.65 GHz are considered as one band and channels above 5.65 GHz, together with channels in 5.8 GHz U-NII-3 or §15.247 band, are considered as a separate band
3. Additional conducted power measurement is required when reported SAR is > 1.2W/kg. In case the subsequent test configuration and the channel bandwidth is smaller than the initial test configuration, all channels that overlap with the larger channel bandwidth in the initial configuration should be tested
4. The initial test configuration for 2.4 GHz and 5 GHz OFDM transmission modes is determined by the 802.11 configuration with the highest maximum output power specified for production units, including tune-up tolerance, in each standalone and aggregated frequency band. SAR for the initial test configuration is measured using the highest maximum output power channel determined by the default power measurement procedures. When multiple transmission modes (802.11a/g/n/ac) have the same specified maximum output power, largest channel bandwidth, lowest order modulation and lowest data rate, lowest order 802.11 mode is selected (i.e. a, g, n, ac)
5. When the reported SAR of the initial test configuration is > 0.8W/kg, SAR measurement is required for the subsequent next highest measured output power channel(s) in the initial test configuration until reported SAR is ≤1.2W/kg or all required channels are tested.

6. When the highest reported SAR for the initial test configuration (when applicable, include subsequent highest output channels), according to the initial test position or fixed exposure requirements, is adjusted by the ratio of the subsequent test configuration to the initial test configuration specified maximum output power and the adjusted SAR is ≤1.2 W/Kg, SAR is not required for that subsequent test configuration.
7. SAR for subsequent highest measured maximum output power channels in the subsequent test configuration is required only when the reported SAR of the preceding higher maximum output power channel(s) in the subsequent test configuration is >1.2 W/Kg or until all required channels are tested.

B.2.3 Bluetooth

Band	Mode	Data Rate	Channel	Frequency (MHz)	Antenna	Avg Pwr (dBm)	Tune-up Pwr (dBm)
2.4GHz	Bluetooth v5.2	Basic rate GFSK	0	2402	Chain A	10.47	11.50
			39	2441		10.57	11.50
			78	2480		10.20	11.50
	Bluetooth V5.2	Basic rate π/4 DQPSK	0	2402		NR[1]	11.00
			39	2441			11.00
			78	2480			11.00
	Bluetooth v5.2	Basic rate 8-DPSK	0	2402			11.00
			39	2441			11.00
			78	2480			11.00
	Bluetooth v5.2	Low energy GFSK	0	2412			9.00
			20	2442			9.00
			39	2480			9.00

Initial test configuration

1. NR: Not Required

B.3 Tissue Parameters Measurement

Body TSL

Freq. (MHz)	Target Parameters		Measured TSL Parameters		Deviation (%)		Date
	ε' (F/m)	σ (S/m)	ε' (F/m)	σ (S/m)	ε'	σ	
2450.0	52.7	1.95	54.08	1.95	2.62	0.0	2021-08-16
5300.0	48.88	5.42	49.78	5.72	1.84	5.54	
5600.0	48.47	5.77	48.71	6.22	0.5	7.8	

See *Annex D* for more details

B.4 System Check Measurements

Body Measurements

Frequency (MHz)	Average	Target SAR (W/Kg)	Measured SAR (W/Kg)	Deviation to target (%)	Limit (%)	Date
2450	1g	49.40	44.60	-8.23	±10	2021-08-17
	10g	23.40	21.00	-8.70		
5300	1g	75.60	69.60	-7.32		2021-08-16
	10g	21.20	19.74	-5.10		
5600	1g	78.20	80.00	2.04		2021-08-17
	10g	21.70	23.00	6.98		

See *Annex C* for more details.

B.5 SAR Test Results

B.5.1 802.11b/g/n/ax – DTS/ Bluetooth – 2.4GHz - DSS

Ant.	Mode Data rate	BW (MHz)	Ch #	Freq (MHz)	Position	Correct. Factor (dB)	SAR 1g (W/kg)	Reported SAR 1g (W/kg)	
Chain A	802.11g 6Mbps	20	6	2437	Front face	0.08	0.23	0.24	
					Back Face	0.08	0.36	0.37	**1**
					Top edge	0.08	0.09	0.10	
					Bottom edge	0.08	0.09	0.10	
					Left edge	0.08	0.17	0.17	
					Right edge	0.08	0.07	0.07	
	802.15 DH5	1	39	2441	Front face	0.93	0.01	0.01	
					Back Face	0.93	0.02	0.02	
					Top edge	0.93	0.03	0.03	
					Bottom edge	0.93	0.00	0.00	
					Left edge	0.93	0.00	0.01	
					Right edge	0.93	0.00	0.01	
Chain B	802.11g 6Mbps	20	6	2437	Front face	0.03	0.27	0.27	
					Back Face	0.03	0.27	0.28	
					Top edge	0.03	0.10	0.10	
					Bottom edge	0.03	0.09	0.09	
					Left edge	0.03	0.16	0.16	
					Right edge	0.03	0.09	0.09	

B.5.2 802.11a/n/ac/ax– U-NII-2A

Ant.	Mode Data rate	BW (MHz)	Ch #	Freq (MHz)	Position	Correct. Factor (dB)	SAR 1g (W/kg)	Reported SAR 1g (W/kg)	Plot #
Chain A	802.11a x HE0	20	56	5280	Front face	0.13	0.35	0.36	
					Back Face	0.13	0.42	0.44	
					Top edge	0.13	0.32	0.33	
					Bottom edge	0.13	0.25	0.26	
					Left edge	0.13	0.57	0.58	**2**
					Right edge	0.13	0.05	0.05	
Chain B	802.11a x HE0	40	54	5270	Front face	0.26	0.35	0.37	
					Back Face	0.26	0.42	0.44	
					Top edge	0.26	0.36	0.38	
					Bottom edge	0.26	0.31	0.33	
					Left edge	0.26	0.44	0.47	
					Right edge	0.26	0.06	0.06	

B.5.3 802.11a/n/ac/ax– U-NII-2C

Ant.	Mode Data rate	BW (MHz)	Ch #	Freq (MHz)	Position	Correct. Factor (dB)	SAR 1g (W/kg)	Reported SAR 1g (W/kg)	Plot #
Chain A	802.11ax HE0	80	122	5610	Front face	0.16	0.31	0.32	**3**
					Back Face	0.16	0.22	0.23	
					Top edge	0.16	0.24	0.25	
					Bottom edge	0.16	0.17	0.18	
					Left edge	0.16	0.25	0.26	
					Right edge	0.16	0.04	0.04	
Chain B	802.11ax HE0	80	122	5610	Front face	0.32	0.28	0.30	
					Back Face	0.32	0.18	0.20	
					Top edge	0.32	0.24	0.25	
					Bottom edge	0.32	0.11	0.12	
					Left edge	0.32	0.20	0.21	
					Right edge	0.32	0.03	0.04	

B.5.4 802.11a/n/ac/ax– U-NII-3

Ant.	Mode Data rate	BW (MHz)	Ch #	Freq (MHz)	Position	Correct. Factor (dB)	SAR 1g (W/kg)	Reported SAR 1g (W/kg)	Plot #
Chain A	802.11ax HE0	80	138	5690	Front face	0.22	0.25	0.26	
					Back Face	0.22	0.18	0.19	
					Top edge	0.22	0.16	0.17	
					Bottom edge	0.22	0.12	0.13	
					Left edge	0.22	0.16	0.17	
					Right edge	0.22	0.02	0.02	
Chain B	802.11ax HE0	80	138	5690	Front face	0.26	0.26	0.27	**4**
					Back Face	0.26	0.16	0.17	
					Top edge	0.26	0.20	0.21	
					Bottom edge	0.26	0.11	0.12	
					Left edge	0.26	0.17	0.18	
					Right edge	0.26	0.03	0.04	

B.5.5 SAR Measurement Variability

According to FCC OET KDB 865664, SAR Measurement variability is assessed when the maximum initial measured SAR is >=0.8 W/kg for a certain band/mode.

As all measured SAR results are below 0.8W/kg, therefore SAR variability is not required.

B.5.6 Simultaneous Transmission SAR Evaluation

According to FCC OET KDB 447498 D01, when the sum of 1g SAR for all simultaneously transmitting antennas in an operating mode and exposure condition combination is within the SAR limit, SAR test exclusion applies to that simultaneous transmission configuration.

All the values stated in the table below are the worst case found for standalone measurement with disregard of the transmission mode or channel where the worst case was found

Antenna	Position	Highest Reported SAR (1g) (W/Kg)		
		WLAN 2.4GHz	WLAN 5GHz	Bluetooth
Chain A	Left Edge	0.17	0.58	0.01
	Front Face	0.24	0.36	0.01
	Back Face	0.37	0.44	0.03
	Top Edge	0.10	0.33	0.00
	Bottom Edge	0.10	0.26	0.01
	Right Edge	0.07	0.05	0.01
Chain B	Left Edge	0.16	0.47	
	Front Face	0.27	0.37	
	Back Face	0.28	0.44	
	Top Edge	0.10	0.38	
	Bottom Edge	0.09	0.33	
	Right Edge	0.09	0.06	

Position	Simultaneous Tx Antenna Combination		Σ SAR 1g (W/kg)	Limit (W/kg)
	Chain A	Chain B		
Single Band Mode				
Left Edge	WLAN 5GHz	WLAN 5GHz	1.05	1.6
	WLAN 5GHz + BT	WLAN 5GHz	1.06	
	BT	WLAN 5GHz	0.48	
	WLAN 2.4GHz	WLAN 2.4GHz	0.33	
	BT	WLAN 2.4GHz	0.17	
CDB Mode				
Left Edge	BT	WLAN 2.4GHz + 5GHz	0.64	1.6
	-	WLAN 2.4GHz + 5GHz	0.63	
	WLAN 2.4GHz + 5GHz	-	0.75	
	WLAN 2.4GHz + 5GHz	WLAN 2.4GHz + 5GHz	1.38	
	WLAN 5GHz +BT	WLAN 2.4GHz	0.75	
Single Band Mode				
Front Face	WLAN 5GHz	WLAN 5GHz	0.73	1.6
	WLAN 5GHz + BT	WLAN 5GHz	0.75	
	BT	WLAN 5GHz	0.39	
	WLAN 2.4GHz	WLAN 2.4GHz	0.51	
	BT	WLAN 2.4GHz	0.29	
CDB Mode				
Front Face	BT	WLAN 2.4GHz + 5GHz	0.66	1.6
	-	WLAN 2.4GHz + 5GHz	0.64	
	WLAN 2.4GHz + 5GHz	-	0.60	
	WLAN 2.4GHz + 5GHz	WLAN 2.4GHz + 5GHz	1.24	
	WLAN 5GHz +BT	WLAN 2.4GHz	0.65	

Single Band Mode				
Back Face	WLAN 5GHz	WLAN 5GHz	0.88	1.6
	WLAN 5GHz + BT	WLAN 5GHz	0.91	
	BT	WLAN 5GHz	0.47	
	WLAN 2.4GHz	WLAN 2.4GHz	0.65	
	BT	WLAN 2.4GHz	0.31	
CDB Mode				
Back Face	BT	WLAN 2.4GHz + 5GHz	0.75	1.6
	-	WLAN 2.4GHz + 5GHz	0.72	
	WLAN 2.4GHz + 5GHz	-	0.81	
	WLAN 2.4GHz + 5GHz	WLAN 2.4GHz + 5GHz	1.53	
	WLAN 5GHz +BT	WLAN 2.4GHz	0.75	
Single Band Mode				
Top Edge	WLAN 5GHz	WLAN 5GHz	0.71	1.6
	WLAN 5GHz + BT	WLAN 5GHz	0.71	
	BT	WLAN 5GHz	0.38	
	WLAN 2.4GHz	WLAN 2.4GHz	0.20	
	BT	WLAN 2.4GHz	0.10	
CDB Mode				
Top Edge	BT	WLAN 2.4GHz + 5GHz	0.48	1.6
	-	WLAN 2.4GHz + 5GHz	0.48	
	WLAN 2.4GHz + 5GHz	-	0.43	
	WLAN 2.4GHz + 5GHz	WLAN 2.4GHz + 5GHz	0.91	
	WLAN 5GHz +BT	WLAN 2.4GHz	0.43	
Single Band Mode				
Bottom Edge	WLAN 5GHz	WLAN 5GHz	0.59	1.6
	WLAN 5GHz + BT	WLAN 5GHz	0.60	
	BT	WLAN 5GHz	0.34	
	WLAN 2.4GHz	WLAN 2.4GHz	0.19	
	BT	WLAN 2.4GHz	0.10	
CDB Mode				
Bottom Edge	BT	WLAN 2.4GHz + 5GHz	0.43	1.6
	-	WLAN 2.4GHz + 5GHz	0.42	
	WLAN 2.4GHz + 5GHz	-	0.36	
	WLAN 2.4GHz + 5GHz	WLAN 2.4GHz + 5GHz	0.78	
	WLAN 5GHz +BT	WLAN 2.4GHz	0.36	
Single Band Mode				
Right Edge	WLAN 5GHz	WLAN 5GHz	0.11	1.6
	WLAN 5GHz + BT	WLAN 5GHz	0.12	
	BT	WLAN 5GHz	0.07	
	WLAN 2.4GHz	WLAN 2.4GHz	0.16	
	BT	WLAN 2.4GHz	0.10	
CDB Mode				
Right Edge	BT	WLAN 2.4GHz + 5GHz	0.16	1.6
	-	WLAN 2.4GHz + 5GHz	0.15	
	WLAN 2.4GHz + 5GHz	-	0.12	
	WLAN 2.4GHz + 5GHz	WLAN 2.4GHz + 5GHz	0.27	
	WLAN 5GHz +BT	WLAN 2.4GHz	0.15	

Considering the results described above and according to the simultaneous transmission SAR test exclusion considerations described in FCC OET KDB 447498 D01, no SAR to Peak Location Separation Ratio is required.

Annex C. Test System Plots

1. DTS - 802.11g, CH6, Chain A – Position Back Face 39
2. U-NII-2A - 802.11ax20, CH56, Chain A – Position Left Edge 40
3. U-NII-2C - 802.11ax80, CH122, Chain A – Position Front Face 41
4. U-NII-3 - 802.11ax80, CH138, Chain B– Position Front Face 42
5. System Check Body Liquid 2450MHz 43
6. System Check Body Liquid 5300MHz 44
7. System Check Body Liquid 5600MHz 45

1. DTS - 802.11g, CH6, Chain A – Position Back Face

Device under Test Properties

Model, Manufacturer	Dimensions [mm]	IMEI	DUT Type
AX411E2W, Intel	40.0 x 75.0 x 8.0	WFM: 3413E8F11F3A	WLAN module + Reference antenna

Exposure Conditions

Phantom Section, TSL	Position, Test Distance [mm]	Band	Group, UID	Frequency [MHz], Channel Number	Conversion Factor	TSL Conductivity [S/m]	TSL Permittivity
Flat, MSL	BACK, 15.00	WLAN 2.4GHz	WLAN, 10416-AAA	2437.0, 6	7.37	1.94	54.1

Hardware Setup

Phantom	TSL, Measured Date	Probe, Calibration Date	DAE, Calibration Date
ELI V8.0 (20deg probe tilt) -	MBBL-600-6000, 2021-Aug-16	EX3DV4 - SN7455, 2021-03-19	DAE4 Sn1517, 2021-03-11

Scan Setup

	Area Scan	Zoom Scan
Grid Extents [mm]	120.0 x 80.0	30.0 x 30.0 x 30.0
Grid Steps [mm]	10.0 x 10.0	5.0 x 5.0 x 1.5
Sensor Surface [mm]	3.0	1.4
Graded Grid	No	Yes
Grading Ratio	n/a	1.5
MAIA	Confirmed by MAIA	Confirmed by MAIA
Surface Detection	VMS + 6p	VMS + 6p
Scan Method	Measured	Measured

Measurement Results

	Area Scan	Zoom Scan
Date	2021-08-17, 13:38	2021-08-17, 13:47
psSAR1g [W/Kg]	0.360	0.362
psSAR10g [W/Kg]	0.192	0.197
Power Drift [dB]	-0.02	0.01
Power Scaling Scaling Factor [dB]	Disabled	Disabled
TSL Correction	Positive Only	Positive Only
M2/M1 [%]		82.9
Dist 3dB Peak [mm]		16.2

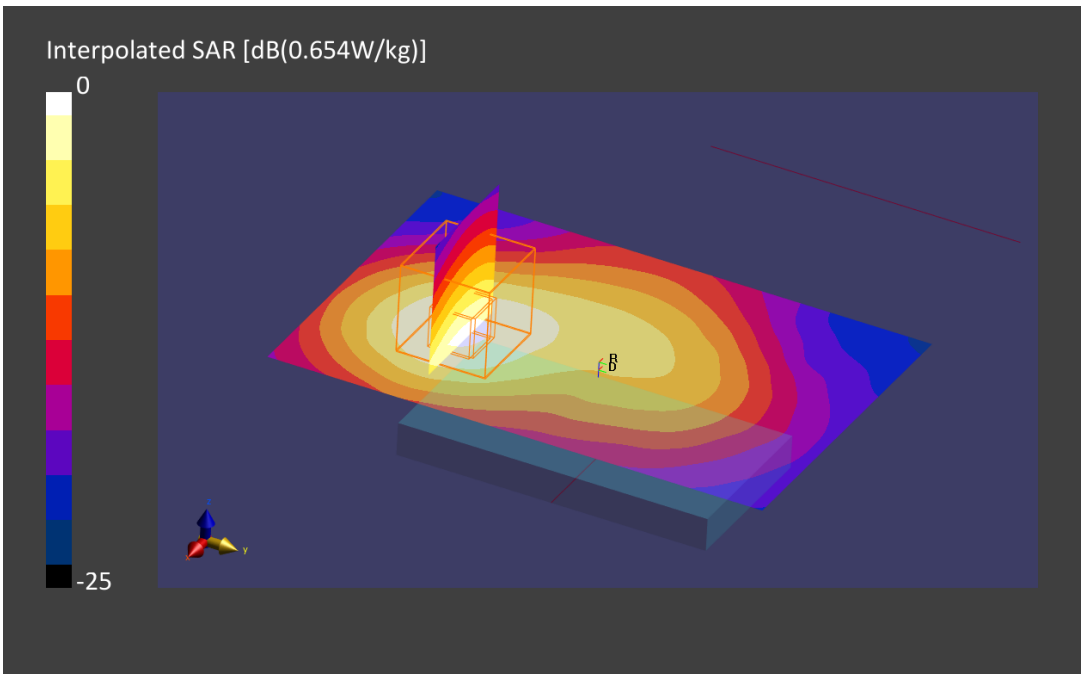

2. U-NII-2A - 802.11ax20, CH56, Chain A – Position Left Edge

Device under Test Properties

Model, Manufacturer	Dimensions [mm]	IMEI	DUT Type
AX411E2W, Intel	40.0 x 75.0 x 8.0	WFM: 3413E8F11F3A	WLAN module + Reference antenna

Exposure Conditions

Phantom Section, TSL	Position, Test Distance [mm]	Band	Group, UID	Frequency [MHz], Channel Number	Conversion Factor	TSL Conductivity [S/m]	TSL Permittivity
Flat, MSL	EDGE LEFT, 15.00	WLAN 5GHz	WLAN, 10525-AAC	5280.0, 56	4.49	5.69	49.8

Hardware Setup

Phantom	TSL, Measured Date	Probe, Calibration Date	DAE, Calibration Date
ELI V8.0 (20deg probe tilt) -	MBBL-600-6000, 2021-Aug-16	EX3DV4 - SN7455, 2021-03-19	DAE4 Sn1517, 2021-03-11

Scan Setup

	Area Scan	Zoom Scan
Grid Extents [mm]	80.0 x 100.0	22.0 x 22.0 x 22.0
Grid Steps [mm]	8.0 x 10.0	4.0 x 4.0 x 1.4
Sensor Surface [mm]	3.0	1.4
Graded Grid	No	Yes
Grading Ratio	n/a	1.5
MAIA	Confirmed by MAIA	Confirmed by MAIA
Surface Detection	VMS + 6p	VMS + 6p
Scan Method	Measured	Measured

Measurement Results

	Area Scan	Zoom Scan
Date	2021-08-16, 14:03	2021-08-16, 14:12
psSAR1g [W/Kg]	0.547	0.565
psSAR10g [W/Kg]	0.235	0.241
Power Drift [dB]	0.07	-0.16
Power Scaling Scaling Factor [dB]	Disabled	Disabled
TSL Correction	Positive Only	Positive Only
M2/M1 [%]		65.9
Dist 3dB Peak [mm]		17.5

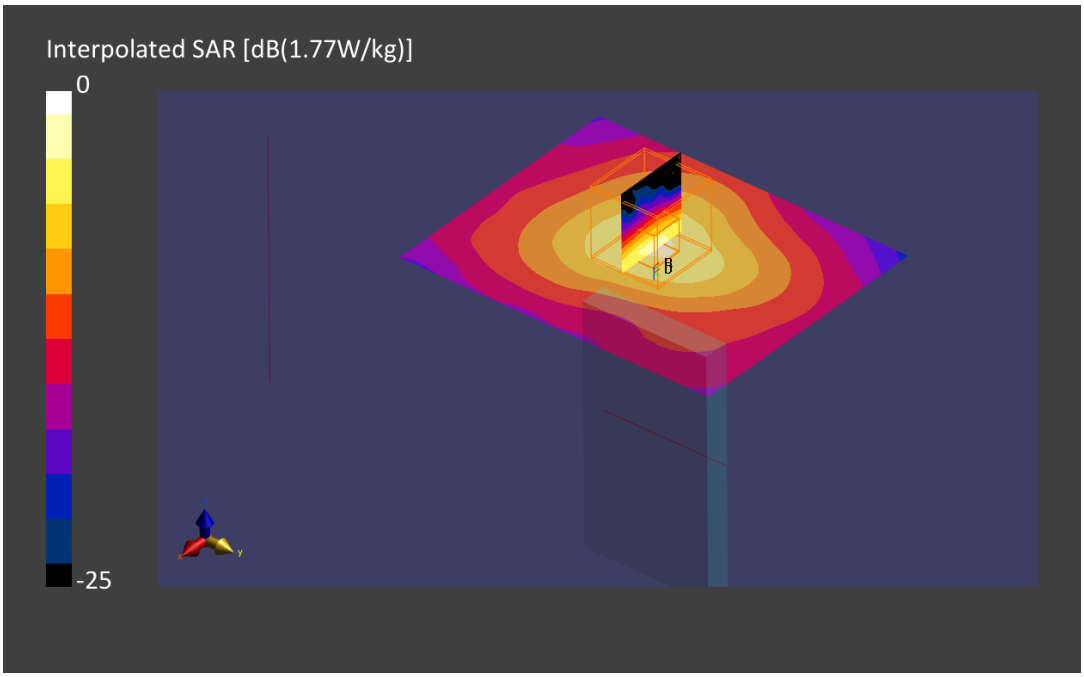

3. U-NII-2C - 802.11ax80, CH122, Chain A – Position Front Face

Device under Test Properties

Model, Manufacturer	Dimensions [mm]	IMEI	DUT Type
AX411E2W, Intel	40.0 x 75.0 x 8.0	WFM: 3413E8F11F3A	WLAN module + Reference antenna

Exposure Conditions

Phantom Section, TSL	Position, Test Distance [mm]	Band	Group, UID	Frequency [MHz], Channel Number	Conversion Factor	TSL Conductivity [S/m]	TSL Permittivity
Flat, MSL	EDGE LEFT, 15.00	WLAN 5GHz	WLAN, 10544-AAC	5610.0, 122	3.97	6.24	48.7

Hardware Setup

Phantom	TSL, Measured Date	Probe, Calibration Date	DAE, Calibration Date
ELI V8.0 (20deg probe tilt) -	MBBL-600-6000, 2021-Aug-16	EX3DV4 - SN7455, 2021-03-19	DAE4 Sn1517, 2021-03-11

Scan Setup

	Area Scan	Zoom Scan
Grid Extents [mm]	120.0 x 80.0	22.0 x 22.0 x 22.0
Grid Steps [mm]	10.0 x 10.0	4.0 x 4.0 x 1.4
Sensor Surface [mm]	3.0	1.4
Graded Grid	No	Yes
Grading Ratio	n/a	1.5
MAIA	Confirmed by MAIA	Confirmed by MAIA
Surface Detection	VMS + 6p	VMS + 6p
Scan Method	Measured	Measured

Measurement Results

	Area Scan	Zoom Scan
Date	2021-08-17, 16:35	2021-08-17, 16:43
psSAR1g [W/Kg]	0.292	0.310
psSAR10g [W/Kg]	0.111	0.112
Power Drift [dB]	-0.11	0.10
Power Scaling Scaling Factor [dB]	Disabled	Disabled
TSL Correction	Positive Only	Positive Only
M2/M1 [%]		61.7
Dist 3dB Peak [mm]		9.1

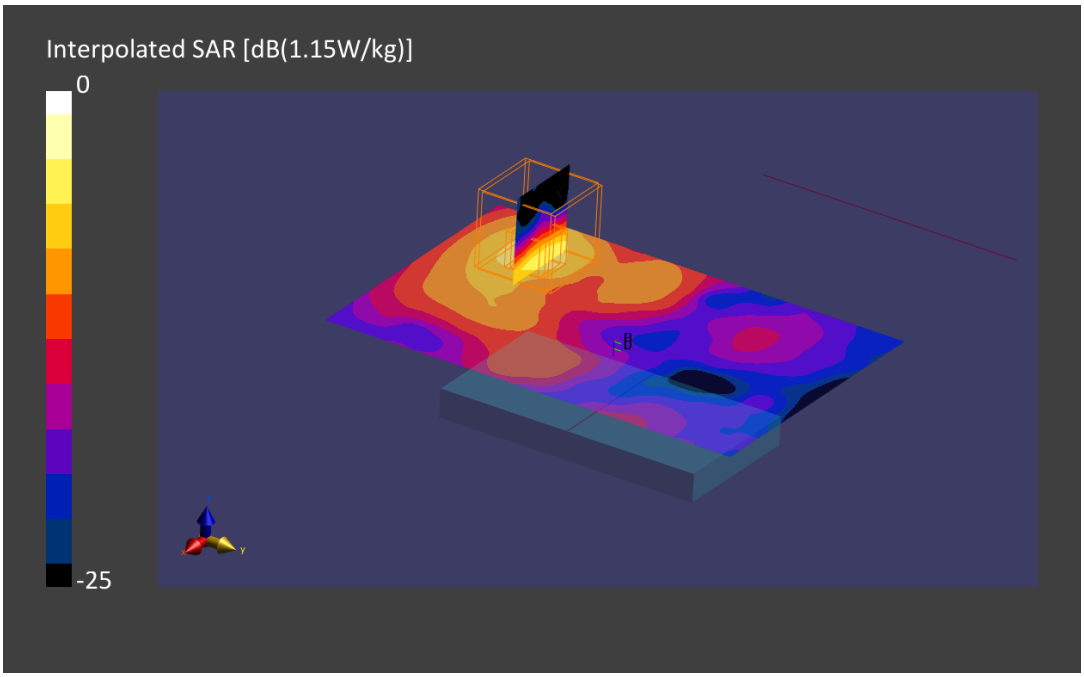

4. U-NII-3 - 802.11ax80, CH138, Chain B– Position Front Face

Device under Test Properties

Model, Manufacturer	Dimensions [mm]	IMEI	DUT Type
AX411E2W, Intel	40.0 x 75.0 x 8.0	WFM: 3413E8F11F3A	WLAN module + Reference antenna

Exposure Conditions

Phantom Section, TSL	Position, Test Distance [mm]	Band	Group, UID	Frequency [MHz], Channel Number	Conversion Factor	TSL Conductivity [S/m]	TSL Permittivity
Flat, MSL	FRONT, 15.00	WLAN 5GHz	WLAN, 10544-AAC	5690.0, 138	3.97	6.33	48.2

Hardware Setup

Phantom	TSL, Measured Date	Probe, Calibration Date	DAE, Calibration Date
ELI V8.0 (20deg probe tilt) -	MBBL-600-6000, 2021-Aug-16	EX3DV4 - SN7455, 2021-03-19	DAE4 Sn1517, 2021-03-11

Scan Setup

	Area Scan	Zoom Scan
Grid Extents [mm]	120.0 x 80.0	22.0 x 22.0 x 22.0
Grid Steps [mm]	10.0 x 10.0	4.0 x 4.0 x 1.4
Sensor Surface [mm]	3.0	1.4
Graded Grid	No	Yes
Grading Ratio	n/a	1.5
MAIA	Confirmed by MAIA	Confirmed by MAIA
Surface Detection	VMS + 6p	VMS + 6p
Scan Method	Measured	Measured

Measurement Results

	Area Scan	Zoom Scan
Date	2021-08-17, 18:46	2021-08-17, 18:54
psSAR1g [W/Kg]	0.255	0.258
psSAR10g [W/Kg]	0.097	0.092
Power Drift [dB]	0.02	0.06
Power Scaling Scaling Factor [dB]	Disabled	Disabled
TSL Correction	Positive Only	Positive Only
M2/M1 [%]		61.0
Dist 3dB Peak [mm]		10.9

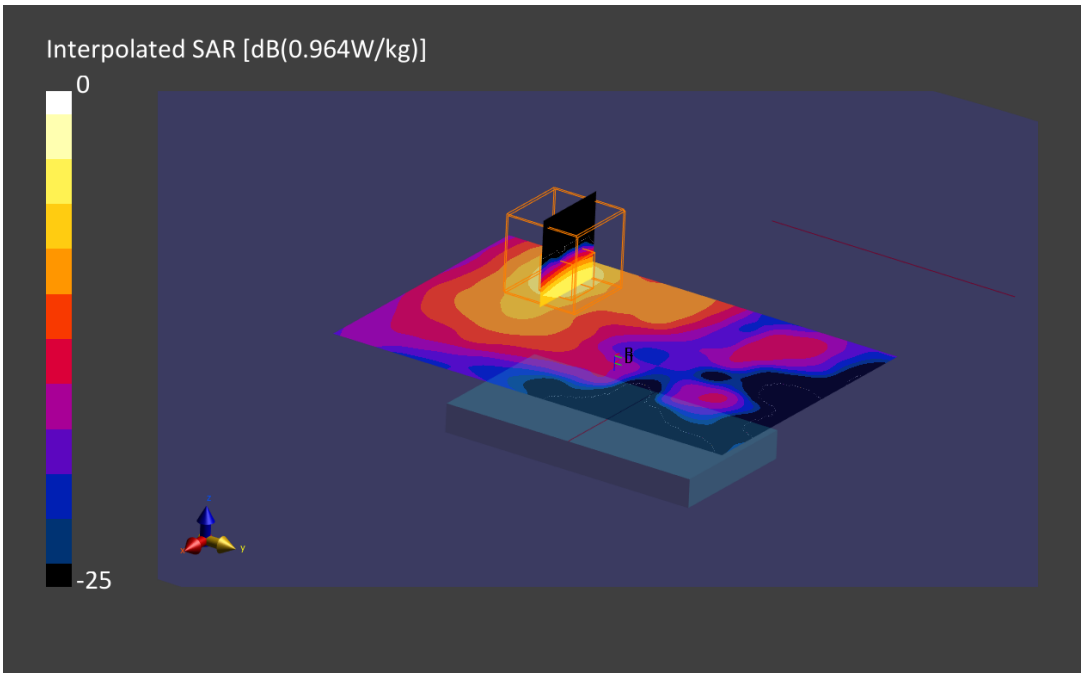

5. System Check Body Liquid 2450MHz

Device under Test Properties

Model, Manufacturer	Dimensions [mm]	S/N	DUT Type
D2450V2 , SPEAG	50.0 x 10.0 x 8.0	937	Validation Dipole

Exposure Conditions

Phantom Section, TSL	Position, Test Distance [mm]	Band	Group, UID	Frequency [MHz], Channel Number	Conversion Factor	TSL Conductivity [S/m]	TSL Permittivity
Flat, MSL	,		, 0--	2450.0, 0	7.37	1.95	54.1

Hardware Setup

Phantom	TSL, Measured Date	Probe, Calibration Date	DAE, Calibration Date
ELI V8.0 (20deg probe tilt) -	MBBL-600-6000, 2021-Aug-16	EX3DV4 - SN7455, 2021-03-19	DAE4 Sn1517, 2021-03-11

Scan Setup

	Area Scan	Zoom Scan
Grid Extents [mm]	40.0 x 80.0	30.0 x 30.0 x 30.0
Grid Steps [mm]	10.0 x 10.0	5.0 x 5.0 x 1.5
Sensor Surface [mm]	3.0	1.4
Graded Grid	No	Yes
Grading Ratio	n/a	1.5
MAIA	Confirmed by MAIA	Confirmed by MAIA
Surface Detection	VMS + 6p	VMS + 6p
Scan Method	Measured	Measured

Measurement Results

	Area Scan	Zoom Scan
Date	2021-08-17, 11:27	2021-08-17, 11:34
psSAR1g [W/Kg]	2.12	2.25
psSAR10g [W/Kg]	1.02	1.05
Power Drift [dB]	-0.02	-0.04
Power Scaling	Disabled	Disabled
Scaling Factor [dB]		
TSL Correction	Positive Only	Positive Only
M2/M1 [%]		81.3
Dist 3dB Peak [mm]		8.9

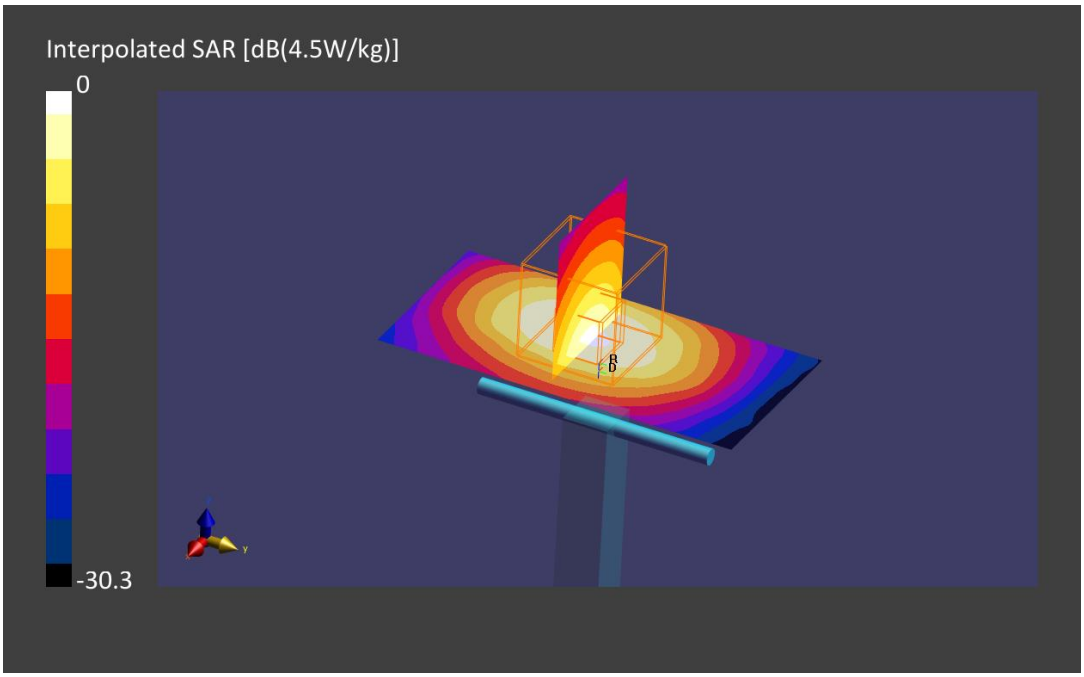

6. System Check Body Liquid 5300MHz

Device under Test Properties

Model, Manufacturer	Dimensions [mm]	S/N	DUT Type
D5GHzV2 , SPEAG	50.0 x 10.0 x 8.0	1259	Validation Dipole

Exposure Conditions

Phantom Section, TSL	Position, Test Distance [mm]	Band	Group, UID	Frequency [MHz], Channel Number	Conversion Factor	TSL Conductivity [S/m]	TSL Permittivity
Flat, MSL	,		, 0--	5300.0, 0	4.49	5.72	49.8

Hardware Setup

Phantom	TSL, Measured Date	Probe, Calibration Date	DAE, Calibration Date
ELI V8.0 (20deg probe tilt) -	MBBL-600-6000, 2021-Aug-16	EX3DV4 - SN7455, 2021-03-19	DAE4 Sn1517, 2021-03-11

Scan Setup

	Area Scan	Zoom Scan
Grid Extents [mm]	40.0 x 80.0	22.0 x 22.0 x 22.0
Grid Steps [mm]	10.0 x 10.0	4.0 x 4.0 x 1.4
Sensor Surface [mm]	3.0	1.4
Graded Grid	No	Yes
Grading Ratio	n/a	1.5
MAIA	Confirmed by MAIA	Confirmed by MAIA
Surface Detection	VMS + 6p	VMS + 6p
Scan Method	Measured	Measured

Measurement Results

	Area Scan	Zoom Scan
Date	2021-08-16, 17:05	2021-08-16, 17:13
psSAR1g [W/Kg]	3.11	3.48
psSAR10g [W/Kg]	0.947	0.987
Power Drift [dB]	-0.03	-0.01
Power Scaling	Disabled	Disabled
Scaling Factor [dB]		
TSL Correction	Positive Only	Positive Only
M2/M1 [%]		65.5
Dist 3dB Peak [mm]		7.4

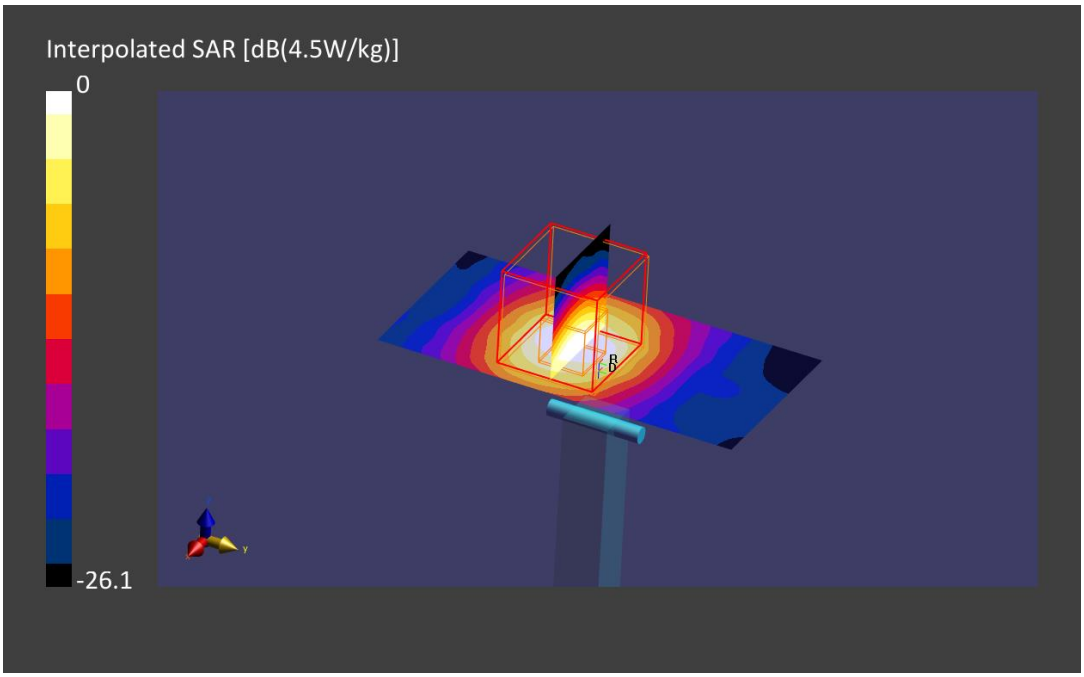

7. System Check Body Liquid 5600MHz

Device under Test Properties

Model, Manufacturer	Dimensions [mm]	S/N	DUT Type
D5GHzV2 , SPEAG	50.0 x 10.0 x 8.0	1259	Validation Dipole

Exposure Conditions

Phantom Section, TSL	Position, Test Distance [mm]	Band	Group, UID	Frequency [MHz], Channel Number	Conversion Factor	TSL Conductivity [S/m]	TSL Permittivity
Flat, MSL	,		, 0--	5600.0, 0	3.97	6.22	48.7

Hardware Setup

Phantom	TSL, Measured Date	Probe, Calibration Date	DAE, Calibration Date
ELI V8.0 (20deg probe tilt) -	MBBL-600-6000, 2021-Aug-16	EX3DV4 - SN7455, 2021-03-19	DAE4 Sn1517, 2021-03-11

Scan Setup

	Area Scan	Zoom Scan
Grid Extents [mm]	40.0 x 80.0	22.0 x 22.0 x 22.0
Grid Steps [mm]	10.0 x 10.0	4.0 x 4.0 x 1.4
Sensor Surface [mm]	3.0	1.4
Graded Grid	No	Yes
Grading Ratio	n/a	1.5
MAIA	Confirmed by MAIA	Confirmed by MAIA
Surface Detection	VMS + 6p	VMS + 6p
Scan Method	Measured	Measured

Measurement Results

	Area Scan	Zoom Scan
Date	2021-08-17, 11:06	2021-08-17, 11:14
psSAR1g [W/Kg]	3.53	4.00
psSAR10g [W/Kg]	1.08	1.15
Power Drift [dB]	-0.10	-0.06
Power Scaling	Disabled	Disabled
Scaling Factor [dB]		
TSL Correction	Positive Only	Positive Only
M2/M1 [%]		61.9
Dist 3dB Peak [mm]		7.4

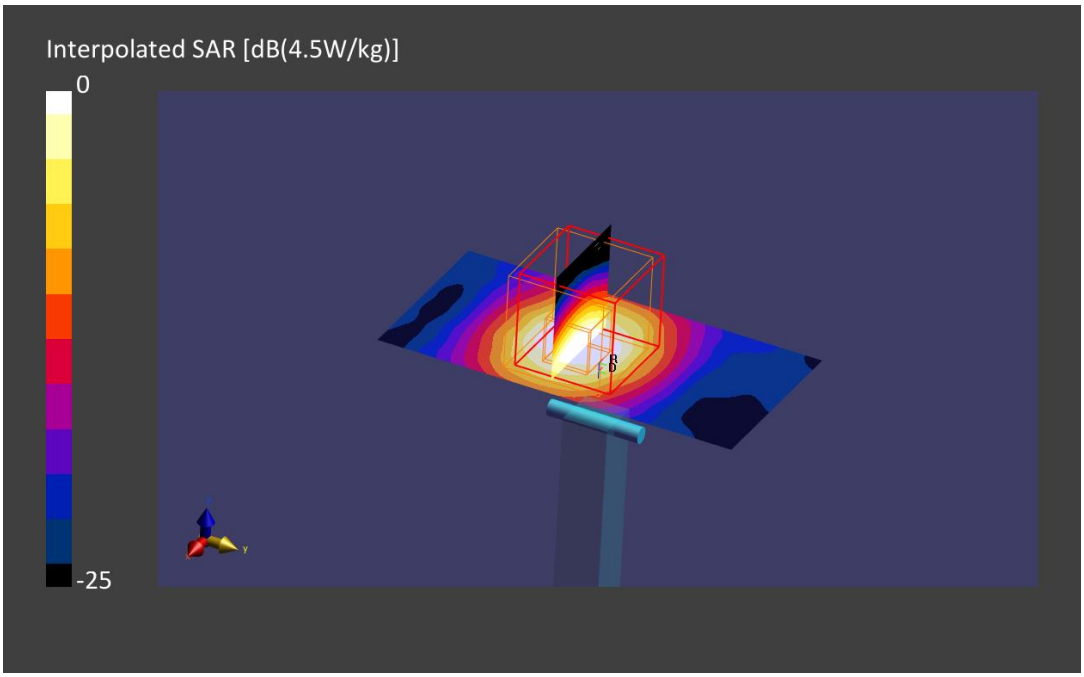

Annex D. TSL Dielectric Parameters

D.1 Body DTS 2450MHz

Freq. (MHz)	Target		2021-08-16 Measured	
	ε' (F/m)	σ (S/m)	ε' (F/m)	σ (S/m)
2400	52.77	1.90	54.13	1.9
2410	52.75	1.91	54.12	1.91
2420	52.74	1.92	54.11	1.92
2430	52.73	1.93	54.1	1.93
2440	52.71	1.94	54.09	1.94
2450	52.70	1.95	54.08	1.95
2460	52.69	1.96	54.07	1.96
2470	52.67	1.98	54.06	1.97
2480	52.66	1.99	54.05	1.98
2490	52.65	2.01	54.04	1.99
2500	52.64	2.02	54.03	1.99

Permittivity	Conductivity
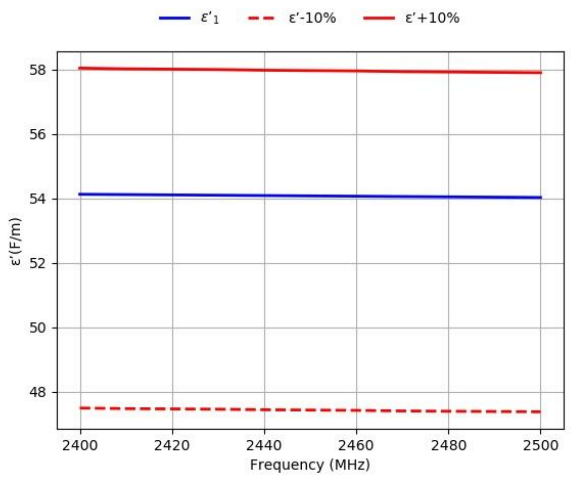	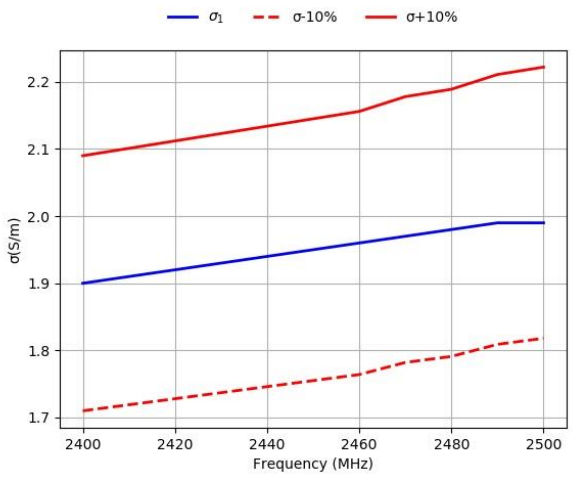

D.2 Body 5200MHz-5900MHz

Freq. (MHz)	Target		2021-08-16 Measured	
	ε' (F/m)	σ (S/m)	ε' (F/m)	σ (S/m)
5180	49.04	5.27	49.96	5.5
5190	49.03	5.29	49.95	5.52
5200	49.01	5.30	49.94	5.54
5210	49.00	5.31	49.93	5.56
5220	48.99	5.32	49.91	5.58
5230	48.97	5.33	49.9	5.6
5240	48.96	5.34	49.88	5.62
5250	48.95	5.36	49.87	5.64
5260	48.93	5.37	49.85	5.65
5270	48.92	5.38	49.84	5.67
5280	48.91	5.39	49.82	5.69
5290	48.89	5.40	49.8	5.7
5300	48.88	5.41	49.78	5.72
5310	48.87	5.43	49.76	5.74
5320	48.85	5.44	49.74	5.75
5330	48.84	5.45	49.72	5.77
5340	48.82	5.46	49.7	5.78
5350	48.81	5.47	49.67	5.8
5360	48.80	5.48	49.65	5.81
5370	48.78	5.50	49.62	5.83
5380	48.77	5.51	49.59	5.85
5390	48.76	5.52	49.56	5.86
5400	48.74	5.53	49.53	5.87
5500	48.61	5.65	49.5	5.89
5510	48.59	5.66	49.46	5.9
5520	48.58	5.67	49.43	5.92
5530	48.57	5.68	49.4	5.94
5540	48.55	5.69	49.36	5.95
5550	48.54	5.71	48.95	6.13
5560	48.53	5.72	48.9	6.15
5570	48.51	5.73	48.85	6.17
5580	48.50	5.74	48.8	6.18
5590	48.49	5.75	48.76	6.2
5600	48.47	5.76	48.71	6.22
5610	48.46	5.78	48.66	6.24
5620	48.44	5.79	48.61	6.26
5630	48.43	5.80	48.55	6.28
5640	48.42	5.81	48.5	6.29
5650	48.40	5.82	48.45	6.31
5660	48.39	5.83	48.4	6.33
5670	48.38	5.85	48.35	6.35
5680	48.36	5.86	48.3	6.37
5690	48.35	5.87	48.24	6.38
5700	48.34	5.88	48.19	6.33
5710	48.32	5.88	48.14	6.42
5720	48.31	5.89	48.09	6.43
5730	48.30	5.91	48.03	6.45
5740	48.28	5.92	47.98	6.47
5750	48.27	5.93	47.93	6.48
5760	48.25	5.94	47.87	6.5
5770	48.24	5.95	47.82	6.51
5780	48.23	5.96	47.77	6.52
5790	48.21	5.98	47.72	6.54
5800	48.20	5.99	47.66	6.55
5810	48.19	6.00	47.61	6.57
5820	48.17	6.01	47.56	6.58
5830	48.16	6.02	47.51	6.6
5840	48.15	6.03	47.46	6.61
5850	48.13	6.05	47.41	6.59
5860	48.12	6.06	47.37	6.63
5870	48.10	6.07	47.32	6.65
5880	48.09	6.08	47.28	6.66
5890	48.08	6.09	47.23	6.67
5900	48.06	6.10	47.19	6.69

Permittivity	Conductivity
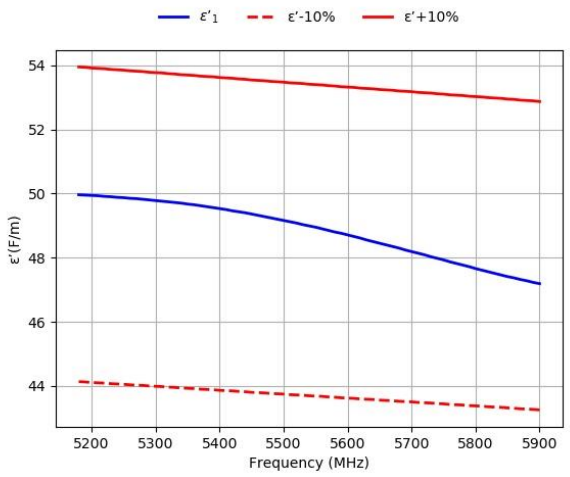	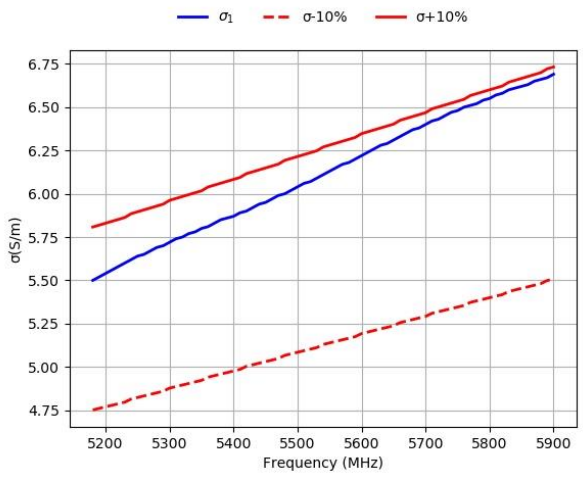

Annex E. Calibration Certificates

ID	Device	Type/Model	Serial Number	Manufacturer	Calibration Certificate
086-000	Dosimetric E-field Probe	EX3DV4	7455	SPEAG	
070-000	2450MHz System Validation Dipole	D2450V2	937	SPEAG	
084-000	5GHz System Validation Dipole	D5GHzV2	1259	SPEAG	

Dipole calibration

According to the KDB 865664 D01, a dipole must be calibrated using a fully validated SAR system according to the tissue dielectric parameters and SAR probe calibration frequency required for device testing. However, instead of the typical annual calibration recommended by measurement standards, longer calibration intervals of up to three years may be considered when it is demonstrated that the SAR target, impedance and return loss of a dipole have remain stable according to the following requirements.

1. When the most recent return-loss result, measured at least annually, deviates by less than 20% from the previous measurement (i.e. value in dB × 0.2) or not meeting the required 20 dB minimum return-loss requirement.

2. When the most recent measurement of the real and imaginary parts of the impedance, measured at least annually, deviates by less than 5 Ω from the previous measurement

The below results show the latest return loss and impedance measurements for each dipole performed by the lab:

Dipole ID #070-000			
Dipole 2450MHz Body TSL			
	Return Loss [dB]	Impedance [Ω]	Date
Initial Calibration	-29.7	50.85 + 3.20 j	2020-05-12
Last	-28.5	48.17 - 1.19 j	2021-05-14
Dipole ID #084-000			
Dipole 5300MHz Body TSL			
	Return Loss [dB]	Impedance [Ω]	Date
Initial Calibration	-32.7	50.4 – 2.3 j	2020-03-10
Last	-30.9	52.6 + 1.3 j	2021-02-15
Dipole 5500MHz Body TSL			
	Return Loss [dB]	Impedance [Ω]	Date
Initial Calibration	-32.7	47.8 – 0.5 j	2020-03-10
Last	-28.7	47.8 – 3.9 j	2021-02-15
Dipole 5600MHz Body TSL			
	Return Loss [dB]	Impedance [Ω]	Date
Initial Calibration	-30.5	53.0 – 0.8 j	2020-03-10
Last	-26.3	49.5 – 4.8 j	2021-02-15
Dipole 5800MHz Body TSL			
	Return Loss [dB]	Impedance [Ω]	Date
Initial Calibration	-31.1	52.0 + 2.0 j	2020-03-10
Last	-34.2	51.1 + 0.2 j	2021-02-15