N° 1-6736
Scope available
on www.cofrac.fr

CERTIFICATE #3478.01

TEST REPORT

EUT Description	**Wireless Module installed in Regular Notebook PC**
Brand Name	**Intel® Wi-Fi AX411**
Model Name	**AX411NGW**
FCC/IC ID	**PD9AX411NG; 1000M-AX411NG**
Date of Test Start/End	**2023-01-19 / 2023-03-07**
Features	**802.11ax, Dual Band, 2x2 Wi-Fi + Bluetooth® 5.2 + CDB (Concurrent Dual Band simultaneous Wi-Fi connection)** (see section 5)
Description	**Dell P162G + WNC antennas**

Applicant	**Intel Mobile Communications**
Address	**100 Center Point Circle, Suite 200 / Columbia, SC 29210 / United States**
Contact Person	**Steven Hackett**
Telephone/Fax/ Email	**steven.c.hackett@intel.com**

Reference Standards	**FCC 47 CFR Part §2.1093** **RSS-102, issue 5** (see section 1)	
RF Exposure Environment	**Portable devices - General population/uncontrolled exposure**	
Exposure Conditions	**Body worn**	
	SAR Result	SAR Limit
Maximum SAR Result & Limit	**0.38 W/kg (1g)**	**1.6 W/kg (1g)**
Min. test separation distance	**0mm to phantom, 5.26mm w/ bumper to antenna edge**	

Test Report identification	**221114-03.TR01**
Revision Control	**Rev.00** **This test report revision replaces any previous test report revision** (see section 8)

The test results relate only to the samples tested.
Reference to accreditation shall be used only by full reproduction of test report.

Issued by	Reviewed by
Digitally signed by Edgar GARCIA Date: 2023.03.08 18:54:25 +01'00'	Digitally signed by Adel LOUNES
Edgar GARCIA (SAR Test Engineer)	Adel LOUNES (SAR Test Lead Engineer)

Intel Corporation S.A.S – WRF Lab
425 rue de Goa – Le Cargo B6 - 06600 Antibes, France
Tel. +33493001400 / Fax +33493001401

Table of Contents

1. Standards, reference documents and applicable test methods 4

2. General conditions, competences and guarantees 4

3. Environmental Conditions 5

4. Test samples 5

5. EUT Features 5

6. Remarks and comments 8

7. Test Verdicts summary 8

8. Document Revision History 8

Annex A. Test & System Description 9

A.1 SAR DEFINITION 9

A.2 SAR MEASUREMENT SYSTEM 10

A.2.1 SAR Measurement Setup 10

A.2.2 E-Field Measurement Probe 11

A.2.3 Flat Phantom 11

A.2.4 Device Positioner 12

A.3 DATA EVALUATION 13

A.4 SYSTEM AND LIQUID CHECK 15

A.4.1 System Check 15

A.4.2 Liquid Check 16

A.5 TEST EQUIPMENT LIST 17

A.5.1 Tissue Simulant Liquid 17

A.6 MEASUREMENT UNCERTAINTY EVALUATION 18

A.7 RF EXPOSURE LIMITS 18

Annex B. Test Results 19

B.1 TEST CONDITIONS 19

B.1.1 Test SAR Test positions relative to the phantom 19

B.1.2 Test signal, Output power and Test Frequencies 20

B.1.3 Evaluation Exclusion and Test Reductions 20

B.2 CONDUCTED POWER MEASUREMENTS 23

B.2.1 WLAN 2.4GHz 23

B.2.2 WLAN 5GHz (U-NII) 24

B.2.3 Bluetooth 30

B.3 TISSUE PARAMETERS MEASUREMENT 31

B.4 SYSTEM CHECK MEASUREMENTS 31

B.5 SAR TEST RESULTS 32

B.5.1 Bluetooth & 802.11b/g/n/ax – 2.4GHz – DTS 32

B.5.2 802.11a/n/ac/ax – 5.3 GHz – U-NII-2A 32

B.5.3 802.11a/n/ac/ax – 5.6 GHz – U-NII-2C 32

B.5.4 802.11a/n/ac/ax – 5.8 GHz – U-NII-3 32

B.5.5 SAR Measurement Variability 33

B.5.6 Simultaneous Transmission SAR Evaluation 33

Annex C. Test System Plots 34

Annex D. TSL Dielectric Parameters 44

D.1 BODY DTS 2300 – 2500 MHZ 44

D.2 BODY DTS 5200 – 5900 MHZ 44

Annex E. Calibration Certificates 45

Annex F. Photographs 46
F.1 TEST SAMPLE 46
F.2 TEST POSITIONS 47
F.3 ANTENNA HOST PLATFORM LOCATION AND ADJACENT EDGE POSITIONS RELATIVE TO THE BODY 48
F.4 PHANTOM LIQUID LEVEL DURING MEASUREMENTS 49

1. Standards, reference documents and applicable test methods

FCC	1. FCC Title 47 CFR Part §2.1093 – Radiofrequency radiation exposure evaluation: portable devices. 2020-10-01 Edition 2. FCC OET 447498 D04 Interim General RF Exposure Guidance v01– RF Exposure Procedures and Equipment Authorization Policies for Mobile and Portable Devices. 3. FCC OET KDB 616217 D04 v01r02 – SAR Evaluation Considerations for Laptop, Notebook, Netbook and Tablet Computers. 4. FCC OET KDB 865664 D01 v01r04 – SAR Measurement Requirements for 100 MHz to 6 GHz. 5. FCC OET KDB 865664 D02 v01r02 – RF Exposure Compliance Reporting and Documentation Considerations. 6. IEEE Std 1528-2013 – IEEE Recommended Practice Determining the Peak Spatial-Average Specific Absorption Rate (SAR) in the Human Head from Wireless Communication Devices: Measurement Techniques…
ISED	1. ISED RSS 102, Issue 5 – Radio Frequency (RF) Exposure Compliance of Radio communication Apparatus (All Frequency Bands 2. ISED RSS-102 Supplementary Procedures SPR-001 SAR testing requirements with regard to bystanders for laptop type computers with antennas built-In on display screen (Laptop Mode / Tablet Mode) 3. ISED Notice 2020-DRS0020 Applicability of IEC/IEEE 62209-1528 and IEC 62209-3 Standard 4. ISED Notice 2016-DRS001 – Applicability of latest FCC RF Exposure KDB Procedures and Other Procedures. 5. ISED Notice 2012-DRS0529 – SAR correction for measured conductivity and relative permittivity based on IEC 62209-2 standard. 7. FCC OET KDB447498D01V06 General RF Exposure Guidance v01– RF Exposure Procedures and Equipment Authorization Policies for Mobile and Portable Devices. 6. FCC OET KDB 616217 D04 v01r02 – SAR Evaluation Considerations for Laptop, Notebook, Netbook and Tablet Computers. 7. FCC OET KDB 865664 D01 v01r04 – SAR Measurement Requirements for 100 MHz to 6 GHz. 8. FCC OET KDB 865664 D02 v01r02 – RF Exposure Compliance Reporting and Documentation Considerations. 8. IEC/IEEE 62209-1528:2020 Measurement procedure for the assessment of specific absorption rate of human exposure to radio frequency fields from hand-held and body-mounted wireless communication devices – Part 1528: Human models, instrumentation, and procedures (Frequency range of 4 MHz to 10 GHz)

2. General conditions, competences and guarantees

- ✓ Tests performed under FCC standards identified in section 1 are covered by A2LA accreditation.
- ✓ Tests performed under ISED standards identified in section 1 are covered by Cofrac accreditation.
- ✓ Intel Corporation SAS Wireless RF Lab (Intel WRF Lab) is an ISO/IEC 17025:2017 laboratory accredited by the American Association for Laboratory Accreditation (A2LA) with the certificate number 3478.01.
- ✓ Intel Corporation SAS Wireless RF Lab (Intel WRF Lab) is an Accredited Test Firm recognized by the FCC, with Designation Number FR0011.
- ✓ Intel Corporation SAS Wireless RF Lab (Intel WRF Lab) is an ISO/IEC 17025:2017 testing laboratory accredited by the French Committee for Accreditation (Cofrac) with the certificate number 1-6736.
- ✓ Intel Corporation SAS Wireless RF Lab (Intel WRF Lab) is a Registered Test Site listed by ISED, with ISED #1000Y.
- ✓ Intel WRF Lab only provides testing services and is committed to providing reliable, unbiased test results and interpretations.
- ✓ Intel WRF Lab is liable to the client for the maintenance of the confidentiality of all information related to the item under test and the results of the test.
- ✓ Intel WRF Lab has developed calibration and proficiency programs for its measurement equipment to ensure correlated and reliable results to its customers.
- ✓ This report is only referred to the item that has undergone the test.
- ✓ This report does not imply an approval of the product by the Certification Bodies or competent Authorities.

3. Environmental Conditions

At the site where the measurements were performed the following limits were not exceeded during the tests:

Temperature	21.1ºC ± 1ºC
Humidity	37% ± 10%
Liquid Temperature	21.4ºC ± 1.6ºC

4. Test samples

Sample	Control #	Description	Model	Serial #	Date of receipt
#01	221114-03.S01	Wireless Module installed in Regular Notebook PC	P162G	7481208000001	2022-12-08

5. EUT Features

The herein information is provided by the customer
Intel WRF Lab declines any responsibility for the accuracy of the stated customer provided information, especially if it has any impact on the correctness of test results presented in this report.

Brand Name	Intel® Wi-Fi AX411
Model Name	AX411NGW
Software Version	DRTU-02593.22.170.0
Driver Version	99.0.76.1
Prototype / Production	Production
Host Identification	P162G
Supported Radios	802.11b/g/n/ax 2.4GHz (2400.0 – 2483.5 MHz) 802.11a/n/ac/ax 5.2GHz (5150.0 – 5250.0 MHz) 5.3GHz (5250.0 – 5350.0 MHz) 5.6GHz (5470.0 – 5725.0 MHz) 5.8GHz (5725.0 – 5850.0 MHz) 802.11ax 6.0GHz (5925.0 – 7125.0 MHz)* Bluetooth 2.4GHz (2400.0 – 2483.5 MHz)

Antenna Information

Transmitter	Main / Tx2/ Chain B	Aux / Tx1/ Chain A
Manufacturer	WNC	WNC
Antenna type	PIFA	PIFA
Part number	DC33002QV0L (81ELA715.G56)	DC33002QV1L (81ELA715.G58)

See Annex F for more details on antennas location.

Simultaneous Transmission Configurations

Mode	Main / Tx2/ Chain B	Aux / Tx1/ Chain A
Single Band Mode 2.4GHz		
2.4GHz	2.4GHz	2.4GHz
2.4GHz SISO / Co-run	2.4GHz	BT
Single Band Mode 5GHz		
5GHz	5GHz	5GHz
5GHz + BT Co-run	5GHz	5GHz + BT Co-run
Single Band Mode 6GHz		
6.5GHz	6GHz	6GHz
6.5GHz + BT Co-run	6GHz	6GHz + BT Co-run
CDB Mode		
BT Co-run – CDB SISO	2.4GHz + 6GHz	BT
CDB only SISO	2.4GHz + 6GHz	-
CDB only SISO	-	2.4GHz + 6GHz
CDB only MIMO	2.4GHz + 6GHz	2.4GHz + 6GHz
BT Co-run (CDB SISO)	2.4GHz	6GHz + BT

Additional Information

No WWAN transmitter is considered in this report
5.60-5.65 GHz band (TDWR) is supported by the device
Band gap is supported by the device

*For WiFi 6E band refer to reports:
221114-03.TR02
221114-03.TR03

Supported Radios

Mode	Duty Cycle	Modulation	Band	UL Freq Range (MHz)	Measured Max. Conducted Power (dBm)
802.11b/g/n/ax	100%	BPSK QPSK 16QAM 64QAM	2.4GHz	2400-2483.5	18.97
802.11a/n/ac/ax	100%	BPSK QPSK 16QAM 64QAM 256QAM	5.2GHz	5150-5250	NM
			5.3GHz	5250-5350	18.97
			5.6GHz	5475-5725	17.24
			5.8GHz	5725-5850	20.71
BDR/EDR v5.2	77%	GFSK π/4 DQPSK 8DPSK	2.4GHz	2400-2483.5	10.39
Bluetooth LE v5.2	33%	GFSK	2.4GHz	2400-2483.5	NM

NM: Not Measured

Maximum Output power specification + Tune up tolerance limit, as specified by the client

Equipment Class	Mode	BW (MHz)	Main (dBm)	Aux (dBm)
DTS	802.11b	20	19.00	18.50
	802.11g	20	19.00	18.50
	802.11n20	20	19.00	18.50
	802.11ax20	20	19.00	18.50
	802.11n40	40	16.75	17.00
	802.11ax40	40	16.75	17.00
U-NII-1	802.11a	20	18.00	19.00
	802.11n20	20	18.00	19.00
	802.11ax20	20	18.00	19.00
	802.11n40	40	18.00	19.00
	802.11ax40	40	18.00	19.00
	802.11ac80	80	17.50	17.50
	802.11ax80	80	17.50	17.50
U-NII-2A	802.11a	20	18.00	19.00
	802.11n20	20	18.00	19.00
	802.11ax20	20	18.00	19.00
	802.11n40	40	18.00	19.00
	802.11ax40	40	18.00	19.00
	802.11ac80	80	18.00	19.00
	802.11ax80	80	18.00	19.00
	802.11ac160	160	14.00	14.50
	802.11ax160	160	14.00	14.50
U-NII-2C	802.11a	20	17.50	17.50
	802.11n20	20	17.50	17.50
	802.11ax20	20	17.50	17.50
	802.11n40	40	17.50	17.50
	802.11ax40	40	17.50	17.50
	802.11ac80	80	17.50	17.50
	802.11ax80	80	17.50	17.50
	802.11ac160	160	15.00	15.00
	802.11ax160	160	15.00	15.00
U-NII-3	802.11a	20	17.50	17.50
	802.11n20	20	21.00	21.00
	802.11ax20	20	21.00	21.00
	802.11n40	40	21.00	21.00
	802.11ax40	40	21.00	21.00
	802.11ac80	80	19.50	19.50
	802.11ax80	80	19.50	19.50
BT	Bluetooth v5.2 BDR	1		10.50
	Bluetooth v5.2 EDR2	1		9.50
	Bluetooth v5.2 EDR3	1		9.50
	BLE	2		9.00

6. Remarks and comments

1. The conducted values are obtained by applying the BIOS SAR power values to the AX211NGW Intel module installed in the P162G identified in this report, as requested by the customer
2. Only the plots for the test positions with the highest measured SAR per band/mode are included in Annex C as required per FCC OET KDB 865664 D02, paragraph 2.3.h
3. This test report shows only test results for WLAN2.4GHz, 5GHz and BT.

7. Test Verdicts summary

The statement of conformity to applicable standards in the table below are based on the measured values, without considering the measurement uncertainties.

Standard	Band	Highest Reported SAR (1g) (W/kg)	Verdict
Bluetooth	2.4GHz	0.02	P
802.11b/g/n/ax	2.4GHz	0.25	P
802.11a/n/ac/ax	5.2GHz	NM	NA
	5.3GHz	0.27	P
	5.6GHz	0.30	P
	5.8GHz	0.38	P

P: Pass
F: Fail
NM: Not Measured
NA: Not Applicable

According to the FCC OET KDB 690783 D01, this is the summary of the values for the Grant Listing:

Highest Reported SAR (1g) (W/kg)			
Exposure Condition	Equipment Class		
	DTS	DSS	U-NII
Body Worn	0.25	0.02	0.38
Simultaneous Tx	Sum-SAR: 1.07	Sum-SAR: 0.75	Sum-SAR: 1.07

Considering the results of the performed test according to FCC 47CFR Part 2.1093 and ISED RSS 102, Issue 5 the item under test is IN COMPLIANCE with the requested specifications specified in Section1. Standards, reference documents and applicable test methods

8. Document Revision History

Revision #	Modified by	Revision Details
Rev. 00	E. Garcia	First Issue

Annex A. Test & System Description

A.1 SAR Definition

Specific Absorption rate is defined as the time derivative of the incremental energy (dW) absorbed by (dissipated in) and incremental mass (dm) contained in a volume element (dV) of a given density (ρ).

$$SAR = \frac{d}{dt} \cdot \left(\frac{dW}{dm}\right) = \frac{d}{dt} \cdot \left(\frac{dW}{\rho \cdot dV}\right)$$

SAR is expressed in units of watts per kilogram (W/kg). SAR can be related to the electric field at a point by

$$SAR = \frac{\sigma |E|^2}{\rho}$$

Where:

σ = Conductivity of the tissue (S/m)
ρ = Mass density of the tissue (kg/m3)
E = RMS electric field strength (V/m)

A.2 SAR Measurement System

A.2.1 SAR Measurement Setup

The DASY6 system for performing compliance tests consists of the following items:

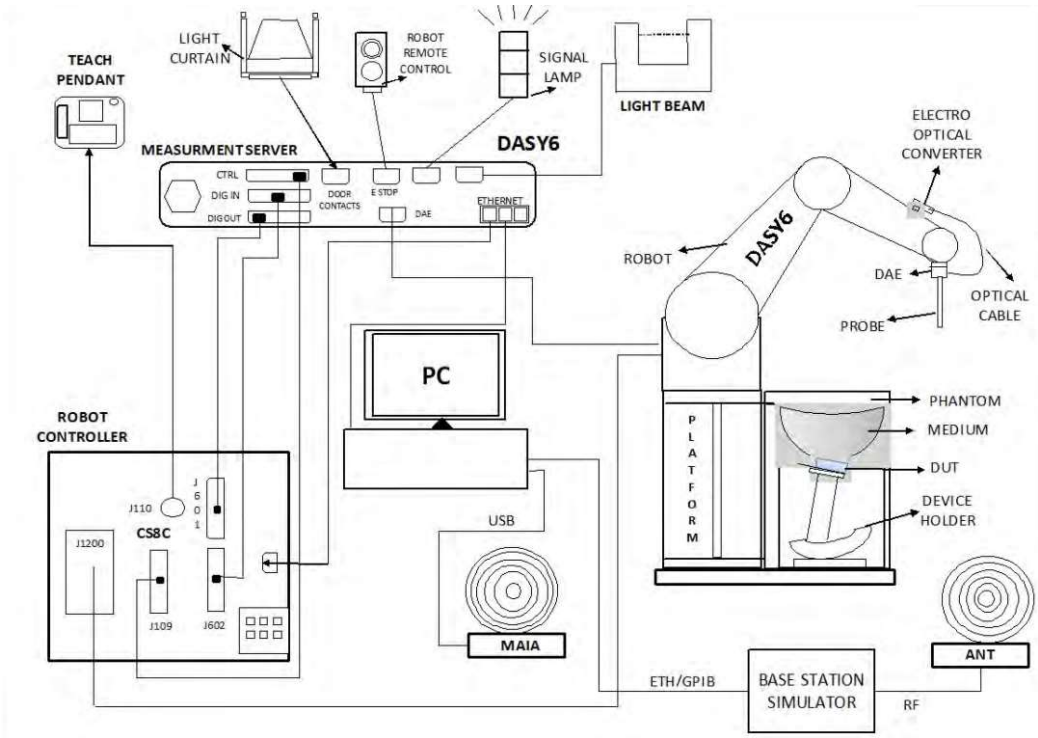

- ✓ A standard high precision 6-axis robot (Staübli TX/RX family) with controller, teach pendant and software. It includes an arm extension for accommodating the data acquisition electronics (DAE)
- ✓ An isotropic field probe optimized and calibrated for the targeted measurements.
- ✓ A data acquisition electronics (DAE) which performs the signal amplification, signal multiplexing, AD-conversion, offset measurements, mechanical surface detection, collision detection, etc. The unit is battery powered with standard or rechargeable batteries. The signal is optically transmitted to the EOC.
- ✓ The Electro-optical Converter (EOC) performs the conversion from optical to electrical signals for the digital communication to the DAE. The EOC signal is transmitted to the measurement server.
- ✓ The function of the measurement server is to perform the time critical tasks such as signal filtering, control of the robot operation and fast movements interrupts.
- ✓ The Light Beam used is for probe alignment. This improves the (absolute) accuracy of the probe positioning.
- ✓ A computer running Win7 professional operating system and the DASY6 software.
- ✓ Remote control and teach pendant as well as additional circuitry for robot safety such as warning lamps, etc.
- ✓ The phantom, the device holder and other accessories according to the targeted measurement.
- ✓ MAIA is a hardware interface (Antenna) used to evaluate the modulation and audio interference characteristics of RF signals.
- ✓ ANT is an ultra-wideband antenna for use with the base station simulators over 698 MHz to 6GHz.
- ✓ The base station simulator is an equipment used for SAR cellular tests in order to emulate the cellular signals characteristics and behavior between a regular base station and the equipment under test.
- ✓ Tissue simulating liquid.
- ✓ System Validation dipoles.
- ✓ Network emulator or RF test tool.

A.2.2 E-Field Measurement Probe

The probe is constructed using three orthogonal dipole sensors arranged on an interlocking, triangular prism core. The probe has built-in shielding against static charges and is contained within a PEEK cylindrical enclosure material at the tip.

The probe's characteristics are:

Frequency Range	30MHz – 6GHz
Length	337 mm
Probe tip external diameter	2.5 mm
Typical distance between dipoles and the probe tip	1 mm
Axial Isotropy (in human-equivalent liquids)	±0.3 dB
Hemispherical Isotropy (in human-equivalent liquids)	±0.5 dB
Linearity	±0.2 dB
Maximum operating SAR	100 W/kg
Lower SAR detection threshold	0.001 W/kg

A.2.3 Flat Phantom

Phantom for compliance testing of handheld and body-mounted wireless devices in the frequency range of 30 MHz to 6 GHz. ELI is fully compatible with the IEC 62209-2 standard and all known tissue simulating liquids. ELI has been optimized regarding its performance and can be integrated into our standard phantom tables. A cover prevents evaporation of the liquid. Reference markings on the phantom allow installation of the complete setup, including all predefined phantom positions and measurement grids, by teaching three points. The phantom is compatible with all SPEAG dosimetric probes and dipoles.

The phantom's characteristics are:

Material	Vinylester, glass fiber reinforced (VE-GF)
Shell thickness	2 mm ± 0.2 mm
Filling volume	30 Liters approx.
Dimensions	Major axis: 600mm / Minor axis: 400mm

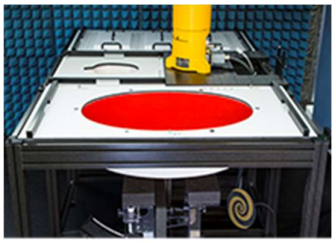

A.2.4 Device Positioner

The SAR in the phantom is approximately inversely proportional to the square of the distance between the source and the liquid surface. For a source at 5 mm distance, a positioning uncertainty of 0.5 mm would produce a SAR uncertainty of 20%. Accurate device positioning is therefore crucial for accurate and repeatable measurements. The positions in which the devices must be measured are defined by the standards.

The DASY device holder is designed to cope with the different positions given in the standard. It has two scales for device rotation (with respect to the body axis) and device inclination (with respect to the line between the ear reference points). The rotation center for both scales is the ear reference point (ERP). Thus the device needs no repositioning when changing the angles.

The DASY device holder is constructed of low-loss POM material having the following dielectric parameters: relative permittivity ε=3 and loss tangent δ=0.02. The amount of dielectric material has been reduced in the closest vicinity of the device, since measurements have suggested that the influence of the clamp on the test results could thus be lowered.

A simple but effective and easy-to-use extension for the Mounting Device; facilitates testing of larger devices according to IEC 62209-2 (e.g., laptops, cameras, etc.); lightweight and fits easily on the upper part of the Mounting Device in place of the phone positioner. The extension is fully compatible with the Twin SAM, ELI and other Flat Phantoms.

A.3 Data Evaluation

- **Power Reference measurement**

The robot measures the E field in a specified reference position that can be either the selected section's grid reference point or a user point in this section at 4mm of the inner surface of the phantom, 2mm for frequencies above 3GHz.

- **Area Scan**

Measurement procedures for evaluating SAR from wireless handsets typically start with a coarse measurement grid to determine the approximate location of the local peak SAR values. This is known as the area-scan procedure. The SAR distribution is scanned along the inside surface of one side of the phantom head, at least for an area larger than the projection of the handset and antenna. The distance between the measured points and phantom surface should be less than 8 mm, and should remain constant (with variation less than ± 1 mm) during the entire scan in order to determine the locations of the local peak SAR with sufficient accuracy. The angle between the probe axis and the surface normal line is recommended but not required to be less than 30°. If this angle is larger than 30° and the closest point on the probe-tip housing to the phantom surface is closer than a probe diameter, the boundary effect may become larger and polarization dependent. This additional uncertainty needs to be analyzed and accounted for. To achieve this, modified test procedures and additional uncertainty analyses not described in this recommended practice may be required. The measurement and interpolation point spacing should be chosen such as to allow identification of the local peak locations to within one-half of the linear dimension of a side of the zoom-scan volume. Because a local peak having specific amplitude and steep gradients may produce a lower peak spatial-average SAR compared to peaks with slightly lower amplitude and less steep gradients, it is necessary to evaluate these other peaks as well. However, since the spatial gradients of local SAR peaks are a function of the wavelength inside the tissue-equivalent liquid and the incident magnetic field strength, it is not necessary to evaluate local peaks that are less than 2 dB or more below the global maximum peak. Two-dimensional spline algorithms (Brishoual et al. 2001; Press et al., 1996) are typically used to determine the peaks and gradients within the scanned area. If a peak is found at a distance from the scan border of less than one-half the edge dimension of the desired 1 g or 10 g cube, the measurement area should be enlarged if possible.

- **Zoom Scan**

To evaluate the peak spatial-average SAR values for 1 g or 10 g cubes, fine resolution volume scans, called zoom scans, are performed at the peak SAR locations identified during the area scan. The minimum zoom scan volume size should extend at least 1.5 times the edge dimension of a 1 g cube in all directions from the center of the scan volume, for both 1 g and 10 g peak spatial-average SAR evaluations. Along the phantom curved surfaces, the front face of the volume facing the tissue/liquid interface conforms to the curved boundary, to ensure that all SAR peaks are captured. The back face should be equally distorted to maintain the correct averaging mass. The flatness and orientation of the four side faces are unchanged from that of a cube whose orientation is within ± 30° of the line normal to the phantom at the center of the cube face next to the phantom surface. The peak local SAR locations that were determined in the area scan (interpolated values) should be used for the centers of the zoom scans. If a scan volume cannot be centered due to proximity of a phantom shape feature, the probe should be tilted to allow scan volume enlargement. If probe tilt is not feasible, the zoom-scan origin may be shifted, but not by more than half of the 1 g or 10 g cube edge dimension.

After the zoom-scan measurement, extrapolations from the closest measured points to the surface, for example along lines parallel to the zoom-scan centerline, and interpolations to a finer resolution between all measured and extrapolated points are performed. Extrapolation algorithm considerations are described in 6.5.3, and 3-D spline methods (Brishoual et al., 2001; Kreyszig, 1983; Press et al., 1996) can be used for interpolation. The peak spatial-average SAR is finally determined by a numerical averaging of the local SAR values in the interpolation grid, using for example a trapezoidal algorithm for the integration (averaging).

In some areas of the phantom, such as the jaw and upper head regions, the angle of the probe with respect to the line normal to the surface may be relatively large, e.g., greater than ± 30º, which could increase the boundary effect error to a larger level. In these cases, during the zoom scan a change in the orientation of the probe, the phantom, or both is recommended but not required for the duration of the zoom scan, so that the angle between the probe axis and the line normal to the surface is within 30º for all measurement points.

- **Power Drift measurement**

The robot re-measures the E-Field in the same reference location measured at the Power Reference. The drift measurement gives the field difference in dB from the first to the last reference reading. This allows a user to monitor the power drift of the device under test that must remain within a maximum variation of ±5%.

- **Post-processing**

The procedure for spatial peak SAR evaluation has been implemented according to the IEEE1528, IEC 62209-1/2 and IEC/IEEE 62209-1528:2020 standards. It can be conducted for 1g and 10g.

The software allows evaluations that combine measured data and robot positions, such as:

- ✓ Maximum search
- ✓ Extrapolation
- ✓ Boundary correction
- ✓ Peak search for averaged SAR

Interpolation between the measured points is performed when the resolution of the grid is not fine enough to compute the average SAR over a given mass.

Extrapolation routines are used to obtain SAR values between the lowest measurement points and the inner phantom surface. The extrapolation is determined by the surface detection distance and the probe sensor offset. Several measurements at different distances are necessary for the extrapolation.

A.4 System and Liquid Check

A.4.1 System Check

The system performance check verifies that the system operates within its specifications. System and operator errors can be detected and corrected. It is recommended that the system performance check be performed prior to any usage of the system in order to guarantee reproducible results.

The system performance check uses normal SAR measurements in a simplified setup with a well characterized source. This setup was selected to give a high sensitivity to all parameters that might fail or vary over time. The system check does not intend to replace the calibration of the components, but indicates situations where the system uncertainty is exceeded due to drift or failure.

In the simplified setup for system check, the EUT is replaced by a calibrated dipole and the power source is replaced by a controlled continuous wave generated by a signal generator. The calibrated dipole must be placed beneath the flat phantom section of the phantom at the correct distance.

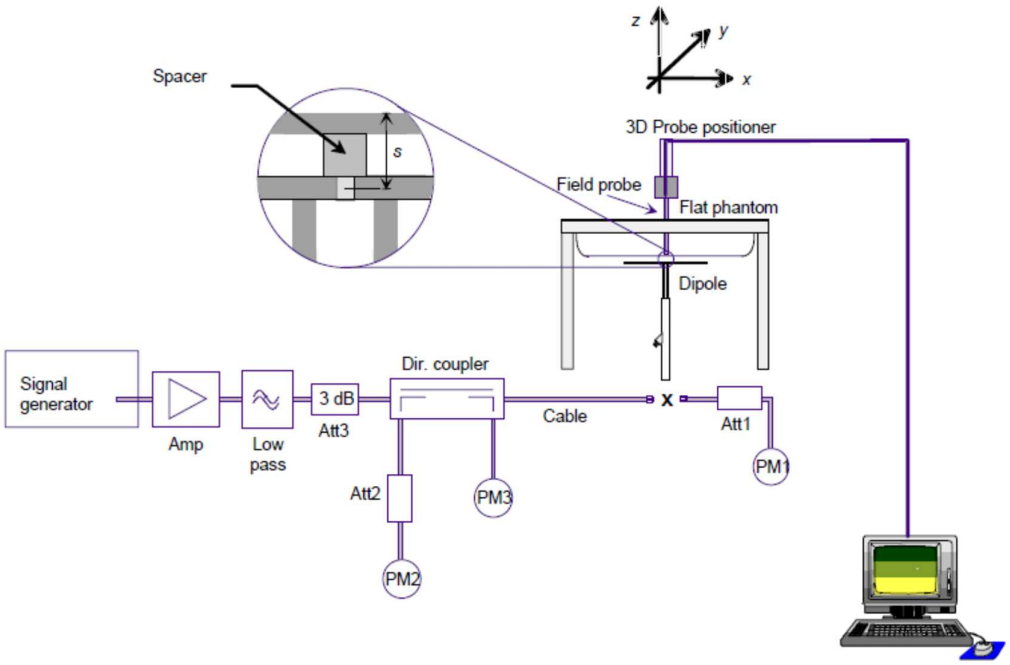

The equipment setup is shown below:

- ✓ Signal Generator
- ✓ Amplifier
- ✓ Directional coupler
- ✓ Power meter
- ✓ Calibrated dipole

First, the power meter PM1 (including attenuator Att1) is connected to the cable to measure the forward power at the location of the connector (x) to the system check source. The signal generator is adjusted for the desired forward power at the connector as read by power meter PM1 after attenuation Att1 and also as coupled through Att2 to PM2. After connecting the cable to the source, the signal generator is readjusted for the same reading at power meter PM2.

SAR results are normalized to a forward power of 1W to compare the values with the calibration reports results as described at IEEE 1528, IEC 62209 and IEC/IEEE 62209-1528:2020 standards.

A.4.2 Liquid Check

The dielectric parameters check is done prior to the use of the tissue simulating liquid. The verification is made by comparing the relative permittivity and conductivity to the values recommended by the applicable standards.

The liquid verification was performed using the following test setup:

- ✓ VNA (Vector Network Analyzer)
- ✓ Open-Short-Load calibration kit
- ✓ RF Cable
- ✓ Open-Ended Coaxial probe
- ✓ DAK software tool
- ✓ SAR Liquid
- ✓ De-ionized water
- ✓ Thermometer

These are the target dielectric properties of the tissue-equivalent liquid material as defined in FCC OET KDB 865664 D01.

Frequency	Body SAR	
(MHz)	ε_r (F/m)	σ (S/m)
150	61.9	0.80
300	58.2	0.92
450	56.7	0.94
835	55.2	0.97
900	55.0	1.05
1450	54.0	1.30
1800-2000	53.3	1.52
2450	52.7	1.95
3000	52.0	2.73
5800	48.2	6.00

(ε_r = relative permittivity, σ = conductivity and ρ = 1000 kg/m3)

The measurement system implement a SAR error compensation algorithm as documented in IEEE Std 1528-2013 and IEC/IEEE 62209-1528:2020 (equivalent to draft standard IEEE P1528-2011) to automatically compensate the measured SAR results for deviations between the measured and required tissue dielectric parameters (applied to only scale up the measured SAR, and not downward) so, according to FCC OET KDB 865664 D01, the tolerance for ε_r and σ may be relaxed to ± 10%.

A.5 Test Equipment List

SAR System2

ID #	Device	Type/Model	Serial Number	Manufacturer	Cal. Date	Cal. Due Date
001-000	6-Axis Robot	TX60 Lspeag	F12/5MZ3A1/A/01	STAÜBLI	NA	NA
001-001	SAM PHANTOM	Twin SAM V5.0	1838	SPEAG	NA	NA
001-002	Light Beam Unit	LB5/80	N/A	Di-soric	NA	NA
001-003	Laptop Holder	N/A	N/A	SPEAG	NA	NA
001-004	Robot Controller	CS8C	F12/5MZ3A1/C/01	STAÜBLI	NA	NA
001-005	Electro Optical Converter	EOC60	1076	SPEAG	NA	NA
002-009	Dosimetric E-Field probe 750-5800MHz	EX3DV4	3978	SPEAG	2022-05-17	2023-05-17
001-017	Data Acquisition Electronics	DAEip	1703	SPEAG	2022-04-28	2023-04-23
001-008	Oval Flat Phantom	ELI V8.0	2059	SPEAG	NA	NA
001-009	Measurement Software	DASY6 V16.0	9-618AE2F1	SPEAG	NA	NA

Shared equipment

ID #	Device	Type/Model	Serial Number	Manufacturer	Cal. Date	Cal. Due Date
123-000	USB Power Sensor	NRP-Z81	102278	R&S	2021-04-13	2023-04-13
124-000	USB Power Sensor	NRP-Z81	102279	R&S	2021-04-13	2023-04-13
099-000	Liquid measurement SW	DAK-3.5 V2.6.0.5	9-2687B491	SPEAG	NA	NA
369-000	Dielectric Probe Kit	DAK-3.5	1309	SPEAG	2021-03-10	2023-03-10
077-000	Coupler	CD0.5-8-20-30	1251-002	Amd-group	2022-08-26	2023-02-26
079-001	RF Cable	CBL-0.5M-SMSM+	226527	Mini-Circuits	2022-12-13	2023-06-13
167-001	RF Cable	CBL-2M-SMSM+	233846	Mini-Circuits	2022-12-13	2023-06-13
126-000	Vector Signal Generator	ESG E4438C	MY45092885	Agilent	2021-05-27	2023-05-27
094-000	Temp & Humidity Logger	RA32E-TH1-RAS	RA32-FBFD5A	AVTECH	2021-07-30	2023-07-30
089-000	Vector Reflectometer R140	PLANAR R140	0190616	R&S	2021-09-02	2023-09-02
084-000	5GHz System Validation Dipole	D5GHzv2	1259	SPEAG	2022-03-17	2023-03-17
070-000	2.4GHz System Validation Dipole	D2450GHzV2	937	SPEAG	2022-05-19	2023-05-19
458-000	Measurement Software	SARA V2.3	NA	Intel	NA	NA
123-000	USB Power Sensor	NRP-Z81	102278	R&S	2021-04-13	2023-04-13
124-000	USB Power Sensor	NRP-Z81	102279	R&S	2021-04-13	2023-04-13

A.5.1 Tissue Simulant Liquid

TSL	Manufacturer / Model	Freq Range (MHz)	Main Ingredients
Body WideBand	SPEAG MBBL600-6000V6 Batch 160630-01	600-6000	Ethanediol, Sodium petroleum sulfonate, Hexylene Glycol / 2-Methyl-pentane-2.4-diol, Alkoxylated alcohol

A.6 Measurement Uncertainty Evaluation

The system uncertainty evaluation is shown in the table below with a coverage factor of k = 2 to indicate a 95% level of confidence:

SPEAG DASY6 Uncertainty Budget According to IEC/IEEE 62209-1528 (4 MHz - 6 GHz) including IEEE 1528-2013 and IEC 62209-1/2016, IEC 62209-2/2010								
Symbol	Error Description	Uncert. Value	Prob Dist.	Div.	(ci) 1g	(ci) 10g	Std Unc. (1g)	Std Unc. (10g)
Measurement System Errors								
CF	*Probe Calibration*	±14.0 %	N	2	1	1	±7.0 %	±7.0 %
CF_{drift}	Probe Calibration Drift	±1.0 %	N	1	1	1	±1.0 %	±1.0 %
LIN	Probe Linearity	±4.7 %	R	√3	1	1	±2.7 %	±2.7 %
BBS	Broadband Signal	±3.0 %	N	2	1	1	±1.5 %	±1.5 %
ISO	*Axial Isotropy*	±4.7 %	R	√3	0.5	0.5	±1.4 %	±1.4 %
ISO	Hemispherical Isotropy	±9.6 %	R	√3	0.5	0.5	±2.8 %	±2.8 %
DAE	Data Acquisition	±0.3 %	N	1	1	1	±0.3 %	±0.3 %
AMB	RF Ambient	±1.8 %	N	1	1	1	±1.8 %	±1.8 %
Δ_{sys}	Probe Positioning	±0.2 %	N	1	0.33	0.33	±0.1 %	±0.1 %
DAT	Data Processing	±2.3 %	N	1	1	1	±2.3 %	±2.3 %
Phantom and Device Errors								
LIQ(σ)	Conductivity (meas.)$_{DAK}$	±2.5 %	N	1	0.78	0.71	±2.0 %	±1.8 %
LIQ(Tσ)	Conductivity (temp.)$_{BB}$	±3.4 %	R	√3	0.78	0.71	±1.5 %	±1.4 %
EPS	Phantom Permittivity	±14.0 %	R	√3	0.25	0.25	±2.0 %	±2.0 %
DAS	Distance DUT - TSL	±2.0 %	N	1	2	2	±4.0 %	±4.0 %
H	Device Holder	±3.6 %	N	1	1	1	±3.6 %	±3.6 %
MOD	DUT Modulation$_m$	±2.4 %	R	√3	1	1	±1.4 %	±1.4 %
TAS	Time-average SAR	±2.6 %	R	√3	1	1	±1.5 %	±1.5 %
RF_{drift}	DUT drift	±5.0 %	N	1	1	1	±2.9 %	±2.9 %
Correction to the SAR results								
C(ε, σ)	Deviation to Target	±1.9 %	N	1	1	0.84	±1.9 %	±1.6 %
Combined Std. Uncertainty							±11.5 %	±11.4 %
Expanded STD Uncertainty							**±23.1 %**	**±22.9 %**

A.7 RF Exposure Limits

SAR assessments have been made in line with the requirements of FCC 47CFR Part 2.1093 and ISED RSS 102 issue 5 on the limitation of exposure of the general population / uncontrolled exposure for portable devices.

Exposure Type	General Population / Uncontrolled Environment
Peak spatial-average SAR (averaged over any 1 gram of tissue)	**1.6 W/kg**
Whole body average SAR	**0.08 W/kg**
Peak spatial-average SAR (extremities) (averaged over any 10 grams of tissue)	**4.0 W/kg**

Annex B. Test Results

The herein test results were performed by:

Test case measurement	Test Personnel
Conducted measurement	F. Heurtematte
SAR measurement	Y.Haddad

B.1 Test Conditions

B.1.1 Test SAR Test positions relative to the phantom

The device under test was an Intel® Wi-Fi AX411 card inside a Notebook PC host platform (P162G) using a set of PIFA and antennas. The card was operated utilizing proprietary software (DRTU version DRTU-02593.22.170.0) and each channel was measured using a broadband power meter to determine the maximum average power.

According to FCC OET KDB 616217 D04, laptop position should be tested for SAR compliance with the display screen opened at an angle of 90° to the keyboard compartment and the notebook bottom surface must be touching the phantom.

Considering the antenna location diagrams in Annex F and the test exclusions described before, the surfaces/edges to be measured for each antenna are:

Antenna	Main	Aux
Position	Laptop	Laptop

See B.1.3.1 for a more detailed list of the applied reductions.

See section F.2 for more information on the tested positions.

For 802.11 transmission modes the device was put into operation by using an own control software to program the test mode required to select the continuous transmission with 100% duty cycle.

The output power of the device was set to transmit at maximum power for all tests.

B.1.2 Test signal, Output power and Test Frequencies

For 802.11 transmission modes the device was put into operation by using an own control software to program the test mode required to select the continuous transmission with 100% duty cycle.

The output power of the device was set to transmit at maximum power for all tests.

B.1.3 Evaluation Exclusion and Test Reductions

B.1.3.1 SAR evaluation exclusion

FCC:

The SAR Test Exclusion Threshold in FCC OET KDB 447498 can be applied to determine SAR test exclusion for adjacent edge configurations. For 100MHz to 6GHz and test separation distances ≤50mm, the 1-g and 10-g SAR test exclusion thresholds are determined by the following formula:

$$[(\text{max. power of channel, including tune} - \text{up tolerance, mW})/(\text{min. test separation distance, mm})] \cdot \left[\sqrt{f_{(GHz)}}\right] \leq 3.0\ for\ 1g\ SAR, and \leq 7.5\ for\ 10g\ extremity\ SAR \quad (1)$$

Where:

- f(GHz) is the RF channel transmit frequency in GHz
- Power and distance are rounded to the nearest mW and mm before calculation
- The result is rounded to one decimal place for comparison
- The values 3.0 and 7.5 are referred to as numeric thresholds

The test exclusions are applicable only when the minimum test separation distance is ≤ 50 mm, and for transmission frequencies between 100 MHz and 6 GHz. When the minimum test separation distance is < 5 mm, a distance of 5 mm is applied to determine SAR test exclusion.

For test separation distances > 50 mm, the 1-g and 10-g SAR test exclusion thresholds are determined using the following formulas:

$$\langle(Power\ allowed\ at\ numeric\ threshold\ for\ 50\ mm\ in\ (1)) + (test\ separation\ distance - 50\ mm) \cdot (f_{MHz}/150)\rangle mW,\ for\ 100MHz\ to\ 1500MHz \quad (2)$$

$$\langle(Power\ allowed\ at\ numeric\ threshold\ for\ 50\ mm\ in\ (1)) + (test\ separation\ distance - 50\ mm) \cdot 10)\rangle mW,\ for\ 1500MHz\ and\ \leq 6GHz \quad (3)$$

ISED:

According to RSS-102 section 2.5.1, SAR evaluation is required if the separation distance between the user and/or bystander and the antenna and/or radiating element of the device is less than or equal to 20 cm, except when the device operates at or below the applicable output power level (adjusted for tune-up tolerance) for the specified separation distance defined in Table below:

SAR evaluation — Exemption limits for routine evaluation based on frequency and separation distance					
Frequency	Exemption Limits (mW)				
(MHz)	At separation distance of ≤5 mm	At separation distance of 10 mm	At separation distance of 15 mm	At separation distance of 20 mm	At separation distance of 25 mm
≤300	71 mW	101 mW	132 mW	162 mW	193 mW
450	52 mW	70 mW	88 mW	106 mW	123 mW
835	17 mW	30 mW	42 mW	55 mW	67 mW
1900	7 mW	10 mW	18 mW	34 mW	60 mW
2450	4 mW	7 mW	15 mW	30 mW	52 mW
3500	2 mW	6 mW	16 mW	32 mW	55 mW
5800	1 mW	6 mW	15 mW	27 mW	41 mW
Frequency	Exemption Limits (mW)				
(MHz)	At separation distance of 30 mm	At separation distance of 35 mm	At separation distance of 40 mm	At separation distance of 45 mm	At separation distance of ≥50 mm
≤300	223 mW	254 mW	284 mW	315 mW	345 mW
450	141 mW	159 mW	177 mW	195 mW	213 mW
835	80 mW	92 mW	105 mW	117 mW	130 mW
1900	99 mW	153 mW	225 mW	316 mW	431 mW
2450	83 mW	123 mW	173 mW	235 mW	309 mW
3500	86 mW	124 mW	170 mW	225 mW	290 mW
5800	56 mW	71 mW	85 mW	97 mW	106 mW

LAN Antenna	Band Name	Max output power		Laptop		Laptop
		dBm	**mW**			
WLAN Main	DTS	19.00	79.43	**<50**		T
	U-NII-1	18.00	63.10	**<50**		R
	U-NII-2A	18.00	63.10	**<50**		T
	U-NII-2C	17.50	56.23	**<50**		T
	U-NII-3	21.00	125.89	**<50**		T
WLAN Aux	DTS	18.50	70.80	**<50**		T
	U-NII-1	19.00	79.43	**<50**		R
	U-NII-2A	19.00	79.43	**<50**		T
	U-NII-2C	17.50	56.23	**<50**		T
	U-NII-3	21.00	125.89	**<50**		T
	BT	10.50	11.22	**<50**		T

T: Tested position
R: Reduced

See Annex F for a more detailed explanation of the separation distance related to the platform.

B.1.3.2 General SAR test reduction

According to FCC OET KDB 447498, testing of other required channels within the operating mode of a frequency band is not required when the reported 1-g or 10-g SAR for the mid-band or highest output power channel is:

- ≤ 0.8 W/kg or 2.0 W/kg, for 1-g or 10-g respectively, when the transmission band is ≤ 100 MHz
- ≤ 0.6 W/kg or 1.5 W/kg, for 1-g or 10-g respectively, when the transmission band is between 100 MHz and 200 MHz
- ≤ 0.4 W/kg or 1.0 W/kg, for 1-g or 10-g respectively, when the transmission band is ≥ 200 MHz

WLAN SAR Test reduction

Transmission Mode	SAR test exclusion/reduction
DSSS	According to FCC OET KDB 248227 D01, SAR is measured for 2.4 GHz 802.11b, SAR test reduction is determined according to the following: ▪ When the reported SAR of the highest measured maximum output power channel for the exposure configuration is ≤ 0.8 W/kg, no further SAR testing is required for 802.11b DSSS in that exposure configuration. ▪ When the reported SAR is > 0.8 W/kg, SAR is required for that exposure configuration using the next highest measured output power channel. When any reported SAR is > 1.2 W/kg, SAR is required for the third channel. According to FCC OET KDB 248227 D01, SAR is not required for 2.4 GHz OFDM conditions when the highest reported SAR for DSSS is adjusted by the ratio of OFDM to DSSS specified maximum output power and the adjusted SAR is ≤ 1.2 W/kg.
OFDM	According to FCC OET KDB 248227 D01, 802.11a/g/n/ac modes have the same specified maximum output power, largest channel bandwidth, lowest order modulation and lowest data rate, the lowest order 802.11 mode is selected; i.e., 802.11a is chosen over 802.11n then 802.11ac or 802.11g is chosen over 802.11n. According to FCC OET KDB 248227 D01, an *initial test configuration* is determined for OFDM and DSSS transmission modes according to the channel bandwidth, modulation and data rate combination(s) with the highest maximum output power specified for production units in each standalone and aggregated frequency band. SAR is measured using the highest measured maximum output power channel. SAR test reduction for subsequent highest output test channels is determined according to reported SAR of the initial test configuration. The *initial test configuration* for 5 GHz OFDM transmission modes is determined by the 802.11 configuration with the highest maximum output power specified for production units, including tune-up tolerance, in each standalone and aggregated frequency band. SAR for the initial test configuration is measured using the highest maximum output power channel determined by the default power measurement procedures. According to FCC OET KDB 248227 D01, when the reported SAR of the initial test configuration is > 0.8 W/kg, SAR measurement is required for subsequent next highest measured output power channel(s) in the initial test configuration until reported SAR is ≤ 1.2 W/kg or all required channels are tested.

B.2 Conducted Power Measurements

B.2.1 WLAN 2.4GHz

Band	Mode	Data Rate	Ch#	Freq (MHz)	Avg. Pwr. (dBm) Main	Tune-up Pwr (dBm)	Avg. Pwr. (dBm) Aux	Tune-up Pwr (dBm)
DTS	802.11b	1	1	2412	NR	18.75	18.34	18.50
			6	2437	18.97	19.00	18.02	18.50
			11	2462	NR	18.75	18.38	18.50
	802.11g	6	1	2412	NR	18.50	NR	18.50
			6	2437	NR	19.00	NR	18.50
			11	2462	NR	16.75	NR	18.50
	802.11n20	HT0	1	2412	NR	18.50	NR	18.50
			6	2437	NR	19.00	NR	18.50
			11	2462	NR	16.75	NR	18.50
	802.11ax20	MCS0	1	2412	NR	18.50	NR	18.50
			6	2437	NR	19.00	NR	18.50
			11	2462	NR	16.75	NR	18.50
	802.11n40	HT0	3	2422	NR	14.00	NR	16.00
			6	2437	NR	16.75	NR	17.00
			9	2452	NR	16.75	NR	17.00
	802.11ax40	MCS0	3	2422	NR	14.00	NR	16.00
			6	2437	NR	16.75	NR	17.00
			9	2452	NR	16.75	NR	17.00

Initial test configuration

1. NR: Not Required
2. As per FCC OET KDB 248227 D01, conducted output power and SAR testing are not required for 802.11g/n/ax channels when the highest reported SAR for DSSS is adjusted by the ratio of OFDM to DSSS specified maximum output power and the adjusted SAR is ≤ 1.2W/kg.
3. When the reported SAR of the initial test configuration is > 0.8 W/kg, SAR measurement is required for subsequent next highest measured output power channel(s) in the initial test configuration until reported SAR is ≤ 1.2 W/kg or all required channels are tested.

B.2.2 WLAN 5GHz (U-NII)

B.2.2.1 5.2GHz and 5.3GHz (U-NII-1 and U-NII-2A)

Band	Mode	Data Rate	Ch#	Freq (MHz)	Avg. Pwr. (dBm) Main	Tune-up Pwr (dBm)	Avg. Pwr. (dBm) Aux	Tune-up Pwr (dBm)
UNII-1	802.11a20	6	36	5180	NR	18.00	NR	19.00
			40	5200	NR	18.00	NR	19.00
			44	5220	NR	18.00	NR	19.00
			48	5240	NR	18.00	NR	19.00
	802.11n20	HT0	36	5180	NR	18.00	NR	19.00
			40	5200	NR	18.00	NR	19.00
			44	5220	NR	18.00	NR	19.00
			48	5240	NR	18.00	NR	19.00
	802.11ax20	MCS0	36	5180	NR	18.00	NR	19.00
			40	5200	NR	18.00	NR	19.00
			44	5220	NR	18.00	NR	19.00
			48	5240	NR	18.00	NR	19.00
	802.11n40	HT0	38	5190	NR	18.00	NR	18.25
			46	5230	NR	18.00	NR	19.00
	802.11ax40	MCS0	38	5190	NR	18.00	NR	18.25
			46	5230	NR	18.00	NR	19.00
	802.11ac80	VHT0	42	5210	NR	17.50	NR	17.50
	802.11ax80	MCS0	42	5210	NR	17.50	NR	17.50

1. NR: Not Required
2. When the same maximum output power is specified for both bands, begin SAR measurement in U-NII-2A band by applying the OFDM SAR requirements. If the highest reported SAR for a test configuration is ≤ 1.2 W/kg, SAR is not required for U-NII-1 band (see §B.5.2 in this document).
3. Additional conducted power measurement is required when reported SAR is > 1.2W/kg. In case the subsequent test configuration and the channel bandwidth is smaller than the initial test configuration, all channels that overlap with the larger channel bandwidth in the initial configuration should be tested.
4. The initial test configuration for 2.4 GHz and 5 GHz OFDM transmission modes is determined by the 802.11 configuration with the highest maximum output power specified for production units, including tune-up tolerance, in each standalone and aggregated frequency band. SAR for the initial test configuration is measured using the highest maximum output power channel determined by the default power measurement procedures. When multiple transmission modes (802.11a/g/n/ac) have the same specified maximum output power, largest channel bandwidth, highest order modulation and highest data rate, highest order 802.11 mode is selected (i.e. a, g, n, ac then ax)
5. When the reported SAR of the initial test configuration is > 0.8W/kg, SAR measurement is required for the subsequent next highest measured output power channel(s) in the initial test configuration until reported SAR is =1.2W/kg or all required channels are tested.
6. When the highest reported SAR for the initial test configuration (when applicable, include subsequent highest output channels), according to the initial test position or fixed exposure requirements, is adjusted by the ratio of the subsequent test configuration to the initial test configuration specified maximum output power and the adjusted SAR is ≤1.2 W/Kg, SAR is not required for that subsequent test configuration
7. SAR for subsequent highest measured maximum output power channels in the subsequent test configuration is required only when the reported SAR of the preceding higher maximum output power channel(s) in the subsequent test configuration is >1.2 W/Kg or until all required channels are tested.

Band	Mode	Data Rate	Ch#	Freq (MHz)	Avg. Pwr. (dBm) Main	Tune-up Pwr (dBm)	Avg. Pwr. (dBm) Aux	Tune-up Pwr(dBm)
UNII-2A	802.11a20	6	52	5260	NR	18.00	NR	19.00
			56	5280	NR	18.00	NR	19.00
			60	5300	NR	18.00	NR	19.00
			64	5320	NR	18.00	NR	19.00
	802.11n20	HT0	52	5260	NR	18.00	NR	19.00
			56	5280	NR	18.00	NR	19.00
			60	5300	NR	18.00	NR	19.00
			64	5320	NR	18.00	NR	19.00
	802.11ax20	MCS0	52	5260	NR	18.00	NR	19.00
			56	5280	NR	18.00	NR	19.00
			60	5300	NR	18.00	NR	19.00
			64	5320	NR	18.00	NR	19.00
	802.11n40	HT0	54	5270	NR	18.00	18.97	19.00
			62	5310	NR	17.25	NR	17.75
	802.11ax40	MCS0	54	5270	NR	18.00	NR	19.00
			62	5310	NR	17.25	NR	17.75
	802.11ac80	VHT0	58	5290	17.85	18.00	NR	17.75
	802.11ax80	MCS0	58	5290	17.28	18.00	NR	17.75
	802.11ac160	VHT0	50	5250	NR	14.00	NR	14.50
	802.11ax160	MCS0	50	5250	NR	14.00	NR	14.50

Initial test configuration

1. NR: Not Required
2. The initial test configuration for 2.4 GHz and 5 GHz OFDM transmission modes is determined by the 802.11 configuration with the highest maximum output power specified for production units, including tune-up tolerance, in each standalone and aggregated frequency band. SAR for the initial test configuration is measured using the highest maximum output power channel determined by the default power measurement procedures. When multiple transmission modes (802.11a/g/n/ac) have the same specified maximum output power, largest channel bandwidth, highest order modulation and highest data rate, highest order 802.11 mode is selected (i.e. a, g, n, ac then ax)
3. Additional conducted power measurement is required when reported SAR is > 1.2W/kg. In case the subsequent test configuration and the channel bandwidth is smaller than the initial test configuration, all channels that overlap with the larger channel bandwidth in the initial configuration should be tested.
4. When the reported SAR of the initial test configuration is > 0.8W/kg, SAR measurement is required for the subsequent next highest measured output power channel(s) in the initial test configuration until reported SAR is ≤1.2W/kg or all required channels are tested.
5. When the highest reported SAR for the initial test configuration (when applicable, include subsequent highest output channels), according to the initial test position or fixed exposure requirements, is adjusted by the ratio of the subsequent test configuration to the initial test configuration specified maximum output power and the adjusted SAR is ≤1.2 W/Kg, SAR is not required for that subsequent test configuration.
6. SAR for subsequent highest measured maximum output power channels in the subsequent test configuration is required only when the reported SAR of the preceding higher maximum output power channel(s) in the subsequent test configuration is >1.2 W/Kg or until all required channels are tested.

B.2.2.2 5.6 (U-NII-2C)

Band	Mode	Data Rate	Ch#	Freq (MHz)	Avg. Pwr. (dBm) Main	Tune-up Pwr (dBm)	Avg. Pwr. (dBm) Aux	Tune-up Pwr (dBm)
UNII-2C	802.11a20	6	100	5500	NR	17.50	NR	17.50
			104	5520	NR	17.50	NR	17.50
			108	5540	NR	17.50	NR	17.50
			112	5560	NR	17.50	NR	17.50
			116	5580	NR	17.50	NR	17.50
			120	5600	NR	17.50	NR	17.50
			124	5620	NR	17.50	NR	17.50
			128	5640	NR	17.50	NR	17.50
	802.11n20	HT0	100	5500	NR	17.50	NR	17.50
			104	5520	NR	17.50	NR	17.50
			108	5540	NR	17.50	NR	17.50
			112	5560	NR	17.50	NR	17.50
			116	5580	NR	17.50	NR	17.50
			120	5600	NR	17.50	NR	17.50
			124	5620	NR	17.50	NR	17.50
			128	5640	NR	17.50	NR	17.50
	802.11ax20	MCS0	100	5500	NR	17.50	NR	17.50
			104	5520	NR	17.50	NR	17.50
			108	5540	NR	17.50	NR	17.50
			112	5560	NR	17.50	NR	17.50
			116	5580	NR	17.50	NR	17.50
			120	5600	NR	17.50	NR	17.50
			124	5620	NR	17.50	NR	17.50
			128	5640	NR	17.50	NR	17.50
	802.11n40	HT0	102	5510	NR	17.50	NR	17.50
			110	5550	NR	17.50	NR	17.50
			118	5590	NR	17.50	NR	17.50
			126	5630	NR	17.50	NR	17.50
	802.11ax40	MCS0	102	5510	NR	17.50	NR	17.50
			110	5550	NR	17.50	NR	17.50
			118	5590	NR	17.50	NR	17.50
			126	5630	NR	17.50	NR	17.50
	802.11ac80	VHT0	106	5530	17.24	17.50	16.54	17.50
			122	5610	17.22	17.50	16.86	17.50
	802.11ax80	MCS0	106	5530	NR	17.50	NR	17.50
			122	5610	NR	17.50	NR	17.50
	802.11ac160	VHT0	114	5570	NR	15.00	NR	15.00
	802.11ax160	MCS0	114	5570	NR	15.00	NR	15.00

Initial test configuration

1. NR: Not Required
2. When band gap channels between U-NII-2C and U-NII-3 band are supported channels in U-NII-2C band below 5.65 GHz are considered as one band and channels above 5.65 GHz, together with channels in 5.8 GHz U-NII-3 or §15.247 band, are considered as a separate band
3. Additional conducted power measurement is required when reported SAR is > 1.2W/kg. In case the subsequent test configuration and the channel bandwidth is smaller than the initial test configuration, all channels that overlap with the larger channel bandwidth in the initial configuration should be tested
4. The initial test configuration for 2.4 GHz and 5 GHz OFDM transmission modes is determined by the 802.11 configuration with the highest maximum output power specified for production units, including tune-up tolerance, in each standalone and aggregated frequency band. SAR for the initial test configuration is measured using the highest maximum output power channel determined by the default power measurement procedures. When multiple transmission modes (802.11a/g/n/ac) have the same specified maximum output power, largest channel bandwidth, highest order modulation and highest data rate, highest order 802.11 mode is selected (i.e. a, g, n, ac then ax)
5. When the reported SAR of the initial test configuration is > 0.8W/kg, SAR measurement is required for the subsequent next highest measured output power channel(s) in the initial test configuration until reported SAR is ≤1.2W/kg or all required channels are tested.
6. When the highest reported SAR for the initial test configuration (when applicable, include subsequent highest output channels), according to the initial test position or fixed exposure requirements, is adjusted by the ratio of the subsequent test configuration to the initial test configuration specified maximum output power and the adjusted SAR is≤1.2 W/Kg, SAR is not required for that subsequent test configuration.
7. SAR for subsequent highest measured maximum output power channels in the subsequent test configuration is required only when the reported SAR of the preceding higher maximum output power channel(s) in the subsequent test configuration is >1.2 W/Kg or until all required channels are tested.

B.2.2.3 5.8GHz (U-NII-3)

Band	Mode	Data Rate	Ch#	Freq (MHz)	Avg. Pwr. (dBm) Main	Tune-up Pwr (dBm)	Avg. Pwr. (dBm) Aux	Tune-up Pwr (dBm)
UNII-3	802.11a	6	132	5660	NR	17.50	NR	17.50
			136	5680	NR	17.50	NR	17.50
			140	5700	NR	17.50	NR	17.50
			144	5720	NR	N/A	NR	NA
			149	5745	NR	21.00	NR	21.00
			153	5765	NR	21.00	NR	21.00
			157	5785	NR	21.00	NR	21.00
			161	5805	NR	21.00	NR	21.00
			165	5825	NR	21.00	NR	21.00
	802.11n20	HT0	132	5660	NR	17.50	NR	17.50
			136	5680	NR	17.50	NR	17.50
			140	5700	NR	17.50	NR	17.50
			144	5720	NR	N/A	NR	NA
			149	5745	NR	21.00	NR	21.00
			153	5765	NR	21.00	NR	21.00
			157	5785	NR	21.00	NR	21.00
			161	5805	NR	21.00	NR	21.00
			165	5825	NR	21.00	NR	21.00
	802.11ax20	MCS0	132	5660	NR	17.50	NR	17.50
			136	5680	NR	17.50	NR	17.50
			140	5700	NR	17.50	NR	17.50
			144	5720	NR	N/A	NR	NA
			149	5745	NR	21.00	NR	21.00
			153	5765	NR	21.00	NR	21.00
			157	5785	NR	21.00	NR	21.00
			161	5805	NR	21.00	NR	21.00
			165	5825	NR	21.00	NR	21.00
	802.11n40	HT0	134	5670	NR	17.50	NR	17.50
			142	5710	NR	N/A	NR	N/A
			151	5755	NR	21.00	NR	21.00
			159	5795	NR	21.00	NR	21.00
	802.11ax40	MCS0	134	5670	NR	17.50	NR	17.50
			142	5710	NR	N/A	NR	N/A
			151	5755	NR	21.00	NR	21.00
			159	5795	NR	21.00	NR	21.00
	802.11ac80	VHT0	138	5690	NR	N/A	NR	N/A
			155	5775	20.57	21.00	20.71	21.00
	802.11ax80	MCS0	138	5690	NR	N/A	NR	N/A
			155	5775	NR	21.00	NR	21.00

Initial test configuration

1. NR: Not Required
2. When band gap channels between U-NII-2C and U-NII-3 band are supported channels in U-NII-2C band below 5.65 GHz are considered as one band and channels above 5.65 GHz, together with channels in 5.8 GHz U-NII-3 or §15.247 band, are considered as a separate band
3. Additional conducted power measurement is required when reported SAR is > 1.2W/kg. In case the subsequent test configuration and the channel bandwidth is smaller than the initial test configuration, all channels that overlap with the larger channel bandwidth in the initial configuration should be tested
4. The initial test configuration for 2.4 GHz and 5 GHz OFDM transmission modes is determined by the 802.11 configuration with the highest maximum output power specified for production units, including tune-up tolerance, in each standalone and aggregated frequency band. SAR for the initial test configuration is measured using the highest maximum output power channel determined by the default power measurement procedures. When multiple transmission modes (802.11a/g/n/ac) have the same specified maximum output power, largest channel bandwidth, highest order modulation and highest data rate, highest order 802.11 mode is selected (i.e. a, g, n, ac then ax)
5. When the reported SAR of the initial test configuration is > 0.8W/kg, SAR measurement is required for the subsequent next highest measured output power channel(s) in the initial test configuration until reported SAR is ≤1.2W/kg or all required channels are tested.
6. When the highest reported SAR for the initial test configuration (when applicable, include subsequent highest output channels), according to the initial test position or fixed exposure requirements, is adjusted by the ratio of the subsequent test configuration to the initial test configuration specified maximum output power and the adjusted SAR is ≤1.2 W/Kg, SAR is not required for that subsequent test configuration.
7. SAR for subsequent highest measured maximum output power channels in the subsequent test configuration is required only when the reported SAR of the preceding higher maximum output power channel(s) in the subsequent test configuration is >1.2 W/Kg or until all required channels are tested.

B.2.3 Bluetooth

Band	Mode	Data Rate	Channel	Frequency (MHz)	Avg. Pwr. (dBm) Aux	Tune-up Pwr (dBm)
2.4 GHz (BT)	Bluetooth v5.2	Basic rate GFSK	0	2402	10.35	10.50
			39	2441	10.35	10.50
			78	2480	10.39	10.50
		Basic rate π/4 DQPSK	0	2402	NR	9.50
			39	2441	NR	9.50
			78	2480	NR	9.50
		Basic rate 8-DPSK	0	2402	NR	9.50
			39	2441	NR	9.50
			78	2480	NR	9.50
	BLE	Low energy GFSK	0	2402	NR	9.50
			39	2441	NR	9.50
			78	2480	NR	9.50

Initial test configuration

1. NR: Not Required

B.3 Tissue Parameters Measurement

Freq.(MHz)	Target Parameters		Measured TSLParameters		Deviation (%)		Date
	ε'(F/m)	σ(S/m)	ε'(F/m)	σ(S/m)	Deviation ε'	Deviation σ	
2450	52.7	1.95	50.56	2.06	-4.06	5.64	2023-02-16
5300	48.88	5.42	48.23	5.52	-1.33	1.85	2023-03-06
5500	48.61	5.65	47.90	5.81	-0.01	-0.03	2023-03-06
5600	48.47	5.77	44.8	5.91	-7.57	2.43	2023-03-06
5800	48.2	6.0	44.33	6.16	-8.03	2.67	2023-02-16

See Annex D for more details.

B.4 System Check Measurements

Frequency (MHz)	Average	Target SAR (W/kg)	Measured SAR (W/kg)	Deviation to target (%)	Forwarded Power(mW)	Deviation Limit (%)	Date
2450	1g	50.80	48.90	-3.74	50.00	± 10	2023-02-16
	10g	24.20	23.20	-4.13			
5300	1g	75.00	72.80	-2.93			2023-03-06
	10g	20.50	21.80	6.34			
5500	1g	80.80	73.20	-9.41			2023-03-06
	10g	21.90	22.60	3.20			
5600	1g	78.60	77.60	-1.27			2023-03-06
	10g	21.50	23.60	9.77			
5800	1g	74.80	70.60	-5.61			2023-02-16
	10g	20.20	21.40	5.94			

See Annex C for more details.

B.5 SAR Test Results

B.5.1 Bluetooth & 802.11b/g/n/ax – 2.4GHz – DTS

Antenna	Mode	Data rate	BW (MHz)	Channel Number	Freq (MHz)	Scaling Factor (dB)	Measured SAR 1g (W/kg)	Reported SAR 1g (W/kg)	Plot #
Aux	802.15	DH5	1	78	2402	0.11	0.02	0.02	
Main	802.11b	1Mbps	20	11	2462	0.01	0.25	0.25	**1**
Aux				6	2437	0.12	0.11	0.12	

B.5.2 802.11a/n/ac/ax – 5.3 GHz – U-NII-2A

Antenna	Mode	Data rate	BW (MHz)	Channel Number	Freq (MHz)	Scaling Factor (dB)	Measured SAR 1g (W/kg)	Reported SAR 1g (W/kg)	Plot #
Main	802.11ac	VHT0	80	58	5290	0.15	0.26	0.27	2
Aux	802.11n	HT0	40	54	5270	0.03	0.23	0.23	

B.5.3 802.11a/n/ac/ax – 5.6 GHz – U-NII-2C

Antenna	Mode	Data rate	BW (MHz)	Channel Number	Freq (MHz)	Scaling Factor (dB)	Measured SAR 1g (W/kg)	Reported SAR 1g (W/kg)	Plot #
Main	802.11ac	VHT0	80	106	5530	0.26	0.29	0.30	3
Aux				122	5610	0.64	0.19	0.22	

B.5.4 802.11a/n/ac/ax – 5.8 GHz – U-NII-3

Antenna	Mode	Data rate	BW (MHz)	Channel Number	Freq (MHz)	Scaling Factor (dB)	Measured SAR 1g (W/kg)	Reported SAR 1g (W/kg)	Plot #
Main	802.11ac	VHT0	80	155	5775	0.43	0.34	0.38	**4**
Aux						0.29	0.33	0.35	

B.5.5 SAR Measurement Variability

According to FCC OET KDB 865664, SAR Measurement variability is assessed when the maximum initial measured SAR is >=0.8 W/kg for a certain band/mode.
As all measured SAR results are below 0.8W/kg, therefore SAR variability is not required.

B.5.6 Simultaneous Transmission SAR Evaluation

According to FCC OET KDB 447498, when the sum of 1g SAR for all simultaneously transmitting antennas in an operating mode and exposure condition combination is within the SAR limit, SAR test exclusion applies to that simultaneous transmission configuration.

All the values stated in the table below are the worst case found for standalone measurement with disregard of the transmission mode or channel where the worst case was found

Antenna	Position	Highest Reported SAR (1g) (W/kg)		
		WLAN 2.4GHz	WLAN 5GHz	Bluetooth
Main	Laptop	0.25	0.38	
Aux	Laptop	0.12	0.35	0.02

*According to FCC OET KDB 447498, when standalone test exclusion is applied to an antenna that transmits simultaneously with other antennas, the standalone SAR must be estimated to 0.4 W/Kg for 1-g SAR when the test separation is > 50mm in order to determine simultaneous transmission test exclusion.

Position	Simultaneous Tx Antenna Combination		Σ SAR 1g (W/kg)	Limit (W/kg)
	Main Antenna	Aux Antenna		
Laptop	WLAN 5GHz	WLAN 5GHz + BT	0.75	1.6
	WLAN 2.4GHz	WLAN 2.4GHz	0.37	
	WLAN 2.4GHz	BT	0.27	
	WLAN 5GHz	WLAN 2.4GHz	0.50	
	WLAN 2.4GHz	WLAN 5GHz + BT	0.62	
	WLAN 2.4GHz + 5GHz	BT	0.65	
	WLAN 2.4GHz + 5GHz	-	0.63	
	-	WLAN 2.4GHz + 5GHz	0.47	
	WLAN 2.4GHz + 5GHz	WLAN 2.4GHz + 5GHz	1.07	

Considering the results described above and according to the simultaneous transmission evaluation exclusions described in FCC OET KDB 447498, no enlarged zoom scan measurements are required.

Annex C. Test System Plots

1. DTS - 802.11b, CH11, Main Antenna 35
2. U-NII-2A - 802.11ac80 CH58, Main Antenna 36
3. U-NII-2C - 802.11ac80, CH106, Main Antenna 37
4. U-NII-3 - 802.11ac80, CH155, Main Antenna 38
5. System Check Body Liquid 2450MHz 39
6. System Check Body Liquid 5300MHz 40
7. System Check Body Liquid 5500MHz 41
8. System Check Body Liquid 5600MHz 42
9. System Check Body Liquid 5800MHz 43

1. DTS - 802.11b, CH11, Main Antenna

Device under Test Properties

Model, Manufacturer	Dimensions [mm]	S/N	DUT Type
P162G ,Dell	320.0 x 220.0 x 17.0	7481208000001	Notebook

Exposure Conditions

Phantom Section, TSL	Position, Test Distance [mm]	Band	Group, UID	Frequency [MHz], Channel Number	Conversion Factor	TSL Conductivity [S/m]	TSL Permittivity
Flat, MSL	LAPTOP, 0.00	WLAN 2.4GHz	WLAN, 10415-AAA	2462.0, 11	7.39	2.07	50.5

Hardware Setup

Phantom	TSL, Measured Date	Probe, Calibration Date	DAE, Calibration Date
ELI V8.0 (20deg probe tilt)	MBBL-600-6000, 2023-Feb-16	EX3DV4 - SN3978, 2022-05-17	DAE4ip Sn1703, 2022-04-28

Scan Setup

	Area Scan	Zoom Scan
Grid Extents [mm]	100.0 x 100.0	30.0 x 30.0 x 30.0
Grid Steps [mm]	10.0 x 10.0	5.0 x 5.0 x 1.5
Sensor Surface [mm]	3.0	1.4
Graded Grid	Yes	Yes
Grading Ratio	1.5	1.5
MAIA	Confirmed by MAIA	Confirmed by MAIA
Surface Detection	VMS + 6p	VMS + 6p
Scan Method	Measured	Measured

Measurement Results

	Area Scan	Zoom Scan
Date	2023-02-16, 12:46	2023-02-16, 12:55
psSAR1g [W/Kg]	0.271	0.248
psSAR10g [W/Kg]	0.120	0.108
Power Drift [dB]	-0.11	-0.05
Power Scaling	Disabled	Disabled
Scaling Factor [dB]		
TSL Correction	Positive Only	Positive Only
M2/M1 [%]		73.8
Dist 3dB Peak [mm]		5.7

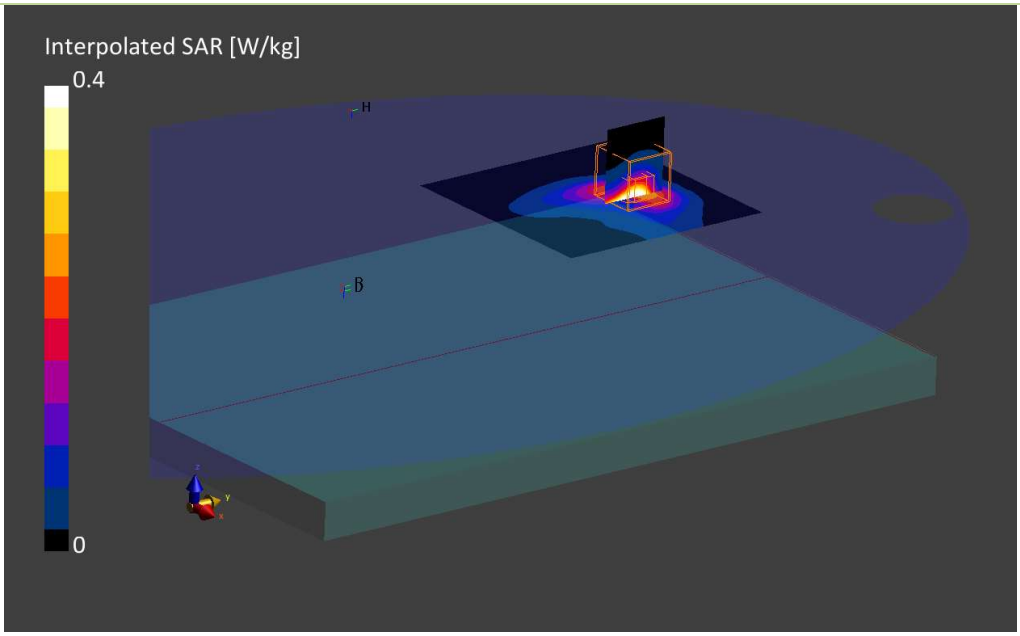

2. U-NII-2A - 802.11ac80 CH58, Main Antenna

Device under Test Properties

Model, Manufacturer	Dimensions [mm]	S/N	DUT Type
P162G ,Dell	320.0 x 220.0 x 17.0	7481208000001	Notebook

Exposure Conditions

Phantom Section, TSL	Position, Test Distance [mm]	Band	Group, UID	Frequency [MHz], Channel Number	Conversion Factor	TSL Conductivity [S/m]	TSL Permittivity
Flat, MSL	LAPTOP, 0.00	WLAN 5GHz	WLAN, 10456-AAC	5290.0, 58	4.1	5.50	48.2

Hardware Setup

Phantom	TSL, Measured Date	Probe, Calibration Date	DAE, Calibration Date
ELI V8.0 (20deg probe tilt)	MBBL-600-6000, 2023-Mar-06	EX3DV4 - SN3978, 2022-05-17	DAE4ip Sn1703, 2022-04-28

Scan Setup

	Area Scan	Zoom Scan
Grid Extents [mm]	120.0 x 120.0	22.0 x 22.0 x 22.0
Grid Steps [mm]	10.0 x 10.0	4.0 x 4.0 x 1.4
Sensor Surface [mm]	3.0	1.4
Graded Grid	Yes	Yes
Grading Ratio	1.5	1.4
MAIA	Confirmed by MAIA	Confirmed by MAIA
Surface Detection	VMS + 6p	VMS + 6p
Scan Method	Measured	Measured

Measurement Results

	Area Scan	Zoom Scan
Date	2023-03-07, 09:24	2023-03-07, 09:33
psSAR1g [W/Kg]	0.235	0.264
psSAR10g [W/Kg]	0.092	0.130
Power Drift [dB]	0.09	-0.08
Power Scaling	Disabled	Disabled
Scaling Factor [dB]		
TSL Correction	Positive Only	Positive Only
M2/M1 [%]		72.1
Dist 3dB Peak [mm]		8.2

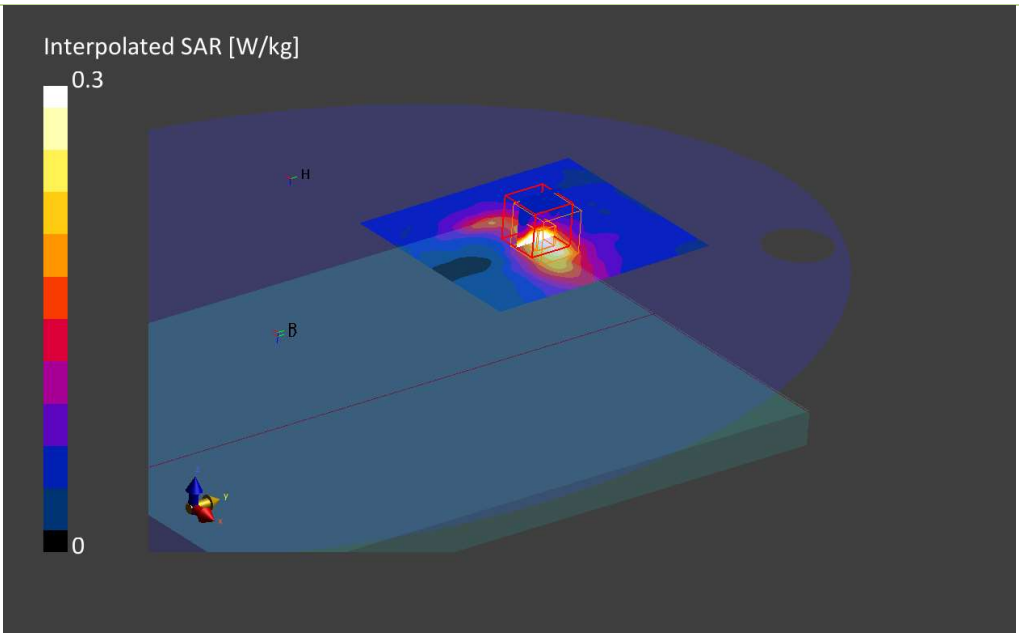

3. U-NII-2C - 802.11ac80, CH106, Main Antenna

Device under Test Properties

Model, Manufacturer	Dimensions [mm]	S/N	DUT Type
P162G, Dell	320.0 x 220.0 x 17.0	7481208000001	Notebook

Exposure Conditions

Phantom Section, TSL	Position, Test Distance [mm]	Band	Group, UID	Frequency [MHz], Channel Number	Conversion Factor	TSL Conductivity [S/m]	TSL Permittivity
Flat, MSL	LAPTOP, 0.00	WLAN 5GHz	WLAN, 10402-AAE	5530.0, 106	3.85	5.85	47.9

Hardware Setup

Phantom	TSL, Measured Date	Probe, Calibration Date	DAE, Calibration Date
ELI V8.0 (20deg probe tilt)	MBBL-600-6000, 2023-Mar-06	EX3DV4 - SN3978, 2022-05-17	DAE4ip Sn1703, 2022-04-28

Scan Setup

	Area Scan	Zoom Scan
Grid Extents [mm]	100.0 x 120.0	22.0 x 22.0 x 22.0
Grid Steps [mm]	10.0 x 10.0	4.0 x 4.0 x 1.4
Sensor Surface [mm]	3.0	1.4
Graded Grid	Yes	Yes
Grading Ratio	1.5	1.4
MAIA	Confirmed by MAIA	Confirmed by MAIA
Surface Detection	VMS + 6p	VMS + 6p
Scan Method	Measured	Measured

Measurement Results

	Area Scan	Zoom Scan
Date	2023-03-07, 09:51	2023-03-07, 10:00
psSAR1g [W/Kg]	0.211	0.285
psSAR10g [W/Kg]	0.083	0.152
Power Drift [dB]	-0.04	-0.09
Power Scaling	Disabled	Disabled
Scaling Factor [dB]		
TSL Correction	Positive Only	Positive Only
M2/M1 [%]		70.0
Dist 3dB Peak [mm]		8.2

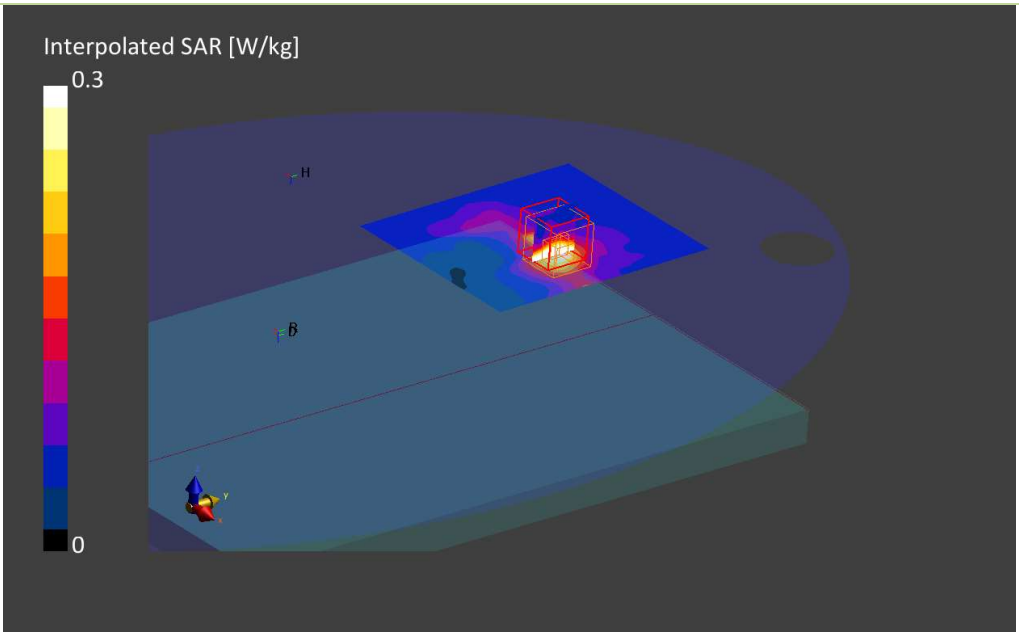

4. U-NII-3 - 802.11ac80, CH155, Main Antenna

Device under Test Properties

Model, Manufacturer	Dimensions [mm]	S/N	DUT Type
P162G ,Dell	320.0 x 220.0 x 17.0	7481208000001	Notebook

Exposure Conditions

Phantom Section, TSL	Position, Test Distance [mm]	Band	Group, UID	Frequency [MHz], Channel Number	Conversion Factor	TSL Conductivity [S/m]	TSL Permittivity
Flat, MSL	LAPTOP, 0.00	WLAN 5GHz	WLAN, 10402-AAE	5775.0, 155	3.79	6.13	44.4

Hardware Setup

Phantom	TSL, Measured Date	Probe, Calibration Date	DAE, Calibration Date
ELI V8.0 (20deg probe tilt)	MBBL-600-6000, 2023-Feb-16	EX3DV4 - SN3978, 2022-05-17	DAE4ip Sn1703, 2022-04-28

Scan Setup

	Area Scan	Zoom Scan
Grid Extents [mm]	100.0 x 100.0	22.0 x 22.0 x 22.0
Grid Steps [mm]	10.0 x 10.0	4.0 x 4.0 x 1.4
Sensor Surface [mm]	3.0	1.4
Graded Grid	Yes	Yes
Grading Ratio	1.5	1.4
MAIA	Confirmed by MAIA	Confirmed by MAIA
Surface Detection	VMS + 6p	VMS + 6p
Scan Method	Measured	Measured

Measurement Results

	Area Scan	Zoom Scan
Date	2023-02-16, 14:38	2023-02-16, 14:46
psSAR1g [W/Kg]	0.330	0.342
psSAR10g [W/Kg]	0.124	0.127
Power Drift [dB]	0.07	-0.05
Power Scaling	Disabled	Disabled
Scaling Factor [dB]		
TSL Correction	Positive Only	Positive Only
M2/M1 [%]		63.3
Dist 3dB Peak [mm]		5.8

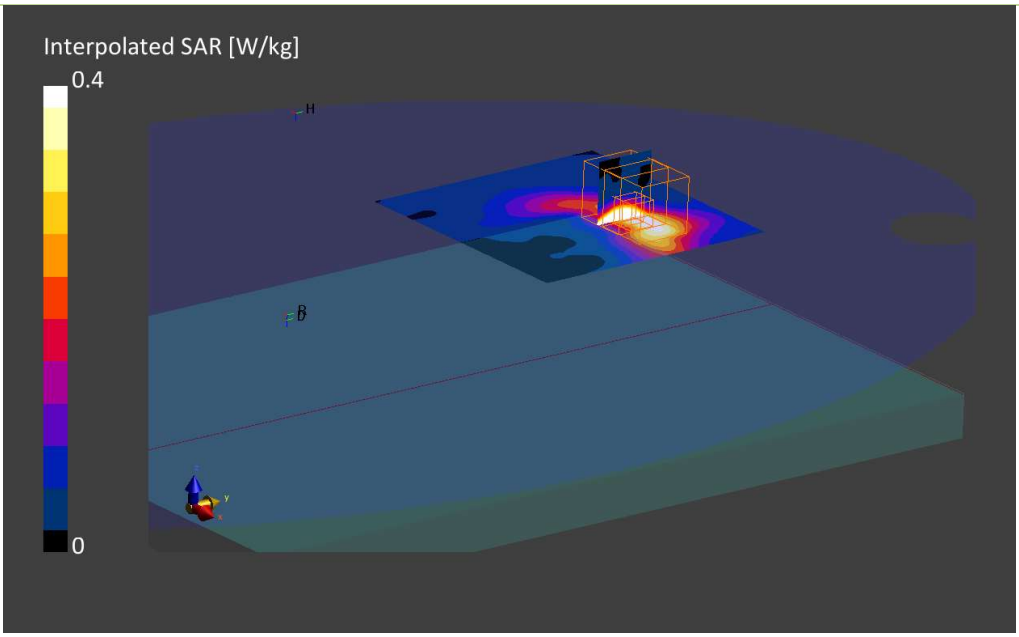

5. System Check Body Liquid 2450MHz

Device under Test Properties

Model, Manufacturer	Dimensions [mm]	S/N	DUT Type
D2450V2, SPEAG	50.0 x 10.0 x 15.0	937	Validation Dipole

Exposure Conditions

Phantom Section, TSL	Position, Test Distance [mm]	Band	Group, UID	Frequency [MHz], Channel Number	Conversion Factor	TSL Conductivity [S/m]	TSL Permittivity
Flat, MSL	,		, 0--	2450.0	7.39	2.06	50.6

Hardware Setup

Phantom	TSL, Measured Date	Probe, Calibration Date	DAE, Calibration Date
ELI V8.0 (20deg probe tilt)	MBBL-600-6000, 2023-Feb-16	EX3DV4 - SN3978, 2022-05-17	DAE4ip Sn1703, 2022-04-28

Scan Setup

	Area Scan	Zoom Scan
Grid Extents [mm]	40.0 x 80.0	30.0 x 30.0 x 30.0
Grid Steps [mm]	10.0 x 10.0	5.0 x 5.0 x 1.5
Sensor Surface [mm]	3.0	1.4
Graded Grid	Yes	Yes
Grading Ratio	1.5	1.5
MAIA	Confirmed by MAIA	Confirmed by MAIA
Surface Detection	VMS + 6p	VMS + 6p
Scan Method	Measured	Measured

Measurement Results

	Area Scan	Zoom Scan
Date	2023-02-16, 11:28	2023-02-16, 11:34
psSAR1g [W/Kg]	2.33	2.44
psSAR10g [W/Kg]	1.11	1.14
Power Drift [dB]	-0.04	-0.06
Power Scaling	Disabled	Disabled
Scaling Factor [dB]		
TSL Correction	Positive Only	Positive Only
M2/M1 [%]		75.7
Dist 3dB Peak [mm]		9.0

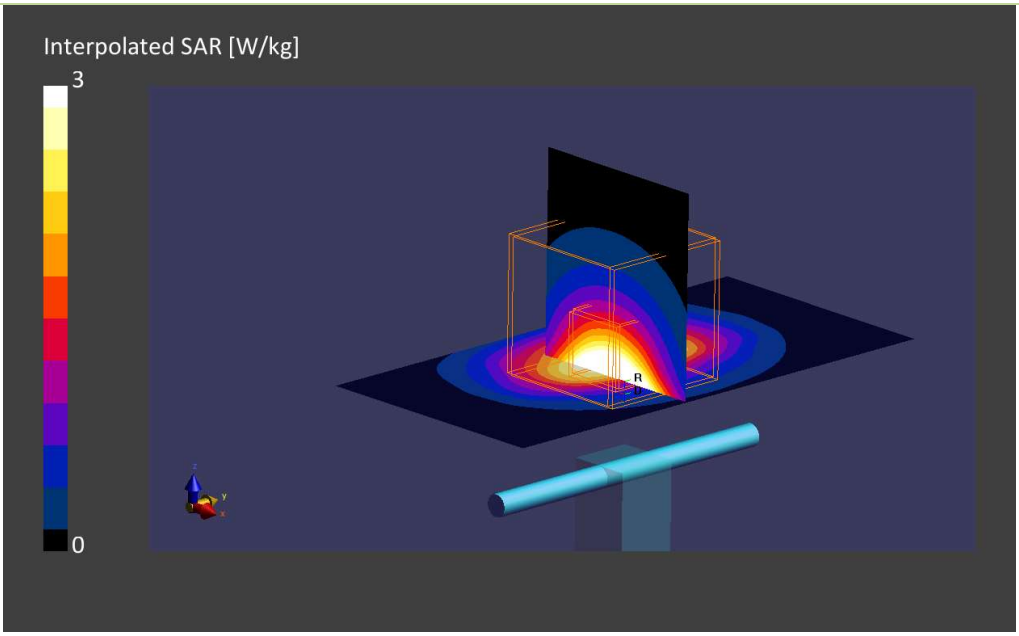

6. System Check Body Liquid 5300MHz

Device under Test Properties

Model, Manufacturer	Dimensions [mm]	S/N	DUT Type
D5GHzV2 , SPEAG	50.0 x 10.0 x 15.0	1259	Validation Dipole

Exposure Conditions

Phantom Section, TSL	Position, Test Distance [mm]	Band	Group, UID	Frequency [MHz], Channel Number	Conversion Factor	TSL Conductivity [S/m]	TSL Permittivity
Flat, MSL	,		, 0--	5300.0, 0	4.1	5.52	48.2

Hardware Setup

Phantom	TSL, Measured Date	Probe, Calibration Date	DAE, Calibration Date
ELI V8.0 (20deg probe tilt)	MBBL-600-6000, 2023-Feb-16	EX3DV4 - SN3978, 2022-05-17	DAE4ip Sn1703, 2022-04-28

Scan Setup

	Area Scan	Zoom Scan
Grid Extents [mm]	40.0 x 80.0	22.0 x 22.0 x 22.0
Grid Steps [mm]	10.0 x 10.0	4.0 x 4.0 x 1.4
Sensor Surface [mm]	3.0	1.4
Graded Grid	Yes	Yes
Grading Ratio	1.5	1.4
MAIA	Confirmed by MAIA	Confirmed by MAIA
Surface Detection	VMS + 6p	VMS + 6p
Scan Method	Measured	Measured

Measurement Results

	Area Scan	Zoom Scan
Date	2023-03-06, 15:06	2023-03-06, 15:12
psSAR1g [W/Kg]	3.09	3.70
psSAR10g [W/Kg]	0.975	1.10
Power Drift [dB]	0.08	-0.12
Power Scaling	Disabled	Disabled
Scaling Factor [dB]		
TSL Correction	Positive Only	Positive Only
M2/M1 [%]		63.8
Dist 3dB Peak [mm]		7.5

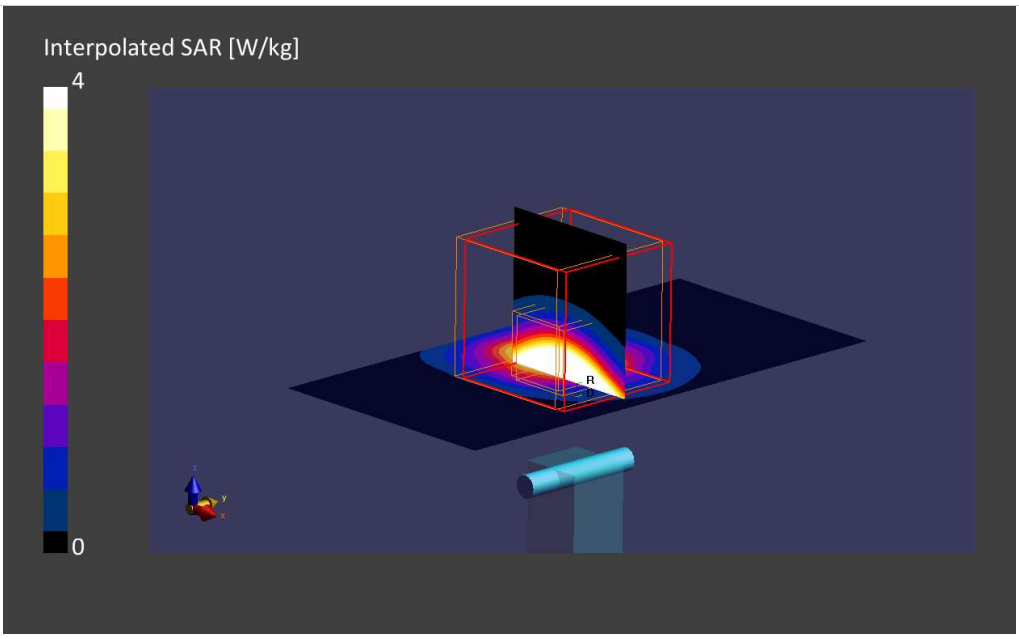

7. System Check Body Liquid 5500MHz

Device under Test Properties

Model, Manufacturer	Dimensions [mm]	S/N	DUT Type
D5GHzV2 , SPEAG	50.0 x 10.0 x 15.0	1259	Validation Dipole

Exposure Conditions

Phantom Section, TSL	Position, Test Distance [mm]	Band	Group, UID	Frequency [MHz], Channel Number	Conversion Factor	TSL Conductivity [S/m]	TSL Permittivity
Flat, MSL	,		, 0--	5500, 0	3.85	5.81	47.9

Hardware Setup

Phantom	TSL, Measured Date	Probe, Calibration Date	DAE, Calibration Date
ELI V8.0 (20deg probe tilt)	MBBL-600-6000, 2023-Mar-06	EX3DV4 - SN3978, 2022-05-17	DAE4ip Sn1703, 2022-04-28

Scan Setup

	Area Scan	Zoom Scan
Grid Extents [mm]	40.0 x 80.0	22.0 x 22.0 x 22.0
Grid Steps [mm]	10.0 x 10.0	4.0 x 4.0 x 1.4
Sensor Surface [mm]	3.0	1.4
Graded Grid	Yes	Yes
Grading Ratio	1.5	1.4
MAIA	Confirmed by MAIA	Confirmed by MAIA
Surface Detection	VMS + 6p	VMS + 6p
Scan Method	Measured	Measured

Measurement Results

	Area Scan	Zoom Scan
Date	2023-03-06, 11:41	2023-03-06, 11:48
psSAR1g [W/Kg]	3.24	3.66
psSAR10g [W/Kg]	1.05	1.13
Power Drift [dB]	-0.01	0.00
Power Scaling	Disabled	Disabled
Scaling Factor [dB]		
TSL Correction	Positive Only	Positive Only
M2/M1 [%]		63.6
Dist 3dB Peak [mm]		7.9

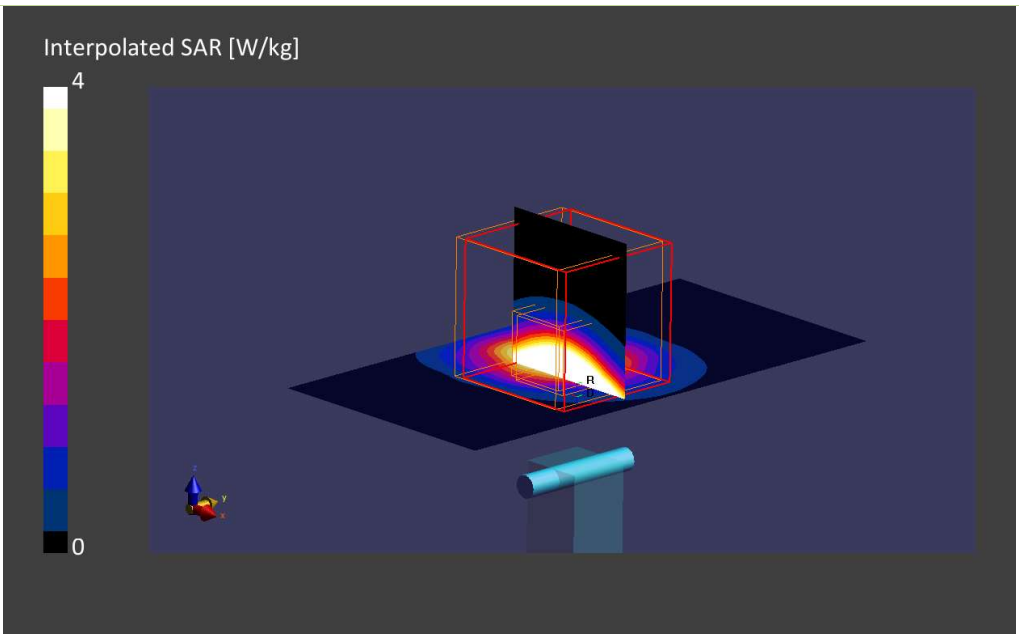

8. System Check Body Liquid 5600MHz

Device under Test Properties

Model, Manufacturer	Dimensions [mm]	S/N	DUT Type
D5GHzV2 , SPEAG	50.0 x 10.0 x 12.0	1259	Validation Dipole

Exposure Conditions

Phantom Section, TSL	Position, Test Distance [mm]	Band	Group, UID	Frequency [MHz], Channel Number	Conversion Factor	TSL Conductivity [S/m]	TSL Permittivity
Flat, MSL	,		, 0--	5600	3.77	5.91	44.8

Hardware Setup

Phantom	TSL, Measured Date	Probe, Calibration Date	DAE, Calibration Date
ELI V8.0 (20deg probe tilt)	MBBL-600-6000, 2023-Feb-16	EX3DV4 - SN3978, 2022-05-17	DAE4ip Sn1703, 2022-04-28

Scan Setup

	Area Scan	Zoom Scan
Grid Extents [mm]	40.0 x 80.0	22.0 x 22.0 x 22.0
Grid Steps [mm]	10.0 x 10.0	4.0 x 4.0 x 1.4
Sensor Surface [mm]	3.0	1.4
Graded Grid	Yes	Yes
Grading Ratio	1.5	1.4
MAIA	Confirmed by MAIA	Confirmed by MAIA
Surface Detection	VMS + 6p	VMS + 6p
Scan Method	Measured	Measured

Measurement Results

	Area Scan	Zoom Scan
Date	2023-02-16, 09:38	2023-02-16, 09:45
psSAR1g [W/Kg]	3.41	3.88
psSAR10g [W/Kg]	1.07	1.18
Power Drift [dB]	0.13	-0.10
Power Scaling	Disabled	Disabled
Scaling Factor [dB]		
TSL Correction	Positive Only	Positive Only
M2/M1 [%]		60.5
Dist 3dB Peak [mm]		7.9

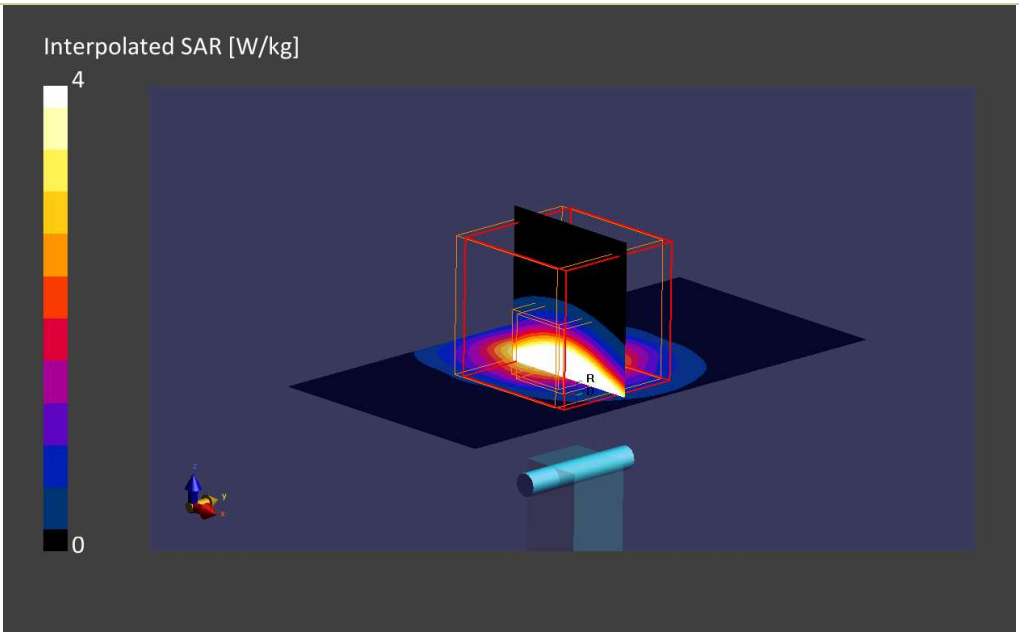

9. System Check Body Liquid 5800MHz

Device under Test Properties

Model, Manufacturer	Dimensions [mm]	S/N	DUT Type
D5GHzV2 , SPEAG	50.0 x 10.0 x 12.0	1259	Validation Dipole

Exposure Conditions

Phantom Section, TSL	Position, Test Distance [mm]	Band	Group, UID	Frequency [MHz], Channel Number	Conversion Factor	TSL Conductivity [S/m]	TSL Permittivity
Flat, MSL	,		, 0--	5800	3.79	6.16	44.3

Hardware Setup

Phantom	TSL, Measured Date	Probe, Calibration Date	DAE, Calibration Date
ELI V8.0 (20deg probe tilt)	MBBL-600-6000, 2023-Feb-16	EX3DV4 - SN3978, 2022-05-17	DAE4ip Sn1703, 2022-04-28

Scan Setup

	Area Scan	Zoom Scan
Grid Extents [mm]	40.0 x 80.0	22.0 x 22.0 x 22.0
Grid Steps [mm]	10.0 x 10.0	4.0 x 4.0 x 1.4
Sensor Surface [mm]	3.0	1.4
Graded Grid	Yes	Yes
Grading Ratio	1.5	1.4
MAIA	Confirmed by MAIA	Confirmed by MAIA
Surface Detection	VMS + 6p	VMS + 6p
Scan Method	Measured	Measured

Measurement Results

	Area Scan	Zoom Scan
Date	2023-02-16, 09:48	2023-02-16, 09:55
psSAR1g [W/Kg]	3.12	3.53
psSAR10g [W/Kg]	0.978	1.07
Power Drift [dB]	-0.10	-0.05
Power Scaling	Disabled	Disabled
Scaling Factor [dB]		
TSL Correction	Positive Only	Positive Only
M2/M1 [%]		59.5
Dist 3dB Peak [mm]		7.9

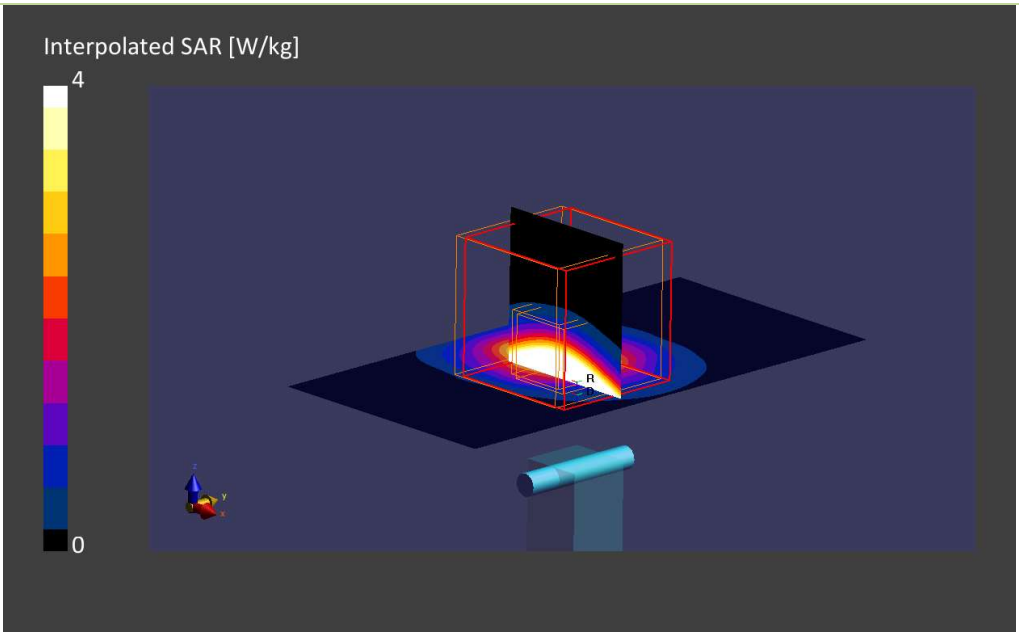

Annex D. TSL Dielectric Parameters

D.1 Body DTS 2300 – 2500 MHz

Freq.(MHz)	Target		Measured 2023-02-16	
	ε'(F/m)	σ(S/m)	ε'1(F/m)	σ1(S/m)
2300	52.9	1.81	50.78	1.92
2350	52.83	1.85	50.71	1.97
2400	52.77	1.9	50.64	2.01
2450	52.7	1.95	50.56	2.06
2500	52.64	2.02	50.47	2.1

Permittivity	Conductivity
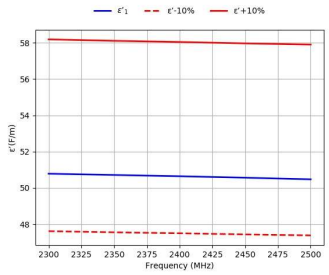	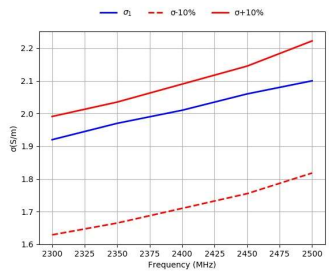

D.2 Body 5200 – 5900 MHz

Freq.(MHz)	Target		Measured 2023-02-16		Measured 2023-03-06	
	ε'(F/m)	σ(S/m)	ε'1(F/m)	σ1(S/m)	ε'2(F/m)	Σ2(S/m)
5200	49.01	5.3	45.53	5.32	48.4	5.35
5250	48.95	5.36	45.43	5.4	48.31	5.43
5300	48.88	5.42	45.35	5.48	48.23	5.52
5350	48.81	5.47	45.25	5.56	48.14	5.6
5400	48.74	5.53	45.16	5.64	48.07	5.68
5450	48.67	5.59	45.08	5.71	47.99	5.74
5500	48.61	5.65	45.0	5.77	47.91	5.81
5550	48.54	5.71	44.91	5.84	47.83	5.88
5600	48.47	5.77	44.8	5.91	47.73	5.94
5650	48.4	5.82	44.68	5.97	47.61	6.02
5700	48.34	5.88	44.56	6.04	47.5	6.1
5750	48.27	5.94	44.45	6.1	47.39	6.18
5800	48.2	6.0	44.33	6.16	47.28	6.25
5850	48.13	6.06	44.2	6.22	47.16	6.32
5900	48.06	6.12	44.07	6.28	47.03	6.39
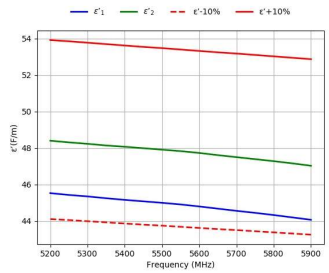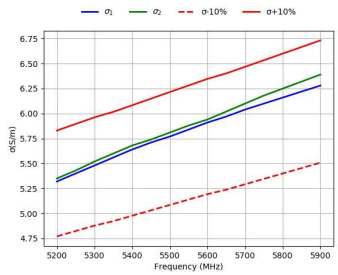
Permittivity	Conductivity