3. Setup photo

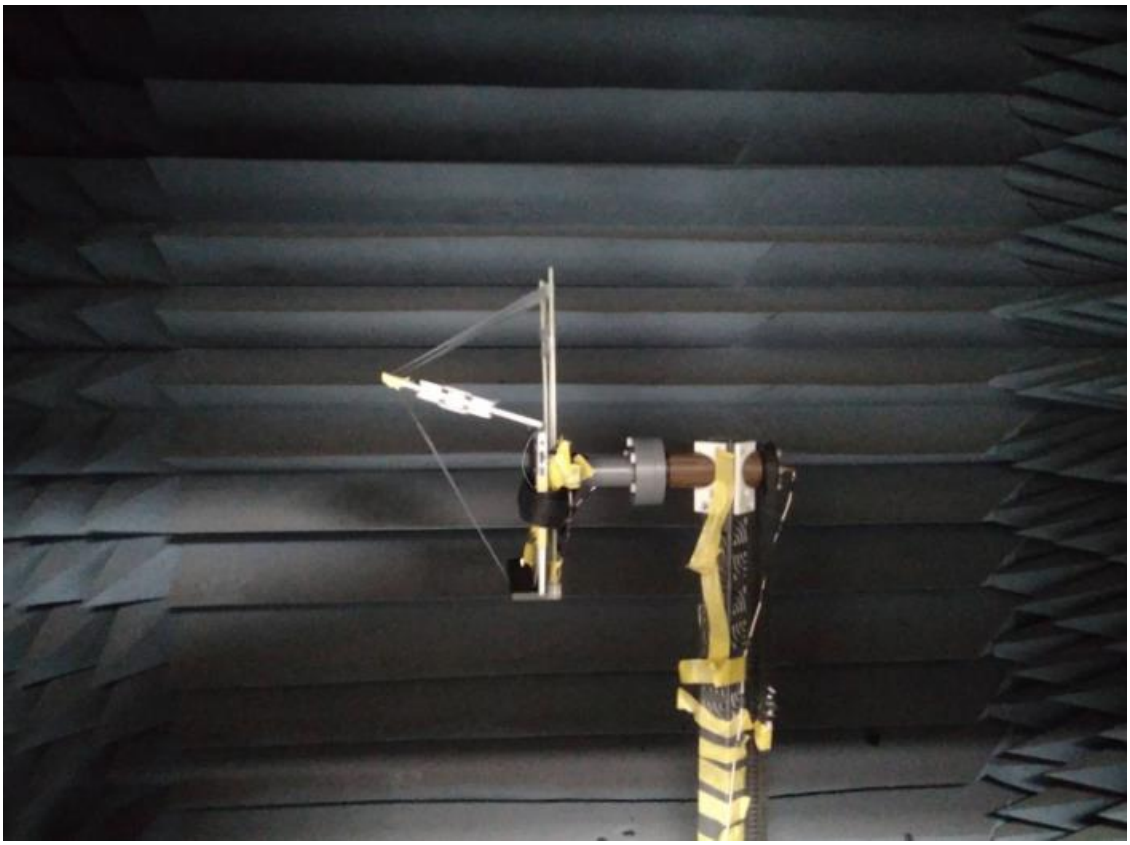

Section 2. Dimensioned Photos and Drawings of Antennas

Main Antenna Drawing:

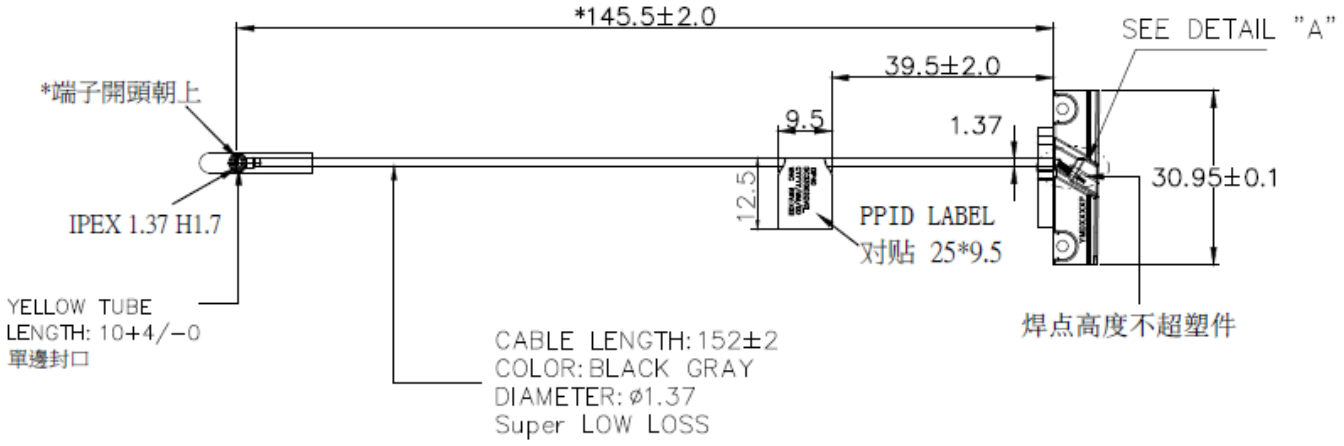

Main Antenna Photo (Front/Back):

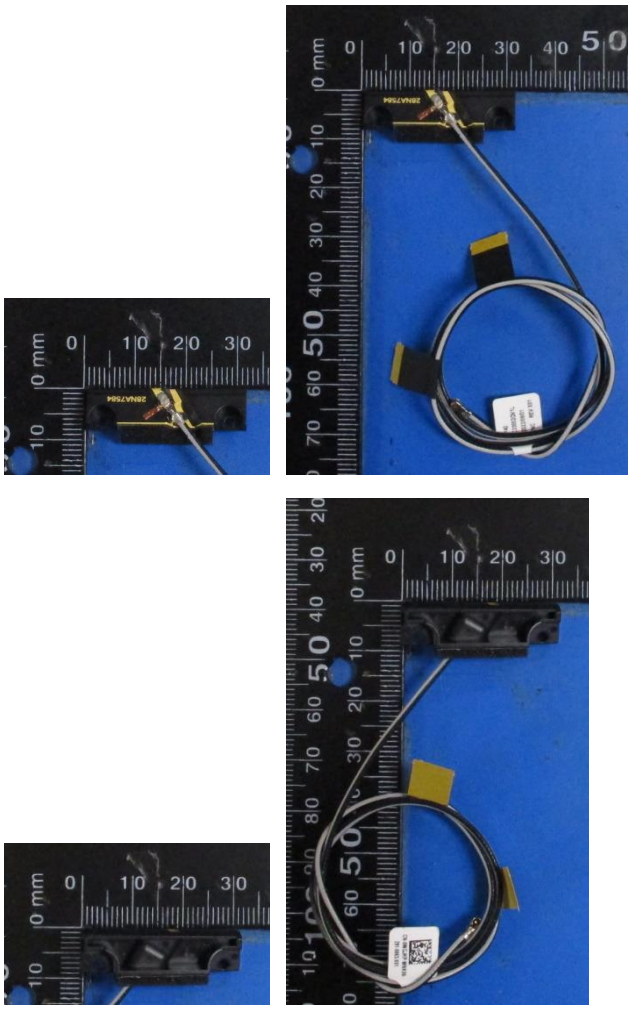

Note: antenna photo should include L type ruler

Aux Antenna Drawing:

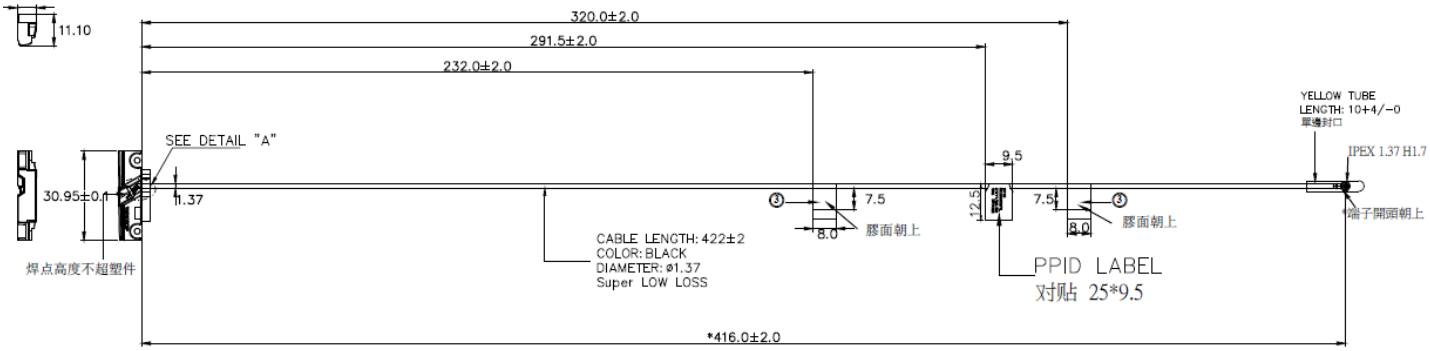

Aux Antenna Photo (Front/Back):

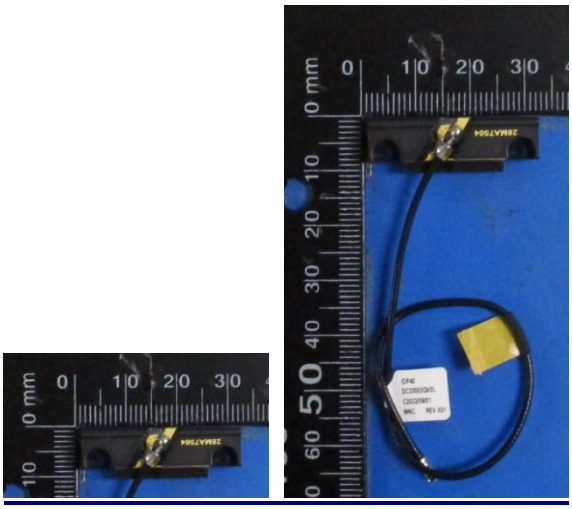

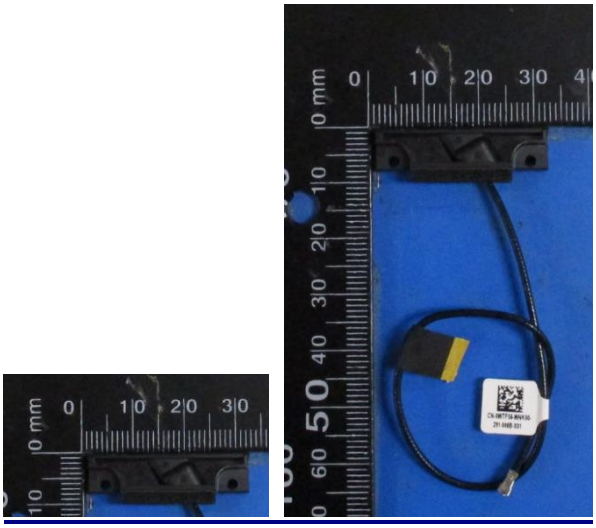

Note: antenna photo should include L type ruler

Section 4. Antenna Host Platform Location Information

Include a **dimensioned photo(s) or dimensioned drawing(s)** of Main and Aux antenna placements (measurements are not required for receive-only antenna).

Any antenna that transmits must show dimensions to bottom of laptop. Provide a description of the materials that are used for supporting or surrounding transmit antennas; for example, non-conductive plastics vs. conductive coated plastic or metallic materials.

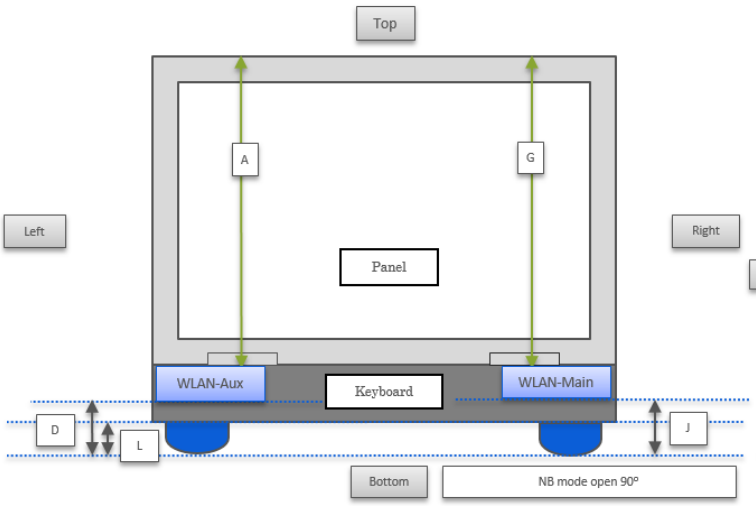

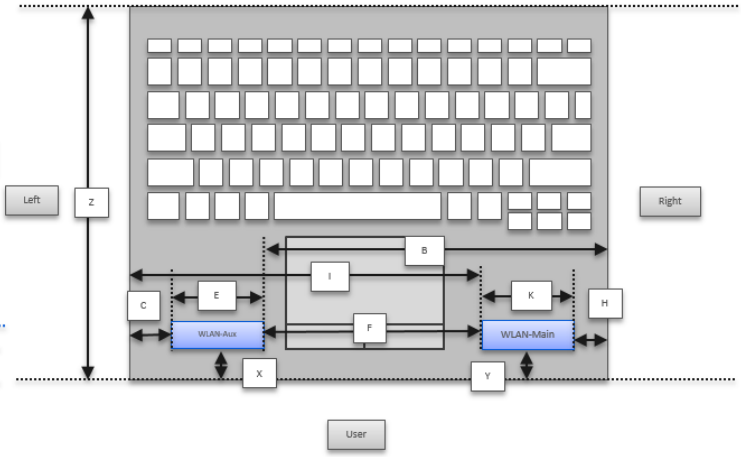

Minimum Separation Distance			
Item	Antenna	Position	Distance (mm)
A	WLAN-Aux	to Top	227.58
B	WLAN-Aux	to Right	307.26
C	WLAN-Aux	to Left	1.71
D	WLAN-Aux	to Bottom	5.26
E	WLAN-Aux	Main Antenna Length	7.75
F	Main-Aux	Main to Aux	297.8
G	WLAN-Main	to Top	227.58
H	WLAN-Main	to Right	1.71
I	WLAN-Main	to Left	307.26
J	WLAN-Main	to Bottom	5.26
K	WLAN-Main	Aux Antenna Length	7.75
L	NB	Bumper thickness	3.46
X	WLAN-Main	to User	15.02
Y	WLAN-Aux	to User	15.02
Z	NB	Keyboard depth	260.47

Section 5. Antenna dimensional information for SAR evaluation
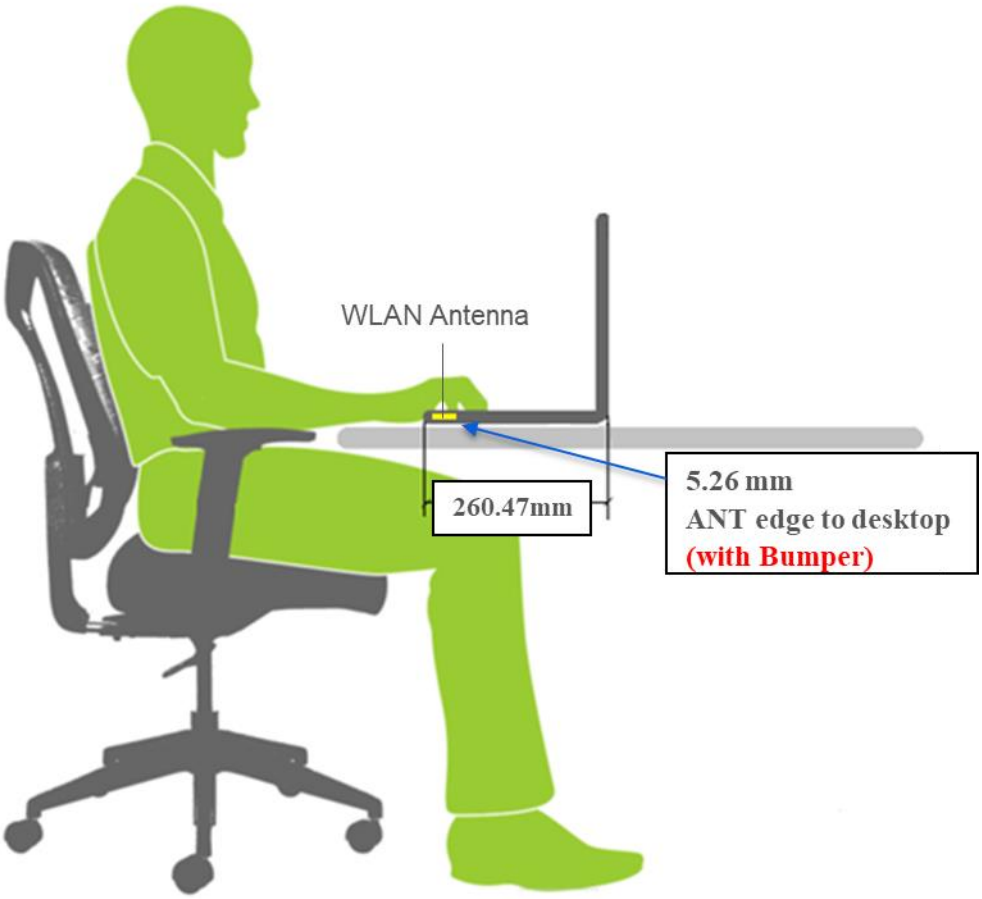
Include a **dimensioned photo(s) or dimensioned drawing(s)** showing the distance (mm) between the transmit antennas and the user. For notebook/laptop hosts show lapheld position (example below). For tablet hosts show all orientations including lapheld, primary & secondary portrait, primary & secondary landscape positions. Include a description of any proximity sensors or power throttling implementations that limit or exclude use of any host orientation.