NEMKO Test Report:	**1L0357RUS1**
Applicant:	**Intel Corporation** 15250 Ave. of Science SN1-02 San Diego, CA 92128
Equipment Under Test:	**WUD2011bWW Wireless LAN**
In Accordance With:	**FCC Part 15, Subpart C, 15.247** Direct Sequence Spread Spectrum Transmitters
Tested By:	Nemko Dallas Inc. 802 N. Kealy Lewisville, Texas 75057-3136
Authorized By:	Tom Tidwell, RF Group Manager
Date:	8/28/01
Total Number of Pages:	42

Table of Contents

Section 1. Summary of Test Results 3

Section 2. Equipment Under Test (E.U.T.) 5

Section 3. Powerline Conducted Emissions 7

Section 4. Minimum 6 dB Bandwidth 10

Section 5. Maximum Peak Output Power 14

Section 6. RF Exposure 15

Section 7. Spurious Emissions (conducted) 16

Section 8. Spurious Emissions (radiated) 20

Section 9. Peak Power Spectral Density 23

Section 11. Test Equipment List 28

ANNEX A - TEST DETAILS 29

ANNEX B - TEST DIAGRAMS 39

Section 1. Summary of Test Results

Manufacturer: Intel Corporation

Model No.: WUD2011bWW

Serial No.: None

General: **All measurements are traceable to national standards.**

These tests were conducted on a sample of the equipment for the purpose of demonstrating compliance with Part 15, Subpart C, Paragraph 15.247 for Direct Sequence Spread Spectrum devices. Radiated tests were conducted is accordance with ANSI C63.4-1992. Radiated emissions are made on an open area test site. A description of the test facility is on file with the FCC.

☒	New Submission	☐	Production Unit
☐	Class II Permissive Change	☒	Pre-Production Unit
☐	Modular Approval		

THIS TEST REPORT RELATES ONLY TO THE ITEM(S) TESTED.

THE FOLLOWING DEVIATIONS FROM, ADDITIONS TO, OR EXCLUSIONS FROM THE TEST SPECIFICATIONS HAVE BEEN MADE.
See " Summary of Test Data".

NVLAP LAB CODE: 100426-0

NEMKO Dallas Inc. authorizes the above named company to reproduce this report provided it is reproduced in its entirety and for use by the company's employees only.

Any use which a third party makes of this report, or any reliance on or decisions to be made based on it, are the responsibility of such third parties. NEMKO Dallas Inc. accepts no responsibility for damages, if any, suffered by any third party as a result of decisions made or actions based on this report. This report applies only to the items tested.

Summary Of Test Data

Power Line Conducted Emissions	15.207(a)	48 dBµV	Complies
Minimum 6 dB Bandwidth	15.247(a)(2)	500 kHz	Complies
Maximum Peak Power Output	15.247(b)(1)	1 Watt	Complies
Spurious Emissions (Antenna Conducted)	15.247(c)	-20 dBc/100kHz	Complies
Spurious Emissions (Restricted Bands)	15.247(c)	Table 15.209(a)	Complies
Peak Power Spectral Density	15.247(d)	+8 dBm/3kHz	Complies
Processing Gain	15.247(e)	12.9 dB	Complies

Footnotes:

Section 2. Equipment Under Test (E.U.T.)

General Equipment Information

Frequency Band:
- ☐ 902 – 928 MHz
- ☒ 2400 – 2483.5 MHz
- ☐ 5725 – 5850 MHz

Tuning Range: 2412 - 2462 MHz (Channels 1 – 11)

User Frequency Adjustment: Software controlled. Not adjustable by user.

Description of Operation

The EUT is a wireless LAN transmitter module that is designed in compliance with 802.11b standards. The module operates as a direct sequence spread spectrum transmitter in the frequency range 2412 - 2462 MHz. The hardware is capable of tuning between 2412 - 2484 MHz but in North America, the frequency range is limited through firmware to channels 1 -11 (2412 - 2462 MHz). The device connects via an integral USB cable to any PC with USB capability.

System Diagram

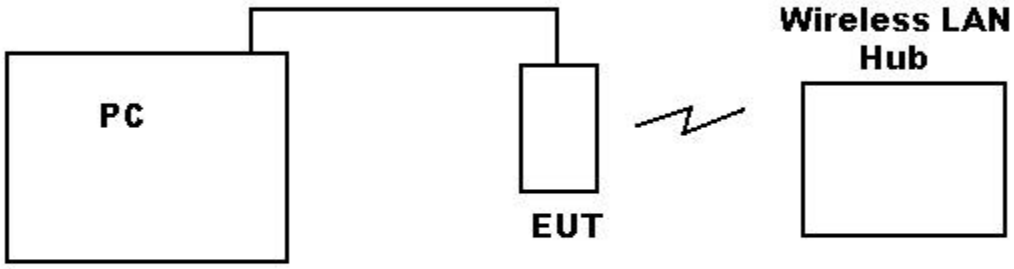

Section 3. Powerline Conducted Emissions

NAME OF TEST: Powerline Conducted Emissions	PARA. NO.: 15.207(a)
TESTED BY: Ed McGrath	DATE: 8/22/2001

Test Results: Complies.

Measurement Data: See attached plots.

Measurement Uncertainty: +/- 1.7 dB

Test Data—Powerline Conducted Emissions

NEMKO Dallas, Inc.

Dallas Headquarters:
802 N. Kealy
Lewisville, TX 75057
Tel: (972) 436-9600
Fax: (972) 436-2667

Conducted Emissions

Powerline Voltage Measurement

Complete: X
Preliminary:

Job # : 1L0357E Test # : CEPV-03
Page 1 of 1

Client Name : Intel
EUT Name : 802.11b Wireless LAN
EUT Config. : Typical
Transmit Mode
Specification : Part 15.207 Reference : CLASS B

Transducer # :	1528	Temp. (deg. C) :	22	Date :	8/22/01
HP Filter # :	704	Humidity (%) :	49	Time :	5:00 P.M.
Cable 1 # :	1976	EUT Voltage :	115Vac	Staff :	Ed McGrath
Cable 2 # :	1534	EUT Frequency :	60Hz	Location :	LAB 3
Detector 1 # :	1502	Peak Bandwidth:	10KHz	Photo ID:	1L0357E CEPV-03
Detector 2 # :	None	QP Bandwidth	9KHz		
Limiter # :	1523	Avg. Bandwidth	9KHz		

Meas. Freq. (MHz)	EUT Test Point	Detector Type (P,QP, A)	Limit Type (QP, A)	Meter Reading (dBuV)	Path Loss (dB)	Transducer Factor (dB)	Corrected Reading (dBuV)	Spec.limit (dBuV) Q.P.	Spec.limit (dBuV) Avg.	CR/SL Diff. (dB)	Pass Fail Unc.	Comment
0.45	H	P	QP	42.5	0.0	0.0	42.5	48	NA	-5.5	Pass	
0.588	H	P	QP	42.3	0.0	0.0	42.3	48	NA	-5.7	Pass	
2.7	H	P	QP	31.0	0.0	0.0	31.0	48	NA	-17.0	Pass	
15	H	P	QP	27.0	0.0	0.0	27.0	48	NA	-21.0	Pass	
29.9	H	P	QP	26.0	0.0	0.0	26.0	48	NA	-22.0	Pass	
0.45	N	P	QP	41.0	0.0	0.0	41.0	48	NA	-7.0	Pass	
0.586	N	P	QP	42.6	0.0	0.0	42.6	48	NA	-5.4	Pass	
2.7	N	P	QP	29.0	0.0	0.0	29.0	48	NA	-19.0	Pass	
15	N	P	QP	27.3	0.0	0.0	27.3	48	NA	-20.7	Pass	
29.9	N	P	QP	29.9	0.0	0.0	29.9	48	NA	-18.1	Pass	
												Scanned
												0.450MHZ to
												30MHz
Document Control #EMC DS EM COND VOLT												

Test Setup Photographs—Powerline Conducted Emissions

Front

Side

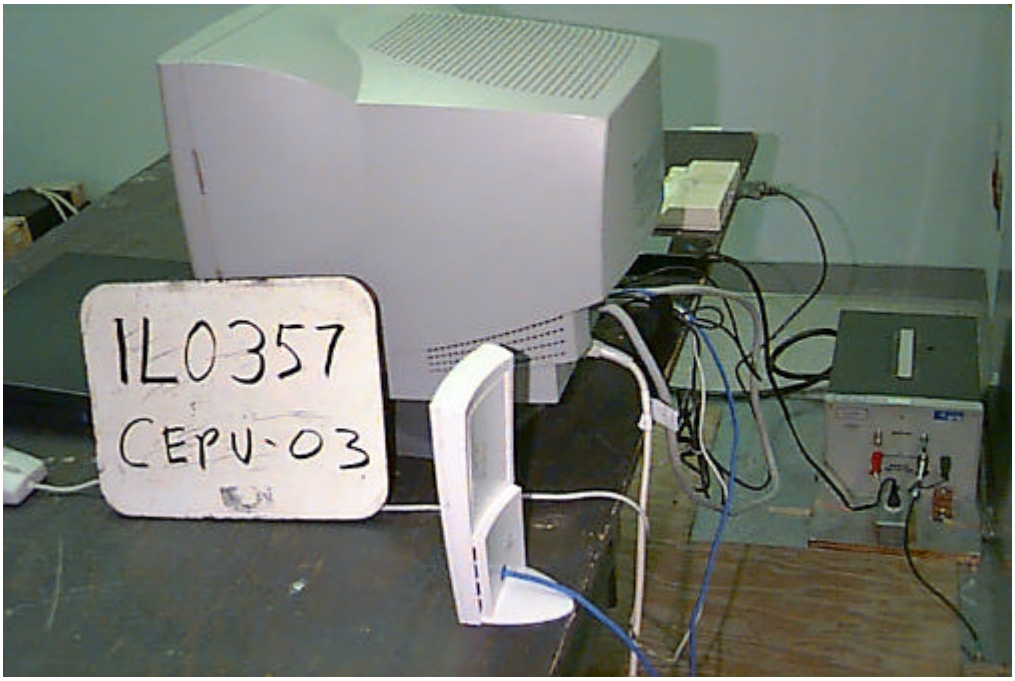

Section 4. Minimum 6 dB Bandwidth

NAME OF TEST: Minimum 6 dB Bandwidth	PARA. NO.: 15.247(a)(2)
TESTED BY: Chinda Poy	DATE: 6/11/01

Test Results: Complies.

Measurement Data: See 6 dB BW plot
Measured 6 dB bandwidth: 9.93 MHz Minimum
Channel Separation: 5 MHz

Equipment Used: 1464-1465-1045

Measurement Uncertainty: +/- 1.6 dB
+/- $1x10^{-7}$ ppm

Test Data – 6 dB Bandwidth

Nemko Dallas, Inc.

Dallas Headquarters:
802 N. Kealy
Lewisville, TX 75057
Tel: (972) 436-9600
Fax: (972) 436-2667

Data Plot **6 dB Bandwidth**

Page 1 of 3 Complete X
Job No.: 1L0357R Date: 6/11/01 Preliminary
Specification: 15.247 Temperature(°C): 24
Tested By: Chinda Poy Relative Humidity(%) 38
E.U.T.: Wireless LAN
Configuration: TX
Sample Number: S01
Location: Lab 2 RBW: Refer to plots
Detector Type: Peak VBW: Refer to plots

Test Equipment Used

Antenna: Directional Coupler:
Pre-Amp: Cable #1: 1045
Filter: Cable #2:
Receiver: 1464 Cable #3:
Attenuator #1 1465 Cable #4:
Attenuator #2: Mixer:
Additional equipment used:
Measurement Uncertainty: +/-1.6 dB, 1E-7 ppm

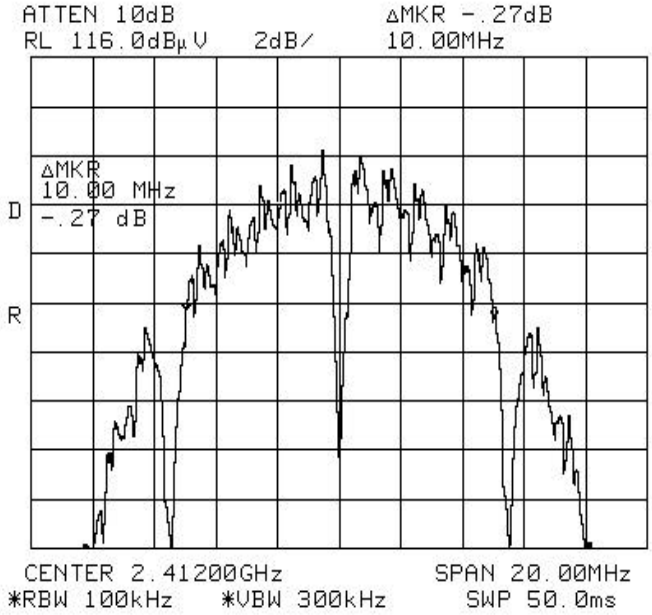

Notes: **Transmit Low Channel**

Test Data – 6 dB Bandwidth

Nemko

Dallas Headquarters:
802 N. Kealy
Lewisville, TX 75057
Tel: (972) 436-9600
Fax: (972) 436-2667

Nemko Dallas, Inc.

Data Plot 6 dB Bandwidth

Page 2 of 3

Job No.:	1L0357R	Date:	6/11/01
Specification:	15.2	Temperature(°C):	24
Tested By:	Chinda Poy	Relative Humidity(%)	38
E.U.T.:	Wireless LAN		
Configuration:	TX		

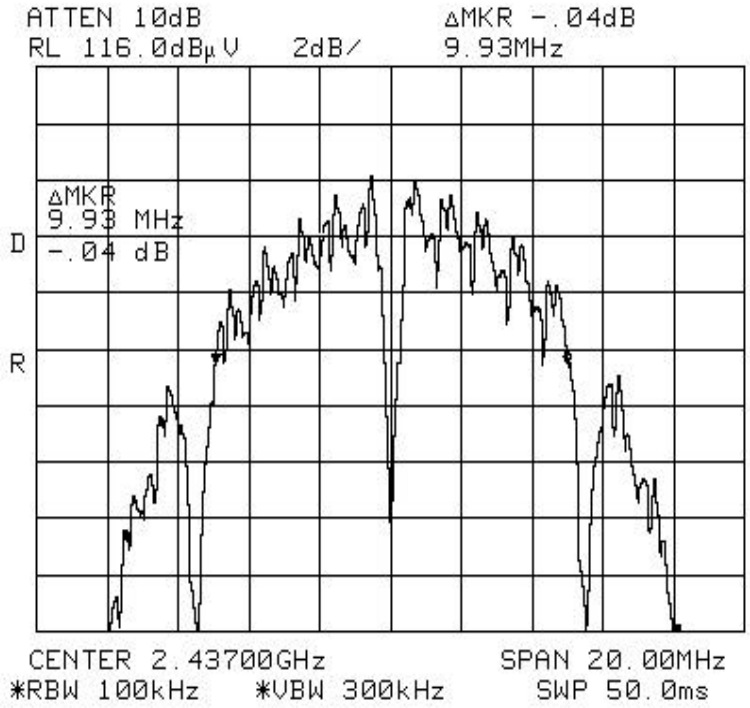

Notes: **Transmit Mid Channel**

Test Data – 6 dB Bandwidth

Dallas Headquarters:
802 N. Kealy
Lewisville, TX 75057
Tel: (972) 436-9600
Fax: (972) 436-2667

Nemko Dallas, Inc.

Data Plot 6 dB Bandwidth

Page 3 of 3

Job No.:	1L0357R	Date:	6/11/01
Specification:	15.247	Temperature(°C):	24
Tested By:	Chinda Poy	Relative Humidity(%)	38
E.U.T.:	Wireless LAN		
Configuration:	TX		

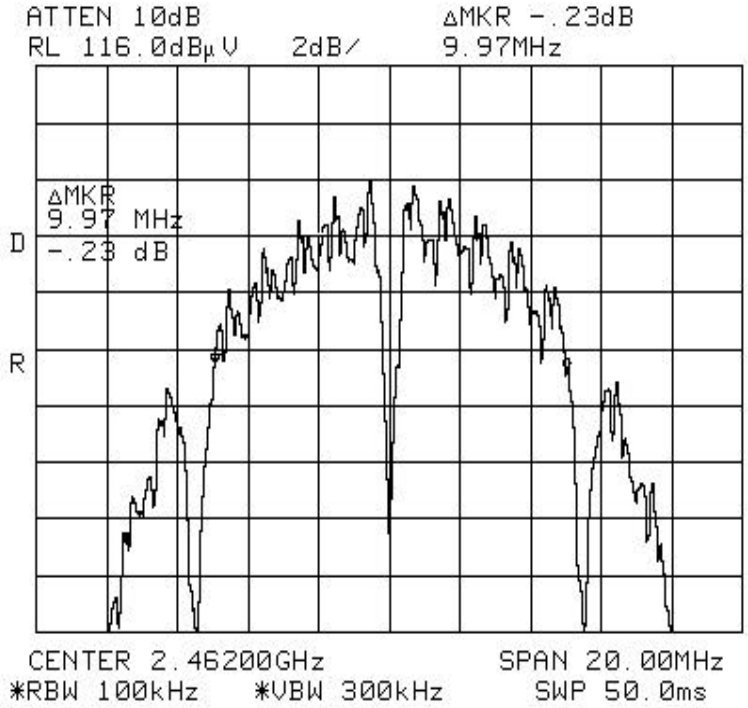

Notes: **Transmit High Channel**

Section 5. Maximum Peak Output Power

NAME OF TEST: Maximum Peak Output power	PARA. NO.: 15.247(b)(1)
TESTED BY: Chinda Poy	DATE: 6/11/01

Test Results: Complies.

Measurement Data:

Antennas: **Integral**

Frequency (GHz)	**RF Power Output** (dBm)	**Antenna Gain (dBi)**	**E.I.R.P. (dBm)**
2.412	17.0	5	22.0
2.437	16.5	5	21.5
2.462	16.2	5	21.2

Equipment Used: 1029-1030-1469

Measurement Uncertainty: +/- 0.7 dB

Section 6. RF Exposure

NAME OF TEST: RF Exposure	PARA. NO.: 15.247(b)(4)

Measurement Data:

This device is to be operated at a minimum separation distance of 20 cm. and is to be classified as a mobile device. MPE prediction calculation follows.

MPE Prediction

Nemko

Prediction of MPE limit at a given distance

Equation from page 18 of OET Bulletin 65, Edition 97-01

$$S = \frac{PG}{4pR^2}$$

where: S = power density
P = power input to the antenna
G = power gain of the antenna in the direction of interest relative to an isotropic radiator
R = distance to the center of radiation of the antenna

Maximum peak output power at antenna input terminal:	17.00	(dBm)
Maximum peak output power at antenna input terminal:	50.11872	(mW)
Antenna gain(typical):	5	(dBi)
Maximum antenna gain:	3.162278	(numeric)
Prediction distance:	5	(cm)
Prediction frequency:	2400	(MHz)
MPE limit for uncontrolled exposure at prediction frequency:	1	(mW/cm^2)
Power density at prediction frequency:	0.504487	(mW/cm^2)
Maximum allowable antenna gain:	7.971499	(dBi)

Section 7. Spurious Emissions (conducted)

NAME OF TEST: Spurious Emissions (conducted)	PARA. NO.: 15.247(c)
TESTED BY: Chinda Poy	DATE: 6/11/01

Test Results: Complies.

Measurement Data: See attached plots.

NOTE: The upper band edge emission is subject to the radiated emission requirements of 15.209, therefore the measurement data is included in that section of the test report.

Equipment Used: 1464-1465-1045

Measurement Uncertainty: +/- 1.6 dB

Test Data – Spurious Emissions Conducted

Nemko

Nemko Dallas, Inc.

Dallas Headquarters:
802 N. Kealy
Lewisville, TX 75057
Tel: (972) 436-9600
Fax: (972) 436-2667

Data Plot **Antenna Port Spurious Emissions**

Page 1 of 3

Complete X
Preliminary

Job No.: 1L0357R Date: 6/11/01
Specification: 15.247 Temperature(°C): 24
Tested By: Chinda Poy Relative Humidity(%) 38
E.U.T.: Wireless LAN
Configuration: TX
Sample Number: S01
Location: Lab 2 RBW: Refer to plots
Detector Type: Peak VBW: Refer to plots

Test Equipment Used

Antenna: Directional Coupler:
Pre-Amp: Cable #1: 1045
Filter: Cable #2:
Receiver: 1464 Cable #3:
Attenuator #1 1465 Cable #4:
Attenuator #2: Mixer:
Additional equipment used:
Measurement Uncertainty: +/-1.6 dB

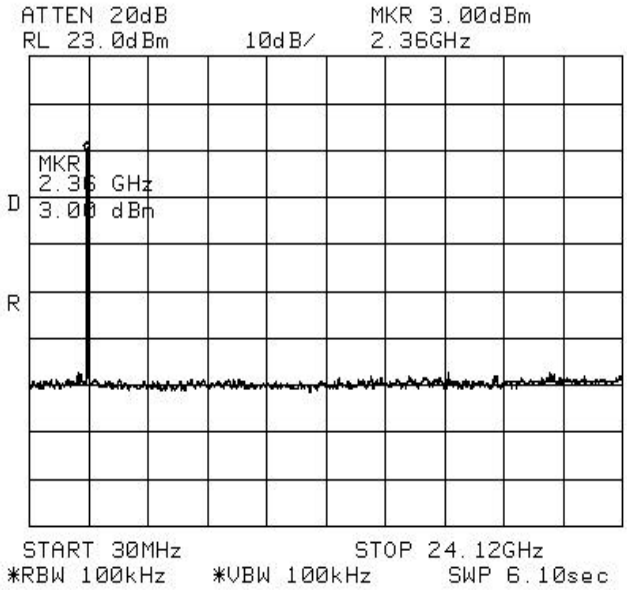

Notes: **Transmit Low Channel**
Channel = 1

Test Data – Spurious Emissions Conducted

Dallas Headquarters:
802 N. Kealy
Lewisville, TX 75057
Tel: (972) 436-9600
Fax: (972) 436-2667

Nemko Dallas, Inc.

Data Plot **Antenna Port Spurious Emissions**

Page 2 of 3

Job No.:	1L0357R	Date:	6/11/01
Specification:	15.2	Temperature(°C):	24
Tested By:	Chinda Poy	Relative Humidity(%)	38
E.U.T.:	Wireless LAN		
Configuration:	TX		

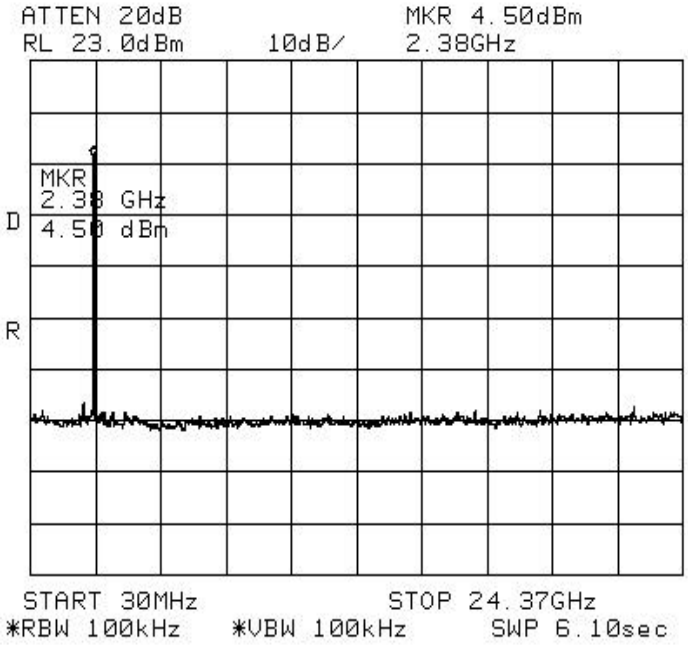

Notes: **Transmit Mid Channel**
Channel = 6

Test Data – Spurious Emissions Conducted

Dallas Headquarters:
802 N. Kealy
Lewisville, TX 75057
Tel: (972) 436-9600
Fax: (972) 436-2667

Nemko Dallas, Inc.

Data Plot **Antenna Port Spurious Emissions**

Page 3 of 3

Job No.:	1L0357R	Date:	6/11/01
Specification:	15.247	Temperature(°C):	24
Tested By:	Chinda Poy	Relative Humidity(%)	38
E.U.T.:	Wireless LAN		
Configuration:	TX		

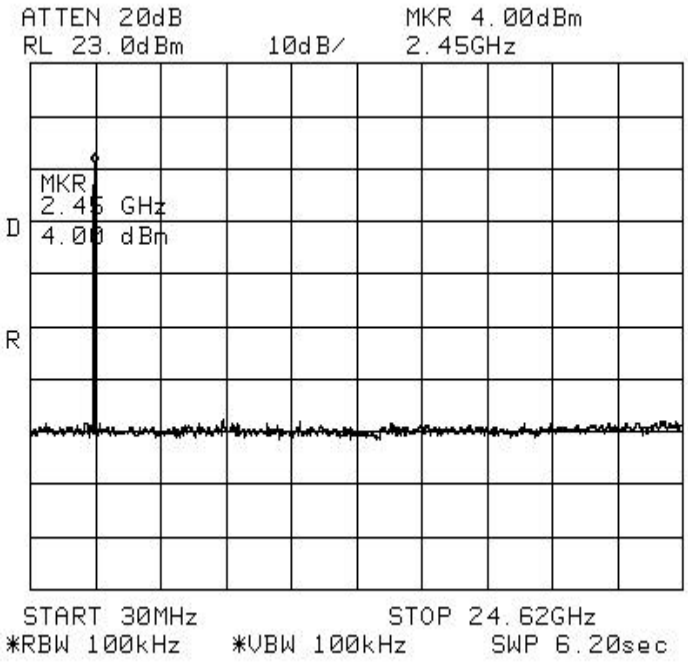

Notes: **Transmit High Channel**
Channel = 11

Section 8. Spurious Emissions (radiated)

NAME OF TEST: Spurious Emissions	PARA. NO.: 15.247 (c)
TESTED BY: Lance Walker	DATE: 8/22/2001

Test Results: Complies.

Measurement Data: See attached table.

Note: The supply voltage was varied +/- 15 % from nominal for this testing. No change in the emission levels was noted.

Measurement Uncertainty: +/- 1.8 dB

Test Data – Spurious Emissions

Nemko Dallas, Inc.

Dallas Headquarters:
802 N. Kealy
Lewisville, TX 75057
Tel: (972) 436-9600
Fax: (972) 436-2667

Radiated Emissions

Page 1 of 1

Job No.: 1L0357R Date: 8/22/01
Specification: FCC Part 15.247 Temperature(°C): 22
Tested By: Lance Walker Relative Humidity(%) 50
E.U.T.: WIRELESS LAN
Configuration: TX @ CH 1, 6, AND 11 TO VIEW RESTRICTED BAND EMISSIONS
Sample Number: SO1
Location: AC 3 RBW: 1 MHz
Detector Type: Peak VBW: 100 kHz

Test Equipment Used

Antenna: 993 Directional Coupler: #N/A
Pre-Amp: 791 Cable #1: 1485
Filter: 1482 Cable #2: 1484
Receiver: 1464 Cable #3: #N/A
Attenuator #1 #N/A Cable #4: #N/A
Attenuator #2: #N/A Mixer: #N/A
Measurement Uncertainty: +/- 3.6 dB

Frequency (GHz)	Meter Reading (dBuV)	Antenna Factor (dB)	Cable Loss (dB)	Pre-Amp Gain (dB)	Corrected Reading (dBuV/m)	Limit (dBuV/m)	Delta (dB)	Comment
								Channel 1
4.824	33.7	33.2	4.2	30.1	41.0	54	-13.0	Noise floor V
12.060	34.3	39.7	7.3	33.4	47.9	54	-6.1	Noise floor
14.472	34.2	41.1	7.2	30.6	51.9	54	-2.1	Noise floor
4.824	33.7	33.2	4.2	30.1	41.0	54	-13.0	Noise floor H
12.060	34.3	39.7	7.3	33.4	47.9	54	-6.1	Noise floor
14.472	33.7	41.1	7.2	30.6	51.4	54	-2.6	Noise floor
								Channel 6
4.874	33.3	33.4	4.3	29.9	41.1	54	-12.9	Noise floor H
7.311	33.5	35.8	5.2	34.2	40.3	54	-13.7	Noise floor
12.185	34.2	39.8	7.3	33.1	48.2	54	-5.8	Noise floor
4.874	33.3	33.4	4.3	29.9	41.1	54	-12.9	Noise floor V
7.311	33.5	35.8	5.2	34.2	40.3	54	-13.7	Noise floor
12.185	34.2	39.8	7.3	33.1	48.2	54	-5.8	Noise floor
								Channel 11
2.4835	31.8	29	3.1	32.2	31.7	54	-22.3	Noise floor V (Bandedge)
4.924	33.5	33.5	4.3	29.7	41.6	54	-12.4	Noise floor
7.386	33.5	35.9	5.2	34.1	40.5	54	-13.5	Noise floor
12.310	34	40	7.3	32.8	48.5	54	-5.5	Noise floor
4.924	33.5	33.5	4.3	29.7	41.6	54	-12.4	Noise floor H
7.386	33.5	35.9	5.2	34.1	40.5	54	-13.5	Noise floor
12.310	34	40	7.3	32.8	48.5	54	-5.5	Noise floor
2.4835	31.8	29	3.1	32.2	31.7	54	-22.3	Noise floor (Bandedge)

Notes: DID NOT VIEW ANY EMISSIONS IN RESTRICTED BANDS TO INCLUDE HARMONICS.

Photographs—Radiated Emissions

Front

Rear

Section 9. Peak Power Spectral Density

NAME OF TEST: Peak Power Spectral Density	PARA. NO.: 15.247(d)
TESTED BY: Chinda Poy	DATE: 6/12/01

Test Results: Complies.

Measurement Data: See attached plots.

Equipment Used: 1464-1465-1045

Measurement Uncertainty: +/- 1.6 dB

Test Data – Peak Power Density Spectral

Nemko Dallas, Inc.

Dallas Headquarters:
802 N. Kealy
Lewisville, TX 75057
Tel: (972) 436-9600
Fax: (972) 436-2667

Data Plot **Power Spectral Density**

Page 1 of 3 Complete X
Job No.: 1L0357R Date: 6/12/01 Preliminary
Specification: 15.247 Temperature(°C): 24
Tested By: Chinda Poy Relative Humidity(%) 50
E.U.T.: Wireless LAN
Configuration: TX
Sample Number: S01
Location: Lab 2 RBW: Refer to plots
Detector Type: Peak VBW: Refer to plots

Test Equipment Used

Antenna: Directional Coupler:
Pre-Amp: Cable #1: 1045
Filter: Cable #2:
Receiver: 1464 Cable #3:
Attenuator #1 1465 Cable #4:
Attenuator #2: Mixer:
Additional equipment used:
Measurement Uncertainty: +/-1.6 dB

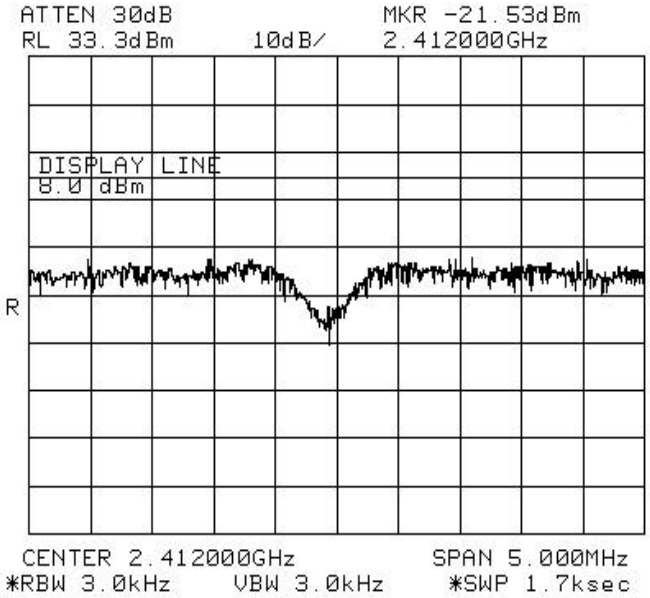

Notes: **Transmit Low Channel**
Channel = 1

Test Data – Peak Power Density Spectral

Dallas Headquarters:
802 N. Kealy
Lewisville, TX 75057
Tel: (972) 436-9600
Fax: (972) 436-2667

Nemko Dallas, Inc.

Data Plot Power Spectral Density

Page 2 of 3

Job No.:	1L0357R	Date:	6/12/01
Specification:	15.2	Temperature(°C):	24
Tested By:	Chinda Poy	Relative Humidity(%)	50
E.U.T.:	Wireless LAN		
Configuration:	TX		

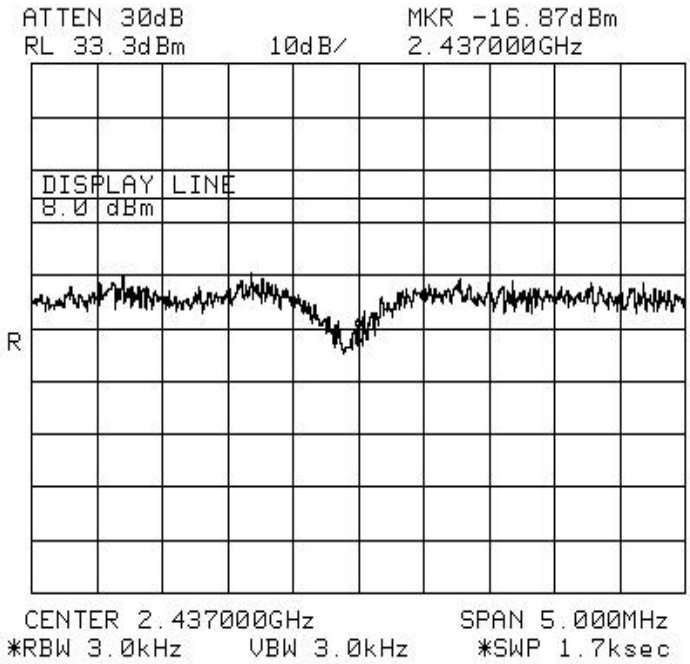

Notes: **Transmit Mid Channel**
Channel = 6

Test Data – Peak Power Density Spectral

Dallas Headquarters:
802 N. Kealy
Lewisville, TX 75057
Tel: (972) 436-9600
Fax: (972) 436-2667

Nemko Dallas, Inc.

Data Plot Power Spectral Density

Page 3 of 3

Job No.:	1L0357R	Date:	6/12/01
Specification:	15.247	Temperature(°C):	24
Tested By:	Chinda Poy	Relative Humidity(%)	50
E.U.T.:	Wireless LAN		
Configuration:	TX		

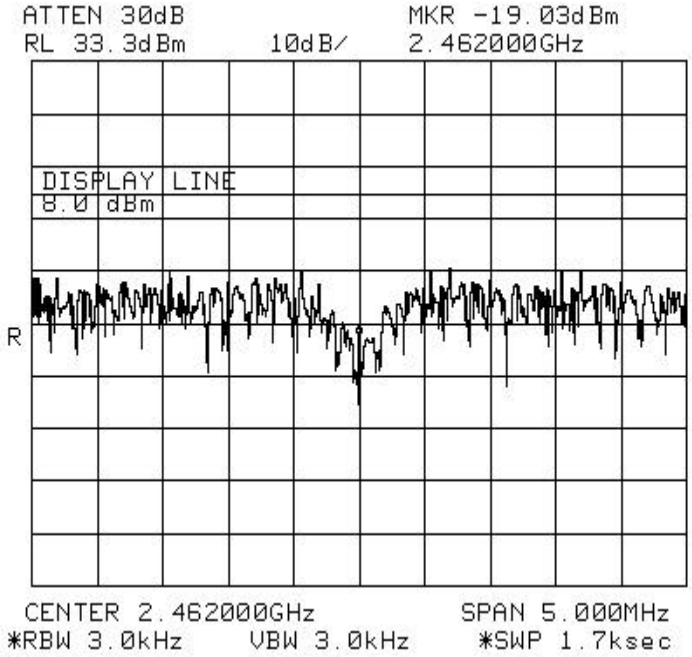

Notes: **Transmit High Channel**
Channel = 11

Section 10. Minimum Processing Gain

NAME OF TEST: Minimum Processing Gain	PARA. NO.: 15.247(e)

Test Results: Complies. The processing gain of the system is 12.9 dB.

Measurement Data: See data in separate Processing Gain report.

:

Section 11. Test Equipment List

ASSET	Description	Manufacturer Model Number	Serial Number	Cal. Date	Cal. Due
1464	Spectrum analyzer	Hewlett Packard 8563E	3551A04428	01/02/01	01/02/02
1465	10 db Attenuator DC 8.0 Ghz	Midwest Microwave 292/10db	NONE	CBU	N/A
1045	CABLE 2m	Astrolab Inc. 32027-2-29094-72TC	N/A	06/01/01	06/01/02
1528	CABLE 4M 2.0-18.0 Ghz	Storm PR90-010-144	00-07-001	11/04/00	11/04/01
704	FILTER, HIGH PASS, 5 KHz	SOLAR 7930-5.0	933126	11/04/00	11/04/01
1976	CABLE .5m	KTL RG223	N/A	12/16/00	12/16/01
1534	CABLE, 9M	KTL RG223	NA	06/13/01	06/13/02
1502	Quasi Peak Adapter	HP A208051	2521A00620	08/29/00	08/29/01
1523	LIMITER	FISCHER FCC-450-1.25-N	446	03/12/01	03/12/02
1029	PEAK POWER METER	HP 8900D	3303U0012	03/12/01	03/12/02
1030	PEAK POWER SENSOR	HP 84811A	2539A03573	03/12/01	03/12/02
1469	10 db Attenuator DC 18 Ghz	MCL Inc. BW-S10W2 10db-2WDC	NONE	CBU	N/A
993	Horn antenna	A.H. Systems SAS-200/571	XXX	07/16/99	09/16/01
791	PREAMP, 25dB	ICC LNA25	398	08/16/01	08/16/02
1482	Band Pass Filter	K & L 11SH10-4000/T12000-0/0	2	Cal B4 Use	N/A
1485	Cable 2.0-18.0 Ghz	Storm PR90-010-216	N/A	06/01/01	06/01/02
1484	Cable 2.0-18.0 Ghz	Storm PR90-010-072	N/A	06/01/01	06/01/02

ANNEX A - TEST DETAILS

NAME OF TEST: Powerline Conducted Emissions	PARA. NO.: 15.207(a)

Minimum Standard: The R.F. that is conducted back onto the AC power line on any frequency within the band 0.45 to 30 MHz shall not exceed 250µV (48 dBµV) across 50 ohms.

NAME OF TEST: Minimum 6 dB bandwidth	PARA. NO.: 15.247(a)(2)

Minimum Standard: The minimum 6 dB bandwidth shall be at least 500 kHz

NAME OF TEST: Maximum Peak Output Power	PARA. NO.: 15.247(b)(1)

Minimum Standard: The maximum peak output power shall not exceed 1 watt.

If transmitting antennas of directional gain greater than 6 dBi are used, the power shall be reduced by the amount in dB that the directional gain of the antenna exceeds 6 dBi.

Systems operating in the 2400-2483.5 MHz band that are used exclusively for fixed, point to point operation may employ transmitting antennas with directional gain greater than 6 dBi provided the maximum peak output power is reduced by 1 dB for every 3 dB that the directional gain of the antenna exceed 6 dBi.

Systems operating in the 5725 – 5850 MHz band that are used exclusively for fixed, point-to-point operation may employ transmitting antennas with directional gain greater than 6 dBi without any corresponding reduction in transmitter peak output power.

Direct Measurement Method For Detachable Antennas:
If the antenna is detachable, a peak power meter is used to measure the power output with the transmitter operating into a 50 ohm load. The dBi gain of the antenna(s) employed shall be reported.

Calculation Of EIRP For Integral Antenna:
If the antenna is not detachable from the circuit then the Peak Power Output is derived from the peak radiated field strength of the fundamental emission by using the plane wave relation $GP/4\pi R^2 = E^2/120\pi$ and proceeding as follows:

$$P = \frac{E^2R^2}{30G} = \frac{E^2 3^2}{30G}$$

where,

P = the equivalent isotropic radiated power in watts
E = the maximum measured field strength in V/m
R = the measurement range (3 meters)
G = the numeric gain of the transmit antenna in relation to an isotropic radiator

The RBW of the spectrum analyzer shall be set to a value greater than the measured 6 dB occupied bandwidth of the E.U.T.

Number of channels tested:

Tuning range	Number of channels tested	Channel location in band
1 MHz or less	1	middle
1 to 10 MHz	2	top and bottom
more than 10 MHz	3	top, middle, bottom

NAME OF TEST: RF Exposure	PARA. NO.: 15.247(b)(4)

Minimum Standard: Systems operating under the provisions of this section shall be operated in a manner that ensures the public is not exposed to radio frequency energy levels in excess of the Commission's guidelines stipulated in 1.1307(b)(1) of CFR 47.

NAME OF TEST: Spurious Emissions(conducted) PARA. NO.: 15.247(c)

Minimum Standard: In any 100kHz bandwidth outside the frequency band in which the transmitter is operating, emissions shall be at least 20 dB below the fundamental emission or shall not exceed the following field strength limits. Emissions falling in the restricted bands of 15.205 shall not exceed the following field strength limits:

Frequency (MHz)	Field Strength (mV/m @ 3m)	Field Strength (dB @ 3m)
30 - 88	100	40.0
88 - 216	150	43.5
216 - 960	200	46.0
Above 960	500	54.0

THE SPECTRUM IS SEARCHED TO THE 10th HARMONIC OF THE HIGHEST FREQUENCY GENERATED IN THE EUT.

Method Of Measurement:

30 MHz - 10th harmonic plot
RBW: 100 kHz
VBW: 300 kHz
Sweep: Auto
Display line: -20 dBc

Lower Band Edge
RBW: At least 1% of span/div.
VBW: >RBW
Span: As necessary to display any spurious at band edge.
Sweep: Auto
Center Frequency: 902 MHz, 2400 MHz, or 5725 MHz
Marker: Peak of fundamental emission
Marker Δ: Peak of highest spurious level below center frequency.

Upper Band Edge
RBW: At least 1% of span/div.
VBW: >RBW
Span: As necessary to display any spurious at band edge.
Sweep: Auto
Center Frequency: 928 MHz, 2483.5 MHz, or 5850 MHz
Marker: Peak of fundamental emission
Marker Δ: Peak of highest spurious level above center frequency.

Number of channels tested:

Tuning range	Number of channels tested	Channel location in band
1 MHz or less	1	middle
1 to 10 MHz	2	top and bottom
more than 10 MHz	3	top, middle, bottom

NAME OF TEST: Radiated Spurious Emissions PARA. NO.: 15.247(c)

Minimum Standard: In any 100kHz bandwidth outside the frequency band in which the transmitter is operating, emissions shall be at least 20 dB below the fundamental emission or shall not exceed the following field strength limits:

Emissions falling in the restricted bands of 15.205 shall not exceed the following field strength limits:

Frequency (MHz)	Field Strength (mV/m @ 3m)	Field Strength (dB @ 3m)
30 - 88	100	40.0
88 - 216	150	43.5
216 - 960	200	46.0
Above 960	500	54.0

THE SPECTRUM WAS SEARCHED TO THE 10th HARMONIC

15.205 Restricted Bands

MHz	MHz	MHz	GHz
0.09-0.11	16.42-16.423	399.9-410	4.5-5.25
0.495-0.505	16.69475-16.69525	608-614	5.35-5.46
2.1735-2.1905	16.80425-16.80475	960-1240	7.25-7.75
4.125-4.128	25.5-25.67	1300-1427	8.025-8.5
4.17725-4.17775	37.5-38.25	1435-1626.5	9.0-9.2
4.20725-4.20775	73-74.6	1645.5-1646.5	9.3-9.5
6.125-6.218	74.8-75.2	1660-1710	10.6-12.7
6.26775-6.26825	108-121.94	1718.8-1722.2	13.25-13.4
6.31175-6.31225	123-138	2200-2300	14.47-14.5
8.291-8.294	149.9-150.05	2310-2390	15.35-16.2
8.362-8.366	156.52475-156.52525	2483.5-2500	17.7-21.4
8.37625-8.38675	156.7-156.9	2655-2900	22.01-23.12
8.41425-8.41475	162.0125-167.17	3260-3267	23.6-24.0
12.29-12.293	167.72-173.2	3332-3339	31.2-31.8
12.51975-12.52025	240-285	3345.8-3358	36.43-36.5
12.57675-12.57725	322-335.4	3600-4400	Above 38.6
13.36-13.41	1718		

Number of channels tested:

Tuning range	Number of channels tested	Channel location in band
1 MHz or less	1	middle
1 to 10 MHz	2	top and bottom
more than 10 MHz	3	top, middle, bottom

NAME OF TEST: Transmitter Power Density	PARA. NO.: 15.247(d)

Minimum Standard: The transmitted power density averaged over any 1 second interval shall not be greater than +8 dBm in any 3 kHz bandwidth.

Method Of Measurement: The spectrum analyzer is set as follows:

RBW: 3 kHz
VBW: >3 kHz
Span: => measured 6 dB bandwidth
Sweep: Span(kHz)/3 (i.e. for a span of 1.5 MHz the sweep rate is 1500/3 = 500 sec.
LOG dB/div.: 2 dB

Note: For devices with spectrum line spacing =< 3 kHz, the RBW of the analyzer is reduced until the spectral lines are resolved. The measurement data is normalized to 3 kHz by summing the power of all the individual spectral lines within a 3 kHz band in linear power units.

For Devices With Integral Antenna:

For devices with non-detachable antennas, the received field strength is peaked and the spectrum analyzer is set as above. The peak emission level is then measured and converted to a field strength by adding the appropriate antenna factor and cable loss. This field strength is then converted to an equivalent isotropic radiated power using the same method as described for Peak Power output.

Number of channels tested:

Tuning Range	Number Of Channels Tested	Channel Location In Band
1 MHz or Less	1	Middle
1 to 10 MHz	2	Top And Bottom
More Than 10 MHz	3	Top, Middle, Bottom

NAME OF TEST: Processing Gain	PARA. NO.: 15.247(e)

Minimum Standard: The processing gain shall be at least 10 dB.

Method Of Measurement: The CW jamming margin method was used to determine the processing gain. A CW signal generator is stepped across the passband of the receiver in 50 kHz increments. At each point the signal generator level required to obtain the recommended bit error rate is recorded. The jammer to signal ratio (J/S) is then calculated. The worst 20% of the J/S points is discarded. The lowest remaining J/S ratio is used to calculate the processing gain.

Calculation Of Processing Gain:

The processing gain was determined by measuring the jamming margin of the E.U.T. and using the following formula:

Jamming Margin = G_p - $(S/N)_{out}$ - L_{sys}

For a receiver using non-coherent detection the value $(S/N)_{out}$ is calculated using the formula:

$P_e = (1/2)EXP\{-E/2N_o\}$ where P_e is the probability of error (minimum Bit Error Rate required for proper operation).

E/N_o is $(S/N)_{out}$
for example, for a bit error rate of 10^{-4} a S/N ratio of 12.3 dB is required.

$L_{sys\ (system\ losses)}$ is assumed to be 2 dB.

Therefore $G_p = Mj + (S/N)_{out} + L_{sys}$

Measurement performed at a channel in the center of the operating band of the EUT.

ANNEX B - TEST DIAGRAMS

Test Site For Radiated Emissions

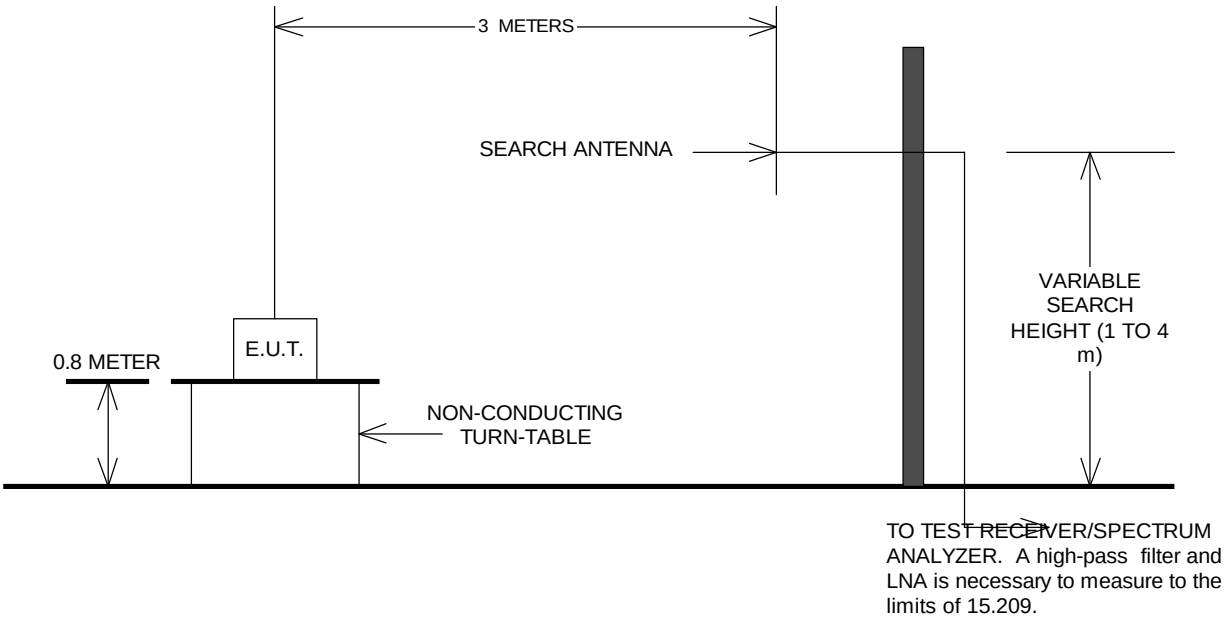

Conducted Emissions

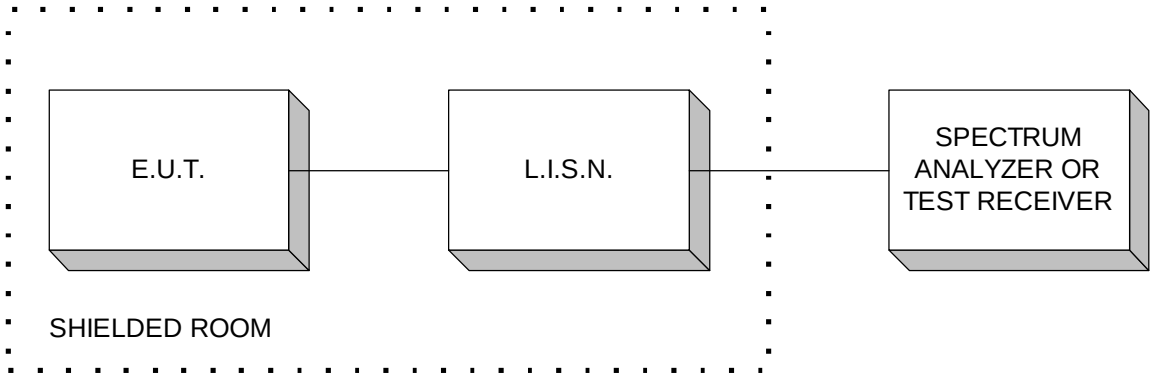

Peak Power At Antenna Terminals

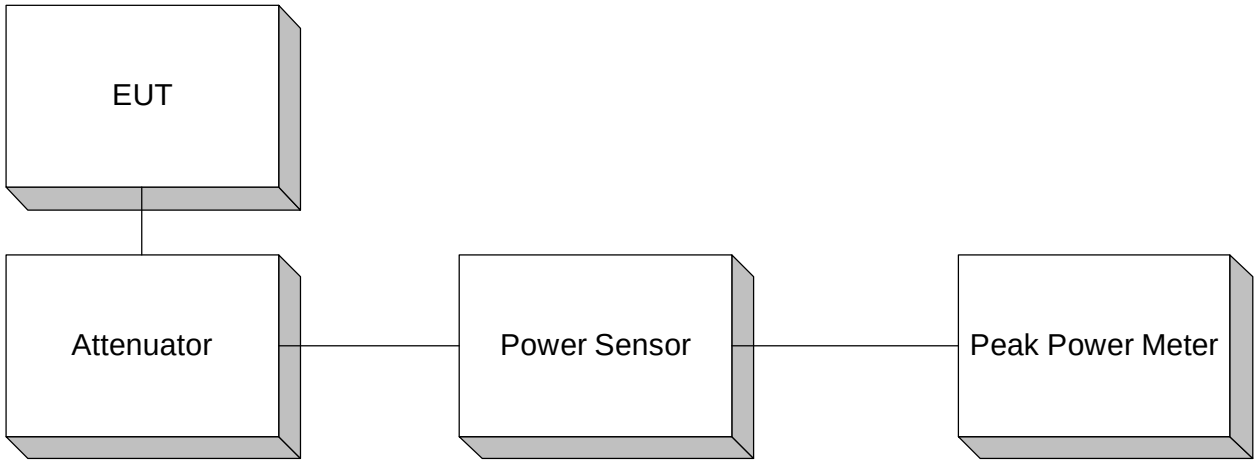

Minimum 6 dB Bandwidth
Peak Power Spectral Density
Spurious Emissions (conducted)

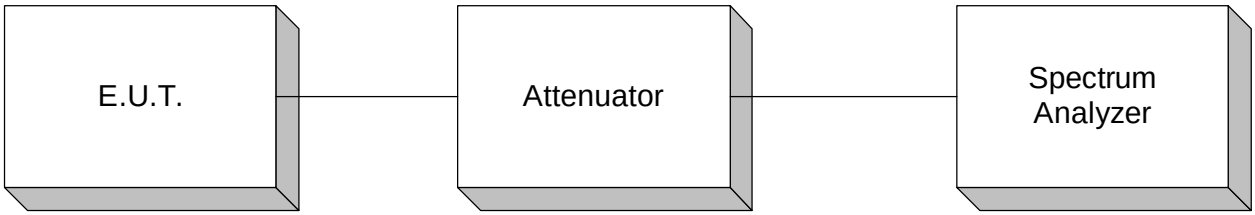
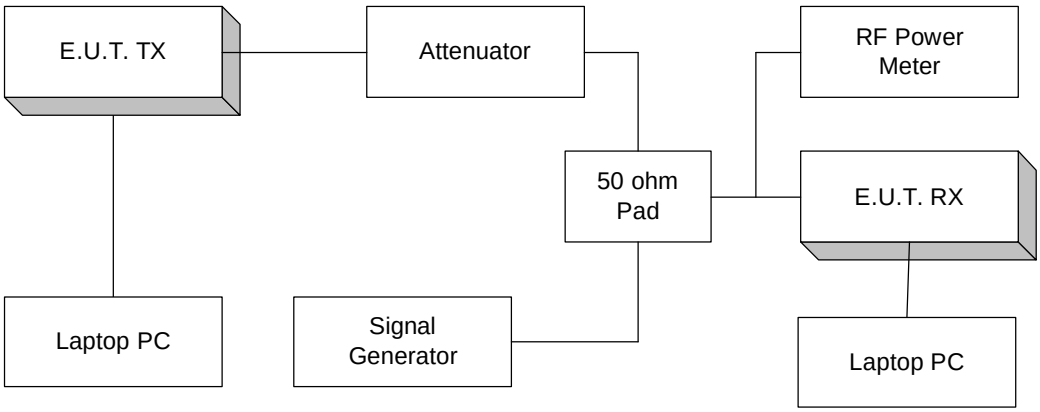
Processing Gain