Infinition Inc. BR-10XX Doppler Radar

Tuning Procedure

Transmitter Power Tuning

The transmitter of the radar unit can operate at two different power levels. The power level can be selected by the operator using the toggle switch located on the antenna function panel. The transmitter can be set either to low or high power. There is a LED indicator on the function panel to warn the operator when the transmitter is in high power mode.

The tuning of the transmitter power is done by adjusting the amount of attenuation applied on the microwave signal in the Power Amplifier (PA). The attenuation is set by the voltage applied on the PA attenuator terminal. This function is under the control of the antenna controller board (assy# 1000090-001). This board has two miniature potentiometers that are used to fine-tune the output power.

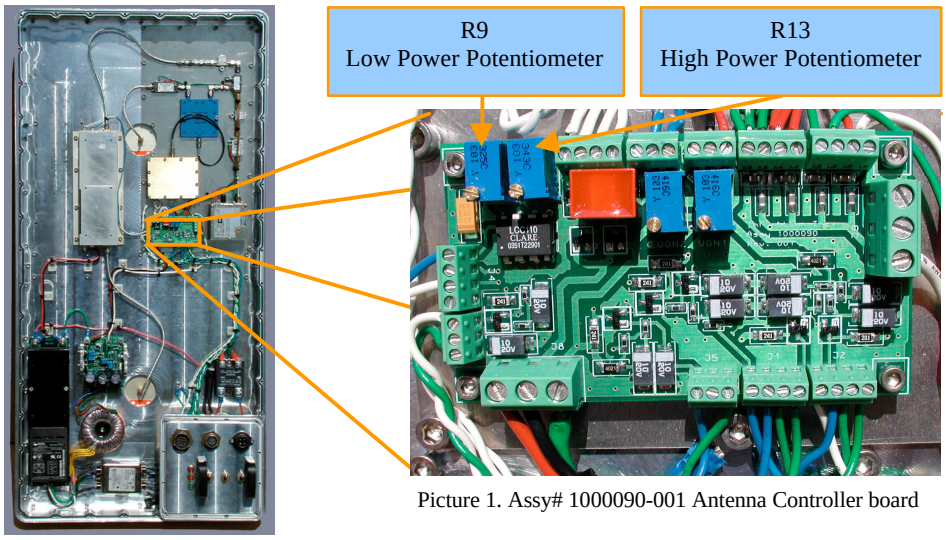

Picture 1. Assy# 1000090-001 Antenna Controller board

This document presents the procedure to adjust the transmitter power at the antenna port for both transmitter levels supported by the radar (see table 1).

Radar Function Panel Transmitter Power Switch Position	Description	Output Power
Down	Low Transmitter Power	20 dBm (100 mW)
Up	High Transmitter Power	33 dBm (2 W)

Table 1. Radar Output Power.

The signal level can be measured using either a spectrum analyzer or a microwave power meter.

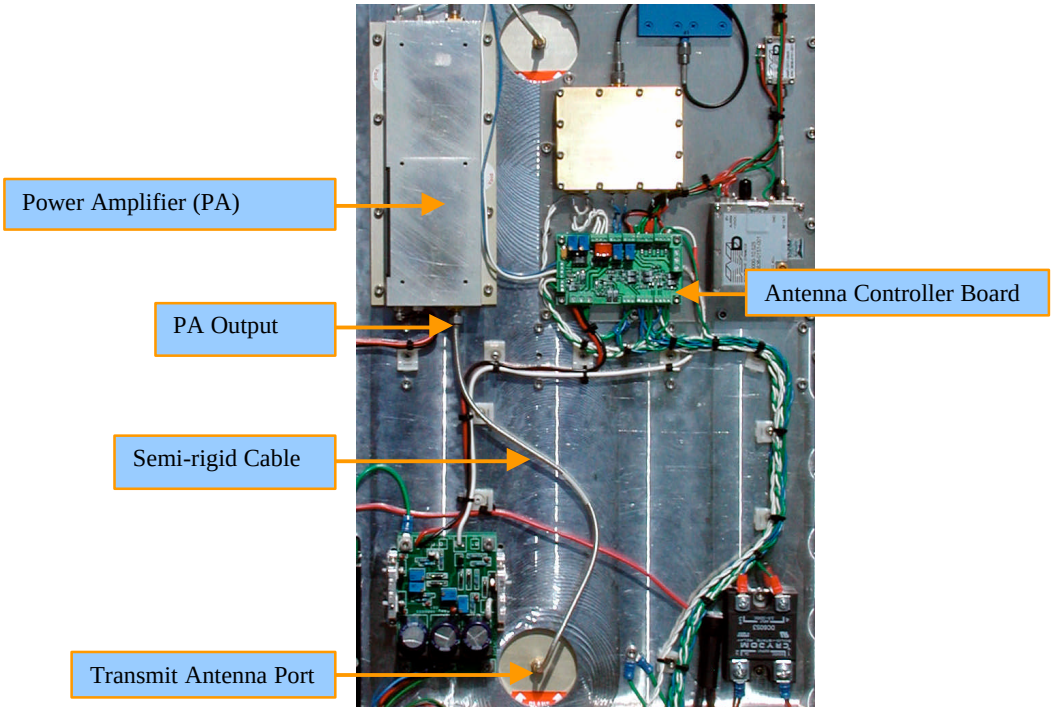

Picture 2. Radar Transmitter

First, the antenna must be connected to the main supply and switched off. The semi-rigid cable between the antenna and the PA must be removed. Then, the measuring instrument (a spectrum analyzer or a power meter) must be connected to the PA output. For measuring at high power level, it can be required to use a high power attenuator in order to bring the signal level in the usable range of the measuring instrument.

To tune the output power at the “Low” setting, the transmitter power control switch on the antenna function panel must be set to “Low”. Once the measuring instrument is properly connected to the PA output, the antenna as well as the transmitter can be swithed on using the appropriate control switches on the function panel. The potentiometer R9 can then be used to fine tune the PA output to obtain 20dBm at the antenna port.

To tune the output power at the “High” setting, the transmitter power control switch on the antenna function panel must be set to “High”. Once the measuring instrument is properly connected to the PA output, the antenna as well as the transmitter can be swithed on using the appropriate control switches on the function panel. The potentiometer R13 can then be used to fine tune the PA output to obtain 33dBm at the antenna port.