# FCC Part 15 Sub-Part B & C
# EMI Test Report

on

## Condor / Raven Meter
**[FCC ID: PDVCONRAV]**

models

## AD16-H13S / NT3 / L (Condor) &
## AD20-H13S / NT3 (Raven)

applicant


**Metering Technology Corporation**
**360 El Pueblo Drive**
**Scotts Valley, California 95066 USA**


evaluated and prepared by


**International Technology Company (ITC)**
**9959 Calaveras Road, Box 543**
**Sunol, California 94586-0543**
**Tel: (925) 862-2944**
**Fax: (925) 862-9013**
**Email: itcemc@aol.com**
**Web Site: www.itcemc.com**


Deutscher Akkreditierungs Rat

**EN45001 Accredited Compliance Laboratory (RES-GmbH)**
**Registration number: TTI-P-G 159 / 98-00 (RES-GmbH)**

## Part 1
## General Information

| | | |
|---|---|---|
| **Product Name**<br>**FCC ID**<br>**Model(s)** | Condor / Raven Meter<br>PDVCONRAV<br>AD16-H13S / NT3 / L (Condor) & AD20-H13S / NT3 (Raven) | |
| **Manufacturer's Name:**<br>**Manufacturer's Address**<br><br><br>**Contact:** | Metering Technology Corporation<br>360 El Pueblo Drive<br>Scotts Valley, California 95066 USA<br>Tel: 831-438-9999<br>Mr. Vijay Dhingra | <br><br><br>Fax: 831-440-9988<br>vdhingra@metertech.com |
| **Test Laboratory** | International Technology Company (ITC)<br>9959 Calaveras Road, PO Box 543<br>Sunol, CA 94586-0543<br>Tel: (925) 862-2944<br>Email: itcemc@aol.com | <br><br><br>Fax: (925) 862-9013<br>Web Site: www.itcemc.com |
| **Test & Report Numbers**<br>**Test Date & Issue Date**<br>**Total No. of Pages**<br>**Project Technician** | 20010410-1<br>April 10 – 16, 2001<br>21<br>Elijah Garcia & O'Lanre Owoborode | 0104FRS110-1<br>April 17, 2001 |

According to testing performed at International Technology Company (ITC); the above-mentioned unit is in compliance with the emissions requirements defined in FCC Part 15 B and C. It is the manufacturer's responsibility to assure that additional production units of this model are manufactured with identical electrical and mechanical characteristics. Any modifications necessary for compliance made during testing on the above mentioned date(s) must be implemented in all production units for compliance to be maintained.

### Emissions Requirements

1. Powerline Conducted Emissions in a shielded room utilizing two LISN's per 47 CFR §15.207.
2. Radiated Emissions in a 3-meter open area site per 47 CFR §15.209 and §15.31(m).
3. Harmonics and Spurious Emissions Test in accordance with the FCC test procedure 47 CFR §2.1053 and §15.231.
4. Maximum Peak Output Power Test Requirement in accordance with 47 CFR §15.231.
5. DSS Processing Gain Calculation of NCI Module
6. ERP Calculation per EIA / IS-19-B-1988 & TIA / EIA / IS-137-A-1996
7. MPE Calculation

The results show that the sample equipment tested as described in this report is in compliance with the FCC Rules Part 15, SubPart B: Powerline Conducted Emissions, Open Field Radiated Emissions. Occupied Bandwidth, Harmonics and Spurious Emissions and Maximum Peak Output Power test requirement limits of, SubPart C.

Michael Gbadebo, PE
**Engineering Manager**

## Declaration / Disclaimer

International Technology Company (ITC) reports apply only to the specific samples tested under stated test conditions. It is the manufacturer's responsibility to assure that additional production units of this model are manufactured with identical electrical and mechanical components. International Technology Company (ITC) shall have no liability for any deductions, inferences or generalizations drawn by the client or others from International Technology Company (ITC) issued reports.

This report is the confidential property of the client. As a mutual protection to our clients, the public and ourselves, extracts from the test report shall not be reproduced except in full without our written approval. The client / applicant / manufacturer may not use this report to claim product endorsement by NVLAP or any US Government agency.

**International Technology Company (ITC) is:**

Accepted by the Federal Communications Commission (FCC) for FCC Methods, CISPR Methods and AUSTEL Technical Standards (Ref: NVLAP Lab Code 200172-0)

Approved by the Industry Canada for Telecom Testing

Certified by Rockford Engineering Services GmbH for EMC Testing according to the European EMC Directive 89 / 336 / EEC per EN45001

Certified by Reg. TP for EMC Testing according to the European EMC Directive 89 / 336 / EEC per EN45001 for RES GmbH (DAR-Registration number: TTI-P-G 159 / 98-00)

Certified by the Voluntary Control Council for Interference by Information Technology Equipment (VCCI) for EMC testing, in accordance with the Regulations for Voluntary Control Measures, Article 8, Registration Numbers - Site 1: C-714 and R-696; Site 2: C-715 and R-697

## Engineering Services Offered by ITC

### 1) Reliability / Environmental Consulting And Services

- Reliability Svcs. for Systems & Components
- MTBF Calculations
- MTTF Calculations
- Temperature Cycling Testing
- Thermal Shock Testing
- Vibration Shock Testing

### 2) Engineering Evaluation & Testing

- OSHA Third Party Evaluations
- SEMI S2 Reviews, 1993
- USB Specification Evaluations / Testing
- SAE Specification Evaluations / Testing
- EIA / TIA Specifications i.e. 571-A and 631
- MIL-STD i.e. 461,462,1541 / EMC, 883 / ESD

### 3) Compliance Design Consultation and Regulatory Testing Services

**US: EMI / Telecom (FCC)**

FCC 15 / Class A
FCC 15 / Class B and DoC
FCC 15 / SubPart C
FCC 24
FCC 68 (Analog and Digital)
FCC 90
FCC 95

**Product Safety (UL / NRTL)**

**All UL Standards, Including:**
UL 1950 / ITE
UL 2601 / Medical
UL 1459 / Telecom
UL 1411 / Audio, Radio, TV
UL 813 / Commercial Audio
UL 1604 / Hazard. Location
UL 508 / Energy Mgmt. Equip.

**EU: EMI / EMC (EN)**

EN 50081-1 / 50081-2
EN 50082-1 / 50082-2
EN 55103-1 / 55103-2
EN 60601-1-2
EN 55011 / 55013 / 55014
EN 55015 / 55020 / 55022
EN 60555-2 / 60555-3
EN 61000-3-2 / 61000-3-3
EN 61000-4-2 / 61000-4-3
EN 61000-4-4 / 61000-4-5
EN 61000-4-6 / 61000-4-8 / 61000-4-11

**Canada: EMI, Safety, Telecom**

RSS 210 & RSS 221
Industry Canada / IC CS-03

**All c-UL Standards for Canada**
**All CSA Standards, including:**
CSA No. 950 / ITE
CSA No. 601-1 / Medical
CSA No. 1010-1 / Lab, Measurement
CSA No. 225 / Telecom

**Asia - Australia / International**

CISPR 11, 13, 14, 15, 16, 20, 22
VCCI Class 1 & 2 / Japan
AS / NZ 3548: C-Tick Mark, EMC
CNS 13438 - 1996 / Taiwan
ITU Standards
IEC / ETSI Standards
BellCore Standards
IEEE / ANSI Standards

EU: Safety / Machinery (EN)

EN 60950 / 61010-1
EN 60204 / 60065
EN 60601-1-1
TÜV
*Competent Body Representation / EU

### ITC – Your One-Stop-Shop

Our comprehensive capabilities, friendly environment & fast project turn-around time makes ITC the ideal **one-stop-shop** for your engineering services needs, providing manufacturers with compliance design consultation, reliability & compliance engineering. We are committed to delivering the highest-quality engineering services & expertise you can expect at reasonable, competitive rates. We look forward to working with you on your next design, reliability compliance or engineering consultation project. For more information, contact our Business Services Department.

### You can call or e-mail us at:

**Toll-Free:** 1-888-336-7625 – **Internet:** http://www.itcemc.com – **E-mail:** itcemc@aol.com

# Table of Contents


**Pages**

Part 1: General
General Information....2
1.1 Test Methodology....7
1.2 Summary....7
1.3 Support Equipment....7
1.4 Test Diagram....7

**Part 2: FCC Part 15 SubPart B, Powerline Conducted Emissions**
2.1 EUT Configuration....8
2.2 Test Procedure....8
2.3 Field Strength Calculation....8
2.4 Spectrum Analyzer Configuration....8
2.5 Administrative Details....9
2.6 Powerline Conducted Emissions Test Results....9

**Part 3: FCC Part 15 SubPart B, Open Field Radiated Emissions**
3.1 EUT Configuration....10
3.2 Test Procedure....10
3.3 Field Strength Calculation....10
3.4 Spectrum Analyzer Configuration....10
3.5 Administrative Details....11
3.6 Open Field Radiated Emissions Test Results....11

**Part 4: Fundamental Harmonic and Spurious Emissions**
4.1 EUT Configuration....12
4.2 Test Procedure....12
4.3 Spectrum Analyzer Configuration....12
4.4 Administrative Detail....13
4.5 Fundamental Harmonic and Spurious Emissions Test Results....13

**Part 5: FCC Part 15 SubPart C, RF Power Output**
5.1.1 EUT Configuration....14
5.1.2 Test Procedure....14
5.2 Maximum Peak Output Power Plot....15

# Table of Contents


**Pages**

**Tables**

2.6 Powerline Conducted Emissions ..... 9
3.6 Open Field Radiated Emissions ..... 11
4.5 Fundamental Harmonic and Spurious Emissions ..... 13

**Plot**

5.2 Maximum Peak Output Power ..... 15

Dwell Time Test ..... 16
DSS Processing Gain of NCI Module ..... 17
ERP & MPE Calculation ..... 18

**Appendices**

A: Test Equipment ..... 19-20
B: Modification ..... 21

## General Contd.

### 1.1. Test Methodology

The electromagnetic interference tests, which this report describes, were performed by an independent electromagnetic compatibility consultant, International Technology Company, in accordance with the FCC test procedure as specified in ANSI C63.4-1992.

### 1.2. Test Facility

The open area test site, the conducted measurement facility, and the test equipment used to collect the emissions data is located in Sunol, California, and is fully described in site attenuation report. The approved site attenuation description is on file at the Federal Communications Commission.

### 1.3. Support Equipment included in the Tests:

The Condor / Raven Meter was supported with the following peripherals

| No. | Description | Manufacturer | Model | Serial Number | FCC ID |
|---|---|---|---|---|---|
| 1 | Computer | Compaq | Presario | Not Provided | DoC Approved |
| 2 | Monitor | Viewsonic | VCDTS21442-1M | ME90702466-1M | DoC Approved |
| 3 | Mouse | Compaq | M-S489 | Not Provided | JNZ201213 |
| 4 | Keyboard | Compaq | SK-2800 | Not Provided | GYUR66SK |
| 5 | Transceiver | Innovatec | 922 | 070 | OWS-922 |

### 1.4. Tests Setup Diagram

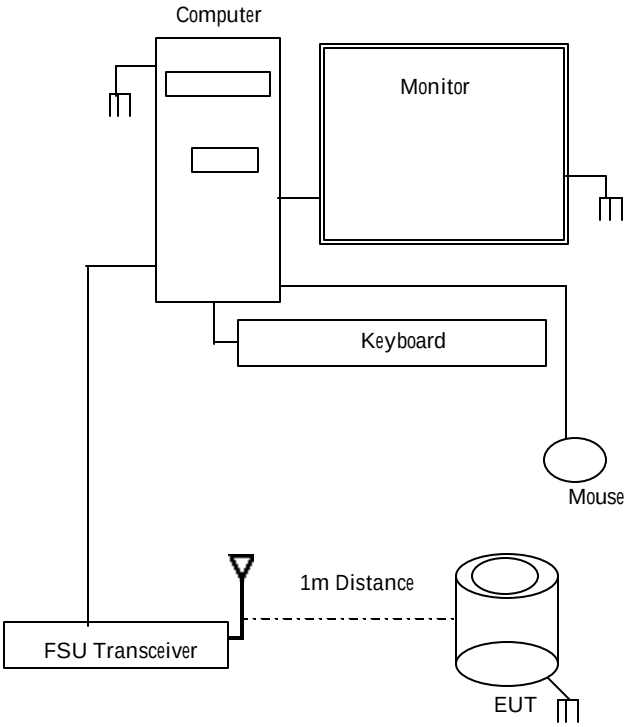

# Part 2
# Powerline Conducted Emissions
# Per FCC Part 15 Subpart B

## 2.1. EUT Configuration

Pre-scan measurements are first performed by collecting data with a spectrum analyzer. Significant peaks are marked and then quasi-peaked. Measurement range investigated was from 450KHz to 30MHz. The Condor / Raven Meter was set up in accordance with the suggested configuration given in FCC Measurement Procedure ANSI C63.4-1992. The measurement instrumentation used was a receiver with bandwidth parameters as stipulated in ANSI C63.4-1992. The EUT was set up on a wooden non-conductive tabletop, 80 cm above the ground reference plane, in a shielded room. It was connected to peripherals as listed and sketched in the previous page, to transmit in a continuous mode. Excess cords of the equipment were left to dangle towards the LISN. Grounding was through the power cord and voltage was 120Vac.

## 2.2 . Test Procedure

The NCI was transmitting continuously with modulation turned on. The Condor / Raven Meter was operated in a worst-case condition of orientation. The power line conducted EMI tests were run on the current carrying conductor of the power cords of the EUT. The highest line conducted emissions were also analyzed in detail by operating the spectrum analyzer in fixed tuned mode to determine the precise amplitude of the emissions.

## 2.3 . Data Table Legend and Field Strength Calculation

'Margin' indicates the degree of compliance with the applicable limit. For example, a margin of -8 dB means that the emission is 8 dB below the limit (in compliance). A margin of +4 dB means that the emission is 4 dB over the limit (out of compliance). The margin is calculated as follows::

Margin = Corrected Amplitude - Limit; where Corrected Amplitude = Amplitude + Cable Loss - Distance Factor.
the amplitude measured in a quasi peak mode.

## 2.4 . Spectrum Analyzer Configuration (during swept frequency scans)

Start Frequency..... 450 KHz
Stop Frequency ..... 30MHz
Sweep Speed .....Manual
Resolution Bandwidth..... 10KHz
Video Bandwidth ..... 10KHz
Quasi Peak Adapter Bandwidth .....9KHz
Quasi Peak Adapter Mode.....Normal

# Powerline Conducted Emissions
# Per FCC Part 15 SubPart B

## 2.5. Administrative Details

| | |
|---|---|
| **Test Date(s)** | April 10, 2001 |
| **Emission Limits** | Class B |
| **Temperature / Humidity** | 29.5°C / 62% |
| **Test Technician(s)** | Elijah Garcia |

## 2.6. Test Results

The table below shows a summary of the highest conducted emissions on all current carrying conductors of the EUT power cord compared to the FCC Class B limit.

### EUT in Transmitting and Receiving Mode

| Indicated Frequency MHz | Amplitude dBuV | Cable Loss dB | Corrected Amplitude dBuV | Condition | Ground | FCC 15 Limit dBuV | Class A Margin dB | FCC 15 Limit dBuV | Class B Margin dB |
|---|---|---|---|---|---|---|---|---|---|
| .480 | 38.8 | 1.0 | 39.8 | Neutral | Connected | 60.0 | -20.2 | 48.0 | -8.2 |
| .510 | 40.4 | 1.0 | 41.4 | Hot | Connected | 60.0 | -18.6 | 48.0 | -6.6 |
| 15.230 | 42.0 | 1.0 | 43.0 | Hot | Connected | 69.5 | -26.5 | 48.0 | -5.0 |
| 15.550 | 39.5 | 1.0 | 40.5 | Neutral | Connected | 69.5 | -29.0 | 48.0 | -7.5 |
| 26.570 | 28.5 | 1.0 | 29.5 | Neutral | Connected | 69.5 | -40.0 | 48.0 | -18.5 |
| 27.050 | 34.2 | 1.0 | 35.2 | Neutral | Connected | 69.5 | -34.3 | 48.0 | -12.8 |
| 27.400 | 18.6 | 1.0 | 19.6 | Hot | Connected | 69.5 | -49.9 | 48.0 | -28.4 |

No emissions of significant levels were observed between 450 KHz and 30 MHz.

## Conclusion:

The Condor / Raven Meter meets the requirements of the test reference for Powerline Conducted Emissions.

# Part 3
# Open Field Radiated Emissions
# Per FCC Part 15 Subpart B

## 3.1. EUT Configuration

Similar to the test set for powerline conducted emissions, the EUT along with its associated peripherals were setup for radiated emissions scanning in an open field. Frequency measurement was taken from 30MHz to the 10th harmonic.

## 3.2. Test Procedure

The EUT was set up as described above, in a transmitting and receiving mode, using the FSU as the transmitting source. It was rotated 360 degrees azimuth and the search antenna height varied 1to 4 m in order to maximize the emissions from the EUT. The highest emissions were also analyzed in detail by operating the spectrum analyzer in fixed tuned mode to determine the precise amplitude of the emissions.

## 3.3. Data Table Legend and Field Strength Calculation

'Margin' indicates the degree of compliance with the applicable limit. For example, a margin of -8 dB means that the emissions are 8 dB below the limit (in compliance); +a margin of +4 dB means that the emission is 4 dB over the limit (out of compliance). The margin calculated as follows:

Margin = Corrected Amplitude - Limit, where Corrected Amplitude = Amplitude + Antenna Correction Factor + Cable Loss - Distance Factor, measured in quasi peak mode.

## 3.4. Spectrum Analyzer Configuration (during swept frequency scans)

Start Frequency ..... 30MHz
Stop Frequency ..... 1000MHz
Sweep Speed ..... Manual

**Measurements below 1GHz**

RES Bandwidth ..... 100 KHz
Video Bandwidth ..... 100 KHz
Quasi Peak Adapter Mode ..... Normal
Quasi peak Adapter Bandwidth ..... 120 KHz

**Measurements above 1GHz (unless stated otherwise)**

Analyzer Mode ..... Video Filter
RES Bandwidth ..... 1MHz
Video Bandwidth ..... 1MHz
Freq. Span ..... 3MHz
Offset ..... 0dB
Quasi Peak Adapter Mode ..... Disabled

# Open Field Radiated Emissions
# Per FCC Part 15 SubPart B

## 3.5. Administrative Details

| | |
|---|---|
| **Test Date(s)** | April 11, 2001 |
| **Emission Limits** | Class B |
| **Distance** | 10M Field |
| **Test Technician(s)** | O'Lanre Owoborode |
| **Antenna Used** | Biconical Antenna, model # EMCO 3104, S / N 3459 and Log Periodic Antenna, model # EMCO 3146, S / N 2075 (calibrated 01 / 19 / 2001, next calibration due date is 01 / 19 / 2002) |

## 3.6. Test Results

The table below shows a summary of the highest amplitudes of the radiated emissions from the equipment under test at various antenna heights, antenna polarization, and EUT orientations.

| Indicated Frequency MHz | Amplitude dBuV / M | Antenna dB | Cable dB | Correction Amplitude dBuV / M | T / Tab Angle Degree | Height M | Antenna Polarization | FCC 15 Limit dBuV / M | Class B Margin dB |
|---|---|---|---|---|---|---|---|---|---|
| 49.16 | 11.0 | 7.7 | 2.7 | 21.4 | 180 | 1.0 | VB | 40.0 | -18.6 |
| 62.05 | 11.8 | 8.3 | 2.9 | 23.0 | 0 | 1.0 | VB | 40.0 | -17.0 |
| 65.40 | 11.0 | 7.9 | 2.9 | 21.8 | 0 | 1.0 | VB | 40.0 | -18.2 |
| 66.50 | 13.6 | 7.5 | 2.9 | 24.0 | 0 | 1.0 | VB | 40.0 | -16.0 |
| 75.90 | 21.0 | 4.1 | 3.2 | 28.3 | 315 | 1.0 | VB | 40.0 | -11.7 |
| 75.90 | 13.7 | 4.1 | 3.2 | 21.0 | 180 | 2.0 | HB | 40.0 | -19.0 |
| 78.05 | 13.2 | 3.7 | 3.2 | 20.1 | 45 | 2.5 | HB | 40.0 | -19.9 |
| 85.07 | 9.0 | 3.9 | 3.3 | 16.2 | 45 | 1.0 | VB | 40.0 | -23.8 |
| 132.00 | 6.0 | 10.2 | 4.2 | 20.4 | 0 | 1.0 | VB | 43.0 | -22.6 |
| 199.96 | 5.0 | 12.3 | 5.2 | 22.5 | 135 | 1.0 | HB | 43.0 | -20.5 |
| 200.00 | 14.3 | 9.2 | 5.2 | 28.7 | 135 | 2.0 | HL | 43.0 | -14.3 |
| 204.00 | 12.3 | 9.3 | 5.3 | 26.9 | 135 | 1.0 | VL | 43.0 | -16.1 |
| 286.30 | 9.7 | 12.6 | 6.6 | 28.9 | 180 | 1.0 | VL | 46.0 | -17.1 |
| 286.40 | 13.0 | 12.6 | 6.6 | 32.2 | 180 | 2.0 | HL | 46.0 | -13.8 |
| 333.30 | 6.7 | 12.5 | 7.4 | 26.6 | 180 | 1.0 | HL | 46.0 | -19.4 |
| 747.50 | 4.5 | 18.8 | 12.2 | 35.5 | 0 | 1.0 | VL | 46.0 | -10.5 |

No emissions of significant levels were observed between 30 MHz and 1000MHz. There were no significant emissions above 1GHz.

## Conclusion

The Condor / Raven Meter meets the requirements of the test reference for Open Field Radiated Emissions.

# Part 4
# Fundamental Harmonic & Spurious Emissions
# Per FCC Part 2 Section 47 CFR §2.1053 & Part 15 Section 47 CFR §15.231(e)

## 4.1. EUT Configuration

The Condor / Raven Meter was set up in accordance with the suggested configuration given in FCC Measurement Procedure ANSI C63.4-1992. The measurement instrumentation used was Hewlett Packard 8566B and 8569A Spectrum Analyzers with detector and bandwidth parameters as stipulated in C63.4-1992. At frequencies above 1GHz, average measurements, if necessary, were made using the video filter method and quasi peak detector and preselector functions were disabled.

## 4.2. Test Procedure

The EUT was placed on the test table and configured for maximum response to transmit continuously. Signal strength was monitored with HP 8566B and HP8569A Spectrum Analyzers, below and above the center frequencies using an appropriate receiving antenna. Maximum emissions were obtained by varying the height of the antennas and then orienting the turntable in 360-degree turns with the analyzer in the manual mode. Unless stated otherwise, the antenna to EUT distance was 1 meter. The measurements are peak below 1 GHz and average measurements above 1 GHz

## 4.3. Spectrum Analyzer Configuration (During Swept Frequency Scans)

Start Frequency ..... 30 MHz
Stop Frequency ..... 1,000MHz
Sweep Speed ..... Manual
RES Bandwidth ..... 100KHz
Video Bandwidth ..... 100 KHz
Quasi Peak Adapter Mode ..... Normal
Quasi peak Adapter Bandwidth ..... 120 KHz

→ Fundamental

**Measurements above 1GHz (unless stated otherwise)**

Analyzer Mode ..... Video Filter
RES Bandwidth ..... 1MHz
Video Bandwidth ..... 1MHz
Freq. Span ..... 1GHz
Offset ..... 0dB
Sweep Speed ..... 30mSec
Fundamental Frequency ..... 792.3MHz
Amplitude Gain ..... 30dB
Quasi Peak Adapter Mode ..... Disabled

→ Harmonics

## 4.4. Administrative Details

| | |
|---|---|
| **Test Date(s)** | April 12-13, 2001 |
| **Emission Limits** | Class C |
| **Test Technician(s)** | O'Lanre Owoborode |

## 4.5. Test Results

The table below shows a summary of the highest amplitudes of the radiated emissions from the equipment under test at various antenna heights, antenna polarizations, and EUT orientations.

| Indicated Frequency MHz | Amplitude dBuV/M | Antenna dB | Cable dB | Corrected Amplitude dBuV/M | Height M | Antenna Polarization | FCC 15 Limit dBuV/M | Class C Margin dB |
|---|---|---|---|---|---|---|---|---|
| 1.580 | 26.4 | 16.1 | 2.00 | 44.5 | 1.0 | VB | 54.0 | -9.50 |
| 2.379 | 10.5 | 23.3 | 4.73 | 38.53 | 1.0 | VB | 54.0 | -15.47 |
| 3.168 | 10.2 | 25.5 | 5.16 | 40.86 | 1.0 | VL | 54.0 | -13.14 |
| 3.960 | 5.3 | 26.4 | 5.43 | 37.13 | 1.0 | HL | 54.0 | -16.87 |
| 4.752 | 2.7 | 28.2 | 5.50 | 36.40 | 1.0 | VL | 54.0 | -17.60 |
| 5.546 | 3.2 | 28.8 | 6.74 | 38.74 | 1.0 | VH | 54.0 | -15.26 |
| 6.337 | 4.8 | 32.9 | 8.63 | 46.33 | 1.0 | VH | 54.0 | -7.67 |
| 7.131 | 2.1 | 33.1 | 9.31 | 44.51 | 1.0 | VH | 54.0 | -9.49 |
| 7.923 | 1.8 | 33.6 | 10.8 | 46.20 | 1.0 | VH | 54.0 | -7.80 |

No emissions of significant levels were observed.

## Conclusion

The Condor / Raven Meter meets the requirements of the test reference for Harmonics and Spurious Emissions.

# Part 5
# Maximum Peak Output Power
# Per FCC Part 15 Section 47 CFR §15.231 (e)

## 5.1. EUT Configuration

The Condor / Raven Meter was set up in accordance with the suggested configuration given in FCC Measurement Procedure ANSI C63.4-1992. The measurement instrumentation used was a Hewlett Packard 8569B Spectrum Analyzer with detector and bandwidth parameters as stipulated in C63.4-1992.

## 5.2. Test Procedure

The Condor / Raven Meter was placed on the test table. The EUT was configured for maximum response by transmitting continuously. Signal was monitored with a HP 8566B Spectrum Analyzer, using the EMCO Double-Ridged Waveguide Horn Antenna, model 3115. Unless stated otherwise, the antenna to EUT distance was 1 meter.

**RF power output** = Measured value + antenna correction + cable correction – Amplifier Gain (if provided)

The plot in the next page shows that transmitted power 60dBuV(30mW) is lower than the specified maximum limit of 73.9dBuV (37mW)

39.2 – 10(DF) + 12.8 (CL) + 18 (AF) = 60dBuV

**Legends**

DF Distance Factor
CL Cable Loss
AF Antenna Factor

## 5.3. Maximum Peak Output Power
## Per FCC Part 15 Section 47 CFR §15.231 (e)

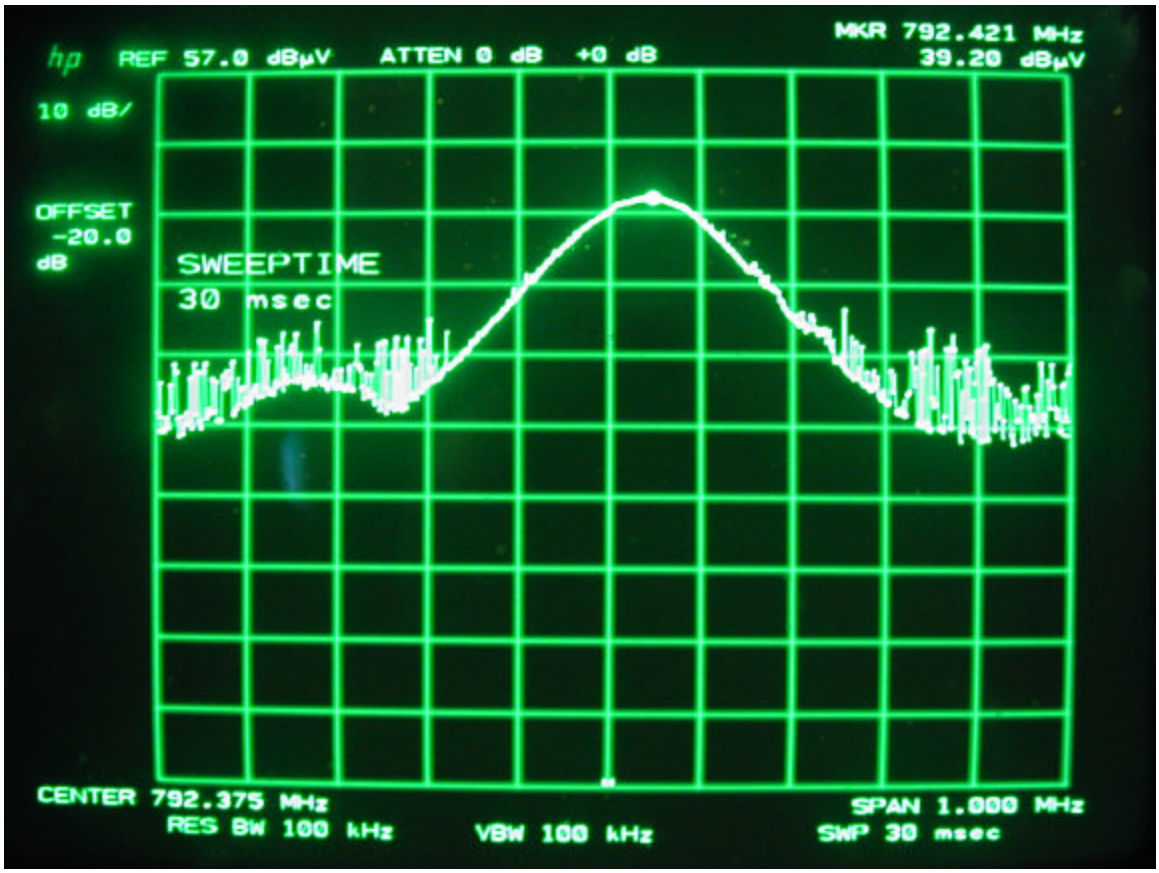

## 6. Dwell Time Test
## Per FCC Part 15 Section 47 CFR §15.231

Dwell Time is 680mS
Interval between Operations is >10 sec.

NB. Plot will be provided later.

## 7. DSS Processing Gain Calculation of LAN (NCI) Module

- The Transmit module generates the spread spectrum binary sequence for output to the RF modulator (directly modulated VCO.

- The Transmitter logic encodes two consecutive bits of data into one of four possible 32- bit (chip) PN sequences. Consequently, an improvement in the signal to noise ratio is achieved since each pair of the data bit is now represented by 32 chips. The improvement, or processing gain in decibel is calculated as:

  Processing Gain = 10 log (32chips / 2 bits)
  Processing Gain = 12 dB

- The Transmitted PN sequence is further randomized by modulus-2 addition with a fixed 2047-bit PN sequence. This operation smoothes (spectral Whitens) the output spectrum by eliminating discrete spectral components.

## 8. ERP Calculation

**Test:** RF Power Output Radiated
**Specification:** 47 CFR 2.1046(a)
**Guide:** EIA / IS-19-B-1988 & TIA / EIA / IS-137-A-1996

### Radiated Measurement Procedure

The EUT was placed on an open-field site and its radiated field strength at a known distance was measured by means of a spectrum analyzer. Data packets were transmitted numerous times, while the receiving antenna placed 3 meters from the transmit antenna captured the signal power. Equivalent loading was calculated from the equation.

$P_t = ((E \times R)^2 / 49.2)$ watts, where R = 3m.

E = Signal amplitude in v / m
Measurement accuracy is ±1.5dB

| Frequency MHz | dBuV / m | Corr. Factor dBuV / m | Corr. Amp. dBuV / m | V / m @ 3m | ERP Watts |
|---|---|---|---|---|---|
| 792.3 | 29.2 | 18.8 | 12.0 | 1000 | 0.183µW |

$60dB\mu V/M = Log^{-1}(60/20)$

$60dB\mu V/M = 10^3 \mu V/M = 1000\mu V/M$

$$
\begin{aligned}
P &= (E \times R)^2 / 49.2 \\
&= (1000 \times 3)^2 / 49.2 \\
&= (10^{-3} \times 3)^2 = \frac{(3 \times 10^{-3} V)^2}{49.2} \\
&= (9 \times 10^{-6}) / 49.2 \\
&= 0.183 \times 10^{-6} \\
&= 0.183\mu Watt = 183nWatt
\end{aligned}
$$

### RF Safety Exposure per FCC Requirement

The Maximum Permissible Exposure (MPE) distance per ANSI C95.1 table 2 for uncontrolled environment is $f$ (MHz) / 1500 [mW / cm$^2$]. The numeric value of the gain for the antenna is 2(3dBi). Therefore power density is:

$1000mW \times 2.0 / (4\pi r^2) = 792 / 1500 [mW / cm^2]$

$r = [(792MHz / 1500mW / cm^2)(4\pi) / 1000mW]^{1/2}$

**r = 8.1cm**

Therefore, the maximum calculated MPE distance r is 8.1cm. The installation instructions shall indicate that at least 10.1cm (8.1 + 2 margin) separation shall be provided between the antenna and the people.

# Appendix A
# Test Equipment

Some or all of the following test equipment is currently used to measure the conducted and/or radiated emissions from the equipment under test:

| Test Equipment | Manufacturer & Model Number | Serial Number | Calibration Date | Next Calibration Due Date |
|---|---|---|---|---|
| Spectrum Analyzer | Hewlett Packard 8590A | 2752 A02715 | 02/19/2001 | 02/19/2002 |
| Spectrum Monitor | Rhode & Schwarz EZM | 881 334/025 | 02/19/2001 | 02/19/2002 |
| Test Receiver (9 KHz - 30 MHz) | Rhode & Schwarz ESH3 | RES 0753 | 02/23/2001 | 02/23/2002 |
| Test Receiver (20-1300 MHz) | Rhode & Schwarz ESVP | RES 0749 | 02/22/2001 | 02/22/2002 |
| Spectrum Analyzer | Hewlett-Packard 8566B | 2618A02909 | 02/20/2001 | 02/20/2002 |
| Spectrum Analyzer | Hewlett-Packard 8567A | 2602A00239 | 02/20/2001 | 02/20/2002 |
| Spectrum Analyzer Display (Site 1) | Hewlett-Packard 8590A | 2542A11954 | 02/21/2001 | 02/21/2002 |
| Spectrum Analyzer Display (Site 2) | Hewlett-Packard 85662A | 2542A12593 | 03/01/2001 | 03/01/2002 |
| Quasi Peak Adapter (Site 1) | Hewlett-Packard 85650 | 2521A00871 | 03/01/2001 | 03/01/2002 |
| Quasi Peak Adapter (Site 2) | Hewlett-Packard 85650A | 2521A00737 | 02/21/2001 | 02/21/2002 |
| Preselector (Site 1) | Hewlett-Packard 85685A | 2620A00265 | 03/01/2001 | 03/01/2002 |
| Preselector (Site 2) | Hewlett-Packard 85685A | 2648A00462 | 02/21/2001 | 02/21/2002 |
| Preamp | Hewlett-Packard 8447D | 2648A04855 | 03/01/2001 | 03/01/2002 |
| Preamp | Hewlett-Packard 8449B | 3008A00101 | 03/01/2001 | 03/01/2002 |
| Computer | HP 000/300 | RES 449 | N/A | N/A |
| Absorbing Clamp | MDS21 | 891 092/025 | 05/16/2000 | 05/16/2001 |
| Antenna Cable (OPTK45) | RG8/u | - | N/A | N/A |
| Antenna System | EMCO 3230 | - | N/A | N/A |
| Biconical Antenna (Site 1) | EMCO 3104 | 3459 | 02/25/2001 | 02/25/2002 |
| Biconical Antenna (Site 2) | EMCO 3104C | 9111-4463 | 02/23/2001 | 02/23/2002 |
| Log Periodic Antenna (Site 1) (200-1000 MHz) | EMCO 3146 | 2075 | 02/25/2001 | 02/25/2002 |
| Log Periodic Antenna (Site 2) (200-1000 MHz) | EMCO 3146 | 9510-4202 | 02/12/2001 | 02/12/2002 |
| Adj. Element Dipole Antenna (28 MHz-1 GHz) | EMCO 3120 | 2632 | 02/19/2001 | 02/19/2002 |
| Horn Antenna | Eaton 96001 | 2632 | 02/20/2001 | 02/20/2002 |
| LISN (25 Amp) | EMCO 38825/2 | 9210-2008 | 02/20/2001 | 02/20/2002 |
| LISN (100 Amp) | Solar 8610-50-TS-100N | | 02/19/2001 | 02/19/2002 |
| LISN | EMCO 3825/2R | 1188/1001 | 02/22/2001 | 02/22/2002 |

## Test Equipment

| Test Equipment | Manufacturer & Model Number | Serial Number | Calibration Date | Next Calibration Due Date |
|---|---|---|---|---|
| Remote Controlled 8 ft Rotating Table | RES RT1 | Not Provided | N/A | N/A |
| Remote Controlled 25 ft Rotating Table | RES RT2 | Not Provided | N/A | N/A |
| Remote Controlled 4 ft Rotating Table | RES RT3, RT4, RT5 | Not Provided | N/A | N/A |
| Remote Controlled 4 m Antenna Mast | RES AM1 | Not Provided | N/A | N/A |
| Remote Controlled 6 m Antenna Mast | RES AM2 & AM3 | Not Provided | N/A | N/A |
| 3 Phase 220 VAC / 50 Hz Generator | Not Provided | DB7130B40 | 05/16/2000 | 05/16/2001 |
| Oscilloscope (300 MHz) | Tektronix 2465 | Not Provided | 05/16/2000 | 05/16/2001 |
| Digital Scope | Hitachi VC-6075 | Not Provided | 05/16/2000 | 05/16/2001 |
| Power Analyzer | Valhalla Scientific / 2101 | RES 574 | 05/16/2000 | 05/16/2001 |
| Digital Thermometer | Omega 440 | Not Provided | 05/16/2000 | 05/16/2001 |
| DC Computer System | Kepco JQE 150-1.5m | H177085 | 05/16/2000 | 05/16/2001 |

The spectrum analyzers are self-calibrated before every test and are calibrated to NIST standards annually. All of the other EMI equipment is calibrated on a monthly basis using the spectrum analyzers as standards.

## Appendix B
## Modification Letter

To whom it may concern:

This is to certify that **no modifications** were necessary for:

**Condor / Raven Meter, model AD16-H13S / NT3 / L (Condor) & AD20-H13S / NT3 (Raven)**

**To comply with**:

1. Powerline Conducted Emissions in a shielded room utilizing two LISN's per 47 CFR §15.207.
2. Radiated Emissions in a 3-meter open area site per 47 CFR §15.209 and §15.31(m).
3. Occupied Bandwidth Test in accordance with 47 CFR §15.247(2).
4. Harmonics and Spurious Emissions Test in accordance with 47 CFR §2.1053 and §15.249(a).
5. Maximum Peak Output Power Test Requirement in accordance with 47 CFR §15.247(b).

The results show that the sample equipment tested as described in this report is in compliance with the FCC Rules Part 15, SubPart B: Powerline Conducted Emissions, Open Field Radiated Emissions. Occupied Bandwidth, Harmonics and Spurious Emissions and Maximum Peak Output Power test requirement limits of, SubPart C.

For further information, please contact the manufacturer at

Metering Technology Corporation
360 El Pueblo Drive
Scotts Valley, California 95066 USA
Tel: 831-438-9999
Fax: 831-440-9988
Attention: Mr. Vijay Dhingra
vdhingra@metertech.com