Block Diagram

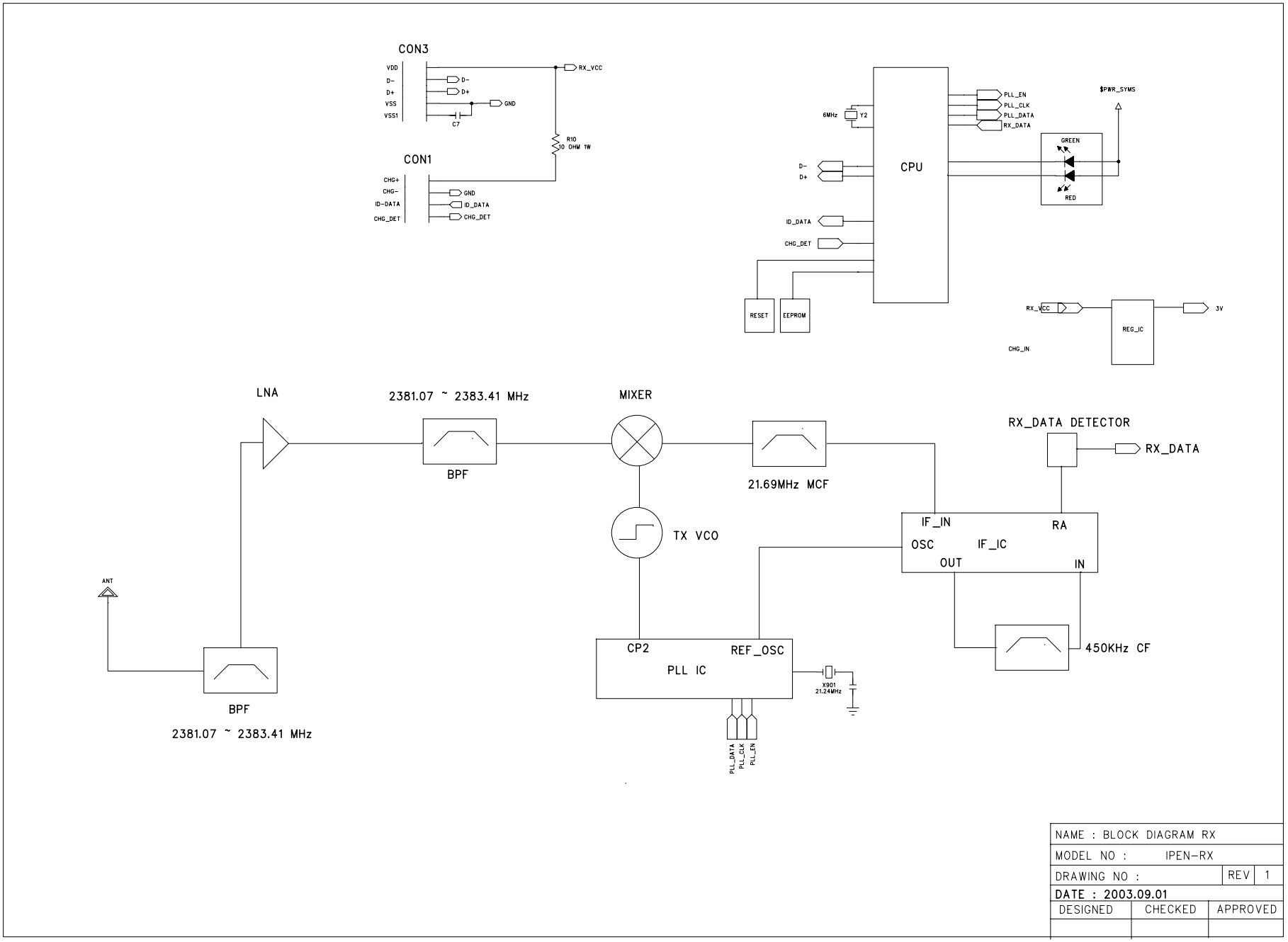

NAME : BLOCK DIAGRAM RX		
MODEL NO : IPEN-RX		
DRAWING NO :	REV	1
DATE : 2003.09.01		
DESIGNED	CHECKED	APPROVED