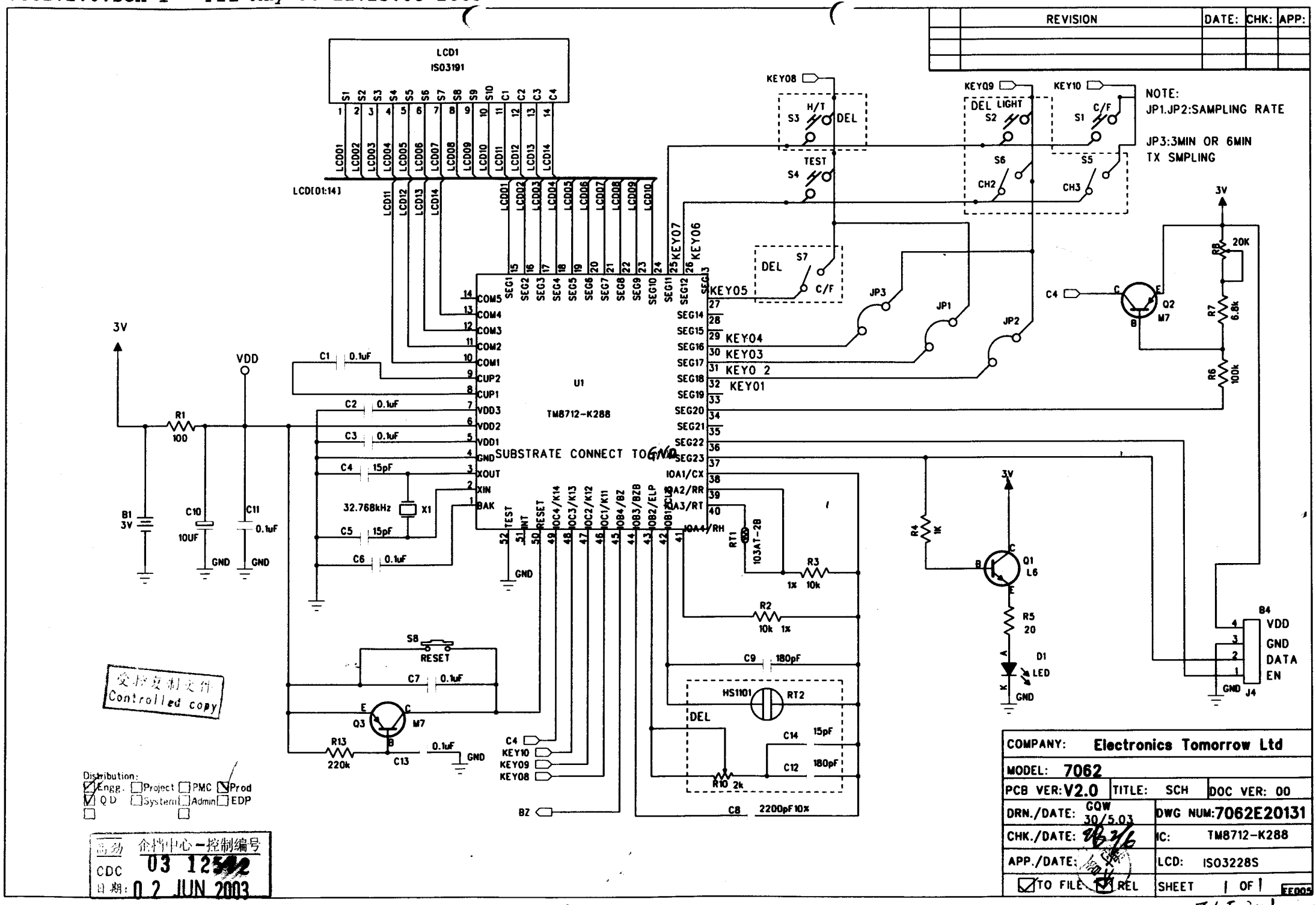
REVISION
DATE:
CHK:
APP:
LCD1
ISO3191
LCD[01:14]
NOTE:
JP1.JP2:SAMPLING RATE
JP3:3MIN OR 6MIN
TX SMPLING
KEY08
KEY09
KEY10
H/T
DEL
TEST
DEL LIGHT
C/F
CH2
CH3
KEY07
KEY06
KEY05
KEY04
KEY03
KEY0 2
KEY01
JP1
JP2
JP3
3V
VDD
U1
TM8712-K288
SUBSTRATE CONNECT TO GND
32.768kHz
X1
RESET
S8
HS1101
RT2
RT1
103AT-2B
Q1
L6
Q2
M7
Q3
LED
D1
B4
VDD
GND
DATA
EN
J4
BZ
Controlled copy
Distribution:
Engg.
Project
PMC
Prod
QD
System
Admin
EDP
COMPANY: Electronics Tomorrow Ltd
MODEL: 7062
PCB VER: V2.0
TITLE: SCH
DOC VER: 00
DRN./DATE: GQW 30/5.03
DWG NUM: 7062E20131
CHK./DATE:
IC: TM8712-K288
APP./DATE:
LCD: ISO3228S
TO FILE
REL
SHEET 1 OF 1
高易 企业中心-控制编号
CDC 03 12542
日期: 02 JUN 2003
7062E-30-1

NO.	REVISIONS	DATE:	CHK:	APP:

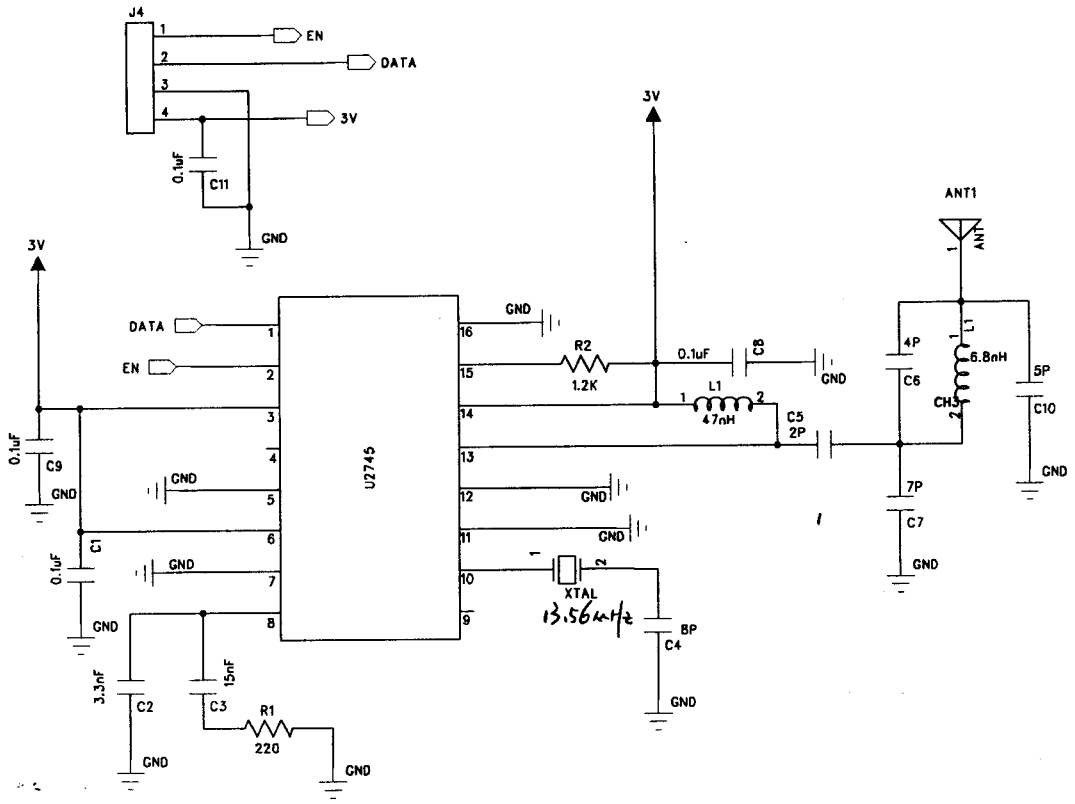

Distribution:

☒ Engg. ☐ F... ☐ PMC ☒ Prod
☒ QA ☐ System ☐ Admin. ☐ EDP
☐ MKT ☐

受控管制文件
Controlled copy

高勤 企檔中心-控制編號
CDC 02 08720
日期: 31 JUL 2002

COMPANY: Electronics Tommorrow Ltd.		
MODEL: 7060 / 7062		
PCB VER: V1.0	TITLE: SCH	DOC VER: 00
DRN./DATE: WJ 8/7.02	DWG NUM: 7060E10231	
CHK./DATE:	IC: U2745	
APP./DATE:	LCD:	
☑ TO FILE ☐ REL	SHEET 0f1/1	EE005

9/7 02 7060E-20-2