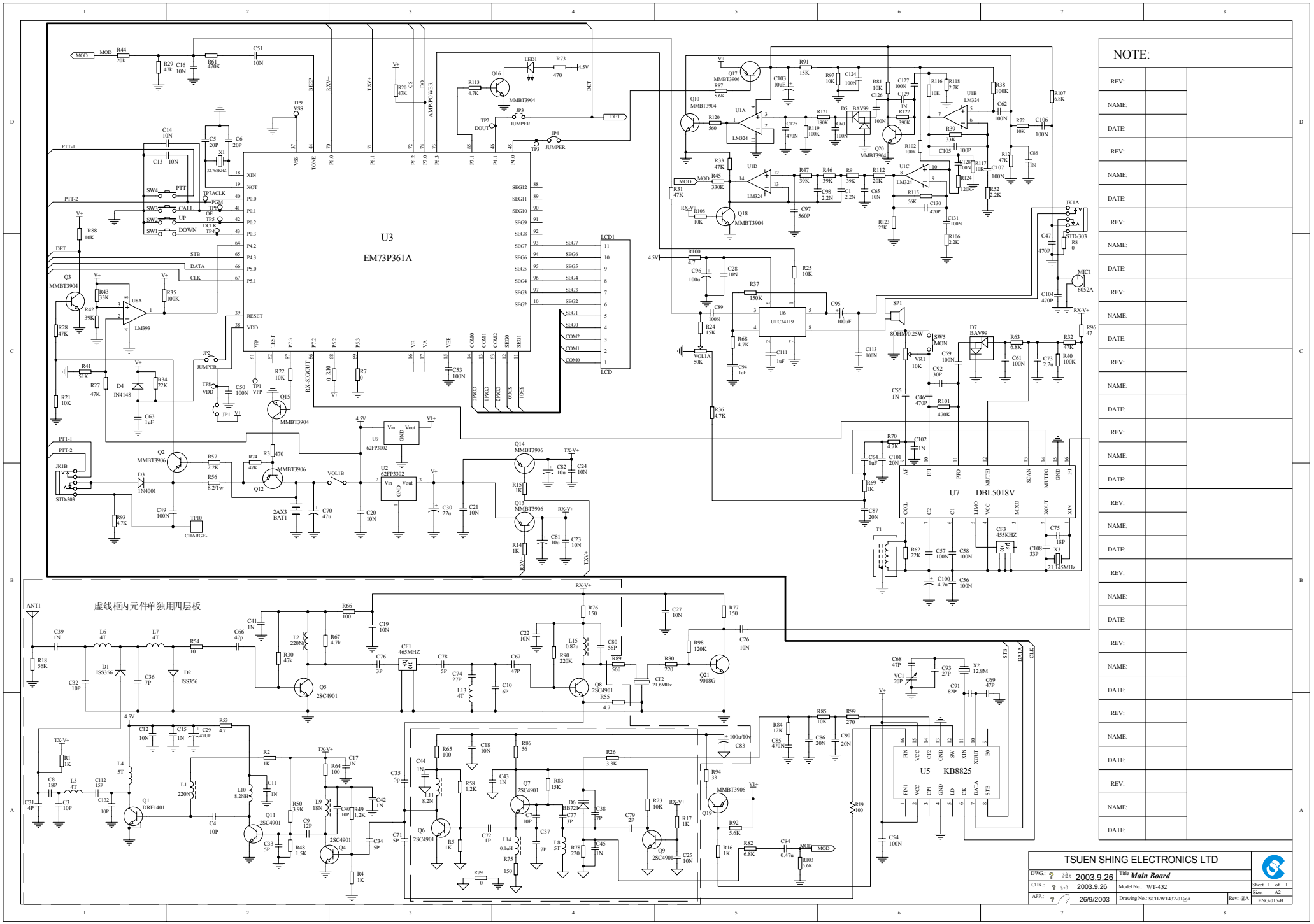
U3
EM73P361A
U7 DBL5018V
U5 KB8825
LCD1
LCD
虚线框内元件单独用四层板
NOTE:
REV:
NAME:
DATE:
TSUEN SHING ELECTRONICS LTD
DWG.: 2003.9.26
CHK.: 2003.9.26
APP.: 26/9/2003
Title: Main Board
Model No.: WT-432
Drawing No.: SCH-WT432-01@A
Rev.: @A
Sheet 1 of 1
Size: A2
ENG-015-B