Vieworks

VIVIX-S FW Detector Service Manual

(FXRD-3643FW / FXRD-4343FW / FXRD-2530FW)

CE 2460

© Vieworks. 2021 All rights reserved.

The specifications and related information in this manual may be changed without notice. Refer to Vieworks Download System (VDS) for the latest version of our manuals.

Under copyright laws, this manual should not be reproduced, in whole or in part, without the written permission of Vieworks. This document is basically produced in English, and can be produced in the language of the relevant country upon request of the customer.

Contents

1. Instruction 6

1.1 Document Guide 7

1.1.1 Caution 7

1.1.2 Target Audience 7

1.1.3 Symbols 7

1.1.4 Notations 7

1.1.5 Contact Us 8

1.2 Purpose of Use 9

1.2.1 Intended Use 9

1.2.2 Patient group 9

1.2.3 Contra-Indication 9

1.2.4 Features 9

1.3 Product Use 10

1.3.1 Product Usage 10

1.3.2 Disclaimer 10

1.3.3 Product Disposal 11

2. Product 12

2.1 Product Components 13

2.1.1 Detector 13

2.1.2 Battery Pack 14

2.1.3 SCU (System Control Unit) - Optional 14

2.1.4 Cradle (Optional) 16

2.1.5 Battery Charger (Optional) 16

2.1.6 Wireless Power Transmitter (Optional) 17

2.1.7 Accessories 18

2.2 FXRD-3643FAW 21

2.2.1 Specifications 21

2.2.2 Functions 22

2.2.3 Deco Sheet 24

2.2.4 Wireless Communication 25

2.2.5 Use Environment 25

2.2.6 Load Limit of Detector 27

2.3 FXRD-4343FAW 28

2.3.1 Specifications 28

2.3.2 Functions 29

2.3.3 Deco Sheet 32

2.4 FXRD-2530FAW 33
2.4.1 Specifications 33
2.4.2 Functions 34
2.4.3 Deco Sheet 36
2.5 Battery Pack (FXRB-04A) 37
2.5.1 Specifications 37
2.6 SCU Multi (FXRP-03A) - Optional 38
2.6.1 Specifications 38
2.6.2 Drawings 39
2.6.3 Functions 40
2.7 SCU mini (FXRS-04A) – Optional 41
2.7.1 Specifications 41
2.7.2 Drawings 41
2.7.3 Functions 42
2.8 Cradle (FXRR-01A) – Optional 44
2.8.1 Specifications 44
2.8.2 Drawings 44
2.8.3 Functions 45
2.9 Battery Charger (FXRC-04A) – Optional 46
2.9.1 Specifications 46
2.9.2 Drawings 46
2.9.3 Functions 47
2.10 Wireless Power Transmitter (FXRC-05A) – Optional 49
2.10.1 Specifications 49
2.10.2 Drawings 49
2.10.3 Functions 50
2.11 Others 51
2.11.1 X-ray Generator (Recommended Exposure Condition) 51
2.11.2 Recommended Specifications of Workstation (PC) 51
3. System Configuration 52
3.1 Detector Connection Methods 53
3.1.1 Wireless Connection 53
3.1.2 Wired Connection 54
3.2 Diagram 55
3.2.1 Block Diagram 55
3.2.2 Wiring Diagram 56

3.3 System Configuration 57
3.3.1 SCU AP Mode 57
3.3.2 External AP Mode 58
3.3.3 Detector AP Mode 59
3.3.4 Tether Interface Mode 60
3.3.5 Detector Stand-Alone Mode 61
3.4 Changing the Wireless Setting 62
3.4.1 Detector AP / Station 62
3.4.2 Preset Switching 63
3.4.3 Sync Wireless Settings 66
3.5 Generator Interface 67
3.5.1 AED (Auto Exposure Detection) Interface 67
3.5.2 Passive Trigger Interface 68
3.5.3 DR Trigger Interface 68
3.6 DR Trigger Interface 69
3.6.1 Trigger Interface Way 69
3.6.2 EXT_INF Port Pin Map 71
3.6.3 Input / Output Circuit 73
3.7 Radio Exposure Mode 74
3.7.1 AED (Auto Exposure Detection) Interface 74
3.7.2 Passive Interface 75
3.7.3 DR Trigger Interface 75
3.8 PF Exposure Mode 77
3.8.1 AED (Auto Exposure Detection) Interface- TBD 77
3.8.2 Passive Interface 78
3.8.3 DR Trigger Interface 79
3.9 AED Interface of Continuous Fluro Exposure Mode 80
3.9.1 AED (Auto Exposure Detection) Interface 80
3.9.2 Passive Interface 81
3.9.3 DR Trigger Interface 82
4. Settings 83
4.1 Product Installation 84
4.1.1 Connecting SCU mini (FXRS-04A) 84
4.1.2 Booting SCU mini (FXRS-04A) 86
4.1.3 Connecting SCU Multi (FXRP-03A) 86
4.1.4 Booting Up SCU Multi (FXRP-03A) 88
4.1.5 Booting up the Detector 88

4.1.6 Installing Wireless Power Transmitter (FXRC-05A) 89

4.2 Device Setting 93

4.2.1 Software Installation 93

4.2.2 Setting Detector and SCU 93

4.3 Diagnosis of Devices 94

4.3.1 Diagnosing Images 94

4.3.2 Diagnosing Battery Pack 95

4.3.3 Diagnosing Communication Status 96

4.3.4 Diagnosing Communication Speed 99

4.3.5 Self-Diagnosis 100

5. Maintenance 103

5.1 Product Initialization 104

5.1.1 SCU Initialization 104

5.1.2 Detector Initialization 105

5.1.3 Wireless Initialization of Detector 106

5.2 Detector Power Saving Function 107

6. Troubleshooting 109

6.1 Troubleshooting 110

6.1.1 Troubleshooting Guide 110

6.1.2 Fail to Turn the Detector On 110

6.1.3 The Power Switch of SCU or Status LED is not worked normally 110

6.1.4 Communication Test is failed 111

6.1.5 There is no problem in communication connection, but no image is acquired 111

6.1.6 Getting Abnormal Images 112

6.1.7 Battery Pack or Installation Part of Battery is Getting Hot 112

6.1.8 When an Error Number is Displayed on the OLED Display 112

7. Information 113

7.1 Service Information 114

7.1.1 Product Lifetime 114

7.1.2 Regular Inspection and Maintenance 114

7.1.3 Repair 114

7.1.4 Replacement Parts Support 114

7.1.5 Consumables 114

7.2 Warranty 115

7.3 Revision History 117

1. Instruction

This section gives basic information of this manual and products.

Document Guide

Intended Use

Product Use

1.1 Document Guide

This operation manual explains how to use the **VIVIX-S FW** detector models made by Vieworks, X-ray interface unit, and other peripheral equipment. Use this manual to set up the **VIVIX-S FW** detector as well as understand its various functions.

1.1.1 Caution

If the user is not fully acquainted with this manual, the product can be malfunctioned, or unsuspected problem can be happened due to carelessness. To prevent any medical accidents, the user should fully understand the instructions of this manual before operating this product.

1.1.2 Target Audience

This manual is intended for the users who set up and operate the **VIVIX-S FW** detector models.

1.1.3 Symbols

This product should be operated under the safety instructions with the warning or caution symbol in this manual. It is important for you to read and understand the contents to operate the products safely.

Caution

	• This symbol is used to indicate a potentially hazardous situation that may cause death, personal injury or substantial property damage if the instructions are ignored. Users should be well acquainted with this symbol and the related contents.

Information

	• This symbol is used for indicating product related references and supplementary information. Users are recommended to read the sentences with this notice carefully.

1.1.4 Notations

Bold Types

Words in bold indicate products terms, or the sentences which are needed to transmit clear meaning to the customers.

1.1.5 Contact Us

- This manual is provided in print format upon request by the customer.
- For comments or inquiries regarding this document and relevant products, contact via email below:

Item	Contents
Department	Customer Support Team at Vieworks
E-mail	CustomerSupport@vieworks.com

You can download this manual from VDS (Vieworks Download System) website: https://clouds.vieworks.com:5001/. To obtain an ID and password for manual download, please contact the customer support team in Vieworks.

1.2 Purpose of Use

1.2.1 Intended Use

VIVIX-S FW(FXRD-3643FW, 4343FW, and 2530FW) are digital flat panel detectors that is used for screening and diagnosis of disease of injury. These detectors are intended for use by a qualified/trained doctor or technician on both adult subjects for taking diagnostic radiographic exposures of the skull, spinal column, chest, abdomen, extremities, and other body parts.

1.2.2 Patient group

VIVIX-S FW is used to examine in patients with or suspected of muscle and bone injury, respiratory diseases. It is intended for general patients such as adults, children, and infants, but all radiography should be reviewed by a doctor in charge prior to beginning the examination.
The radiologist should use a proper technique considering the patient's size to decrease the radiation dose when he or she acquires diagnostic images.

1.2.3 Contra-Indication

These detectors are not intended to be used for mammography applications.

1.2.4 Features

- Since VIVIX-S FW detectors are compatible with a conventional film cassette, they enable to replace the analog radiographic diagnosis.
- VIVIX-S FW detectors provide high resolution digital images. The resolution varies depending on the models as follows.
  - **FXRD-3643FAW**: 99μm pixel pitch sensor (Approx. 15.3 Mega Pixels)
  - **FXRD-4343FAW**: 99μm pixel pitch sensor (Approx. 18.6 Mega Pixels)
  - **FXRD-2530FAW**: 99μm pixel pitch sensor, (Approx. 7.6 Mega Pixels)
- The scintillator provides CsI.
- VIVIX-S FW detectors support **IEEE 802.11n/ac** to acquire images without a wired connection in anytime, anywhere.
- Checks the connecting status of the detector and battery remains through OLED Display.
- Makes direct wireless communication with the built-in wireless AP function. (Inside AP™)
- Makes quick application of various functions with two buttons on the side of the detector.
- Easily changes the detector setting with NFC Card.
- Supports the stable and reliable AED (Auto Exposure Detection) function. (Anytime™)
- Designed for easy carrying
- You can use the product with cable connection (tether interface cable) depending on the using environment.

1.3 Product Use

This chapter provides instructions about the use of the product, disposal and the liability limit of Vieworks.

1.3.1 Product Usage

1 Only a physician or a legally certified operator should use this product.
2 The equipment should be kept in a safe and operable condition by maintenance personnel.
3 Follow the guidelines in this manual when installing and using this product.
4 Use only computers and image display monitors recommended in this manual.
5 Use only the dedicated cables provided with this product.
6 For details about installation and use of the product, consult your sales representative or a distributor.

1.3.2 Disclaimer

1 In no event shall Vieworks be liable for damage or loss arising from a fire, earthquake, any action or accident by a third party, any intentional or negligent action by users.
2 In no event shall Vieworks be liable for damage or loss arising from any trial usage, or other usage under abnormal conditions.
3 In no event shall Vieworks be liable for personal physical harm or property damage that is sustained when the instructions of this manual are not followed.
4 In no event shall Vieworks be liable for any damage arising from moving, alteration, inspection or repair the product by a person other than an authorized service engineer by Vieworks.
5 In no event shall Vieworks be liable for loss of image data for any reason while using this product.
6 Roentgenography, image processing, image reading, and image data storage must be performed in accordance with the laws of the country or region in which the product is being used.
7 The user is responsible for maintaining the privacy of image data acquired from this product.
8 It is the responsibility of the attending physicians to provide medical care services. Vieworks will not be liable for faulty diagnoses.
9 Specifications, composition, and appearance of this product may change without prior notice.

1.3.3 Product Disposal

Disposal of this product in an unlawful manner may have a negative impact on health and on the environment. When disposing of this product, therefore, be absolutely sure to follow the procedure that conforms to the laws and regulations applicable in your area.

European Union (and EEA*) only

This symbol indicates that this product is not to be disposed with your household waste, according to the WEEE Directive (2012/19/EC) and your national law.

This product should be handed over to a designated collection point, e.g., on an authorized one-for-one basis when you buy a new similar product or to an authorized collection site for recycling electrical and electronic equipment (EEE). Improper handling of this type of waste could have a negative impact on the environment and human health due to potentially hazardous substances that are generally associated with EEE. At the same time, your cooperation in the correct disposal of this product will contribute to the effective usage of natural resources. For more information on where you can drop off your waste equipment for recycling, please contact your local city office, waste authority, approved WEEE scheme, or your household waste disposal service.

*EEA: Norway, Iceland, and Liechtenstein

2. Product

This section gives an instruction about the product components and their specifications.

Product Components

FXRD-3643FAW

FXRD-4343FAW

FXRD-2530FAW

Battery Pack (FXRB-04A)

SCU Multi (FXRP-03A) - Optional

SCU Mini (FXRS-04A) – Optional

Cradle (FXRR-01A) – Optional

Battery Charger (FXRC-04A) – Optional

Wireless Power Transmitter (FXRC-05A) – Optional

Others

2.1 Product Components

2.1.1 Detector

Product Name	Image	Model/Description
VIVIX-S FW Wireless Detector		※ Basic: Battery Pack (2ea) • FXRD-3643FAW (2.6kg) ※ Option: Battery Pack 1ea • FXRD-3643FAW (2.4kg)
		※ Basic: Battery Pack (2ea) • FXRD-4343FAW (3.15kg) ※ Option: Battery Pack (1ea) • FXRD-4343FAW (2.95kg)
		※ Basic: Battery Pack (1ea) • FXRD-2530FAW (1.7kg)

- The design of the decor sheet attached to the detector can be different for each customer.
- The battery pack is removable from the detector. The battery pack can be replaced at the end of its life.
- FXRD-3643FAW and FXRD-4343FAW are equipped with two battery packs, and only one can be installed as an option upon request.
- FXRD-2530FAW can only be equipped with one battery pack.

2.1.2 Battery Pack

Name	Image	Model/Description
Battery Pack (Built-in)		• FXRB-04A ▫ 3,400mAh ▫ 185g

	• **VIVIX-S FW** detectors (FXRD-3643FAW and FXRD-4343FAW) use the same battery packs.

	• When replacing the battery pack, use only the battery pack specified for the **VIVIX-S FW** detector.

2.1.3 SCU (System Control Unit) - Optional

Item	Image	Description
SCU Multi (Option)		• FXRP-03A (330g)
		• AC-DC Adaptor ▫ BPM030S24F10 / DC 24V, Max 1.33A
		• AC Power Cable ▫ 110V (3m, 1EA) / 220V (2m, 1EA)

		• FXRS-04A (1.2kg)
SCU mini (Optional)		• AC-DC adaptor ▫ BPM060S24F10 / DC 24V, Max. 2.7A
		• AC Power Cable ▫ 110V (3m, 1EA) / 220V (2m, 1EA)

	• SCU is not a standard item provided to customers. If necessary, you can purchase SCU as an optional device. • SCU Multi does not support wireless connections. Only use it as a wired connection. • SCU Mini supports both wired and wireless connections. If you only need a wireless connection, you can use a separate external AP or detector AP.

	• When using the SCU for a wired connection, use only the SCU designated for the **VIVIX-S FW** detectors. However, you can use an external AP for wireless connection.

2.1.4 Cradle (Optional)

Item	Image	Description
Cradle package (Optional)		• FXRR-01A (4.05kg)
		• AC-DC Adaptor ▫ ATS200T-P240 / DC 24V / Max 8.3A
		• AC Power Cable ▫ AC 110V (3m, 1EA) / AC 220V (2m, 1EA)

• Cradle is not a standard item provided to customers. If necessary, you can purchase the cradle as an optional device

2.1.5 Battery Charger (Optional)

Item	Image	Description
Battery Charger (Optional)		• FXRC-04A (450g)
		• AC-DC Adaptor ▫ ATS090T-P240 / DC 24V, Max 3.75A

		• AC Power Cable • AC 110V (3m, 1EA) / AC 220V (2m, 1EA)

	• Cradle is not a standard item provided to customers. If necessary, you can purchase the battery charger as an option.

2.1.6 Wireless Power Transmitter (Optional)

Item	Image	Description
Wireless Power Transmitter (Optional)		• FXRC-05A (80g) • DC Power connector cable (10cm) ▫ Input DC 17V, Max 1.41A

	• Wireless power transmitter is not a standard item provided to customers. If necessary, you can purchase it as an option. • Wireless power transmitter should be wired. The available power voltage is DC 17V±10% (DC 15~19V), up to 24W.

	• Make sure to use the wireless power transmitter only specified for **VIVIX-S FW**.

2.1.7 Accessories

Item	Image	Description
AC-DC Adaptor (Option)		• AC-DC Adaptor ▫ BM090S18F02 / DC 18V, Max. 5A
Hardware manual CD		• Detector Operation Manual • Detector Service Manual
Software & Software manual CD (VXvue)	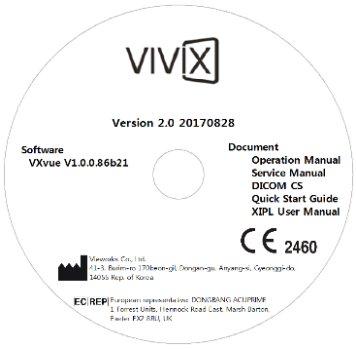	• Software file • Software manual
Cables (Optional)		• VW tether interface cable (8 pin to 8 pin, 7m, magnetic lock)
		• FW tether interface cable • (10 pin to 20 pin, 7m, Magnetic Lock)

		• Generator interface cable (15m)
		• UTP LAN cable (15m, Direct) ▫ CAT5E or more than CAT6
Hook Tether (Optional)		• Hook Tether/ Screw (M2x4ea) • Fixing tether cable
Velcro tape **- 25mm x 50mm (6ea)**		• Attached to the corners of bucky and the friction surface of a detector.
Velcro tape **- 25mm x 100mm (6ea)**		
NFC card		• Changes detector setting by NFC card.

- The AC-DC adaptor and cable are not standard items provided to customers. If necessary, the user can optionally purchase the desired cable according to the intended use.
  - A VW tethered interface cable is required for wired connection to SCU Mini.
  - A FW tethered interface cable is required for wired connection to SCU Multi.
- When using DR Trigger or Passive Trigger interface, the generator interface cable should be located between SCU and the generator system.
- The number of NFC card or design may vary by clients.

⚠	• Use only AC-DC adapters and cables designated for the **VIVIX-S FW** detectors. • The use of accessories and cables other than those approved and sold by Vieworks Co., Ltd. may result in increased release of electromagnetic waves or decreased stability of the equipment. • Accessory equipment connected to the analog and digital interfaces must be certified according to the respective IEC standards. All combinations of equipment must follow **IEC 60601-1** system requirements. • Any person who connects additional equipment to the signal input or signal output ports configures a medical system and is therefore responsible for ensuring that the system complies with the requirements of the system standard **IEC 60601-1**. • Consult your sales distributor or manufacturer if you have any concerns.

2.2 FXRD-3643FAW

2.2.1 Specifications

Item	Specifications
Model	• FXRD-3643FAW
Image Sensor	• Flexible a-Si(Amorphous Silicon) TFT with PIN diode
X-ray Scintillator Type	• CsI
Pixel Pitch	• 0.099㎜ (99㎛)
Field of View	• 36cm x 43cm (14" x 17")
Active Area (H x V)	• 351.252㎜ × 427.284㎜
Active Array	• 3548 x 4316 pixels
Effective Area	• 347.292㎜ x 423.324㎜
Effective Array	• 3508 x 4276 pixels
Grayscale	• 16 bit
Spatial Resolution	• Min. 5.0 lp/㎜
Image Acquisition Time (Wired)	• Up to 4 sec. (Set exposure time to 500ms / except for exposure time)
Image Acquisition Time (Wireless)	• Up to 4 sec. (IEEE802.11ac, MiMO 3x3, 5GHz, 80MHz) (Exposure time is set to 500ms, except for exposure time)
Multi-frame Mode	• Speed Grade A ▫ 6 fps(1x1, PF, Exposure time 50ms, Frame count 60) • Speed Grade B ▫ 3.5 fps(1x1, PF, Exposure time 50ms, Frame count 60) • Supported Binning 2x2 • Max. Frame rate depens on the exposure time or binning or AOI
Cycle Time	• Min. 5 sec. (with optimal wired / wireless environment, exposure time is set to 500ms, excluding software processing time)
X-ray Synchronous Control	• AED (Auto Exposure Detection) • DR Trigger (External line trigger) • Passive Trigger (External line trigger) • Software Trigger
Power Supply	• Powered from SCU via tether interface cable: DC 24V, Max. 1.0A • Powered via AC-DC adapter: DC 18V, Max. 4.44A • Powered via cradle: DC 24V, Max. 3.33A • Powered via wireless power transmitter: DC 12V, Max. 1.25A • Powered via 2 battery packs: DC 9 ~13.2V, Max. 78.54Wh
Power Consumption	• Max. 24W (without battery charged) • Max. 80W (when charging battery)
Operating Time (Early life of battery)	• One battery pack ▫ 7.5 hours (image acquired every 100 seconds) ▫ 8 hours (standby) • Two battery packs ▫ 15 hours (image acquired every 100 seconds), ▫ 16 hours (standby)
Dimensions (H × W × D)	• 460.0㎜ × 460.0㎜ × 15.0㎜

Weight	• One battery pack : 2.4kg • Two battery packs : 2.6kg
Image Transmission	• Wired: Gigabit Ethernet (1000BASE-T) via Power over Ethernet (PoE) • Wireless: IEEE 802.11n / ac (2.4GHz / 5GHz), 3 antennas
Data Transmission Speed (Wired)	• Max. 1Gbps
Data Transmission Speed (Wireless)	• Max. 300Mbps (IEEE802.11n, MIMO 2x2, 5GHz, 40MHz) • Max. 1300Mbps (IEEE802.11ac, MIMO 3x3, 5GHz, 80MHz)

- Battery packs lose capacity as they age. This may reduce the operating time of the detector.

2.2.2 Functions

Side

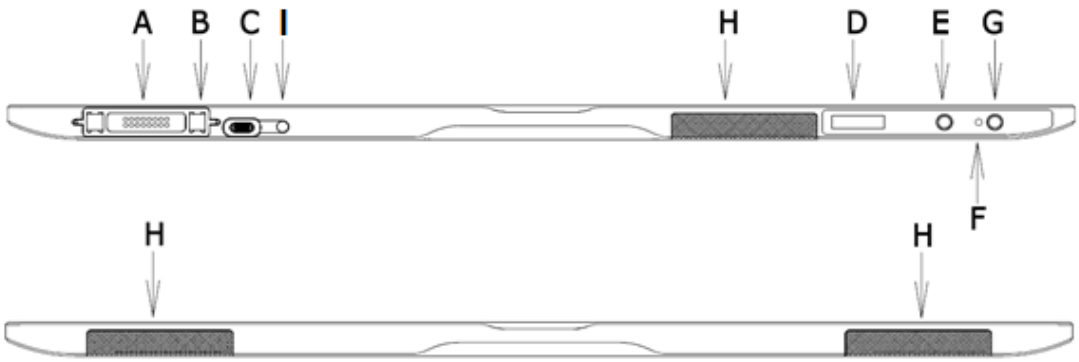

	Name	Description
A	**Tether Interface Connector**	• Tether interface cable connector. ▫ Used for wired connection between a detector and SCU. • Connector for a cradle ▫ Used for battery charging through a cradle
B	**Fixing magnet for tethered interface**	• Used for fixing a tether interface cable
C	**AC-DC Adapter Connector**	• Connector for fastening the AC-DC adapter • Used for fast battery charging
D	**OLED Display**	• Displays battery status • Displays wired / wireless connection status • Displays sleep mode status
E	**AP Button**	• Changes AP settings button in wireless communication (Change detector AP / STAION or change preset in STATION mode) • Changes OLED screen
F	**Power Indicator LED**	• Displays system power status • Displays system boot status

G	**Power Button**	• System power on/off • Changes OLED screen
H	**Antenna for Wireless LAN**	• Antennas for wireless communication (3ea)
I	**Charge Status LED**	• Displays the charge status of the battery

Rear

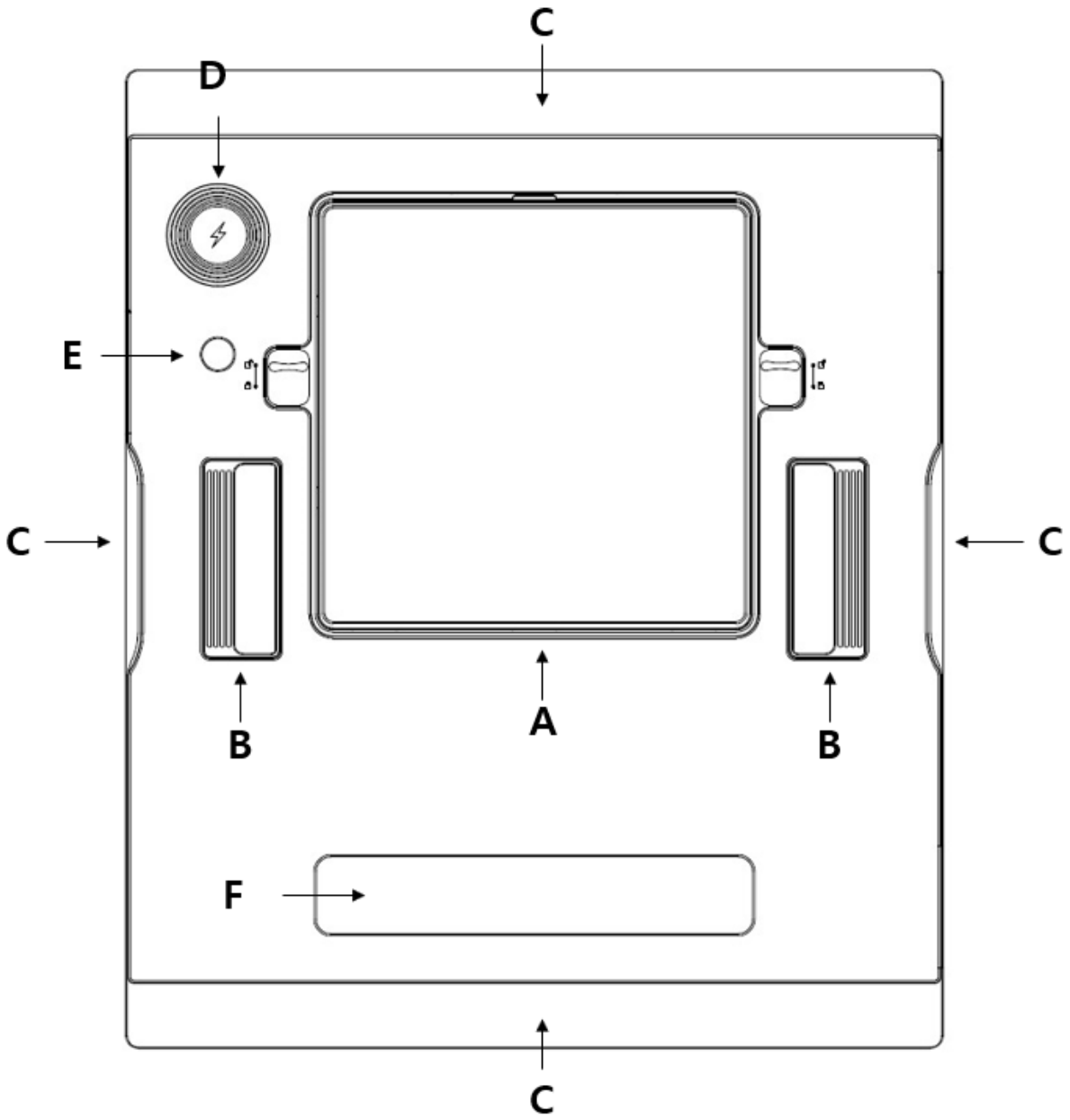

	Name	Description
A	**Battery Pack Cover**	The cover needs to be opened and closed when replacing the battery pack.
B	**Handle**	A handle for carrying a detector
C	**Lift Structure**	Used when the detector is placed on flat surface

D	**Wireless Power Receiver and NFC antenna**	The part exposed to wireless power transmitter or NFC card
E	**Infrared LED**	Infrared transmitter that controls wireless power ON/OFF from detector
F	**Label Attachment**	Label attaching part

2.2.3 Deco Sheet

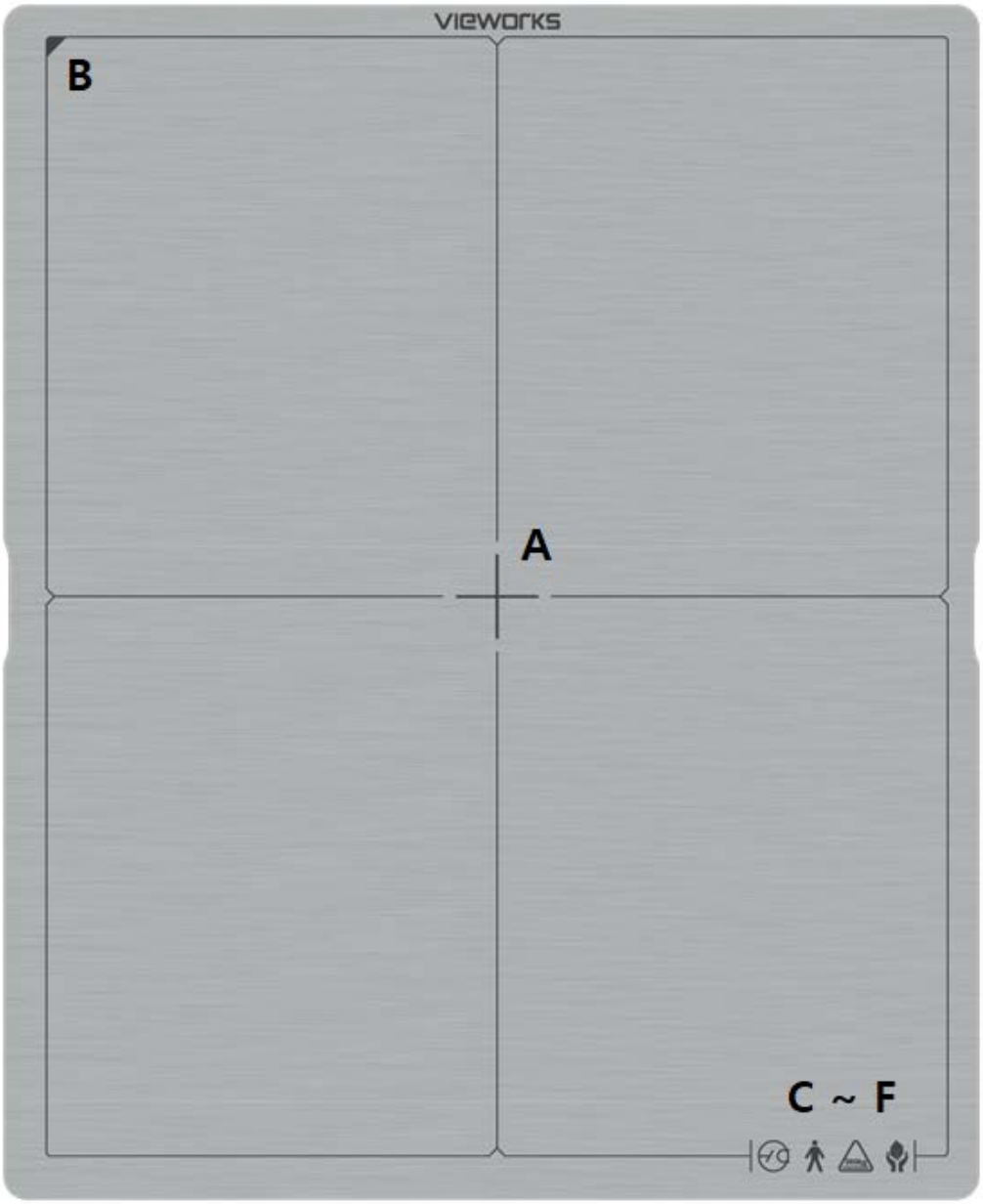

	Indication Info.	Description
A	**Center of the detector**	Indicates the central position of detector.
B	**Image starting point**	Indicates the starting point of an original image.
C~F	**Product safety and performance logos**	Notices regarding product safety and performance

- Image starting point (0.0) of this detector is located nearby the tether interface connector. You can change the displayed direction of an image from the **VIVIX Setup** program, but it does not mean that the starting point and direction of the original image are changed.

2.2.4 Wireless Communication

Item	Specifications
Wireless standard	WPT(Passive), NFC, IEEE 802.11n/acIEEE 802.11n/ac
Frequency range	[CE] 2.412 ~ 2.472 GHz (13 Channels) 5.18 ~ 5.24 GHz (4 Channels) [FCC] 2.412 ~ 2.462 GHz (11 Channels) 5.18 ~ 5.24 GHz (4 Channels) 5.745 ~ 5.805 GHz (4 Channels)
Data transmission rate	Max. 300Mbps (IEEE802.11n, MIMO 2x2, 5GHz, 40MHz) Max. 1300Mbps (IEEE802.11ac, MIMO 3x3, 5GHz, 80MHz)
Modulation	BPSK, QPSK, 16-QAM, 64-QAM, 256-QAM
Transmission power	[CE] 2.4㎓: Max. 14.5 ~~19~~dBm ~~(per chain)~~ 5㎓: Max. 15 ~~8~~dBm ~~(per chain)~~ [FCC] 2.4㎓: Max. 20 dBm 5㎓: Max. 20.5 dBm
Security	WPA2-PSK
Antenna	Dual Band Antennas (3EA, built-in)

- The wireless communication specifications of the **VIVIX-S FW** detectors (FXRD-3643FAW, FXRD-4343FAW, and FXRD-2530FAW) are the same.

2.2.5 Use Environment

Item	Operation	Storage & Transportation
Temperature	0 ~ +40℃	-15 ~ +55℃
Humidity	5 ~ 90% (Non-condensing)	5 ~ 90% (Non-condensing)
Atmospheric pressure	700 ~ 1060 hPa	500 ~ 1060 hPa
Shock	20G	30G
Vibration	2G	5G
Drop Limit	1,500㎜ (FXRD-3643FAW/2530FAW) 1,200㎜ (FXRD-4343FAW)	1,500㎜ (FXRD-3643FAW/2530FAW) 1,200㎜ (FXRD-4343FAW)

	• The operating environment specifications of **VIVIX-S FW** detectors (FXRD-3643FAW, FXRD-4343FAW, and FXRD-2530FAW) are the same.

	• When you charge the product quickly (with AC-DC adapter), it is strongly recommended to use it in the environment of 15 ~ 35 ℃. When using the product in the environment of 0 ~ 15 ℃, the battery capacity may decrease and its life may be shortened. • Be sure to handle the product within the operating environment. Otherwise, malfunction or electric shock may occur.

2.2.6 Load Limit of Detector

Uniform load	Local load
Over the whole surface	Center diameter 40 ㎜
Max. 400 kg	Max. 200 kg
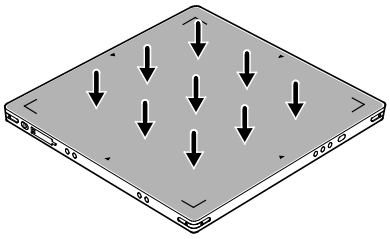	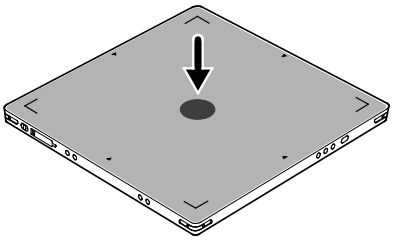

- Do not let the patient or object heavier than load limit be on the detector. Then, detector can be damaged.
- Do not allow the patient to stand completely on the detector or lay down on it. Even weights within the load limits can seriously affect internal components such as sensors.

- The load limit specifications for **VIVIX-S FW** detectors (FXRD-3643FAW, FXRD-4343FAW, and FXRD-2530FAW) are the same.

2.3 FXRD-4343FAW

2.3.1 Specifications

Item	Specifications
Model	• FXRD-4343FAW
Image Sensor	• Flexible a-Si (Amorphous Silicon) TFT with PIN diode
X-ray Scintillator Type	• CsI
Pixel Pitch	• 0.099㎜ (99㎛)
Field of View	• 43cm x 43cm (17" x 17")
Active Area (H x V)	• 427.284㎜ × 427.284㎜
Active Array	• 4316 x 4316 pixels
Effective Area	• 423.324㎜ x 423.324㎜
Effective Array	• 4276 x 4276 pixels
Grayscale	• 16bit
Spatial Resolution	• Min. 5.0 lp/㎜
Image Acquisition Time (Wired)	• Up to 4 sec. (Set exposure time to 500ms / except for exposure time)
Image Acquisition Time (Wireless)	• Up to 4 sec. (IEEE802.11ac, MiMO 3x3, 5GHz, 80MHz) (Exposure time is set to 500ms, except for exposure time)
Multi-frame Mode	• Speed Grade A ▫ 6 fps(1x1, PF, Exposure time 50ms, Frame count 60) • Speed Grade B ▫ 3.5 fps(1x1, PF, Exposure time 50ms, Frame count 60) • Supported Binning 2x2 • Max. Frame rate depens on the exposure time or binning or AOI
Cycle Time	• Min. 5 sec. (with optimal wired / wireless environment, exposure time is set to 500ms, excluding software processing time)
X-ray Synchronous Control	• AED (Auto Exposure Detection) • DR Trigger (External line trigger) • Passive Trigger (External line trigger) • Software Trigger
Power Supply	• Powered from SCU via tether interface cable: DC 24V, Max. 1.0A • Powered via AC-DC adapter: DC 18V, Max. 4.44A • Powered via cradle: DC 24V, Max. 3.33A • Powered via wireless power transmitter: DC 12V, Max. 1.25A • Powered via 2 battery packs: DC 9 ~13.2V, Max. 78.54Wh
Power Consumption	• Max. 24W (without battery charged) • Max. 80W (when charging battery)
Operating Time (Early life of battery)	• One battery pack ▫ 7.5 hours (image acquired every 100 seconds) ▫ 8 hours (standby) • Two battery packs ▫ 15 hours (image acquired every 100 seconds) ▫ 16 hours (standby)
Dimensions (H × W × D)	• 460.0㎜ × 460.0㎜ × 15.0㎜

Weight	• With a battery pack: 2.95kg • With two battery packs: 3.15kg
Image Transmission	• Wired: Gigabit Ethernet (1000BASE-T) via Power over Ethernet (PoE) • Wireless: IEEE 802.11n / ac (2.4GHz / 5GHz), 3 antennas
Data Transmission Speed (Wired)	• Max. 1Gbps
Data Transmission Speed (Wireless)	• Max. 450Mbps (IEEE802.11n, MIMO 2x2, 5GHz, 40MHz) • Max. 1300Mbps (IEEE802.11ac, MIMO 3x3, 5GHz, 80MHz)

- Battery packs lose capacity as they age. This may reduce the operating time of the detector.

2.3.2 Functions

Side

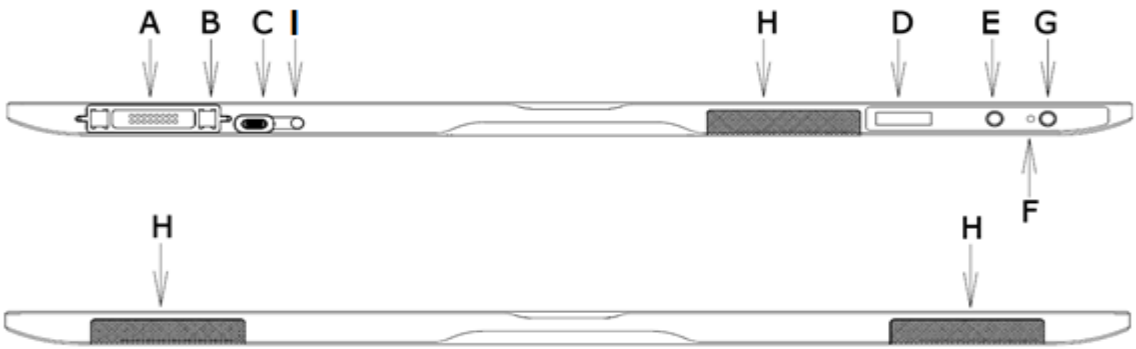

	Name	Description
A	**Tether Interface Connector**	• Tether interface cable connector ▫ Used for wired connection between a detector and SCU • Connector for a cradle ▫ Used for battery charging through a cradle
B	**Fixing magnet for tethered interface**	• Used for fixing a tether interface cable
C	**AC-DC Adapter Connector**	• Connector for fastening the AC-DC adapter • Used for fast battery charging
D	**OLED Display**	• Displays battery status • Displays wired / wireless connection status • Displays sleep mode status
E	**AP Button**	• Changes AP settings button in wireless communication (Change detector AP / STAION or change preset in STATION mode) • Changes OLED screen
F	**Power Indicator LED**	• Displays system power status • Displays system boot status

G	**Power Button**	• System power on/off • Changes OLED screen
H	**Antenna for Wireless LAN**	• Antennas for wireless communication (3ea)
I	**Charge Status LED**	• Displays the charge status of the battery

Rear

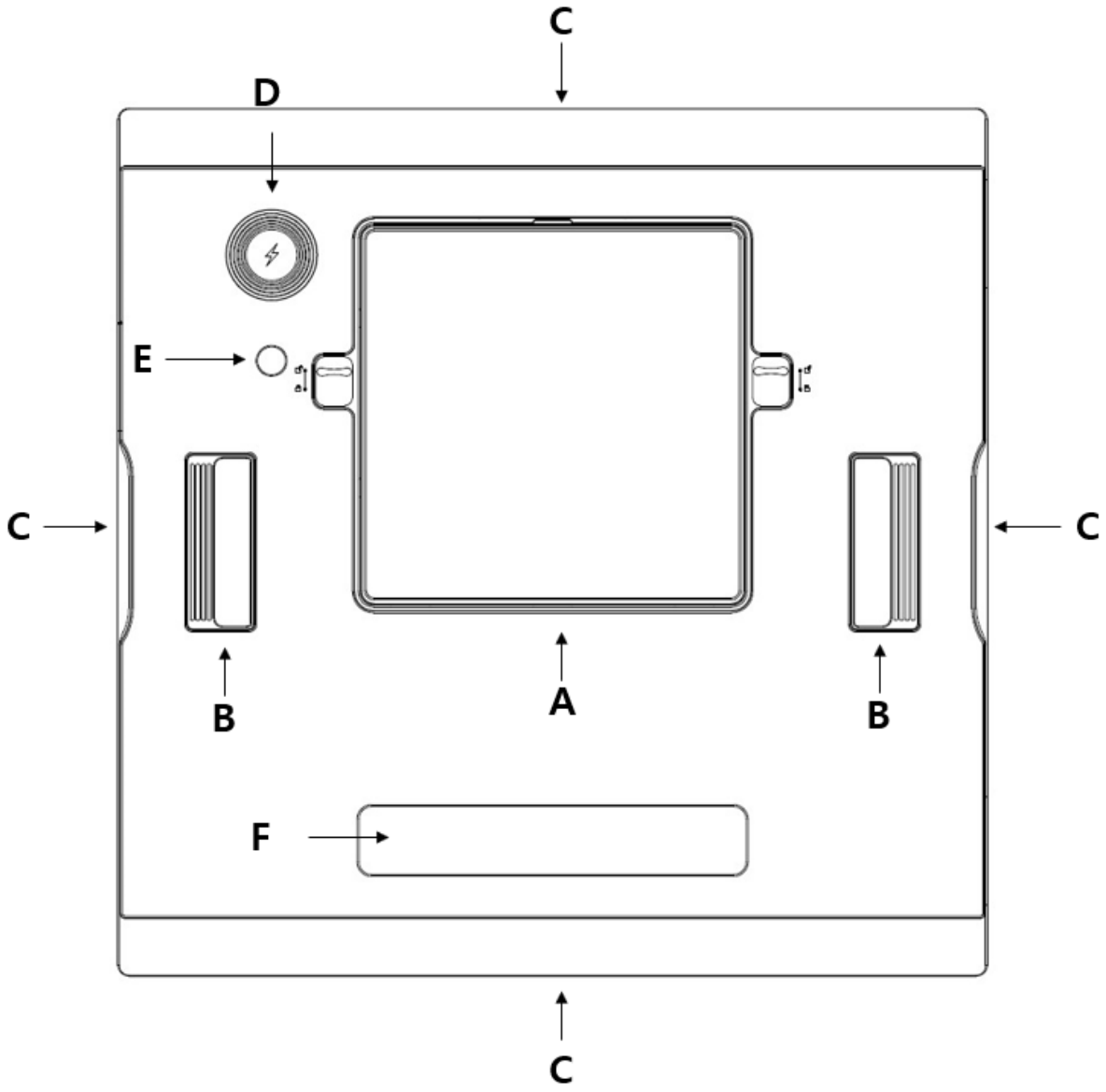

	Name	Description
A	**Battery Pack Cover**	The cover needs to be opened and closed when replacing the battery pack.
B	**Handle**	A handle for carrying a detector
C	**Lift Structure**	Used when the detector is placed on flat surface
D	**Wireless Power Receiver and NFC antenna**	The part exposed to wireless power transmitter or NFC card
E	**Infrared LED**	Infrared transmitter that controls wireless power ON/OFF from detector
F	**Label Attachment**	Label attaching part

2.3.3 Deco Sheet

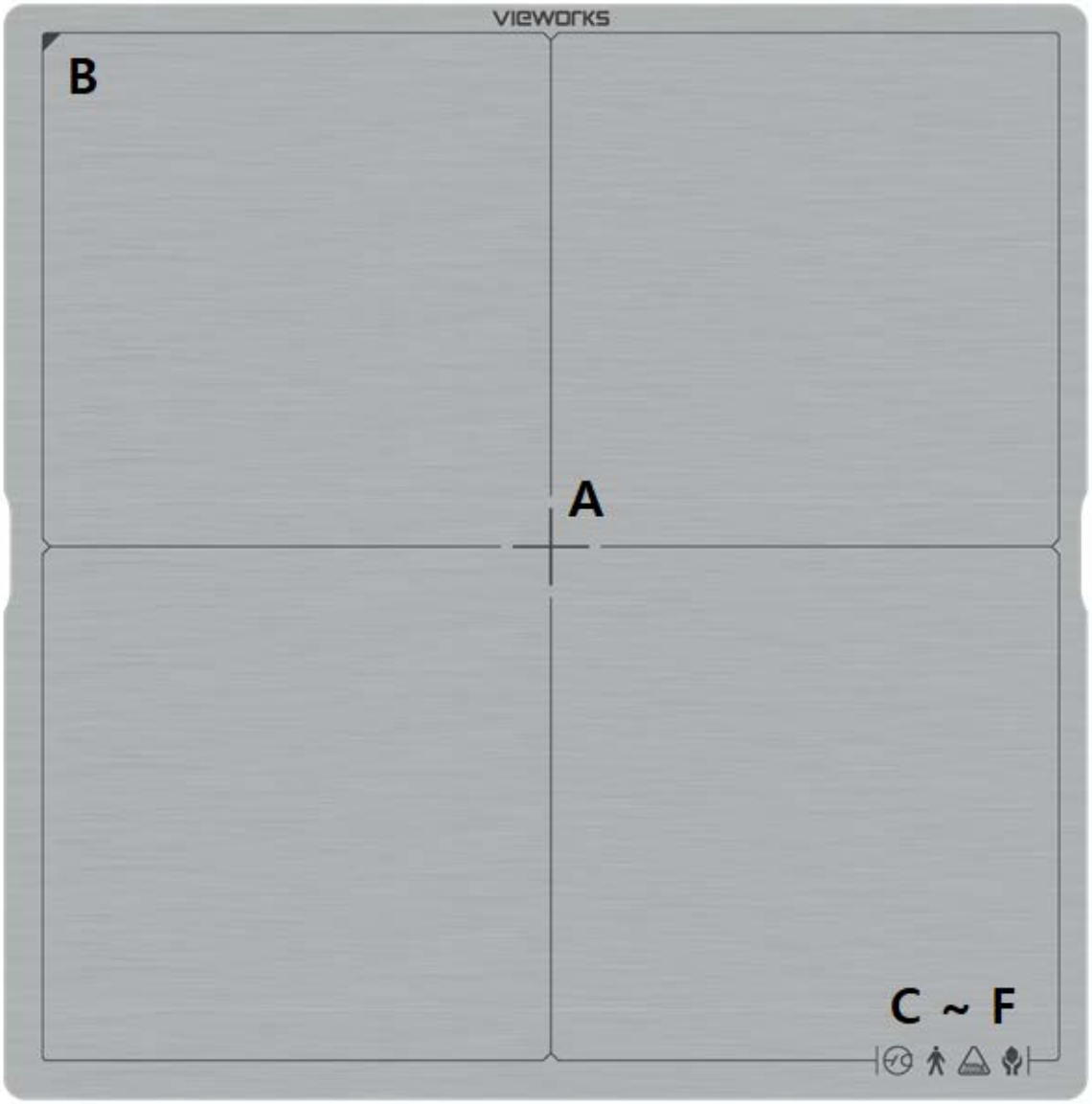

	Indication Info.	Description
A	**Center of the detector**	Indicates the central position of detector.
B	**Image starting point**	Indicates the starting point of an original image.
C~F	**Logos relating to product safety and performance**	Notices regarding product safety and performance

- Image starting point (0.0) of this detector is located nearby the tether interface connector. You can change the displayed direction of an image from the **VIVIX Setup** program, but it does not mean that the starting point and direction of the original image are changed.

2.4 FXRD-2530FAW

2.4.1 Specifications

Item	Specifications
Model	• FXRD-2530FAW
Image Sensor	• Flexible a-Si (Amorphous Silicon) TFT with PIN diode
X-ray Scintillator Type	• CsI
Pixel Pitch	• 0.099㎜ (99㎛)
Field of View	• 25cm x 30cm (10″ x 12″)
Active Area (H x V)	• 249.876㎜ × 300.564㎜
Active Array	• 2524 x 3036 pixels
Effective Area	• 245.916㎜ x 296.604㎜
Effective Array	• 2484 x 2996 pixels
Grayscale	• 16 bit
Spatial Resolution	• Min. 5.0 lp/㎜
Image Acquisition Time (Wired)	• Up to 3 sec. (Set exposure time to 500ms / except exposure time)
Image Acquisition Time (Wireless)	• Up to 3 sec. (IEEE802.11ac, MiMO 3x3, 5GHz, 80MHz) (Exposure time is set to 500ms, except exposure time)
Multi-frame Mode	• Unsupported
Cycle Time	• Min. 4 sec. (with optimal wired / wireless environment, exposure time is set to 500ms, excluding software processing time)
X-ray Synchronous Control	• AED (Auto Exposure Detection) • DR Trigger (External line trigger) • Passive Trigger (External line trigger) • Software Trigger
Power Supply	• Powered from SCU via tether interface cable: DC 24V, Max. 0.625A • Powered via AC-DC adaptor: DC 18V, Max. 2.78A • Powered via cradle: DC 24V, Max. 2.08A • Powered via wireless power transmitter: DC 12V, Max. 1.25A • Powered via a battery pack: DC 9 ~13.2V, Max. 39.27Wh
Power Consumption	• Max. 15W (without battery charged), Max. 50W (with battery charged)
Operating Time (Early life of battery)	• 7.5 hours (image acquired every 100 seconds) • 8 hours (standby)
Dimensions (H × W × D)	• 282.5㎜ × 333.3㎜ × 15.0㎜
Weight	• 1.7kg
Image Transmission	• Wired: Gigabit Ethernet (1000BASE-T) via Power over Ethernet (PoE) • Wireless: IEEE 802.11n / ac (2.4GHz / 5GHz), 3 antennas
Data Transmission Speed (Wired)	• Max. 1Gbps
Data Transmission Speed (Wireless)	• Max. 450Mbps (IEEE802.11n, MIMO 3x3, 5GHz, 40MHz) • Max. 1300Mbps (IEEE802.11ac, MIMO 3x3, 5GHz, 80MHz)

- Battery packs lose capacity as they age. This may reduce the operating time of the detector.

2.4.2 Functions

Side

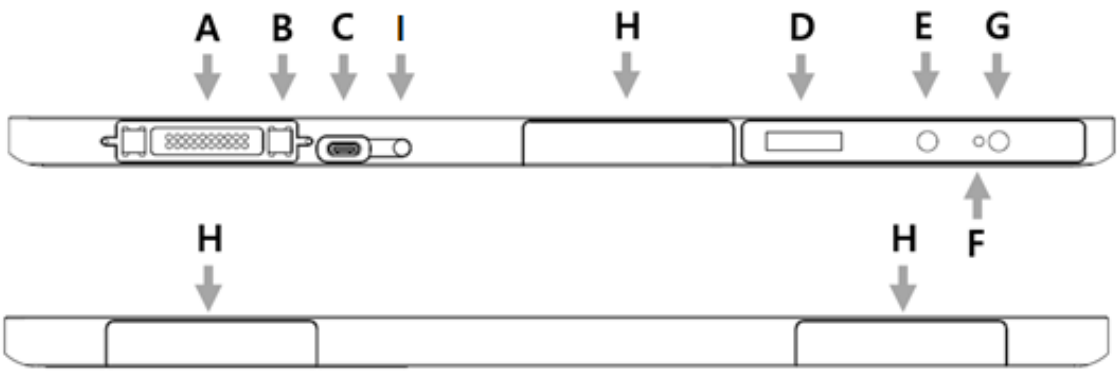

	Name	Description
A	**Tether Interface Connector**	• Tether interface cable connector ▫ Used for wired connection between a detector and SCU • Connector for a cradle ▫ Used for battery charging through a cradle
B	**Fixing magnet for tethered interface**	• Used for fixing a tether interface cable
C	**AC-DC Adapter Connector**	• Connector for fastening the AC-DC adapter • Used for fast battery charging
D	**OLED Display**	• Displays battery status • Displays wired / wireless connection status • Displays sleep mode status
E	**AP Button**	• Changes AP settings button in wireless communication (Change detector AP / STAION or change preset in STATION mode) • Changes OLED screen
F	**Power Indicator LED**	• Displays system power status • Displays system boot status
G	**Power Button**	• System power on/off • Changes OLED screen
H	**Antenna for Wireless LAN**	• Antennas for wireless communication (3ea)
I	**Charge State LED**	• Displays the charge state of the battery

Rear

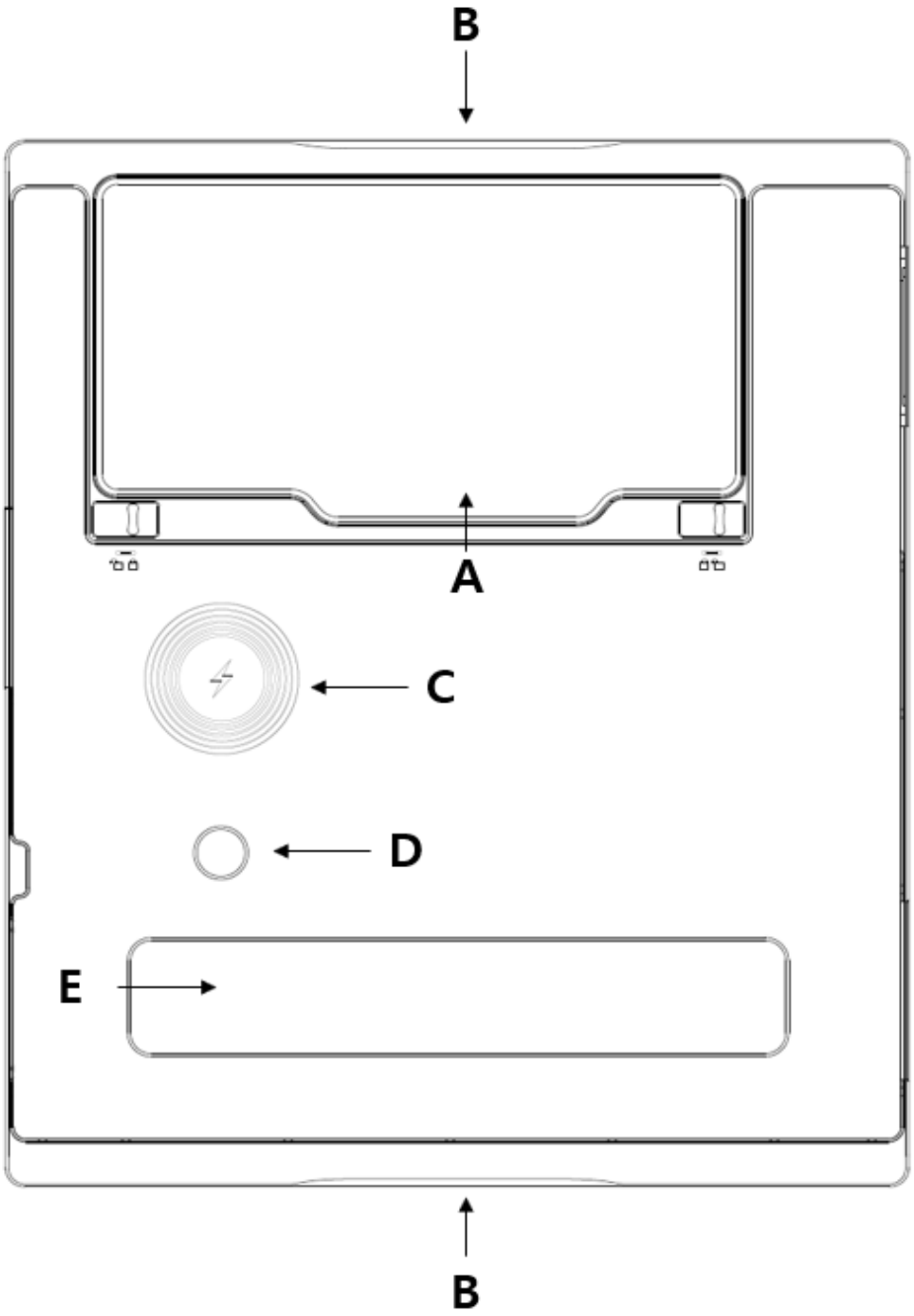

	Name	Description
A	**Battery Pack Cover**	The cover needs to be opened and closed when replacing the battery pack.
B	**Lift Structure**	Used when the detector is placed on flat surface
C	**Wireless Power Receiver and NFC antenna**	The part exposed to wireless power transmitter or NFC card
D	**Infrared LED**	Infrared transmitter that controls wireless power ON/OFF from detector
E	**Label Attachment**	Label attaching part

2.4.3 Deco Sheet

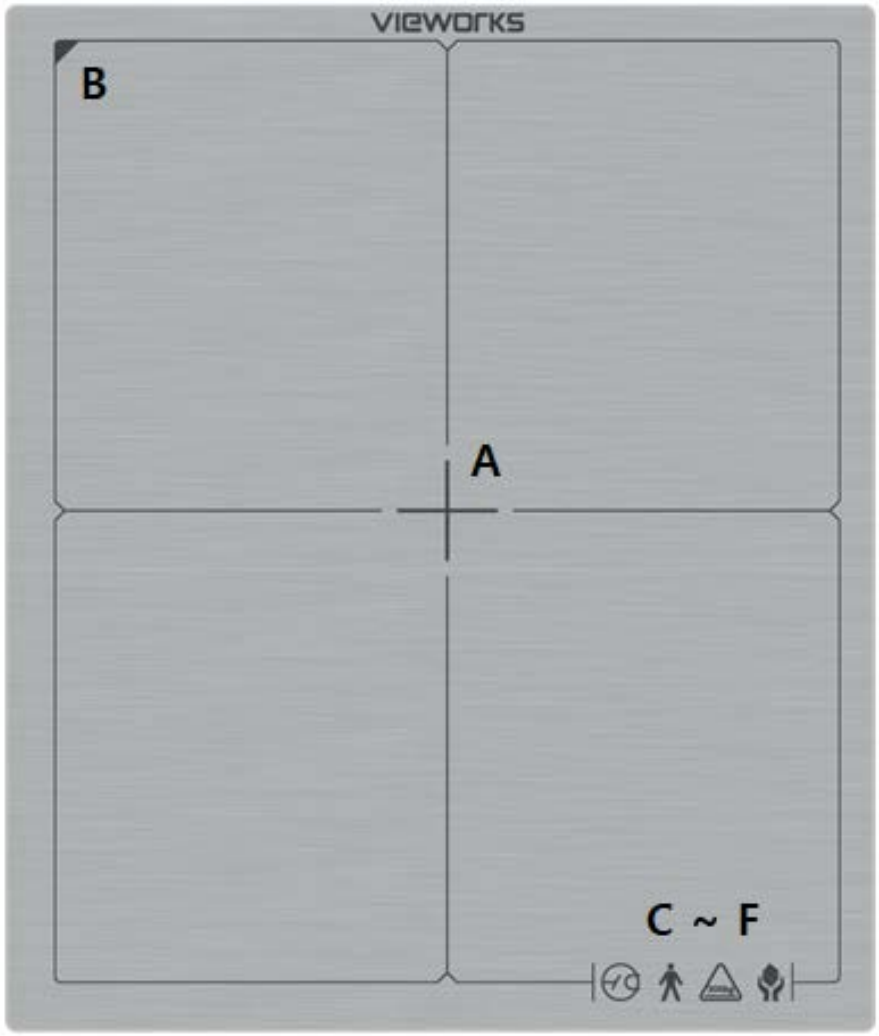

	Indication Info.	Description
A	**Center of the detector**	Indicates the central position of detector.
B	**Image starting point**	Indicates the starting point of an original image.
C~F	**Logos relating to product safety and performance**	Notices regarding product safety and performance

- Image starting point (0.0) of this detector is located nearby the tether interface connector. You can change the displayed direction of an image from the **VIVIX Setup** program, but it does not mean that the starting point and direction of the original image are changed.

2.5 Battery Pack (FXRB-04A)

2.5.1 Specifications

Item	Specifications
Model	FXRB-04A
Type	Lithium Ion Polymer
Nominal Voltage	DC +11.55V
Nominal Capacity	3,400mAh
Number of Cells	3S1P (3 Series 1 Parallel)
Battery Life	Approx. 800 times (One time standard: Fully charged and then fully discharged)
Dimensions (H × W × D)	189.0㎜ × 89.0㎜ × 6.65㎜ (max.)
Weight	185g (max.)

- Battery packs lose capacity over time.
  - You can replace the battery pack at the end of its life.
- The life of a battery pack is the number of charge and discharge cycles until it reaches 80% or less of its initial capacity (nominal capacity).

2.6 SCU Multi (FXRP-03A) - Optional

SCU Multi is a device that transmits images by wired connection between the detector and workstation. You can wire it to the X-ray generator on all modes(Radio mode, PF mode, and CF mode) to use it as DR Trigger or Passive Trigger interfaces.

2.6.1 Specifications

Item	Specifications
Model	• FXRP-03A
Power Supply	• Input: DC +24V Max.1.0A
Cable Connection Port	• Gigabit Ethernet port (1ea) • PoE (Power over Ethernet) Port (1ea) • X-Ray Generator Interface Port (1ea)
Dimensions (H × W × D)	• 113㎜ × 109㎜ × 29.5㎜
Weight	• 330g

2.6.2 Drawings

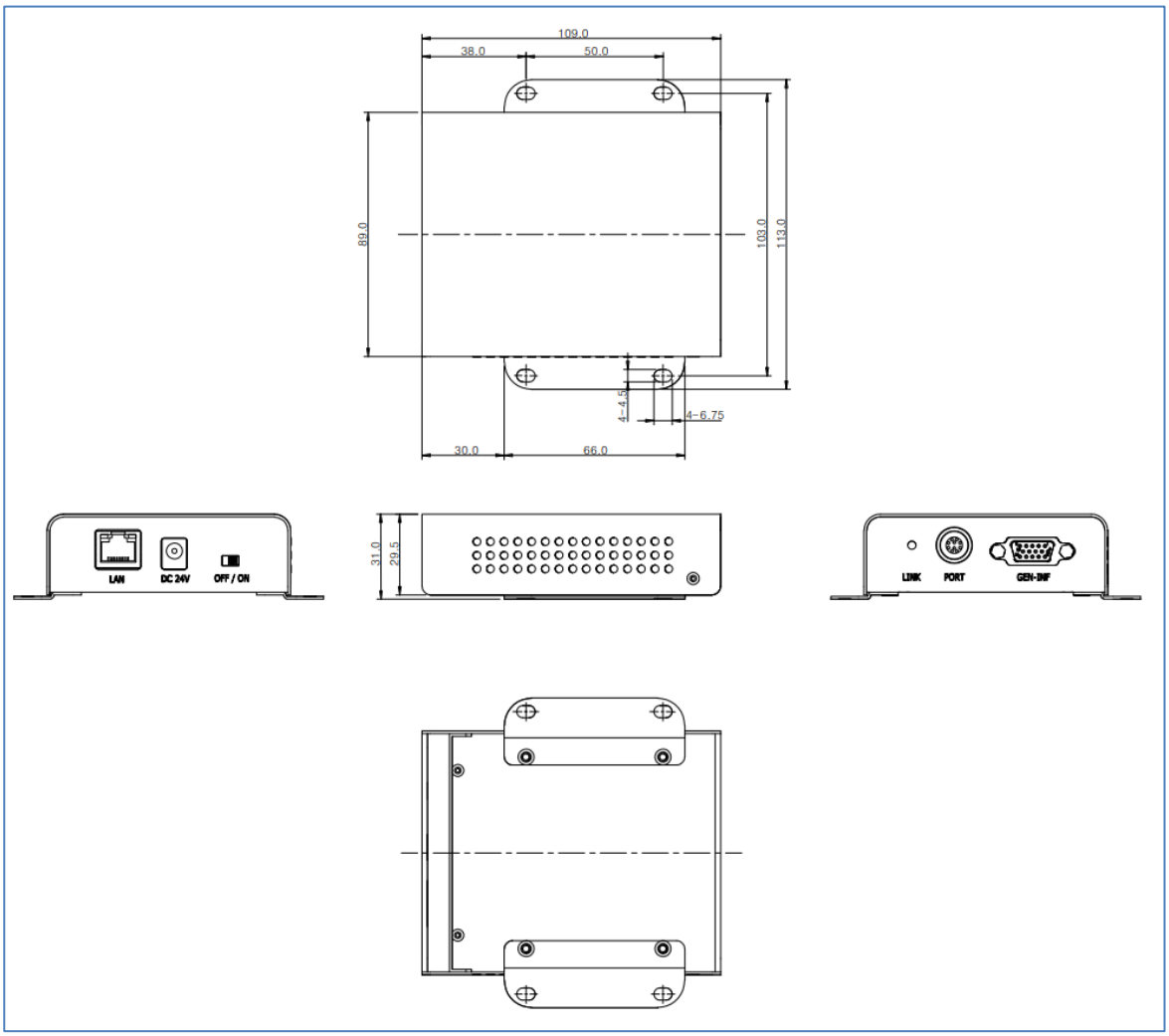

2.6.3 Functions

Front Side

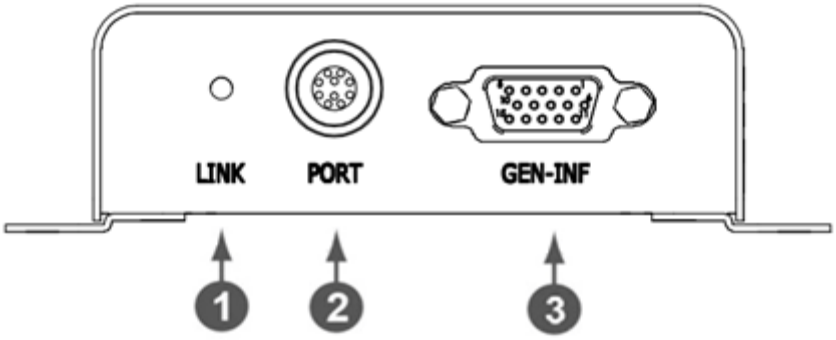

No.	Name	Description
1	**LINK LED**	Indicates the state of **PoE** port. • Green : 1 Gbps • Yellow : 100 Mbps
2	**PoE Port**	**PoE** (Power over Ethernet) port (1000BASE-T) • Communication between the detector and SCU Multi. • Supplies power to the detector. • Interface between detector and X-ray generator.
3	**EXT_INF**	X-ray generator interface connector (D-SUB 15pin, Female)

Rear Side

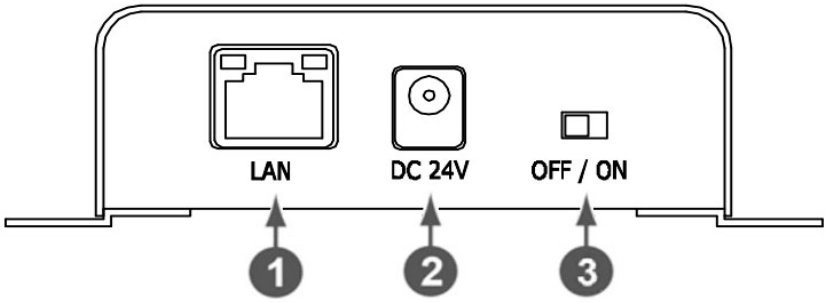

No.	Name	Description
1	**LAN port**	Gigabit Ethernet port (1000BASE-T) • Communication between the workstation and SCU Multi.
2	**DC power input port**	DC +24V • Supplies power to SCU Lite.
3	**Power Switch**	Turns on/off the power of SCU Lite.

2.7 SCU mini (FXRS-04A) – Optional

The SCU mini is located between the detector, the workstation and the X-ray generator to synchronize images and signals. The SCU mini has a wired or wireless connection to the detector and a wired connection to the workstation. You can also wire it to the X-ray generator on Radio mode to use it as Dr Trigger interface. However, Passive Trigger interface is unavailable in this case. Only AED interface is available on Multi-frame mode, including PF mode and CF mode.

2.7.1 Specifications

Item	Specifications
Model	FXRS-04A
Power Supply	Input: DC +24V, Max. 2A.
Cable Connection Port	• Gigabit Ethernet port (3ea) • PoE (Power over Ethernet) Port (1ea) • X-ray Generator Interface Port (1ea)
Wireless Communication	IEEE 802.11n (2.4 ㎓ / 5 ㎓)
Dimension (H × W × D)	210.0㎜ × 170.0㎜ × 45.0㎜
Antenna	140㎜ (2ea, dual band)
Weight	1.2kg

2.7.2 Drawings

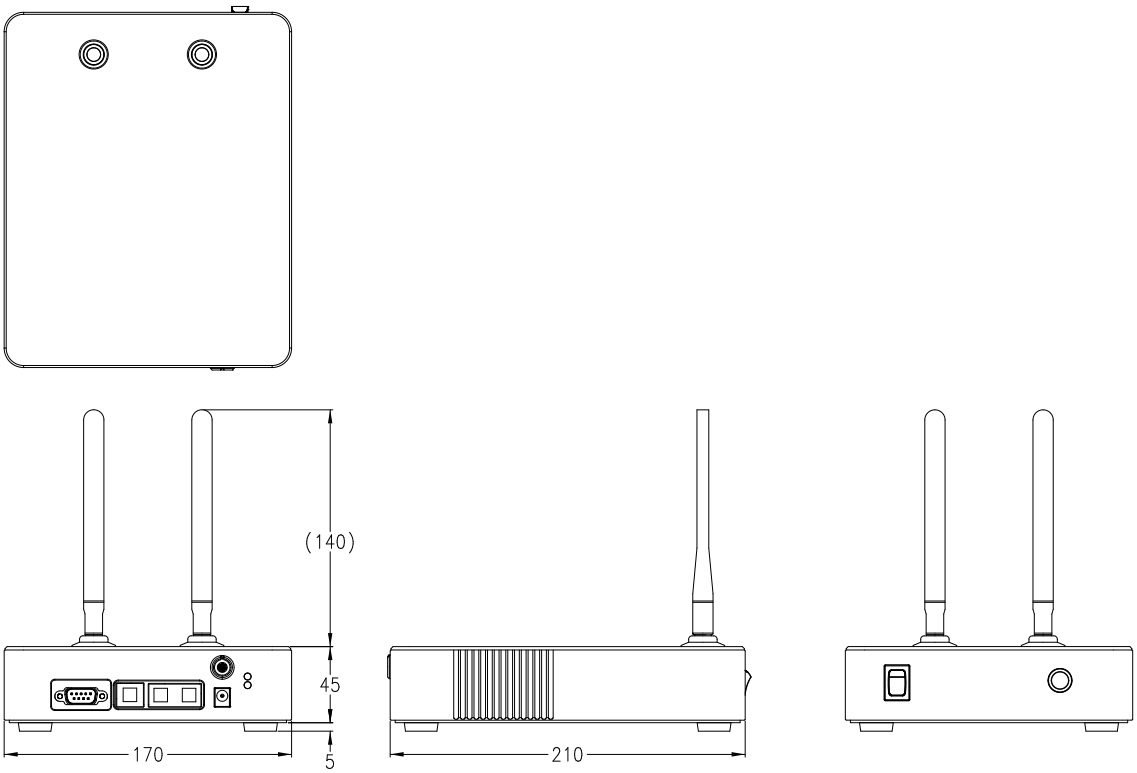

2.7.3 Functions

Front Side

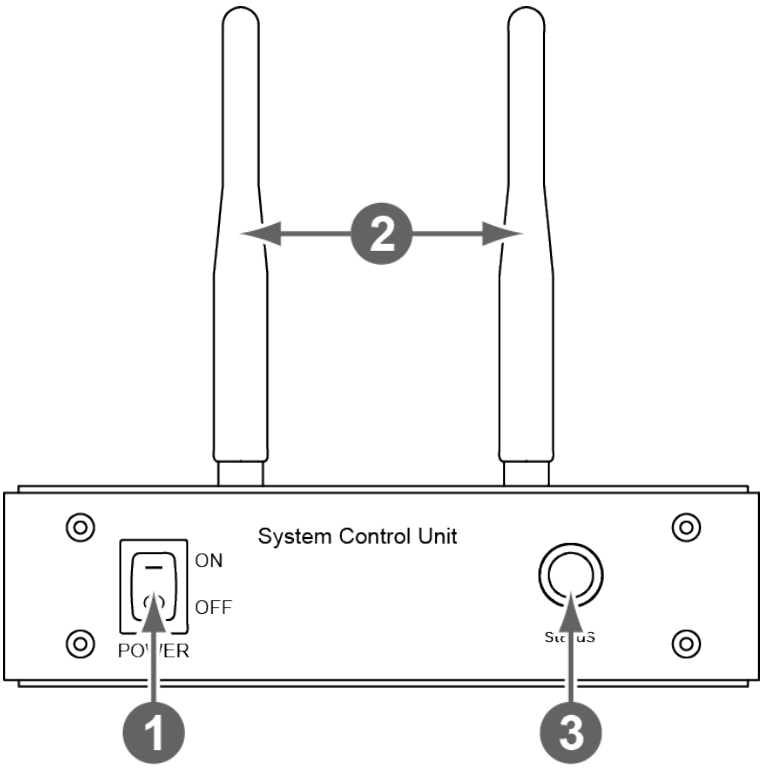

No.	Name	Description
1	**Power switch**	Power switch of SCU mini. (ON / OFF)
2	**Antenna**	Assists communications between the detector and SCU mini.
3	**Status LED**	Indicates status of SCU mini operation and connection. • Blinking green: Booting • Green: Completed to boot up • Blue: The detector is connected and ready to communicate.

Rear Side

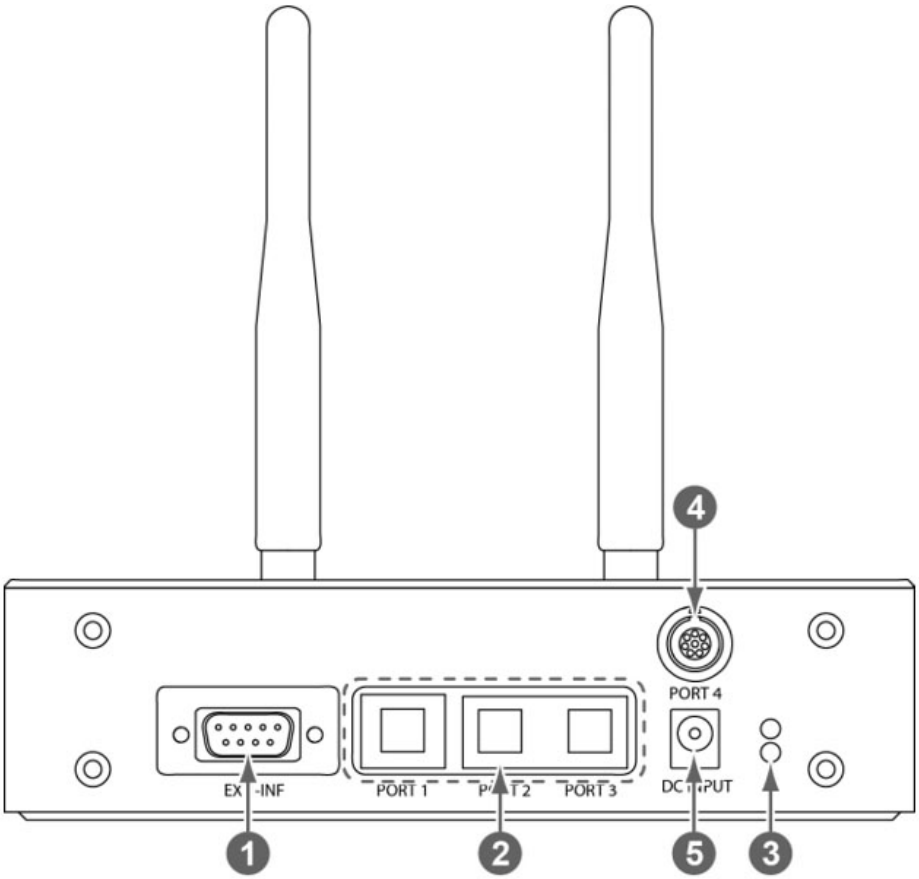

No.	Name	Description
1	**EXT_INF**	X-ray generator interface connector (D-SUB 15pin, Female)
2	**LAN port (Port 1, 2, 3)**	Gigabit Ethernet port (1000BASE-T) • **Port 1**: Communication between the workstation and SCU mini. • **Port 2, 3**: For configuring multiple detectors.
3	**PoE status lamp**	Indicates the status of **PoE** port. • Green: 1 Gbps • Orange: 100 Mbps
4	**PoE port**	**PoE** (Power over Ethernet) port (1000BASE-T) • Communication between the detector and SCU mini. • Supplies power to the detector.
5	**DC power input port**	DC +24V • Supplies power to SCU mini.

2.8 Cradle (FXRR-01A) – Optional

By attaching a detector to the cradle, you can conveniently charge the battery inserted in the detector. You can charge the battery after equipping the battery charger in the cradle.

2.8.1 Specifications

Item	Specifications
Model	FXRR-01A
Power Supply	Input: DC +24V, Max. 6.66A
Dimension (H × W × D)	410.0㎜ × 168.0㎜ × 159.0㎜
Slot	A, B (2 ea)
Weight	4.04kg

2.8.2 Drawings

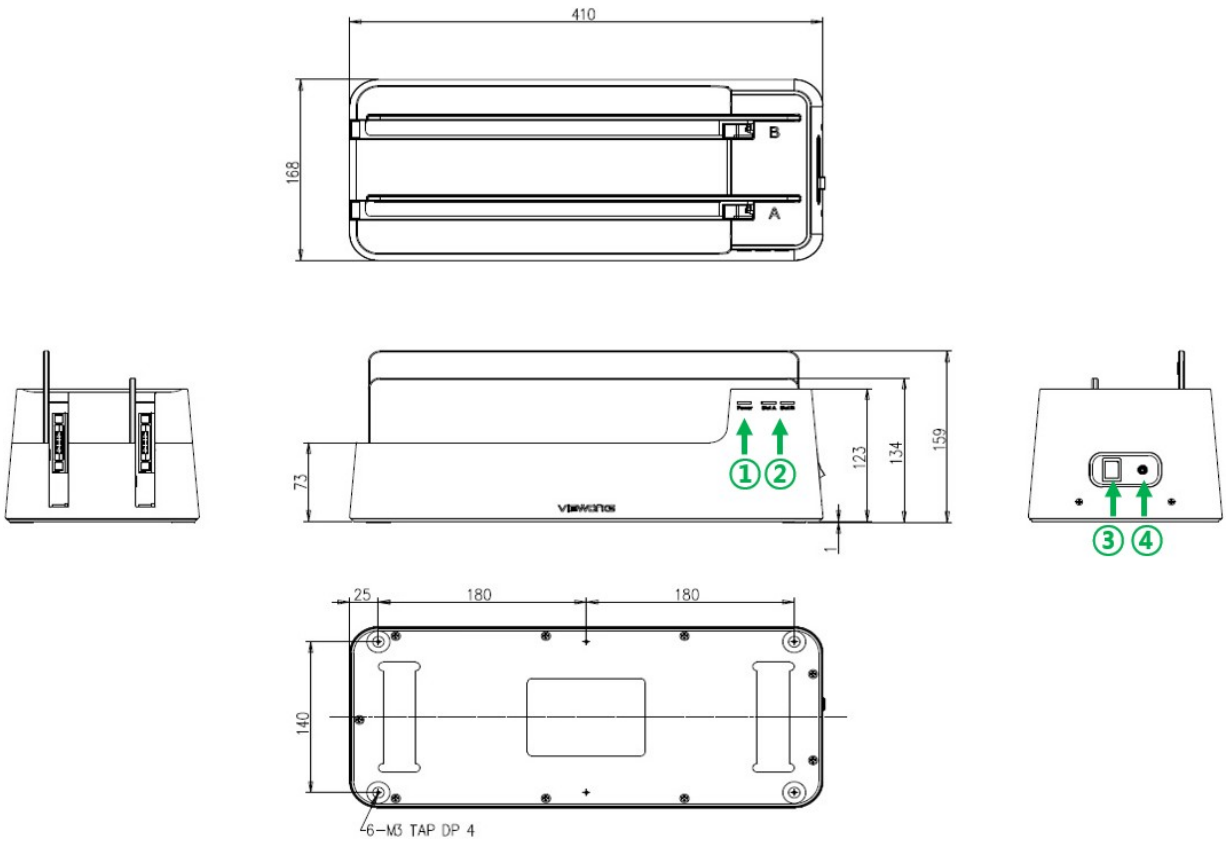

2.8.3 Functions

Front

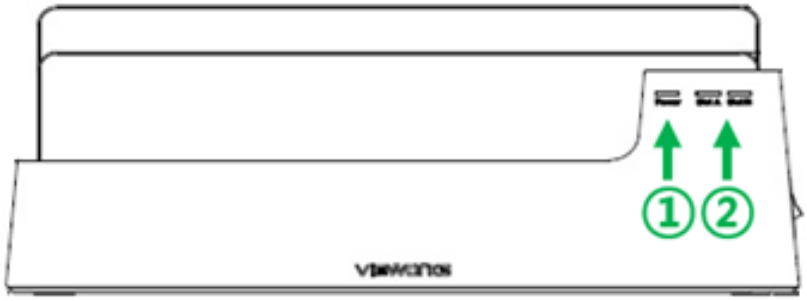

No.	Name	Description
1	**Power LED**	Displays a power status of the cradle • The LED in green is off: Powered off • The LED in green is on: Powered on
2	**Charging Status LED**	Displays a charge state of the detector and battery charger equipped with Slot (A/B) • LED in orange: the detector is being charged • LED in green: the detector is fully charged

Side (Left/Right)

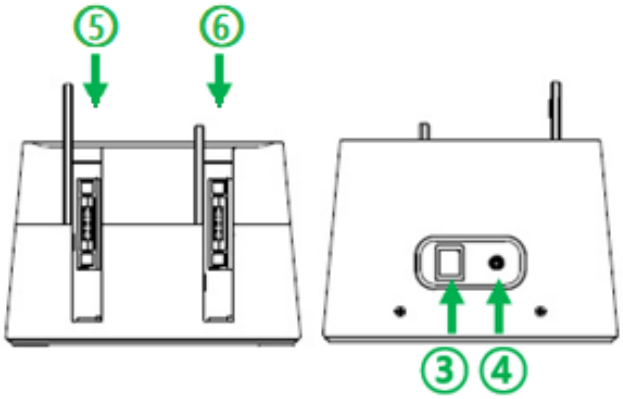

No.	Name	Description
3	**Power Switch**	Cradle power switch (on or off)
4	**Input Port of DC power**	DC +24V • Supplies power to the cradle
5	**Slot B**	Slot B • Supplies power to the detector or the battery charger (FXRC-04A)
6	**Slot A**	Slot A • Supplies power to the detector or the battery charger (FXRC-04A)

2.9 Battery Charger (FXRC-04A) – Optional

Battery charger is for the quick charging of the battery back provided with the detector. This equipment can be supplied power through the specific AC-DC adaptor and the cradle(FXRR-01A).

2.9.1 Specifications

Item	Specification
Model	• FXRC-04A
Power Supply	• Input: DC +24V, 3.33A Max.
Dimension (H × W × D)	• 304.0㎜ × 230.0㎜ × 15.5㎜
Tray	• A, B (2 each)
Weight	• 550g

2.9.2 Drawings

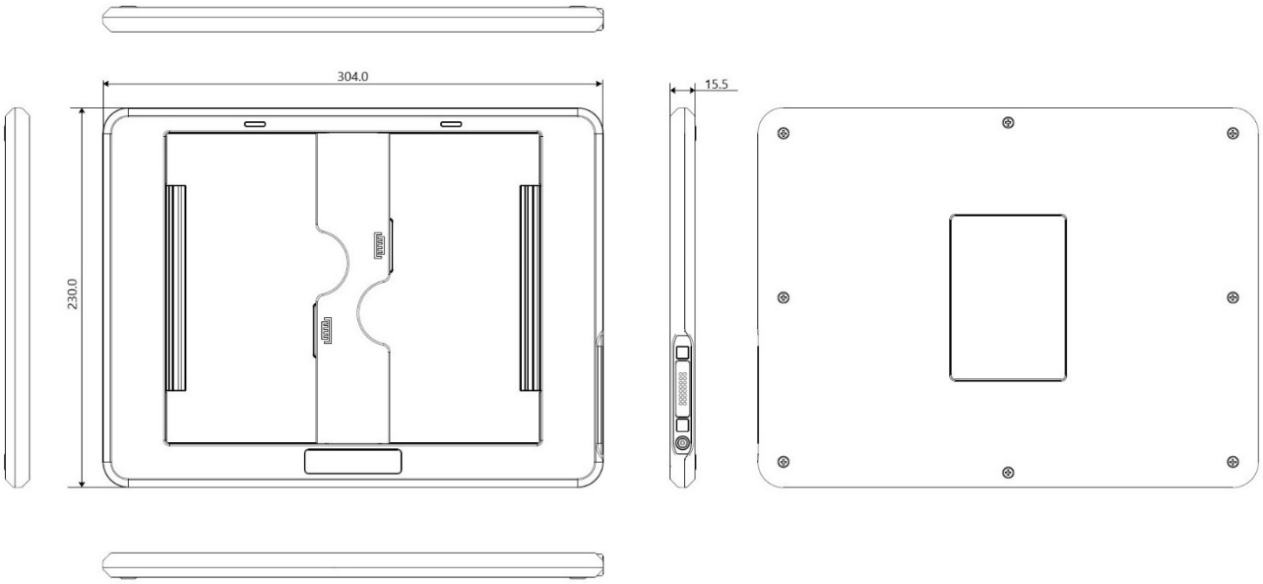

2.9.3 Functions

Front / Side

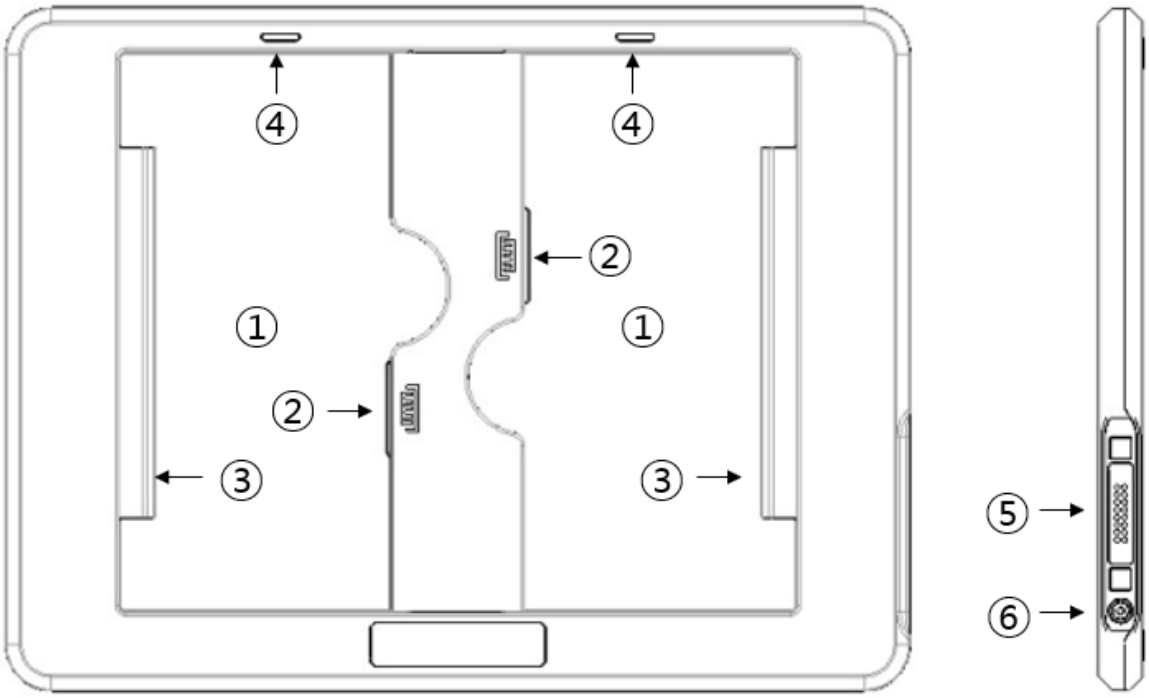

No.	Item	Description
1	**Battery Tray**	Battery cover
2	**Battery Interface**	Battery link connector
3	**Battery Fixer**	Anchoring device that fixes battery to the tray
4	**Charging Status Indicator**	Displays the charging state of the battery equipped in each battery tray • Orange: Charging • Green: Charged
5	**Cradle Attaching Connector**	DC +24 • Supplies power to the battery charger when installing to cradle
6	**DC Power Input Port**	DC +24 • Supplies power to the battery charger when not installing to cradle

Rear

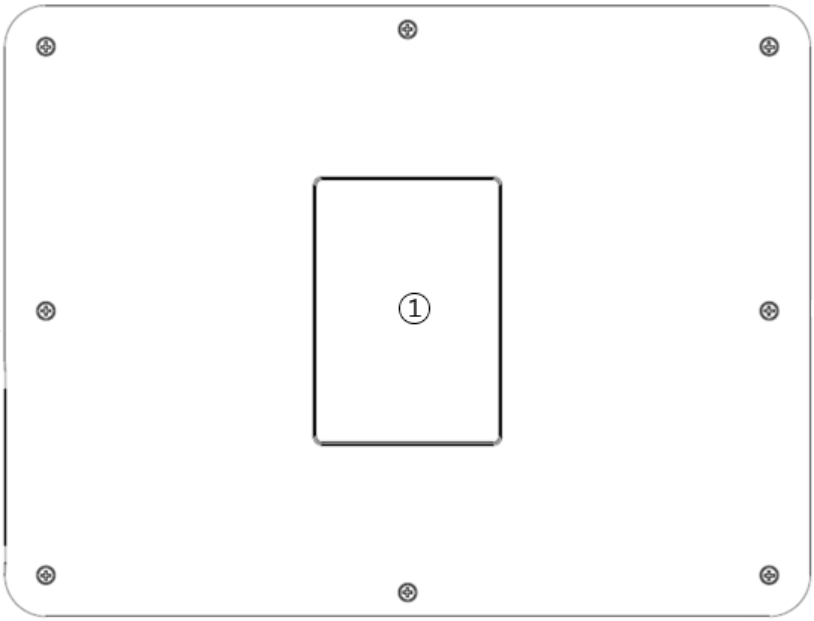

No.	Item	Description
1	**Label Attachment**	Label attached area

2.10 Wireless Power Transmitter (FXRC-05A) – Optional

This equipment wirelessly supplies up to 15W of power to the detector. This equipment should be connected to electrical power. The available voltage of power is DC 17V±10% (DC 15~19V), Max. 24W.

2.10.1 Specifications

Item	Specification
Model	• FXRC-05A
Power Supply	• Input: DC +17V, Max.1.41A
Dimension (H × W × D)	• 133.5㎜ × 77.0㎜ × 8.0㎜
Weight	• 80g

2.10.2 Drawings

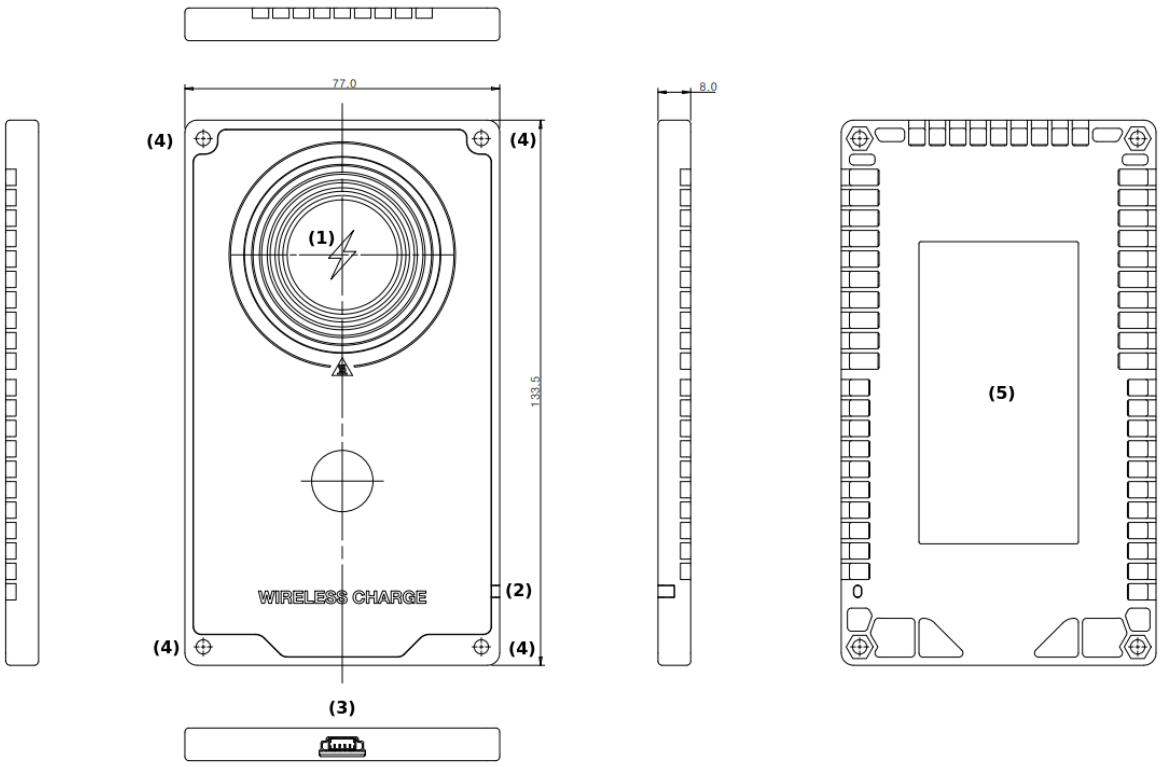

2.10.3 Functions

Front / Side / Rear

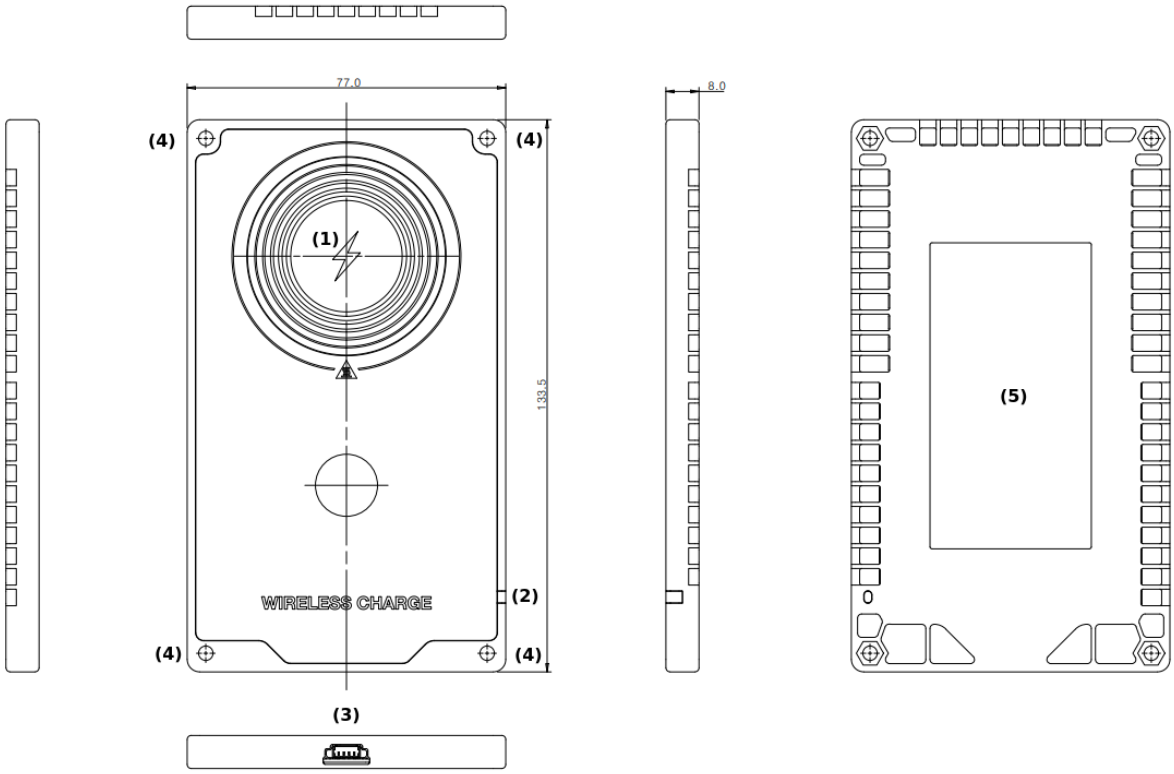

No.	Item	Description
1	**Wireless Power Transmitting Antenna**	Wireless power transmitter
2	**State LED**	Displays active state • OFF : Wireless power transmitter is off • Green : Wireless power is being transmitted. • Orange : Error state
3	**DC Power Input Port**	DC +17V • Supplies power to the wireless power transmitter
4	**Setscrew Hole**	Hole that fixes wireless power transmitter (4ea)
5	**Label Attachment**	Label attached part
6	**Infrared Optic Acquisition**	Infrared receiver to control wireless power from detector.

- Contact with your hands immediately after using this product may result in burns. Please handle the device 10 seconds after turning off the power.
- Do not use while the Wireless Charger charging by placing it within 20cm of the human body.

2.11 Others

2.11.1 X-ray Generator (Recommended Exposure Condition)

Item	Recommended condition
X-ray energy range	• 40kVp ~ 150kVp
Reliability (Lifetime Dose)	• 74Gy or more (35 uGy x 365days x 24hrs. x 60min. x 60sec. / 15sec.)

2.11.2 Recommended Specifications of Workstation (PC)

Item	Minimum Specifications	Recommended Specifications
OS	Windows 7 Professional SP1 (64bit) Windows 8.1 Professional (64bit)	Windows 10 Professional (64bit)
LAN Card	• Gigabit Ethernet card for detector interface (Intel® Series) ▫ Speed: 1Gbps ▫ Jumbo Frames: supports 9K ▫ Receive Descriptors: 1024 ▫ 820.11ac (wireless) • LAN card for network interface (separate)	• 1000BASE-T Gigabit Ethernet card for detector interface (Intel® I210 Series) ▫ Speed: 1Gbps or more ▫ Jumbo Frames: supports 9K ▫ Receive Descriptors: 2K or more ▫ 820.11ac (wireless) • LAN card that supports gigabit for network interface (separate)
CPU	CPU available to support AVX and SSE	Intel® i5 Quad Core @2.5 ㎓ or more (or compatible with CPU)
Memory	4GB	8GB or more
HDD or SDD	1TB	2TB or more
Monitor	General monitor : 1280 x 800	General monitor : 1920 x 1080, 2560 x 1440 Surface pro 4 : 2160 x 1440
CD-ROM		CD or DVD Reader / Writer

	• After January 14, 2020, Microsoft will no longer provide security updates or support for PCs running Windows 7. As this increases your chances of getting infected with new viruses or malware, we recommend upgrading to Windows 10, which continues to offer security updates.

3. System Configuration

This section gives information about the various connection / configuration ways among the detector, SCU, workstation and X-ray generator.
You can figure out the most suitable way of system configuration through this instruction.

Detector Connection Methods
Diagram
System Configuration
Changing Wireless Setting
Generator Interface
Configuring DR Trigger Interface

3.1 Detector Connection Methods

You can organize wired or wireless connection between the **VIVIX-S FW** detector and **SCU**. You can also choose other connection ways suitable for the use environment in case of need.

3.1.1 Wireless Connection

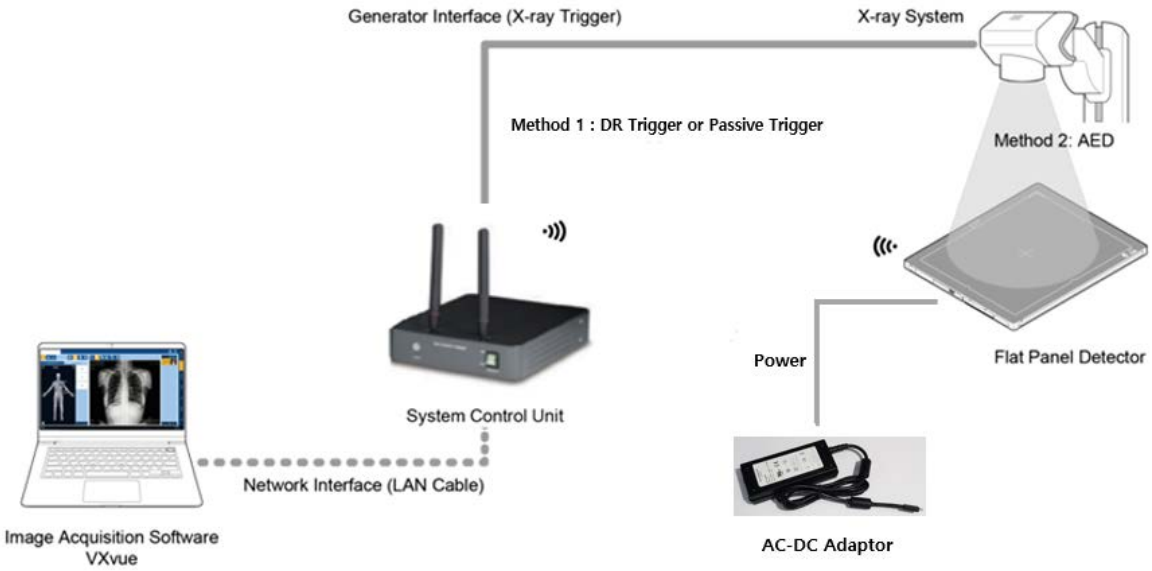

- The VIVIX-S FW Detector and PC (Workstation) connect wirelessly to transfer video and data to a PC. Using the SCU mini (FXRS-04A), you can use the DR Trigger interface as well as AED (Auto Exposure Detection) interface with the generator interface on Radio mode. However, Passive Trigger interface is unavailable. The only available interface on Multi-frame mode, including PF mode and CF mode, is AED interface.
- Instead of using the SCU mini (FXRS-04A) as an AP, you can use an external AP. In this case, the AED interface is the only available part.
- If your PC (Workstation) supports Wi-Fi, you can connect directly to your PC using the detector as an AP without a separate AP (SCU, external AP). In this case, the AED interface is the only available part.

- In a wireless connection, the detector is powered by a battery basically. However, if you connect an AC-DC adapter, the detector receives power from the adapter and the battery charges quickly.

	• We recommend you use the wireless connection method for the following cases. ▫ When using the unfixed detector. ▫ When the wired communication is in trouble by the interruption of cables. • The wireless connection is more freely to operate devices than the wired connection. • Use the wireless connection with a laptop computer to enhance mobility.

	• Be sure to operate the wireless communication between the detector and SCU within a maximum of **8m**. • Use of multiple WLAN devices within the same frequency band may interfere with each wireless communication and cause a decline in transmission speed.

	• Do not cover or block the wireless LAN antenna of the detector. Also, do not put any shielding materials between the detector and SCU. Otherwise, the transmission speed or operable distance may be reduced.

3.1.2 Wired Connection

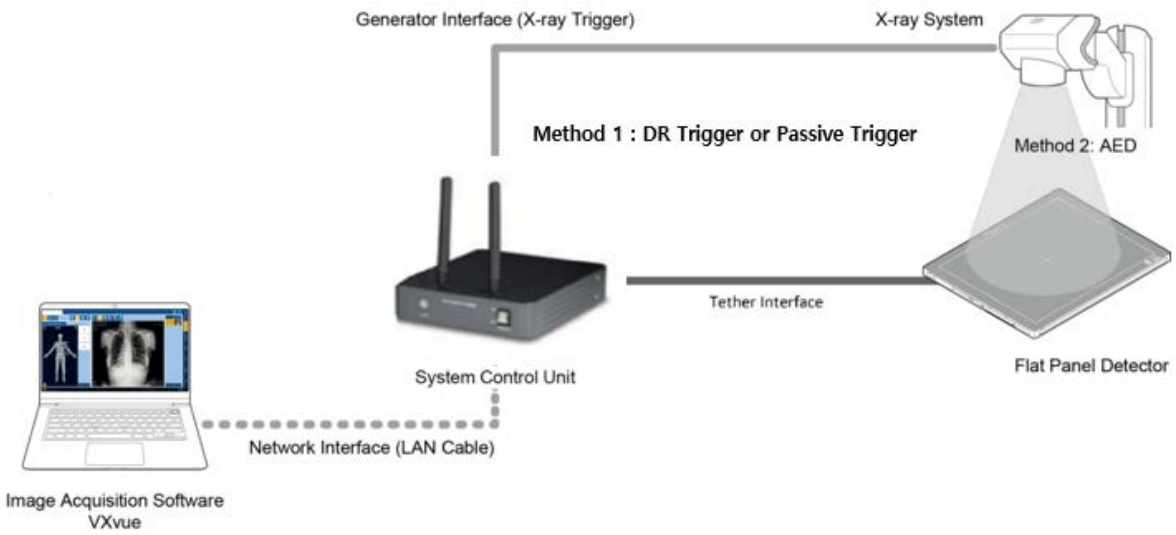

- The **VIVIX-S FW** detector is wired to the PC (Workstation) via the SCU and transmits image and data to the PC.
- If using the SCU Multi (FXRS-03A), you can use the DR Trigger and Passive Trigger interfaces as well as AED (Auto Exposure Detection) interface with the generator interface.
- When in the use of SCU mini (FXRS-04A), Passive Trigger interface becomes unavailable on Radio mode, whereas AED and DR Trigger interfaces are available. The only available interface on Multi-frame mode, like PF mode and CF mode, is AED interface. When the detector is wired, the battery is charged while the detector is powered by the tethered interface cable.

	• We recommend you the wired connection in the following cases. ▫ If the detector needs a constant power supply. ▫ When the detector is fixed to a bucky stand or a table. ▫ If you want data communication faster than wireless connection. • In a wired connection, wireless communication is disabled. • Use FW tethered interface cable when wiring the detector to SCU Mini. • Use FW tethered interface cable when wiring the detector and SCU Multi.

	• VW tethered cable is only for SCU Mini, and FW tethered cable for SCU Multi. If not, the detector may get damaged.

3.2 Diagram

3.2.1 Block Diagram

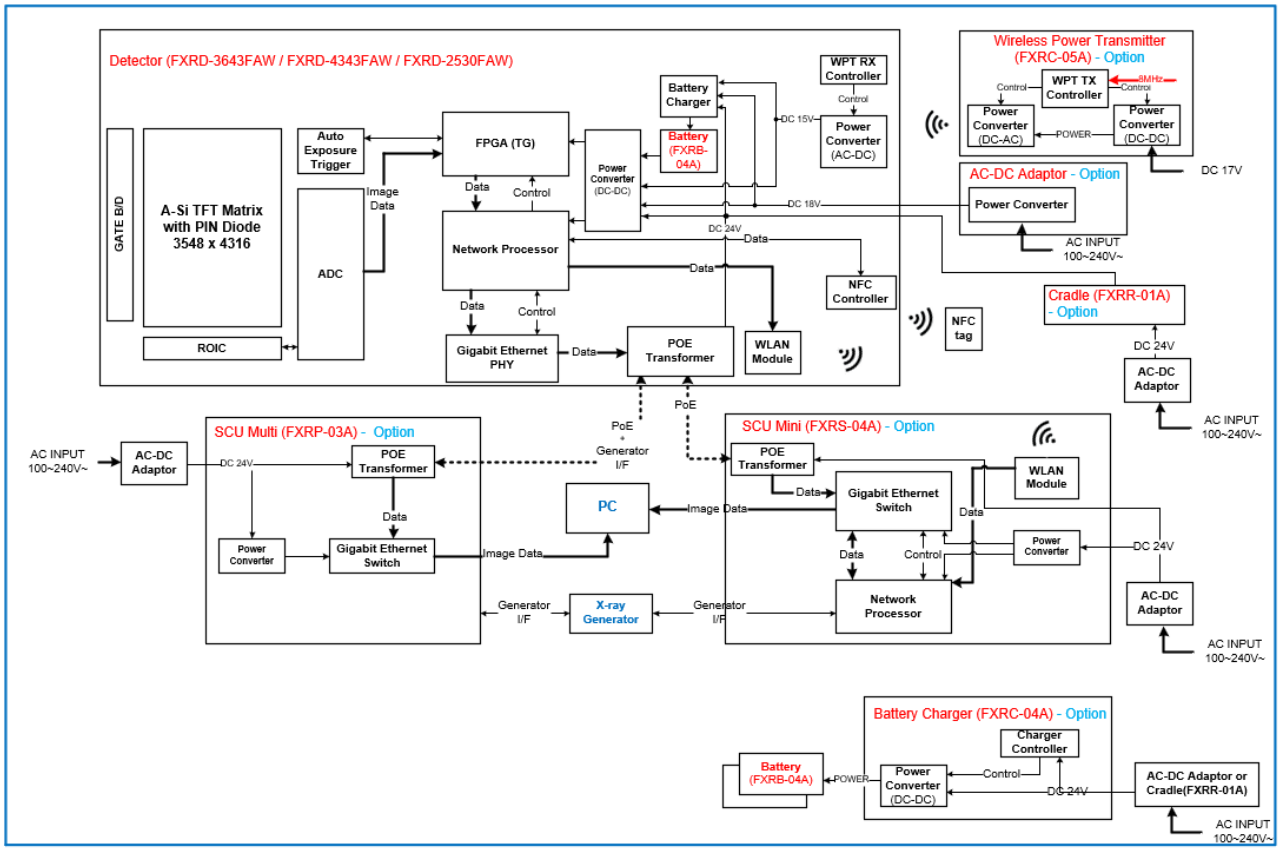

3.2.2 Wiring Diagram

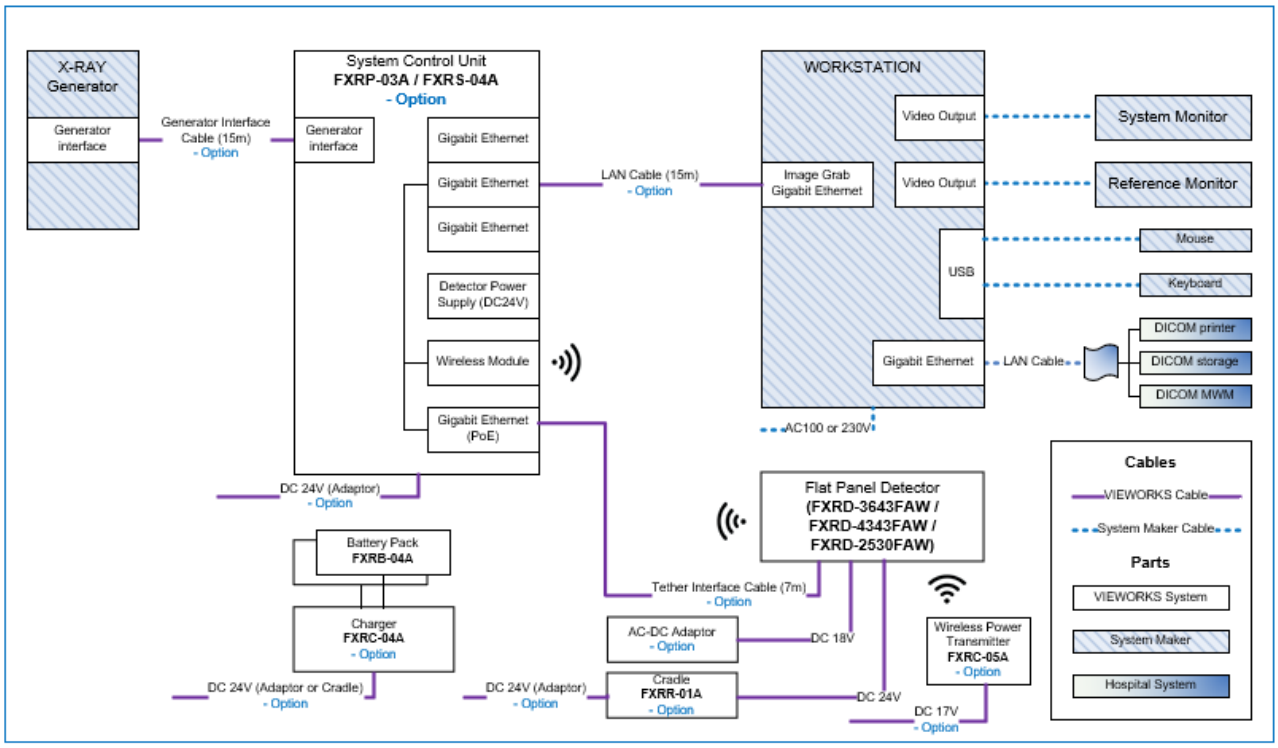

3.3 System Configuration

This section gives information about the configuration modes of **VIVIX-S FW** detectors, SCU, workstation and the generator.

3.3.1 SCU AP Mode

In SCU AP mode, the detector and the SCU mini (FXRS-04A) are connected wirelessly, and the SCU mini and PC are connected by wired.

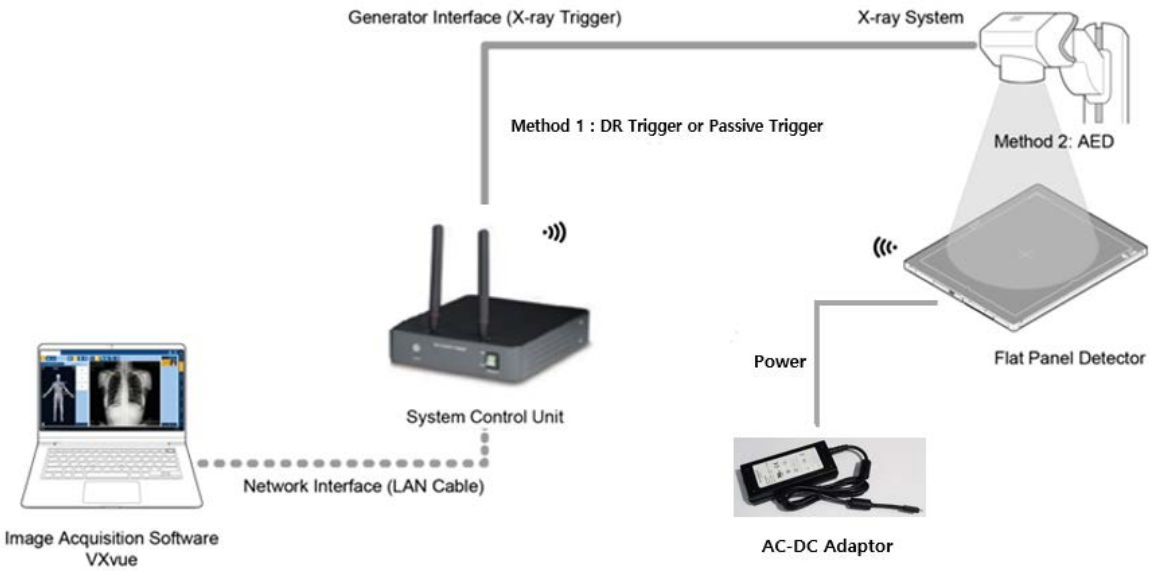

SCU mini & Detector

- SCU and the detector are connected wirelessly. In this case, SCU operates as AP (Access Point) and detector as STATION.
- Basically, the detector is powered by a battery. However, when you connect the AC-DC adapter to the detector, it receives power from the adapter and the battery charges quickly.

	• The SCU mini (FXRS-04A) supports IEEE802.11n and has two antennas, having 40MHz bandwidth. Therefore, SCU AP mode is IEEE802.11n / MIMO 2x2 / 40MHz bandwith, so the data transfer rate is up to 300Mbps.

SCU mini & PC (Workstation)

- SCU mini and PC (Workstation) are connected with the LAN cable.

SCU mini & X-ray Generator

- SCU and the X-ray generator are wired by the generation interface cable, and can use DR Trigger interface, but Passive Trigger, on Radio mode. The only available interface on Multi-frame mode, like PF mode and CF mode, is AED interface.

- If you use the detector's **AED** mode as the generator interface, it is unnecessary to wire the SCU and the generator.

- With the use of SCU mini (FXRS-04A), Passive Trigger interface becomes unavailable on Radio mode, whereas AED and DR Trigger interfaces are available. The only available interface on Multi-frame mode, like PF mode and CF mode, is AED interface.

3.3.2 External AP Mode

External AP mode uses the external AP instead of the SCU mini (FXRS-04A) in SCU AP mode. The detector and external AP are connected wirelessly, and the SCU and PC are wired.

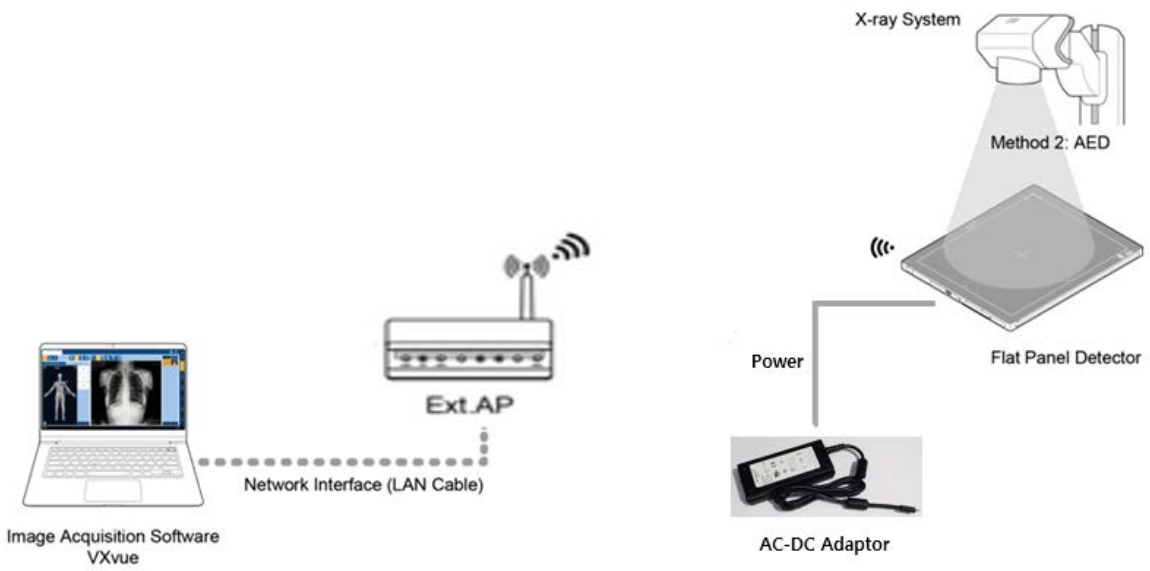

External AP & Detector

- The external AP and **VIVIX-S FW** detectors are connected wirelessly. In this case, the external AP and the detector operate as **AP** (Access Point) and **STATION** respectively.
- By default, the detector is powered by a battery. However, when the detector is connected to the AC-DC adapter, it receives power from the adapter and the battery charges quickly.

- For optimum wireless performance, it is recommended to use an external AP that supports IEEE802.11ac and has three antennas with 80MHz bandwidth. For optimal wireless connectivity, the external AP mode is MIMO 3x3 / IEEE802.11ac / 800MHz, so data transfer rate is up to 1300Mbps

- Be sure to check the specifications of external AP device when configuring the external AP mode, since the wireless communication performance can be different by the specifications.

External AP & PC (Workstation)

- The external AP and PC are connected with a LAN cable.

	• Since the SCU is not used in FW detector models, it cannot be wired with the X-ray generator, and only **AED** mode can be used (**DR Trigger** or **Passive Trigger** interfaces are not available).

3.3.3 Detector AP Mode

Detector AP mode is a method of wirelessly communicating with a PC using a detector as an AP without a separate AP (SCU, external AP).

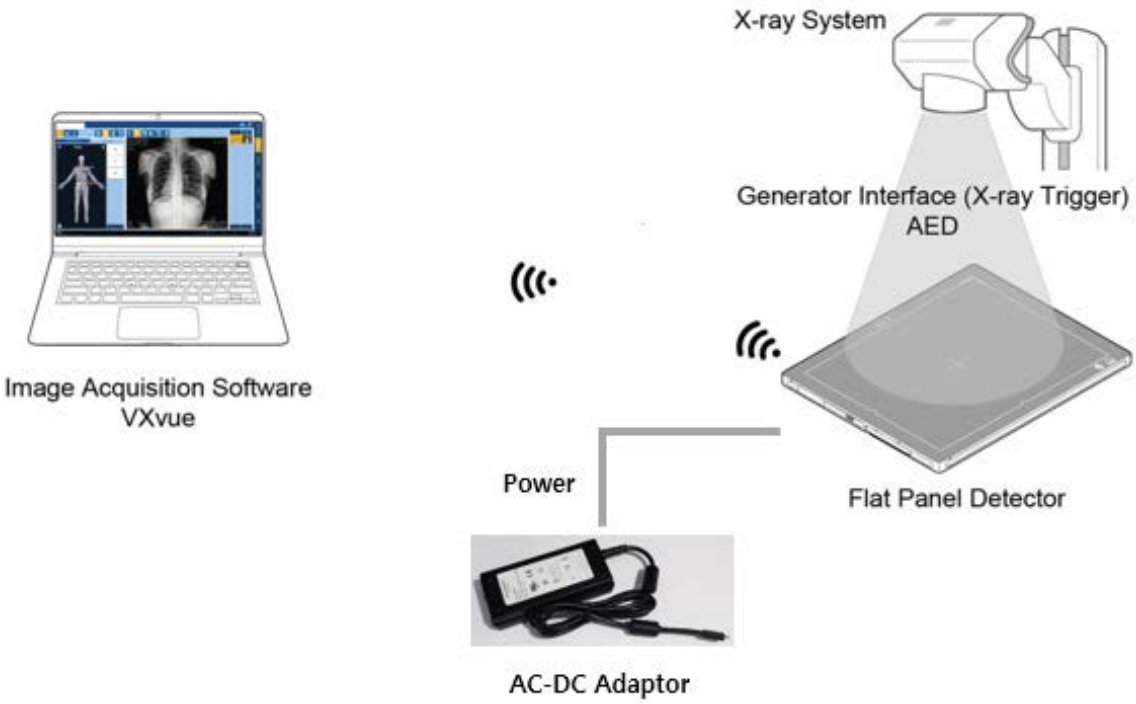

Detector & PC (Workstation)

- The PC and **VIVIX-S FW** detectors are connected wirelessly. In this case, the detector operates as an AP (access point) and the PC operates as a station.
- By default, the detector is powered by a battery. However, when the detector is connected to the AC-DC adapter, it receives power from the adapter and the battery charges quickly.

	• PC (Workstation) should support Wi-Fi. • Since the SCU is not used in FW detector models, it cannot be wired with the X-ray generator, and only **AED** mode can be used (**DR Trigger** or Passive Trigger interfaces are not available). • You can use this mode to move or carry the product.

- For optimum wireless performance, it is recommended to use an external AP that supports IEEE802.11ac and has three antennas with 80MHz bandwidth. For optimal wireless connectivity, the external AP mode is MIMO 3x3 / IEEE802.11ac / 800MHz bandwidth, so data transfer rate is up to 1300Mbps

- Be sure to check the specifications of external AP device when configuring the external AP mode, since the wireless communication performance can be different by the specifications.

3.3.4 Tether Interface Mode

The tether interface mode is a wired connection between the detector and the SCU mini (FXRS-04A) or SCU Lite (FXRP-02A), and the SCU and PC are also wired.

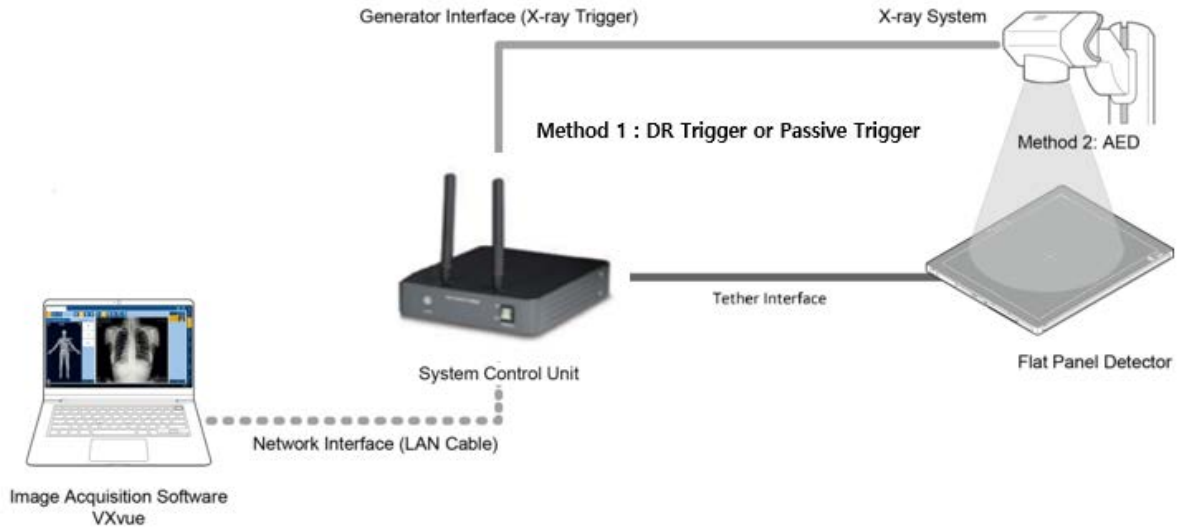

SCU & Detector

- SCU and the **VIVIX-S FW** detectors are connected with the tether interface cable.
- Power is supplied from the SCU via the tether interface cable and the battery is charged.

- If you connect an AC-DC adapter in tether interface mode, the system is powered from the tether interface and not from the AC-DC adapter.

SCU & PC (Workstation)

- SCU and PC are wired using LAN cable.

SCU & X-ray Generator

- You can use generator interface cable to wire SCU Multi (FXRP-03A) and X-ray generator to use DR Trigger or Passive Trigger interfaces.
- When wiring X-ray generator and SCU mini (FXRS-04A) with the generator interface cable, you can use DR Trigger interface, but Passive Trigger interface, on Radio mode. The AED interface is the only available interface on Multi-frame mode, like PF mode and CF mode.

- If you use the AED interface of the detector as the generator interface, there is no need to wire the SCU to the generator.

- With the use of SCU mini (FXRS-04A), Passive Trigger interface becomes unavailable on Radio mode, while Passive Trigger and DR trigger interfaces become unavailable on Multi-frame mode, including PF mode and CF mode. Exposure may still work, but image quality is not guaranteed.

3.3.5 Detector Stand-Alone Mode

You can use the **Stand-Alone** mode without making a wired or wireless connection.

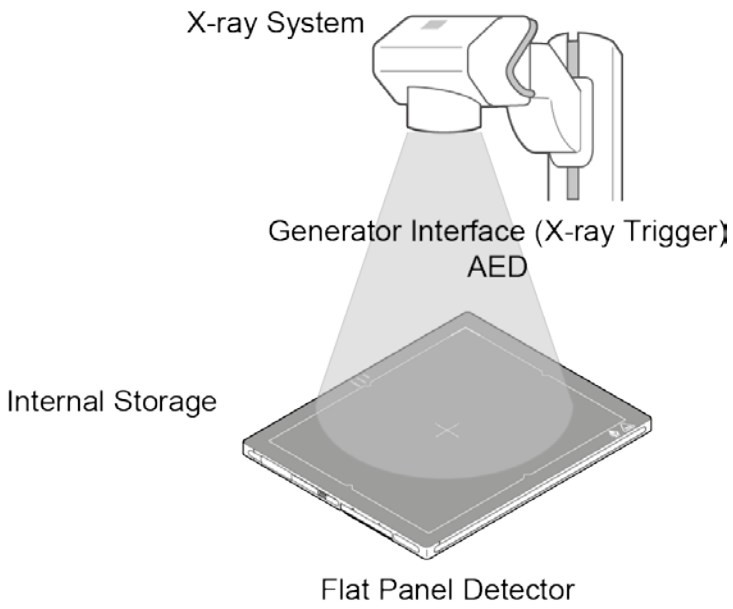

- Only **AED** mode can be used. (**DR Trigger** or Passive Trigger interfaces are not available.)
- The acquired images are stored in the internal storage of the detector in order and the images can be transmitted to the PC after connecting the detector to the PC.
- The transmitted images to PC are removed automatically from the detector.

3.4 Changing the Wireless Setting

In a wireless connection, the VIVIX-S FW detector provides an external AP button to facilitate changing wireless settings. You can select the function of the AP button in VIVIX Setup as follows:

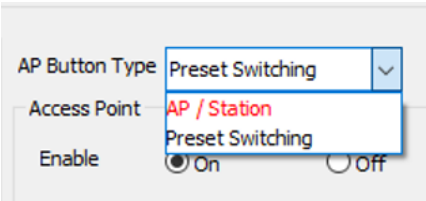

Function	Description
Detector AP / Station	Switch the detector from **AP** to **STATION** or from **STATION** to **AP**.
Preset Switching	If you press the AP button for about 3 seconds while the detector is in **STATION**, it scans the neighboring APs and automatically changes to the one with the highest signal strength among the detected APs. When changing an AP, change the detector setting that is set for use when connecting with the AP.

In addition, there is a function to synchronize wireless settings over a wired connection.

3.4.1 Detector AP / Station

The AP button allows you to easily switch the detector from STATION mode (SCU AP mode or external AP mode) to AP mode, or from AP mode to STATION mode.

Use the AP Button

1 In the wireless connection, when the detector is STATION, press the AP button for about 3 seconds to switch the detector to the AP. Also, when the detector is an AP, pressing the AP button for about 3 seconds will switch the detector to STATION.

2 During switching, the OLED display shows 'Changing Settings'. After switching, you can check the changed settings.

Use VIVIX Setup

1 In the Detector Configuration window of the VIVIX Setup, change the AP settings.

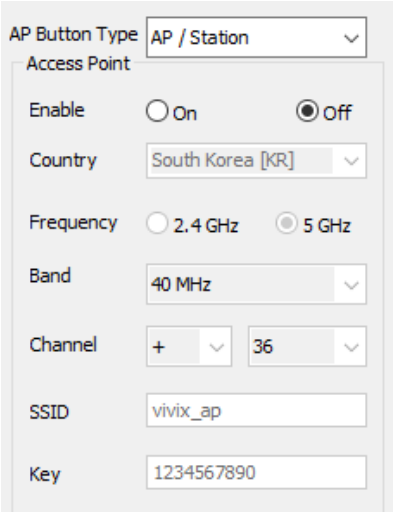

- Available only when tether interface cable is not connected and in wireless communication status.
- Refer to the **VIVIX Setup Operation Manual** for details on the detector AP / Station.

3.4.2 Preset Switching

AP button

- Using the AP button, you can easily change the external AP when the detector is in STATION.
  - Ex) You can use this function when you have one detector and want to use it in both ROOM # 1 and ROOM # 2. In ROOM # 1, connect wirelessly to AP①, move to ROOM # 2 and press the AP button of the detector for 3 seconds to disconnect AP① and automatically connect to AP②.

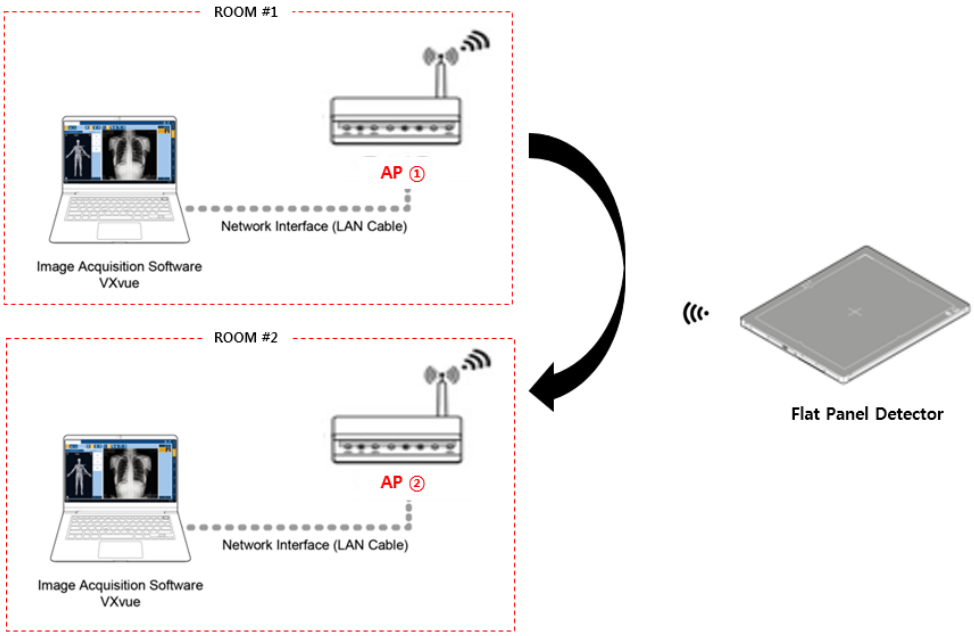

- When the detector is in STATION, pressing the AP button for about 3 seconds will scan the surrounding AP and automatically change to the AP with the largest signal strength.
- In order to change AP automatically, the SSID and KEY of the AP to be changed must be registered as a preset in the detector. If you want to connect the detector to an AP in multiple places, you must register the list of AP devices to be connected as a preset list. AP devices not registered in the preset list cannot be automatically connected even if the AP button is pressed.
- Preset list can be registered as follows using VIVIX Setup program.

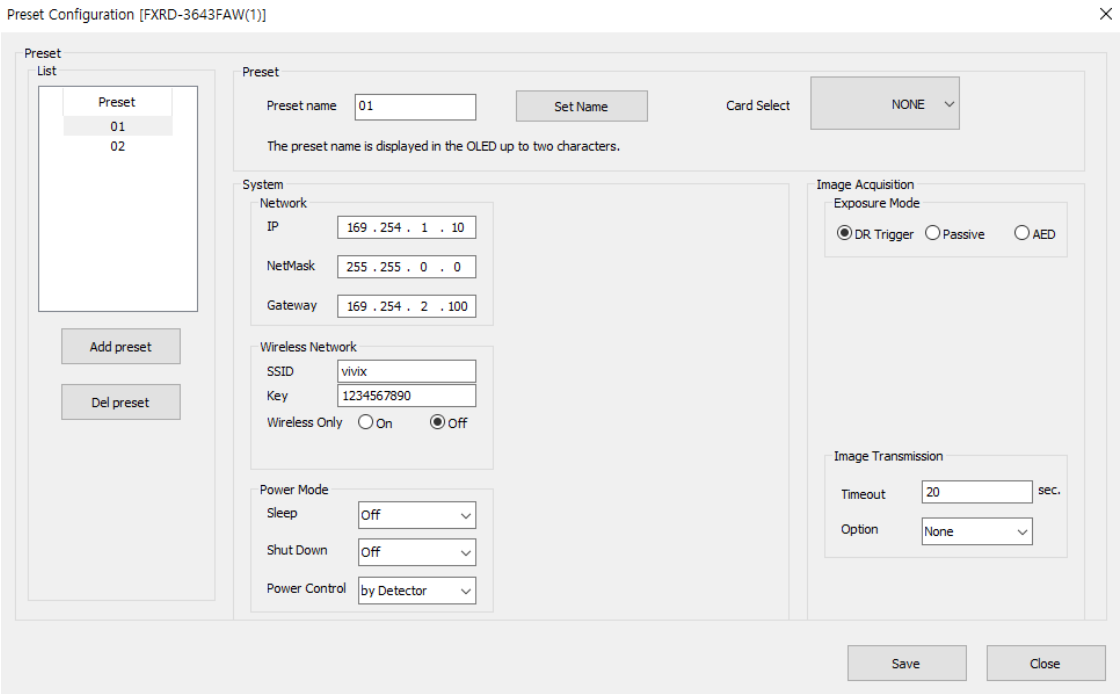

- The first two letters of the preset name are displayed as the preset identifier on the OLED default screen. Therefore, it is recommended to set the preset name so that it can be distinguished by the first two letters.
  - Ex) Preset name of X-ray ROOM #1 and X-ray ROOM #2 is set to R1 and R2 each.
- After registering the preset list, it is recommended to use the Preset Load function manually to synchronize with the current settings.
- Preset contains the following information as well as the SSID and KEY values of the AP to be connected. Therefore, other settings can be automatically changed according to the room environment where the external AP is located.

Item	Description
Network	IP address, Netmask, Gateway
Wireless Network	SCU, or SSID and KEY of external AP Wireless only option
Power Mode	Whether to use Sleep, Shutdown, and Power control
Exposure Mode	DR Trigger, AED
Image Transmission	Ttransmission times out, Preview option

Preset Switching

1 While scanning a neighboring AP, the OLED display shows AP scanning.
2 If there is an AP registered in the preset list among the neighboring APs, it is connected to the corresponding AP, excluding the last connected AP, and the AP is indicated as changing on the OLED display.
3 When the AP connection is complete, the Preset identifier of the AP connected to the OLED default screen is displayed blinking.
4 The blinking of the preset identifier lasts 30 seconds. If you press the AP button again for 3 seconds while blinking, AP scanning will not be performed again, and the AP will be connected to the AP with the highest signal strength among the currently scanned AP devices except the currently connected AP.
5 If there are no more accessible APs among the existing AP devices, the Preset identifier will stop blinking. If the AP button is pressed while the flashing stops, the peripheral AP scan is performed again.

- This function is available only when the detector communicates wirelessly in the STATION mode (SCU AP mode, external AP mode). (No tether interface cable connected)
- Refer to the **VIVIX Setup Operation Manual** for details on how to register a preset.

NFC Card

Using the NFC Card, you can easily change the external AP when the detector is in STATION.

- Ex) You can use this function when you have one detector and want to use it in both ROOM A and ROOM B. If you were using the detector, wirelessly-connected to AP①, in Room A and have moved to Room B, you can change to the Preset registered in the NFC Card by tapping the NFC Card to the NFC antenna on the back of the detector, which not registered to the user S/W. If the corresponding Preset is set to be wirelessly connected to AP②, disconnect the connection with AP①. Then, it will be automatically connected to AP②.

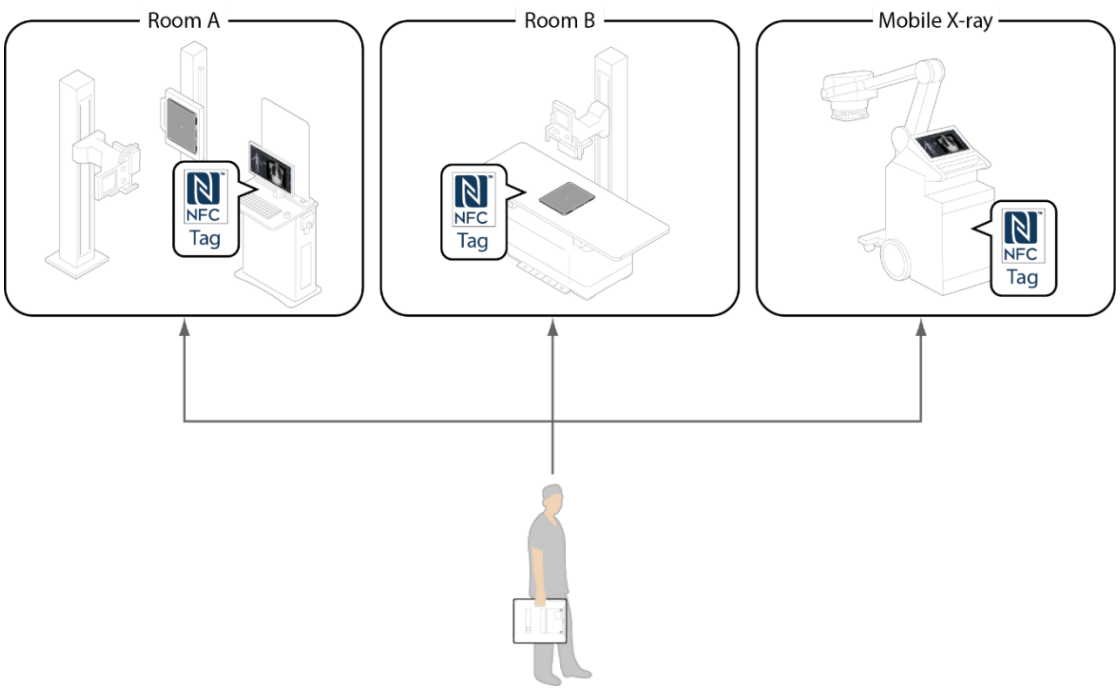

How to change the detector setting with NFC card

1 When on tethered-interface mode, press the AP button for 3 seconds to make the detector change the SSID and KEY to the same values in the wired SCU.
2 Break connection if the detector is connected to VIVIX Setup.
3 Tap the NFC card on the NFC antenna on the back of the detector. Before tapping, the NFC card should be connected to the Preset you want to change to.
4 If the detector recognizes the card, you will hear beeping sound from the speaker, and the preset identifier changes from OLED display.
5 Check the changes from OLED display.
6 If communication is made, check the changes from VIVIX Setup.

- To change the detector setting with NFC card, the NFC card should be registered to Preset Configuration in VIVIX Setup and connected to the NFC card you want to use. Then, tap the NFC card on the NFC antenna on the back of the detector to change Preset setting.
- If the detector is connected to the user S/W, NFC card becomes unavailable.
- The preset identifier connected to the NFC card should be different from the previous one.
- Refer to **VIVIX Setup Operation Manual** for more details in Setting.

- The engineer with deep experience of **VIVIX Setup**, Windows system, and wired/wireless network should be in charge of the device setting. If not, an error may occur during operation, and image quality is not guaranteed.

3.4.3 Sync Wireless Settings

You can easily switch from tether interface mode to SCU AP mode.

1 In the tether interface mode, press the AP button for about 3 seconds to change the detector to the same SSID and KEY as the wired SCU.
2 During synchronization, the OLED display shows 'Changing Settings'. After switching, you can check the changed settings.

- For details on the synchronization of wireless setup, refer to the **VIVIX Setup Operation Manual**.

3.5 Generator Interface

VIVIX-S FW detectors provide **AED** interface, **Passive Trigger** interface, and **DR Trigger** interface as a generator interface method to acquire images by detecting X-ray.

There are 3 types of generator interfaces determined by the method of system configuration: The system configuration with SCU Multi (FXRP-03A) supporting all the generator interfaces, the system configuration with SCU mini (FXRS-04A) supporting AED and DR Trigger interfaces on Radio mode, and the system configuration on Multi-frame mode including PF mode and CF mode (supporting only AED interface). Other system configurations only support AED interface.

Mode	Description
AED	The detector detects X-ray exposure from the generator automatically and then performs image acquisition without any cable connection.
Passive	The detector shooting is made by receiving the agreed signal from the generator. • Use generator interface cable to wire SCU Multi (FXRP-03A) and the generator. • SCU mini (FXRS-04A) does not support Passive Trigger interface.
DR Trigger	The detector and generator receive and send their signal to each other for image acquisition. • SCU Multi (FXRS-03A) and X-ray generator should be connected to a generator interface cable. Connect the SCU mini(FXRS-04A) and a generator with the generator interface cable on Radio mode. SCU mini(FXRS-04A) does not support DR Trigger on Multi-frame mode, like PF mode and CF mode)

3.5.1 AED (Auto Exposure Detection) Interface

If you use VIVIX-S FW detector as AED interface, you can acquire an image without having to connect the detector to the generator with a cable. The detector detects the X-ray shot from the generator and automatically starts shooting.

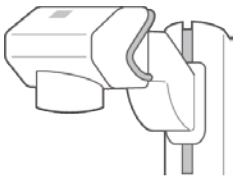

X-ray Generator System

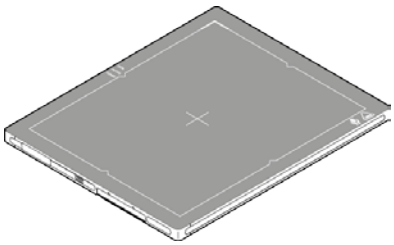

- Follow the conditions of operational environment.0 (Temperature: 0℃ ~ +40℃).
- Do not give shock on the product. Or, images may be acquired without X-ray shooting due to the malfunction occurred from the AED sensor.

- Images may not be acquired due to the external circumstances, like exposure condition, thickness of subject, and grid availability, or horizontal noise line may be generated.
- When setting the X-ray exposure area to the direction facing the detector, the center of the detector should be included in the X-ray exposure area. If not, acquiring image may not be successful.

3.5.2 Passive Trigger Interface

To form **VIVIX-S FW** detector as **Passive Trigger** interface, the generator should transmit EXP_REQ signal to the detector through SCU. The generator shoots the X-ray by sending the EXP_REQ signal to the detector, and the detector synchronizes the signal to start shooting.

- EXP_REQ is the signal that X-ray generator sends to the detector to requires shooting.

- The N ms, the actual time the X-ray is generated, should be shorter than the exposure time configured in the detector. If not, the image quality is not guaranteed.
- The N ms, the actual time the X-ray is generated, should range between 3ms and 5000ms. If not, the image may not be taken.

3.5.3 DR Trigger Interface

To form **VIVIX-S FW** detector as **DR Trigger** interface, the generator should transmit EXP_REQ signal to the detector through SCU. The detector sends the EXP_OK signal to the generator once it is ready for exposure, and the generator synchronizes the signal to shoot X-ray.

- **EXP_REQ** is the signal that X-ray generator sends to the detector to requires shooting.
- **EXP_OK** is the signal that the detector sends to the X-ray generator to inform that it is ready for exposure. Therefore, the generator shoots the X-ray when the EXP_OK is activated.

3.6 DR Trigger Interface

The detector and the X-ray generator should be connected by the generator interface cable to send or receive the synchronizing signal for X-ray exposure. Connect the one end of the generator interface cable to the **EXT_INT** port of SCU and the other end to the X-ray generator.

In DR Trigger interface, EXP_REQ and EXP_OK should be all connected between the SCU and the generator, whereas only EXP_REQ should be connected in Passive Trigger interface.

3.6.1 Trigger Interface Way

SCU Mini(FXRS-04A) can be wirelessly or wired connected to multiple detectors. If connecting multiple detectors to SCU Mini(FXRS-04A), the connection modes of generator interface cable vary by different Trigger interfaces.

SCU Multi(FXRP-03A) cannot be connected to multiple detectors.

Trigger Interface	Description
Packet Trigger	Handles exposure signal by exchanging packet.
Line Trigger	Handles exposure signal by exchanging electrical signal.

Packet Trigger

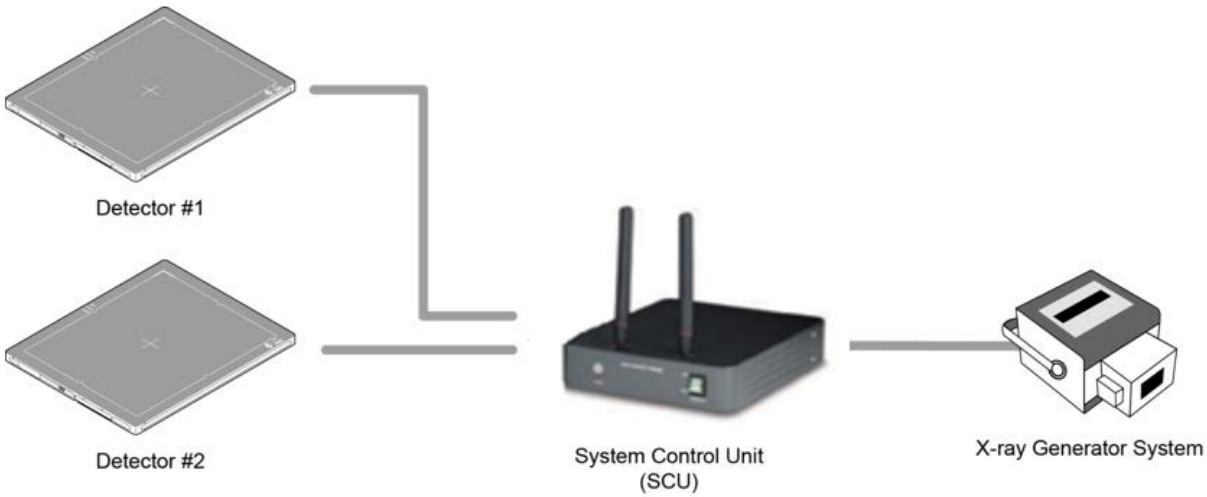

- Multiple detectors share one generator signal together.
- Connect a generator interface cable to one of the pin groups.
- The generator transmits and receives signal with the selected detector for taking images.

Line Trigger

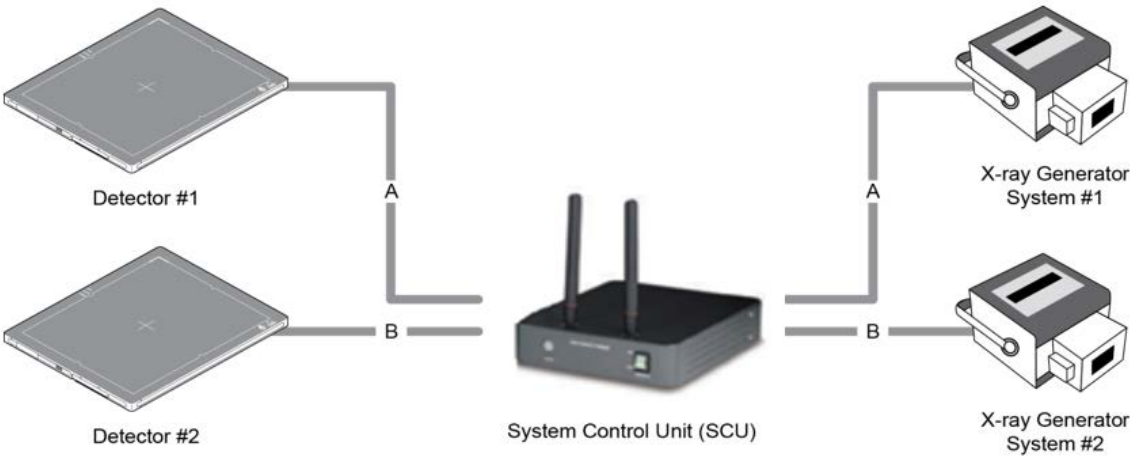

	• Each detector shares a signal by being connected with generators separately. • Up to two (2) X-ray generators can be connected to SCU. • The connection of each detector and generator can be configured from **VIVIX Setup**.

	• You should comprehend about a detector and X-ray generator to make correct exposure. Otherwise, X-ray can be exposed to the detector in different location. • The engineer who understand the generator device and interface technology should be in charge of interface work between SCU and the generator.

3.6.2 EXT_INF Port Pin Map

EXT_INF port is D-SUB 15 pin female connectors of SCU mini (FXRS-04A), and used for the generator interface.

Product	EXT_INF port
SCU mini (FXRS-04A)	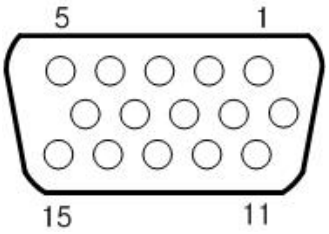

EXT_INF port pin map definition (1 ~ 15)

No.	Signal name	I/O	Type	Color	Ch.	Description
1	**EXP_REQ+_A**	Input	Contact	Red	A	Receives EXP_REQ
2	**EXP_REQ-_A**	Input	Contact	Black	A	Returns signal from EXP_REQ+_A
3	**EXP_REQ_TTL_A**	Input	TTL	Orange	A	Receives EXP_REQ
4	**EXP_REQ_GND_A**	Input	TTL	Gray	A	Returns signal from EXP_REQ_TTL_A
5	**EXP_OK_POWER_A/B**	Input	-	Yellow	A/B	Power of TTL signal
6	**EXP_OK+_A**	Output	-	Green	A	Sends EXP_OK
7	**EXP_OK-_A**	Output	-	Brown	A	Returns signal from EXP_OK+_A
8	**EXP_OK+_B**	Output	-	Blue	B	Sends EXP_OK
9	**EXP_OK-_B**	Output	-	Pink	B	Returns signal from EXP_OK+_B
10	**Reserved**	-	-	-	-	Reserved for test only.
11	**EXP_REQ+_B**	Input	Contact	White	B	Receives EXP_REQ
12	**EXP_REQ-_B**	Input	Contact	Purple	B	Returns signal from EXP_REQ+_B
13	**EXP_REQ_TTL_B**	Input	TTL	White/Red	B	Receives EXP_REQ
14	**EXP_REQ_GND_B**	Input	TTL	White/Black	B	Returns signal from EXP_REQ_TTL_B
15	**Reserved**	-	-	-	-	Reserved pin for test only.

Product	GEN-INF Port
SCU Multi (FXRP-03A)	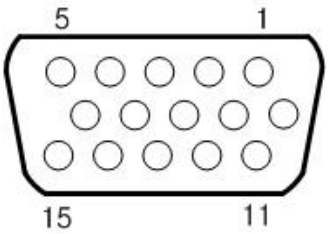

GEN-INF port pin map definition (1 ~ 15)

No.	Signal Name	I/O	Type	Color	Ch.	Description
1	**EXP_REQ+**	Input	Contact	Red	A	Receives EXP_REQ
2	**EXP_REQ-**	Input	Contact	Black	A	Returns signal from EXP_REQ+_A
3	**EXP_REQ_TTL**	Input	TTL	Orange	A	Receives EXP_REQ
4	**EXP_REQ_GND**	Input	TTL	Grey	A	Returns signal from EXP_REQ_TTL_A
5	**EXP_OK_POWER**	Input	-	Yellow	A	Power of TTL signal
6	**EXP_OK+**	Output	-	Green	A	Sends EXP_OK
7	**EXP_OK-**	Output	-	Brown	A	Returns signal from EXP_OK+_A
8	**NC**	-	-	-	-	-
9	**NC**	-	-	-	-	-
10	**NC**	-	-	-	-	-
11	**NC**	-	-	-	-	-
12	**NC**	-	-	-	-	-
13	**NC**	-	-	-	-	-
14	**NC**	-	-	-	-	-
15	**NC**	-	-	-	-	-

- There are **Contact** type (OPEN/ CLOSE) and **TTL** type (ON/ OFF) on the signal in/output pin.
- TTL type information
  - ON : VCC
  - OFF : GND
  - Current: 5 mA ~ 10 mA
  - Voltage: 12 V ~ 24 V

- When you plan to add interface using a user-defined pin, contact to the person in charge of Vieworks.

3.6.3 Input / Output Circuit

Exposure Request Input Circuit (EXP_REQ)

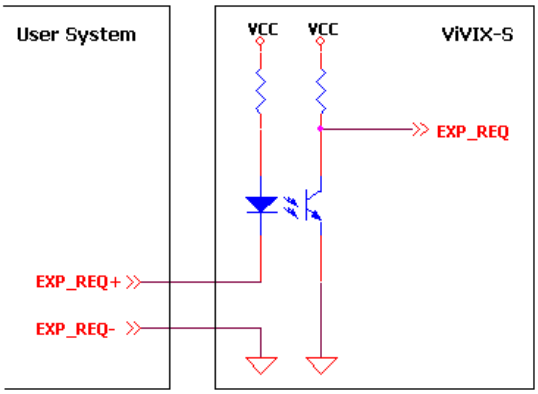

<Contact Type>

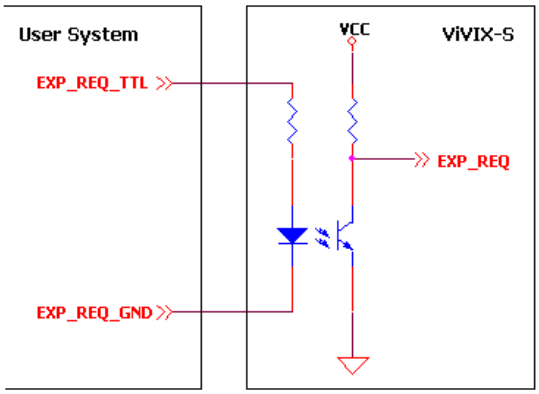

<TTL Type>

Exposure Respond Output Circuit (EXP_OK)

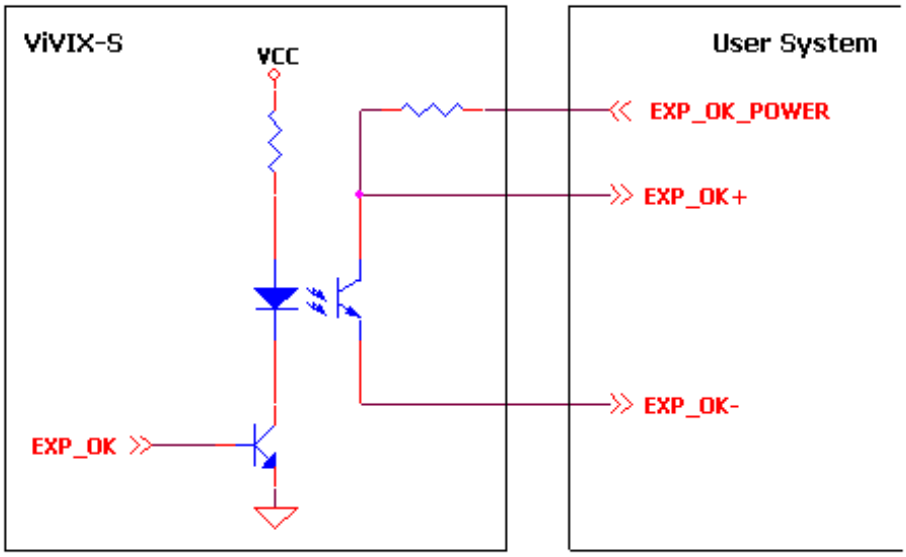

3.7 Radio Exposure Mode

Exposure mode of VIVIX-S FW are classified into Radio mode and Multi-frame mode. **FXRD-3643FAW** and **FXRD-4343FAW** support Multi-frame mode, while **FXRD-2530FAW** does not.

Radio mode is an exposure mode for 2D Radiography. It is a basic exposure mode that is considered as a default; the detector is automatically reset to the Radio mode when turnning on the power of the detector previously configured to other modes or when stopping sleep mode. The Radio mode is only available on Drive mode 0.

3.7.1 AED (Auto Exposure Detection) Interface

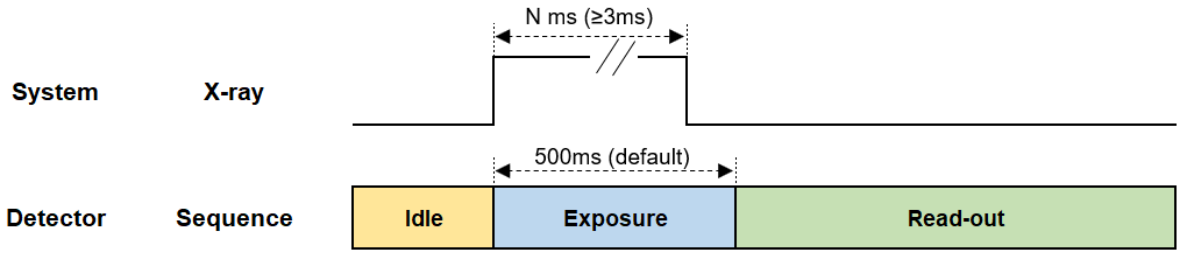

Signal Processing Order

1 X-ray generator exposes X-ray.
2 The detector sends the image data after acquiring image.

	• The default X-ray exposure time set in the detector is 500ms and can be changed by the user's settings.

	• N ms, which is the time that the actual X-ray is to be exposed, should be shorter than the exposure time set in the detector. Otherwise, abnormal images may be obtained. • N ms, which is the time that the actual X-ray is to be exposed, should be 3ms or less. Otherwise, the image may not be obtained.

3.7.2 Passive Interface

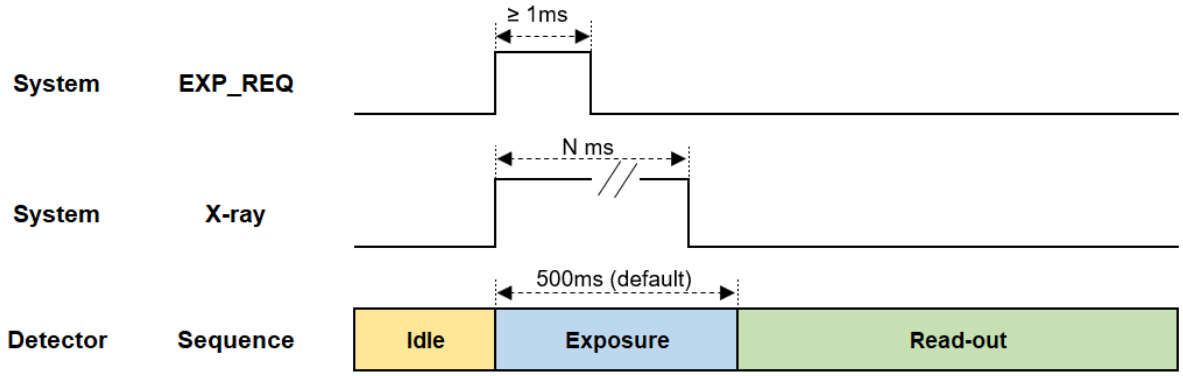

Signal Processing Order

1 X-ray generator sends **EXP_REQ** signal to the detector to expose X-ray.

2 The detector synchronizes **EXP_REQ**, and sends the image data after image acquisition.

- The default X-ray exposure time set in the detector is 500ms and can be changed by the user's settings.

- N ms, which is the time that the actual X-ray is to be exposed, should be shorter than the exposure time set in the detector. Otherwise, abnormal images may be obtained.
- **EXP_REQ** should be 1ms or longer. Or, image may not be acquired.

3.7.3 DR Trigger Interface

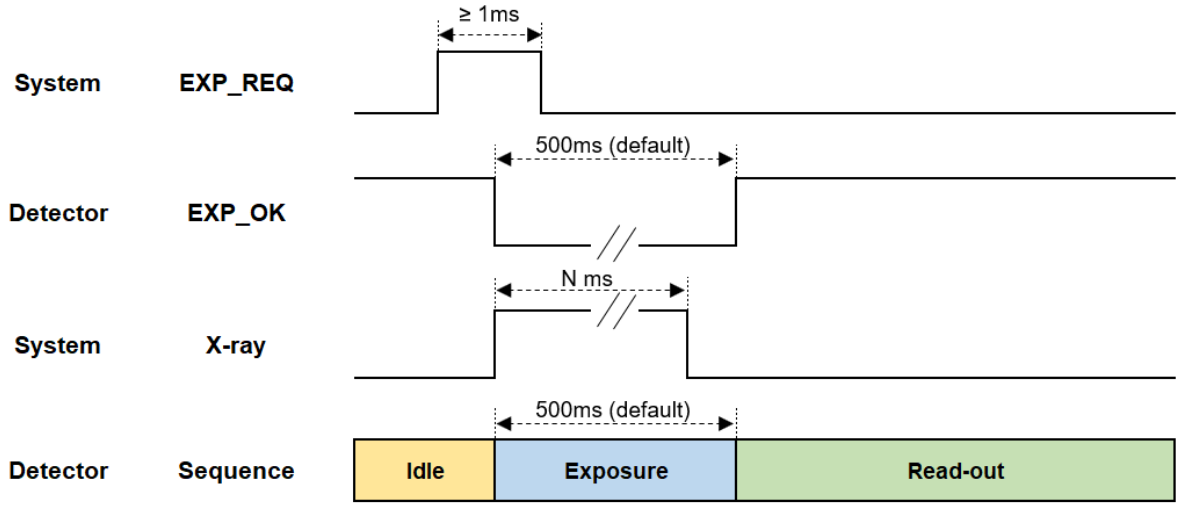

Signal Processing Order

1 Detector receives **EXP_REQ** signal from the generator.
2 Detector sends **EXP_OK** signal to the X-ray generator once it is ready for image acquisition.
3 X-ray generator exposes X-ray after checking the **EXP_OK** signal
4 Detector sends the image data after image acquisition.

- The default X-ray exposure time set in the detector is 500ms and can be changed by the user's settings.

- N ms, which is the time that the actual X-ray is to be exposed, should be shorter than the exposure time set in the detector. Otherwise, abnormal images may be obtained.
- **EXP_REQ** should be 1ms or longer. Or, image may not be acquired.

3.8 PF Exposure Mode

PF (Pulsed Fluoroscopy), designed for tomography, is an exposure mode that supports multi-frame, a function that executes continuous shooting as many as the number designated for the frame rate. Also, it is available in the environment that a generator exposes X-ray in the form of Pulse.

- As the Radio mode is a default, the detector is automatically reset to the Radio mode when you turn on the power of the detector or stopping sleep mode.
- The PF mode is only available on Drive mode 1 or Drive mode 2.

3.8.1 AED (Auto Exposure Detection) Interface- TBD

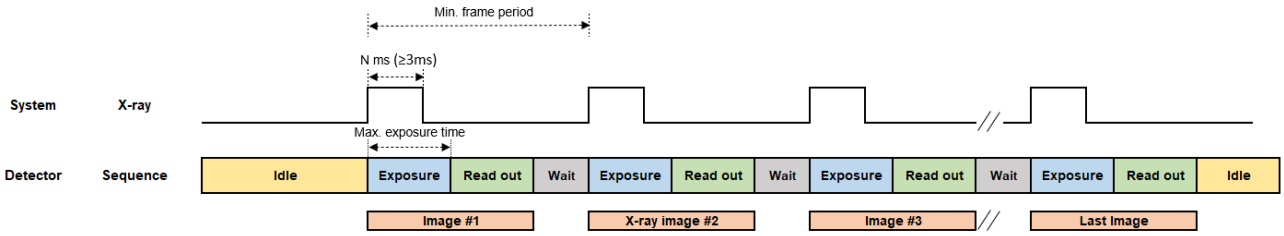

Signal Processing Order

1 X-ray generator exposes X-ray as many as the designated frame count.

2 The detector sends the image data after acquiring image.

- You should change the detector setting before exposure. Change the Drive mode to set Acquisition Mode as PF mode and Trigger Mode as AED. Also, specify the Multi-frame setting(Binning Mode, AOI Size, Frame Rate, Frame Count). The values of frame rate and frame count should not be greater than the predetermined maximum values. For more information on Multi-frame setting, refer to **VIVIX Setup Operation Manual**.

- The maximum exposure time the detector can establish is automatically measured if multi-frame setting is set. N ms, the actual time the X-ray is exposed, should be shorter than the maximum exposure time configured in the detector. Or, image acquisition may be unsuccessful.
- X-ray pulse should be exposed at frame rate configured in the detector. Or, image acquisition may be successful.
- The exposure number of X-ray pulse should be the same as the frame count. Or, it may not acquire as many as images you want to acquire, or may cause problem.
- N ms, which is the time that the actual X-ray is to be exposed, should be 3ms or less. Otherwise, the image may not be obtained.

3.8.2 Passive Interface

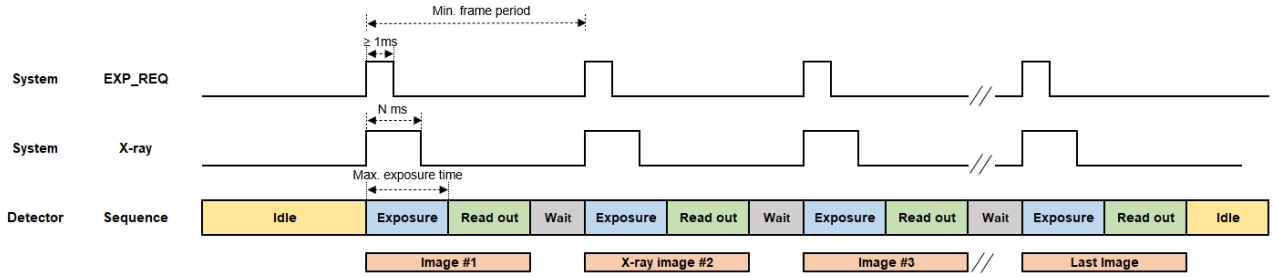

Signal Processing Order

1 X-ray generator sends **EXP_REQ** signal as many as the designated frame count to the detector and synchronizes it to expose X-ray.

2 The detector synchronizes each EXP_REQ and sends the image data after image acquisition.

	• You should change the detector setting before exposure. Change the Drive mode to set Acquisition Mode as PF mode and Trigger Mode as AED. Also, specify the Multi-frame setting(Binning Mode, AOI Size, Frame Rate, Frame Count). The values of frame rate and frame count should not be greater than the predetermined maximum values. For more information on Multi-frame setting, refer to **VIVIX Setup Operation Manual**.

	• The maximum exposure time the detector can establish is automatically measured if multi-frame setting is set. N ms, the actual time the X-ray is exposed, should be shorter than the maximum exposure time configured in the detector. Or, image acquisition may be unsuccessful. • X-ray pulse should be exposed at frame rate configured in the detector. Or, image acquisition may be successful. • The exposure number of X-ray pulse should be the same as the frame count. Or, it may not acquire as many as images you want to acquire, or may cause problem. • **EX_REQ** should be 1ms or more. Or, image acquisition may not be successful.

3.8.3 DR Trigger Interface

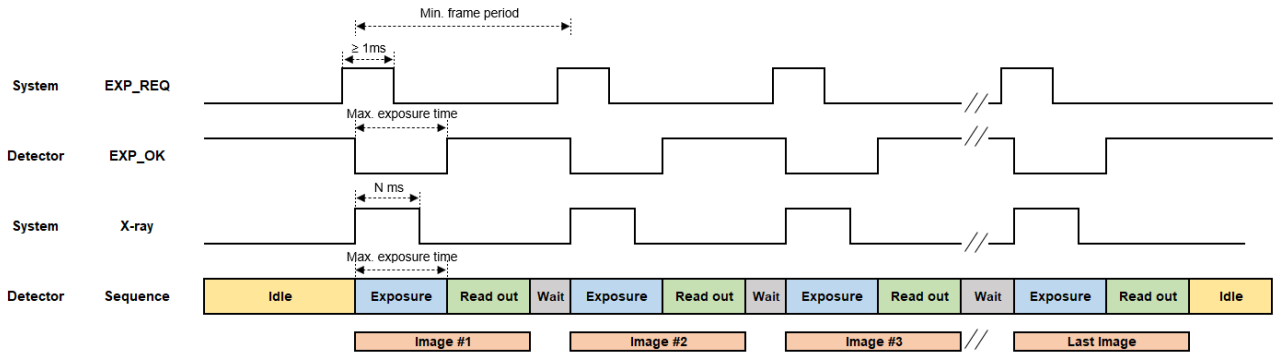

Signal Processing Order

1 X-ray generator sends **EXP_REQ** signal as many as the designated frame count to the detector and synchronizes it to expose X-ray.

2 The detector synchronizes each **EXP_REQ** and sends the **EXP_OK** signal to the detector.

3 X-ray generator exposes X-ray after checking the **EXP_OK** signal, while the detector sends the image data after image acquisition.

- You should change the detector setting before exposure. Change the Drive mode to set Acquisition Mode as PF mode and Trigger Mode as AED. Also, specify the Multi-frame setting(Binning Mode, AOI Size, Frame Rate, Frame Count). The values of frame rate and frame count should not be greater than the predetermined maximum values. For more information on Multi-frame setting, refer to **VIVIX Setup Operation Manual**.

- The maximum exposure time the detector can establish is automatically measured if multi-frame setting is set. N ms, the actual time the X-ray is exposed, should be shorter than the maximum exposure time configured in the detector. Or, image acquisition may be unsuccessful.
- X-ray pulse should be exposed at frame rate configured in the detector. Or, image acquisition may be successful.
- The exposure number of X-ray pulse should be the same as the frame count. Or, it may not acquire as many as images you want to acquire, or may cause problem.
- **EX_REQ** should be 1ms or more. Or, image acquisition may not be successful.

3.9 AED Interface of Continuous Fluro Exposure Mode

CF(Continuous Fluoroscopy), designed for Tomography, is an exposure mode that supports Multi-frame, a function that executes continuous shooting as many as the number designated for the frame rate. Also, it is available in the environment that a generator exposes X-ray in the form of Pulse. The Radio mode is a default; the detector is automatically reset to the Radio mode when you turn on the power of the detector previously configured to other modes or stopping sleep mode. The PF mode is only available on Drive mode 1 or 2.

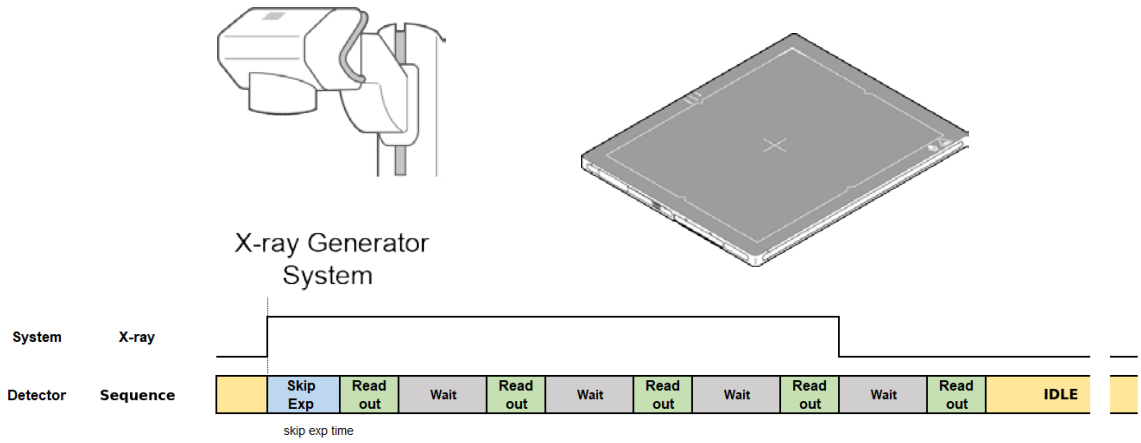

3.9.1 AED (Auto Exposure Detection) Interface

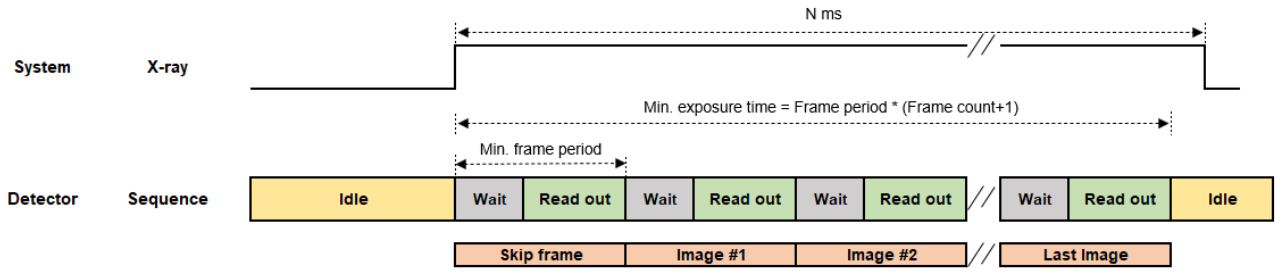

Signal Processing Order

1 X-ray generator exposes X-ray.

2 The detector automatically detects X-ray, and acquires images as many as the designated frame count designated as frame rate.

- You should change the detector setting before exposure. Change the Drive mode to set Acquisition Mode as PF mode and Trigger Mode as AED. Also, specify the Multi-frame setting(Binning Mode, AOI Size, Frame Rate, Frame Count). The values of frame rate and frame count should not be greater than the predetermined maximum values. For more information on Multi-frame setting, refer to **VIVIX Setup Operation Manual**.
- The first page is not countable. Therefore, set the Skip Frame Count as 1, and exclude the first page.

- The minimum exposure time of the detector can be acquired by multiplying Frame period by Frame count. N ms, the actual time the X-ray is exposed, should be shorter than the maximum exposure time configured in the detector. Or, image acquisition may be unsuccessful.
- N ms, which is the time that the actual X-ray is to be exposed, should be 3ms or less. Otherwise, the image may not be obtained.

3.9.2 Passive Interface

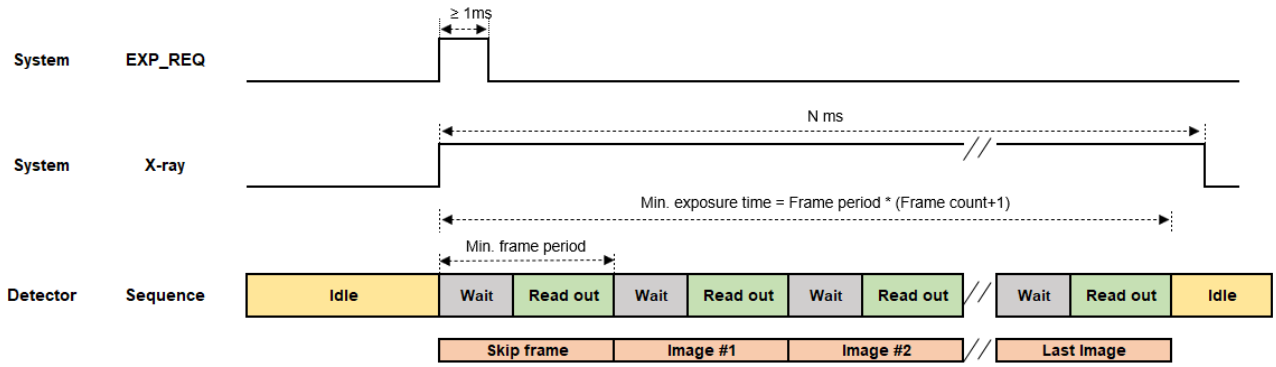

Signal Processing Order

1 X-ray generator sends **EXP_REQ** signal to the detector and exposes X-ray.

2 The detector synchronizes each EXP_REQ and sends the image data after acquiring images as many as the designated frame count designated as frame rate.

- You should change the detector setting before exposure. Change the Drive mode to set Acquisition Mode as PF mode and Trigger Mode as AED. Also, specify the Multi-frame setting(Binning Mode, AOI Size, Frame Rate, Frame Count). The values of frame rate and frame count should not be greater than the predetermined maximum values. For more information on Multi-frame setting, refer to **VIVIX Setup Operation Manual**.
- The first page is not countable. Therefore, set the Skip Frame Count as 1, and exclude the first page.

- The minimum exposure time of the detector can be acquired by multiplying Frame period by Frame count. N ms, the actual time the X-ray is exposed, should be shorter than the maximum exposure time configured in the detector. Or, image acquisition may be unsuccessful.
- **EX_REQ** should be 1ms or more. Or, image acquisition may not be successful.

3.9.3 DR Trigger Interface

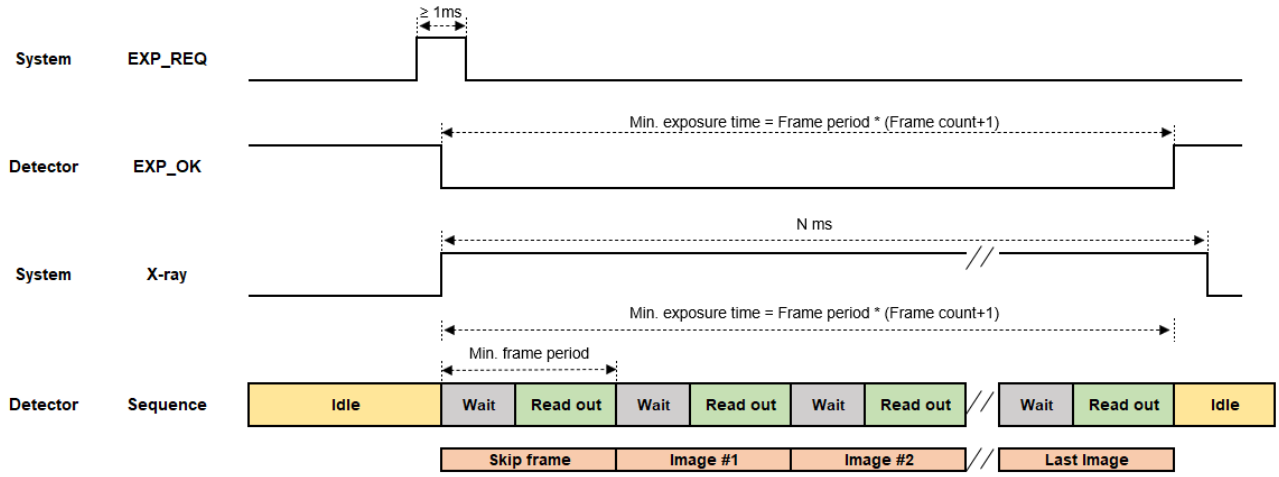

Signal Processing Order

1 The detector receives EXP_REQ signal from the X-ray generator.

2 The detector sends EXP_OK signal to X-ray generator once it is ready for image acquisition.

3 X-ray detector detects EXP_OK signal and exposes X-ray.

4 The detector acquires the images as many as the designated frame count specified as frame rate and sends the image data.

5

- You should change the detector setting before exposure. Change the Drive mode to set Acquisition Mode as PF mode and Trigger Mode as AED. Also, specify the Multi-frame setting(Binning Mode, AOI Size, Frame Rate, Frame Count). The values of frame rate and frame count should not be greater than the predetermined maximum values. For more information on Multi-frame setting, refer to **VIVIX Setup Operation Manual**.
- The first page is not countable. Therefore, set the Skip Frame Count as 1, and exclude the first page.

- The minimum exposure time of the detector can be acquired by multiplying Frame period by Frame count. N ms, the actual time the X-ray is exposed, should be shorter than the maximum exposure time configured in the detector. Or, image acquisition may be unsuccessful.
- **EX_REQ** should be 1ms or more. Or, image acquisition may not be successful.

4. Settings

This section gives information about the way of installation, setting, and diagnosis to use a detector with SCU.

Product Installation

Device Setting

Diagnosis of Devices

4.1 Product Installation

- This equipment should be installed by a service personnel authorized by Vieworks.
- This equipment must only be connected to the power with protective earth.

4.1.1 Connecting SCU mini (FXRS-04A)

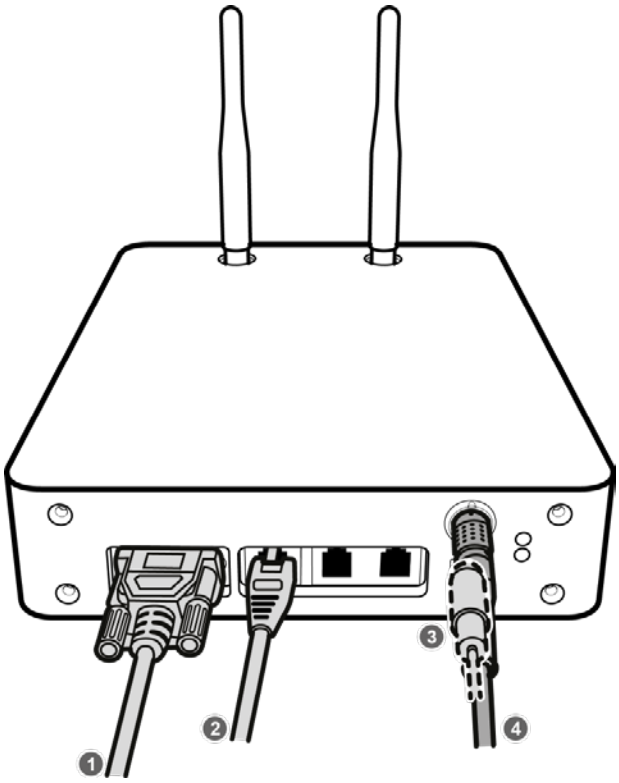

1 If you use the **DR Trigger** interface, connect the one end of generator interface cable to the **EXT_INF** port of SCU, and the other to the X-ray generator.

- If you use the AED interface, a generator interface cable is not needed as the detector operates by detecting X-ray automatically.

2 Connect one end of the LAN cable to one of the LAN ports of SCU mini, and the other to the LAN Card Connector of workstation assigned for data transfer. Stand the wireless antenna of SCU mini upright.

3 When using wired connection method, connect one end of the VW tethered-interface cable to the detector, the other end to the SCU mini port. The tether interface cable can be connected to the detector in any direction.

- When using wireless communications, there is no need to wire the tethered interface cable.
- When connecting the tethered interface cable to the detector, it is magnetically fixed.

- Make sure to use the VW tethered interface cable for SCU Mini, and FW tethered interface cable for SCU Multi. Or, the connector may be damaged.

4 To supply power, connect the AC-DC adaptor to the DC power input port of SCU mini.

4.1.2 Booting SCU mini (FXRS-04A)

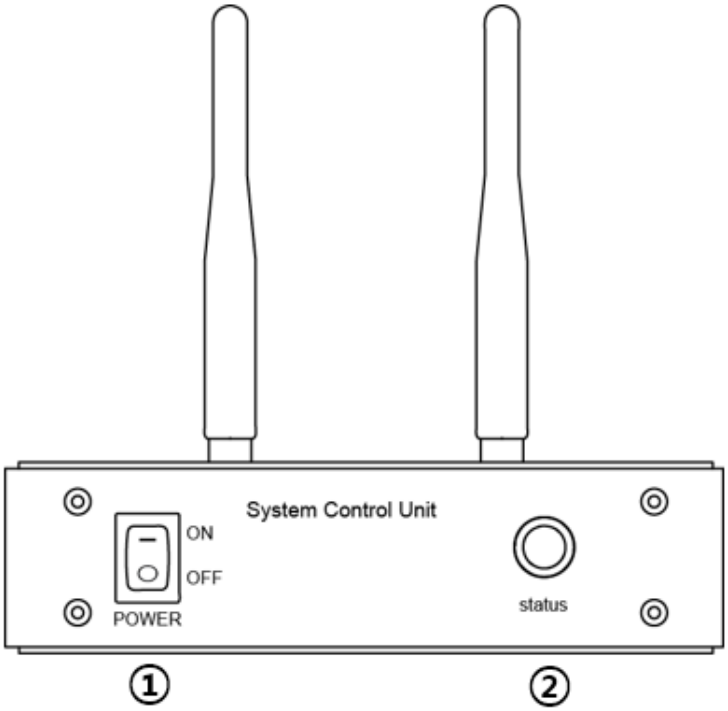

1 Turn on the power switch on the front of the SCU mini. (ON).
2 Make sure the status LED is lit green.

- When the status LED is blinking green, it means power is applied and SCU is booting up.
- When the status LED is lit green, it means the SCU boot is complete.

4.1.3 Connecting SCU Multi (FXRP-03A)

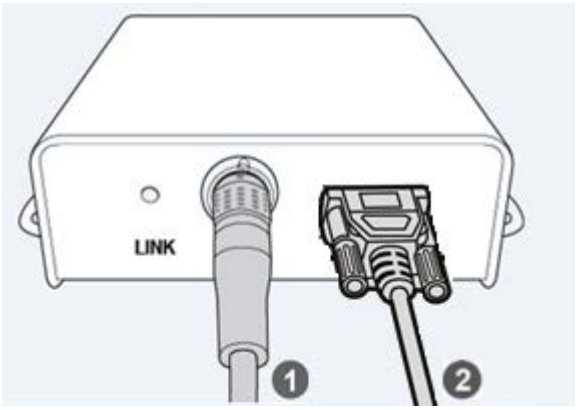

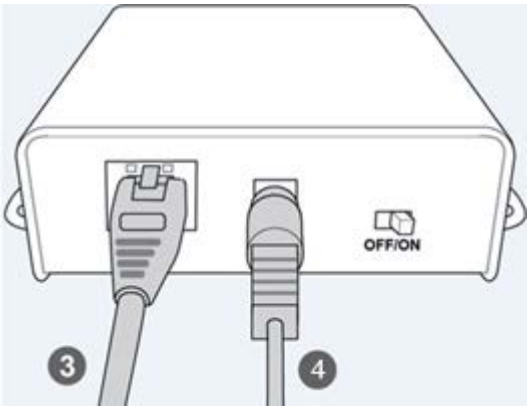

1 Connect one end of the FW tethered-interface cable to the detector and connect the other end to **PoE port** of SCU Multi.

- The FW tethered interface cable can be connected to the detector in any direction.

	• When connecting the tethered interface cable to the detector, it is magnetically fixed.

	• Make sure to use the VW tethered interface cable for SCU Mini, and FW tethered interface cable for SCU Multi. Or, the connector may be damaged.

2 When using **DR Trigger** or **Passive Trigger** interface, connect the one end of the generator interface cable to the **GEN-INF** port of SCU Multi and the other end to the X-ray generator.

	• When using the AED mode, the detector automatically detects X-ray, and there is no need to wire the generator interface cable.

3 Connect one end of the LAN cable to the LAN port on the SCU Lite and the other end to the LAN port for data transfer on the workstation.

4 Connect the AC-DC power adaptor to the power input port of SCU Lite.

4.1.4 Booting Up SCU Multi (FXRP-03A)

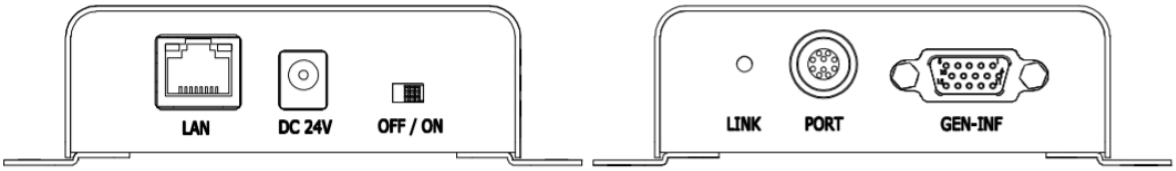

1 Turn on the power switch at rear side of SCU Multi (ON).

2 If you connect a detector to SCU Multi by wire, check if the LINK LED of SCU Lite lights up green.

- When the LINK LED lights up green, the detector and SCU are wired at 1Gbps.
- When the LINK LED lights up yellow, the detector and SCU are wired at 100 Mbps.

4.1.5 Booting up the Detector

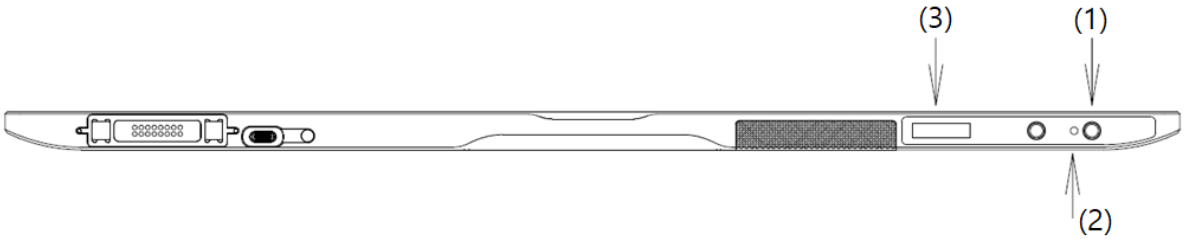

1 Press the power button on the detector for about 1 second. If the predetermined value of the Power Control among detector settings is set to "By SCU," the detector automatically starts booting, and you do not have to press the power button.

2 Check that the detector's power LED is lit green.

3 Check the battery status (remaining, charged) and communication connection status (wired / wireless, detector AP / STATION, wireless connection strength, etc.) on the detector's OLED display.

- If the power LED flashes green, power is applied, and the detector is booting up.
- When the power indicator LED is lit green, the detector has finished booting.
- If you press and hold the power button for about 3 seconds, the power indicator LED and the OLED display turn off, then the system is powered off. However, the battery pack can be charged when the SCU is powered via a tether interface cable or an AC-DC adapter is attached.
- If Power Control is set to By SCU and wired-power(SCU or AC-DC Adaptor) is removed, the system power is automatically turned off.
- For more information on Power Control setting, refer to **VIVIX Setup Operation Manual**.

4.1.6 Installing Wireless Power Transmitter (FXRC-05A)

How to install the FXRC-05A in the detector

- Alignment between equipment: Wireless power transmission antennas in the wireless power transmitter and in the detector should bring into a line. Also, the infrared LED of the detector should be aligned with the infrared optic acquisition of the wireless power transmitter. The range of misalignment between 2 equipment should be up to 5mm.
- Separation distance between equipment: Wireless power transmitter and the detector should be positioned close together but should not be in contact with each other. The separation distance between these two equipment should be between 1mm and 3mm.
- Equipment materials: Wireless power transmitter uses magnetic induction and infrared interface. Therefore, it should have the material that magnetic field and infrared rays can pass through. Excluding the fixing hole, it is recommended to form layer of air or use plastic, which infrared ray can well pass through, as a material.

⚠	• If there is misalignment between equipment, the wireless power transmitter becomes less efficient, and heat increases. If misalignment between 2 equipment goes beyond permissible range(≤5mm), the successful power transmission is not guaranteed. • The further the separation distance between equipment, the less efficient the wireless power transmission and the greater the heat. If the separation distance is farther than the permissible range(≤3mm), successful power transmission is not guaranteed. • If two equipment are in contact with each other, the exterior of the wireless power transmitter may be damaged due to the friction with the detector. Make sure these 2 equipment are not in contact. • If the infrared interface between 2 equipment does not work well, the detector cannot control the wireless power transmitter. Abnormal operation of wireless power transmitter may result in unsuccessful image acquisition.

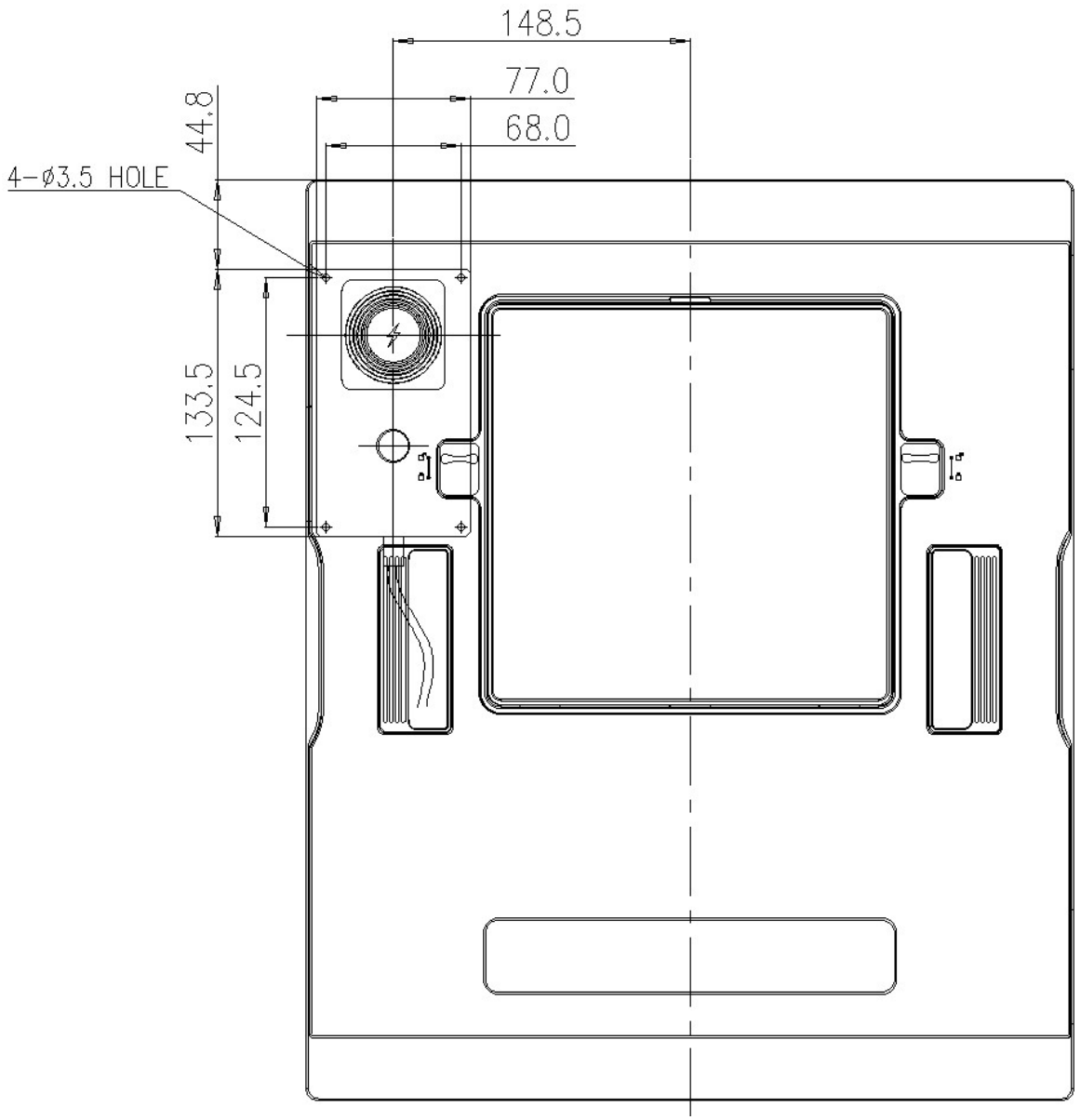

<Alignment between FXRD-3643FAW and FXRC-05A>

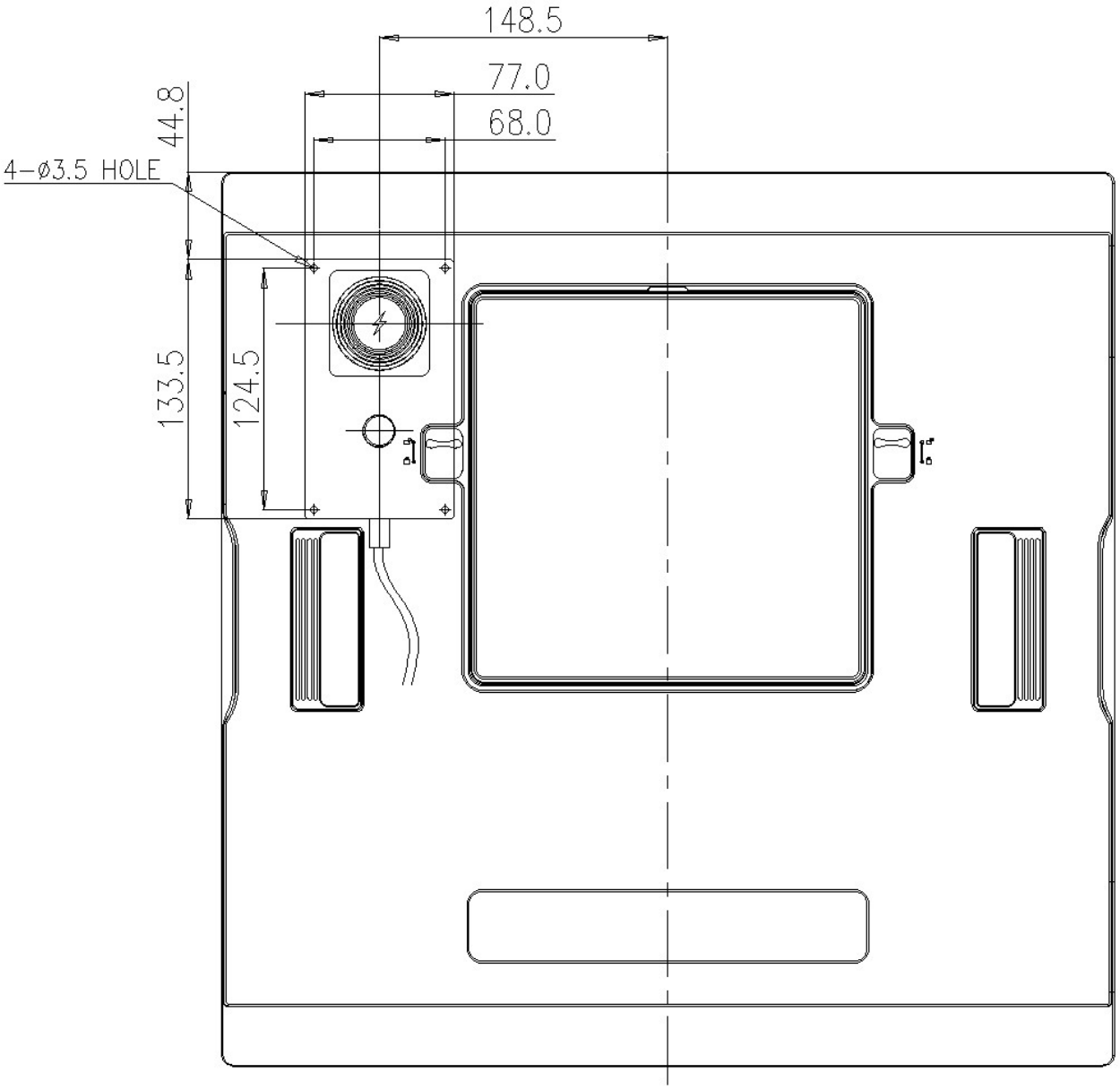

<Alignment between FXRD-4343FAW and FXRC-05A>

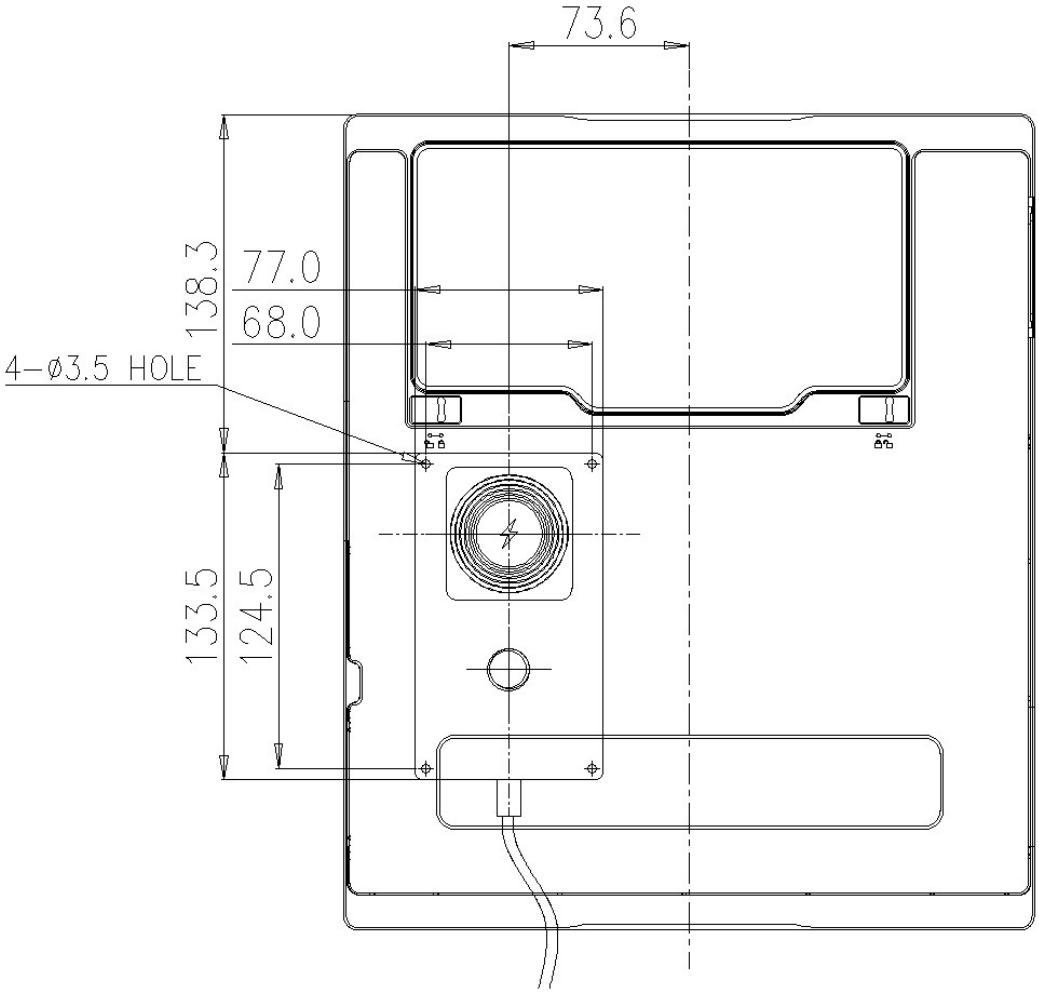

<Alignment between FXRD-2530FAW and FXRC-05A>

4.2 Device Setting

4.2.1 Software Installation

1 After connecting all devices, prepare the following software to set, calibrate and operate the detector / SCU.

Software	Description
VIVIX Device Driver (VDD)	Image filter driver for acquiring images from a detector.
VIVIX Setup	A program for setting and managing the detector / SCU.

2 Install **VIVIX Device Driver** and **VIVIX Setup** in sequence.

- It is not necessary to install **VIVIX Device Driver** and **VIVIX Setup** separately in case of installing the **VXvue** program made by Vieworks.

3 Configure environment for the workstation.

- For more details in software installation and usage environment setting of Workstation, refer to **VIVIX Setup Operation Manual**.

4.2.2 Setting Detector and SCU

1 After executing **VIVIX Setup**, access to the detector and SCU to set each device properly.
2 Perform detector calibration to acquire images suitable for the installation environment.
3 Take radiographic images to check if the shooting is conducted normally.

- The device setting should be done by an engineer who understands the **VIVIX Setup**, Windows system, wired/wireless network and the related technique. If not, an error could occur while operating the detector, or the image quality could be affected.

4.3 Diagnosis of Devices

Execute the **VIVIX Setup** program to check if there is any problem to operate the detector / SCU after installing and setting devices.

Diagnosis Items

Items	Description
Image	Diagnoses the acquired images.
Battery Pack	Diagnoses the condition of a battery pack.
Wired/Wireless Communication Status	Diagnoses the status of wired/wireless communication.
Wired/Wireless Communication Speed	Diagnoses the speed of wired/wireless communication.
Self-diagnosis	Diagnoses defects of a detector by self-diagnosis.

- Set the devices and perform calibration again if any problem is found during the diagnosis. Contact the person in charge of service if the problem is not corrected.

4.3.1 Diagnosing Images

1 Execute **VIVIX Setup** and move to the **Image** dialog.
2 Take an image and check if it has any problem.
3 Take a dark image and check if it has any problem.
4 Check the effective area and whole area of the image.

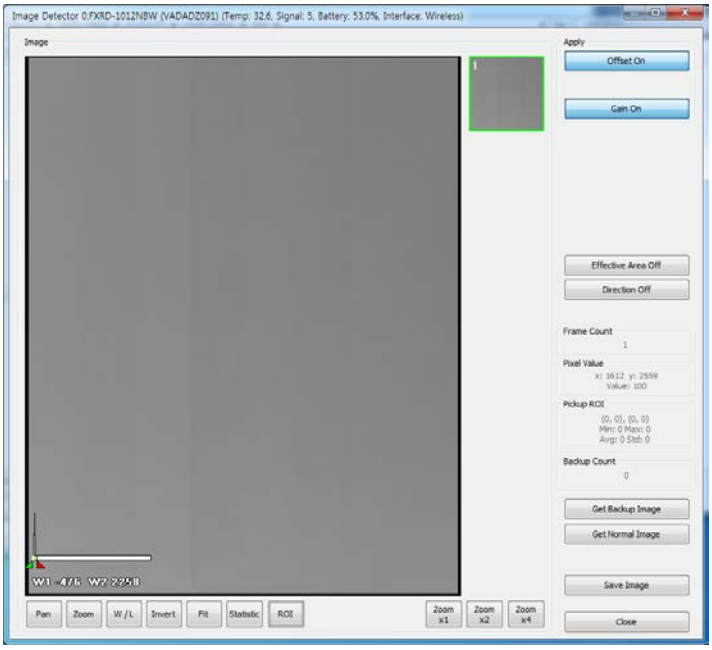

- Refer to **VIVIX Setup Operation Manual** for the detailed information about the image diagnosis.

- If any problem is found on the image, check if it is caused by the surrounding environment and calibrate the detector again. Contact the person in charge of Vieworks if the problem is caused by the performance of a detector.

4.3.2 Diagnosing Battery Pack

Check from OLED display of the detector

1 Check the mounting status / charging status of a battery, and battery levels on the OLED display.

Icon	Description
	No battery pack, Battery capacity is less than 5%
	Charging (Battery capacity changes depending on remaining charge.)
	Charging complete or discharged. (Battery capacity changes depending on remaining charge.)

Check the charge status of detector with charge status LED

LED Status	Description
Off	No charging power
Lights up orange	Charging
Lights up green	Charging completed

Check from VIVIX Setup

1 Execute **VIVIX Setup** and go to the **Maintenance** tab of the **Detector Maintenance** dialog.

2 Check the mounting status, charging status and remains of a battery.

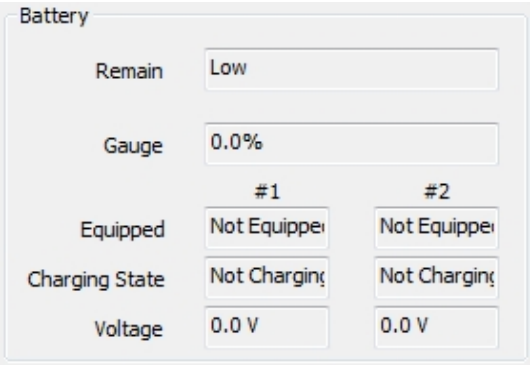

- You can also check the battery remains from **VXvue** or **VIVIX SDK**.
- Refer to **VIVIX Setup Operation Manual** for the information about the battery diagnosis.

- Since a battery pack is consumables which performance will be decreased as time passes, make sure to check its life when you use it. If a battery pack has any problems, consult service personnel in Vieworks.

⚠	• If the battery remains under 2.5%, the system warns low battery and the detector will be turned off automatically after the battery is consumed for a specific period of time. Therefore, it is recommended to change the battery when a warning message or an indicator displays.

4.3.3 Diagnosing Communication Status

Checking on the OLED display of the detector

1 Check the detector communication status on the initial screen of OLED display.

Classification	Item	Icon	Description
Battery	Battery symbol		No battery packs. Battery capacity is less than 5%.
	Charging symbol		Charging (Battery capacity changes depending on remaining charge.)
	Battery level		Charging complete or discharged. (Battery capacity changes depending on remaining charge.)
Communication	AP (Wireless)		Operates in AP Mode
	STATION (Wireless)		Preset identifier (default is 'Sy' if not using preset switching function)
			Level 5 (Link Quality: 66~70, Very Good)
			Level 4 (Link Quality: 56~65, Good)
			Level 3 (Link Quality: 41~55, Normal)
			Level 2 (Link Quality: 31~40, Bad)
			Level 1 (Link Quality: 1~30, Very Bad)
			Level 0 (Link Quality: 0, Unknown)
	Tether Interface (Wired)		Operates in tether interface mode (connected at 1Gbps)
			Operates in tether interface mode (connected below 100Mbps)
System Power	Sleep Mode		Enters sleep mode

2 On the initial display of the OLED display, pressing the power button or AP button for about 1 second will switch the OLED display to the second screen. On the second screen, check the IP address of the detector.

Classification	Item	Display	Description
Communication	**IP address**	000.000.000.000	Detector IP address

3 If you press the power button or AP button on the second screen of the OLED display for about 1 second, the OLED display will switch to the third screen. On the third screen, check the SSID information of the detector that is important for wireless connection.

Classification	Item	Display	Description
Communication	**SSID**	VVVVVVVVVV...	Displays SSID of the detector's current state (AP or STATION)

4 During certain operations, the OLED display shows the operating status as follows:

Classification	Display	Description
Operating Status	Start	Detector booting up
	Wake up	Deactivating the detector sleep mode
	Acq image	Acquiring images
	Save image	Saving images in the detector
	Send image	Sending images
	AP Mode Start	Switching to detector AP mode (AP button function: Detector AP/STA)
	STA Mode Start	Switching to detector station mode (AP button function: Detector AP/STA)
	Reset WLAN	Initializing wireless setting information
	Sync WLAN	Syncing wireless information with connected SCU
	AP scan	Scanning for nearby AP (AP button function: Preset switching)
	Change AP	Changing external AP (AP button function: Preset switching)

5 If a detector error is detected, an error number is displayed on the OLED initial screen. Pressing the power button or AP button for about 1 second while the error screen is displayed will switch to the screen showing the battery and communication status.

Classification	Display	Description
Error Status	ERR_00	Cause: FPGA error Expected malfunction: Failed image acquisition or acquired abnormal image
	ERR_01	Cause: ROIC error

		Expected malfunction: Failed image acquisition or acquired abnormal image
	ERR_02	Cause: Gate IC error Expected malfunction: Image acquisition failure or acquired abnormal image
	ERR_03	Cause: AED sensor error Expected malfunction: Image acquisition failed in AED mode
	ERR_04	Cause: Internal power failure Expected malfunction: Unintentional power off, failed image acquisition
	ERR_05	Cause: Battery count error Expected malfunction: Battery capacity indication error

Check communication status in VIVIX Setup

Wired Communication

1 Connect the detector with a cable.
2 Execute **VIVIX Setup** and go to the **Maintenance** tab of the **Detector Maintenance** window.
3 Check the status of wireless communication from the **Network** item.

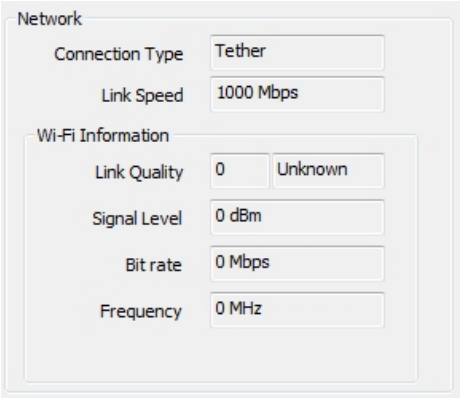

Wireless Communication

1 Connect the detector wirelessly.
2 Execute **VIVIX Setup** and go to the **Maintenance** tab of the **Detector Maintenance** window.
3 Check the status of wireless communication from the **Network** item.

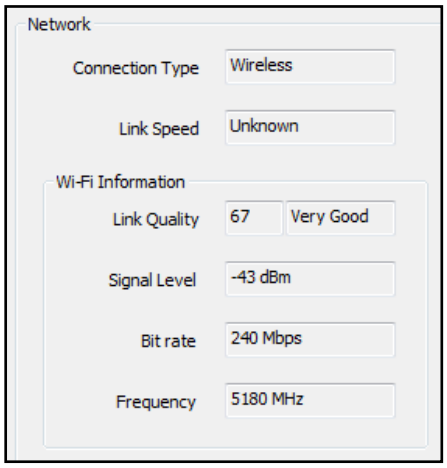

- You can also check the communication status from **VXvue** or **VIVIX SDK**.
- Refer to **VIVIX Setup Operation Manual** for the detailed information about the wireless communication diagnosis.

- The communication cannot run smoothly when the strength of wireless communication is under the level 2. Therefore, it is required to check the surrounding wireless communication status.

- In case of using the detector under wireless communication, be sure to check the communication status before starting to use the detector. If the status is bad, the speed of acquiring images will be very slow or you may fail to acquire images.
- Be sure to check the surrounding wireless communication to prevent communication interference. If wireless communication module in the detector has any problems, contact the service engineer in Vieworks.

4.3.4 Diagnosing Communication Speed

1 Execute **VIVIX Setup** and go to the **Maintenance** tab of the **Detector Maintenance** dialog.
2 Click on the **Download** button in **Image Transmission Time** and check image transmission speed of the detector.
3 Click on the **Start** button in **Throughput Measurement** to check the data traffic per setting time.

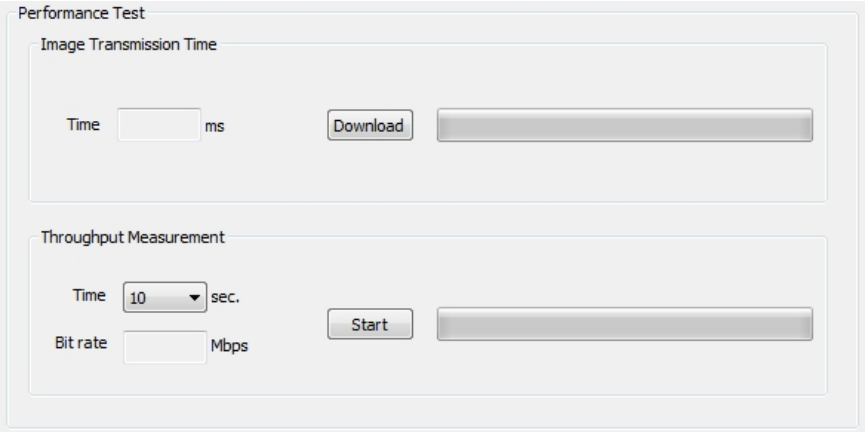

- Refer to **VIVIX Setup Operation Manual** for the detailed information about the communication speed diagnosis.

- Be sure to check the communication environment if there is any problem occurs in the communication speed. Contact the person in charge of service if the problem is related to the communication module of a detector and SCU.

4.3.5 Self-Diagnosis

1 Execute **VIVIX Setup** and go to the **Self Diagnosis** tab in the **Detector Maintenance** dialog.
2 Check the desired items to diagnose from the **Test Case** list.
3 Click on the **Execute** button to perform self-diagnosis.
4 Check the status and result of diagnosis for each item in the **Result** dialog.

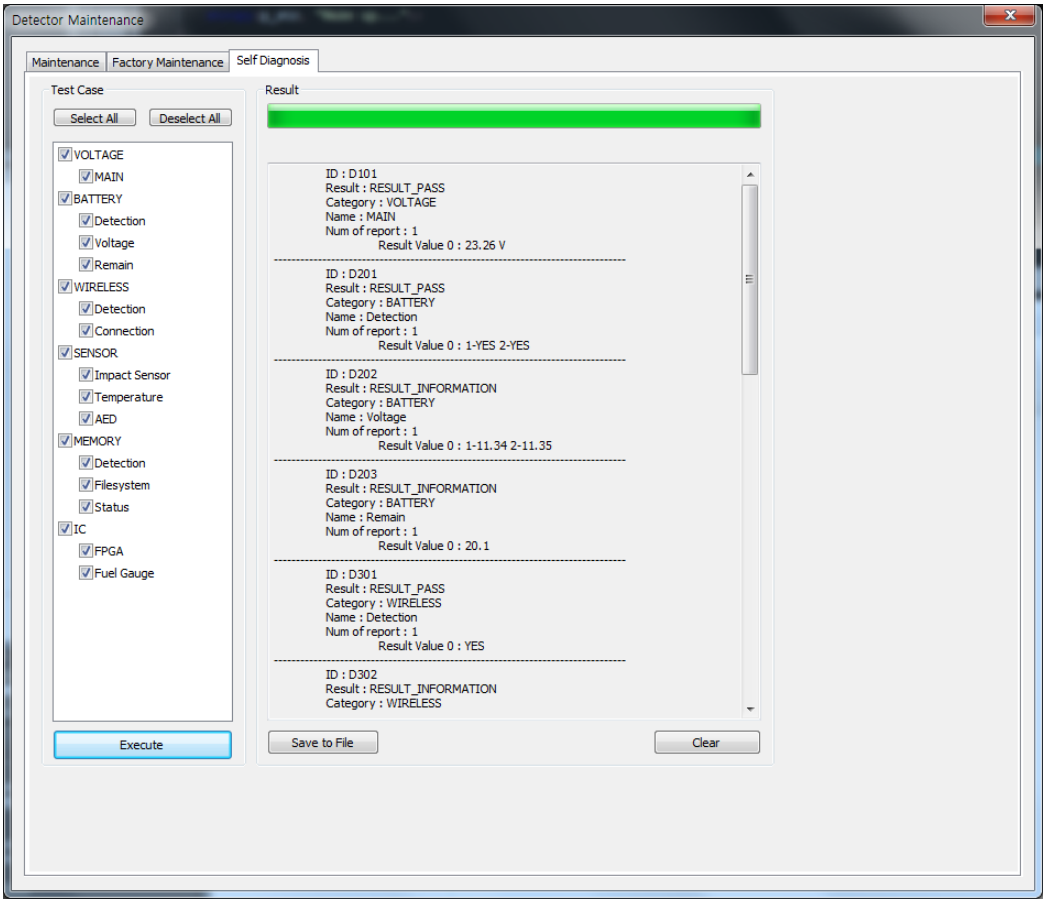

- Click the **Save to File** button to save the result of a diagnosis as a file and contact the service engineer if any problem is found.

Self-diagnosis items of detector and measures

Voltage

Item	Form	Expected problem	Measures
MAIN	Decision	Problem with input power	Replace the battery pack.
			Replace the tether interface cable.
			Replace AC-DC adapter.
			Replace wireless power transmitter
		Problem with system power	Contact a service engineer.

Battery

Item	Form	Expected problem	Measures
Detection	Decision	The battery is not attached.	Check if a battery is attached or not.
		A defective circuit is connected to a battery pack.	Contact a service engineer.
Voltage	Information	N/A	N/A
Remain	Information	N/A	N/A

Wired

Item	Form	Expected problem	Measures
Detection	Decision	Defective ethernet PHY	Contact a service engineer.
Connection	Decision	The cable is connected incorrectly.	Reconnect the tether interface cable.
		Defective cable	Replace the tether interface cable.
		Defective ethernet PHY	Contact a service engineer.

Wireless

Item	Form	Expected problem	Measures
Detection	Decision	Defective wireless module	Contact a service engineer.
Connection	Decision	Inconsistent environment of the wireless communication.	Check wireless communication environment.
		Defective wireless module	Contact a service engineer.

Sensor

Item	Form	Expected problem	Measures
Impact Sensor	Decision	Defective shock sensor	Contact a service engineer.
Temperature	Decision	Defective temperature sensor	Contact a service engineer.
AED	Decision	Defective AED sensor	Contact a service engineer.

Memory

Item	Form	Expected problem	Measures
Detection	Decision	Impossible to save backup images.	Contact a service engineer.
		Impossible to save logs.	Contact a service engineer.
		The calibration data is inapplicable.	Contact a service engineer.
File system	Decision	Impossible to save backup images.	Contact a service engineer.
		Impossible to save logs.	Contact a service engineer.
Status	Information	N/A	N/A

IC

Item	Form	Expected problem	Measures
FPGA	Decision	Impossible to take images from a detector.	Contact a service engineer.
Fuel Gauge	Decision	Impossible to check the remaining of a battery pack.	Contact a service engineer.

Self-diagnosis items of SCU and measures

Wired

항목	Form	Expected problem	Measures
Detection	Decision	Defective ethernet PHY	Contact a service engineer.

Wireless

Item	Form	Expected problem	Measures
Detection	Decision	Defective wireless module	Contact a service engineer.

Memory

Item	Form	Expected problem	Measures
Detection	Decision	Impossible to save logs.	Contact a service engineer.
File system	Decision	Impossible to save logs.	Contact a service engineer.
Status	Information	N/A	N/A

IC

Item	Form	Expected problem	Measures
Switching IC	Decision	Impossible to connect the detector and PC.	Contact a service engineer.
Current Controller	Decision	Impossible to block overcurrent when using the wired mode.	Contact a service engineer.

5. Maintenance

This section gives information about maintenance of the product.

Product Initialization

Detector Power Saving Function

5.1 Product Initialization

If connection status of the system is not stable or setting value is not correct, you can initialize the products.

5.1.1 SCU Initialization

1 Click on the **Configuration** button of SCU after running the **VIVIX Setup** program.
2 Click on the **Factory Reset** button in the **Configuration** dialogue.
3 Wait for SCU to be initialized and rebooted automatically.
4 Make sure the SCU is initialized.

Default value of SCU initialization

Item		Default Value
Network		
	IP Address	169.254.2.100
	Subnet Mask	255.255.0.0
	Gateway	169.254.2.100
AP		
	AP On/Off	ON
	Frequency	5㎓
	Country	KR
	Band	40㎒
	Channel	+36
	SSID	vivix
	Key	1234567890
Trigger		
	Method	Packet
	Polarity	Auto

5.1.2 Detector Initialization

1 Click the **Maintenance** button after executing the **VIVIX Setup** program.
2 Go to **Maintenance** window > **Maintenance** tab and click the **Factory Reset** button.
3 Wait for the detector until it is rebooted automatically.
4 Click the **Configuration** button and check if detector initialization is complete.

Default value of initialized detector

Item	Default Value
Network	
IP Address	169.254.1.10
Subnet Mask	255.255.0.0
Gateway	169.254.2.100
Wireless Network	
SSID	vivix
Key	1234567890
AP Button	AP switching
Wireless Only	OFF
Power Mode	
Sleep	OFF
Shut down	OFF
Power Control	By Detector
AP	
Enable	OFF
Frequency	5㎓
Country	KR
Band	40㎒
Channel	+36
SSID	vivix_ap
Key	1234567890
Image Acquisition	
Exposure Mode	AED
Auto Offset Refresh Setting	
Use offset refresh	Uncheck
Time Interval	30Min
Temperature Interval	3℃
Number of shot	5
Image Transmission	
Timeout	20sec
Option	None

5.1.3 Wireless Initialization of Detector

1 Connect the detector wirelessly without connecting the tether interface cable.
2 Press and hold both the power button and AP button over 3 seconds.
3 Initialization will be conducted when the green LED is flickering. After that, the detector will reboot automatically.
4 When booting is complete, make sure the detector is initialized.

Default value of initialized wireless

Item	Default Value
Network	
IP Address	169.254.1.10
Subnet Mask	255.255.0.0
Gateway	169.254.2.100
Wireless Network	
SSID	vivix
Key	1234567890
AP Button	AP switching
Wireless Only	OFF
AP	
Enable	OFF
Frequency	5㎓
Country	KR
Band	40㎒
Channel	+36
SSID	vivix_ap
Key	1234567890

- When you process wireless initialization of a detector, only the detector's network information is reset to the default value.

5.2 Detector Power Saving Function

You can extend the battery life by using the power saving function of the detector.

- This function works only when the battery is supplied power to the system. In other words, the power saving function does not work when the power is supplied from the SCU through the tether interface cable or from the AC-DC adapter.

Types of Power Save Mode

Item	Description
Normal	The detector can be operated and can take images at any time.
Sleep	The detector cannot be operated. User can take an image by disabling the sleep mode.
Shut Down	The detector has been turned off. User can take an image after the detector is rebooted.

Setting Items of Power Saving Function

Item	Description
Sleep	Sets whether you use the sleep mode of the detector or not. • If the detector is not used for the set time, it switches to Sleep mode if the Sleep function is set. (**Off / After 10min / After 15min / After 20min / After 25min / After 30min**)
Shut Down	Sets whether you use the shut-down function of the detector or not. • If the detector is not used during the set time, the detector is turned off. (**Off / After 30min / After 60min / After 90min / After 120min**)

- Refer to **VIVIX Setup Operation Manual** for the detailed information about the power save mode.

Entry Condition of Power Saving Mode

Item	Description
Normal	-
Sleep	The detector turns to sleep mode if not used for the setting time.
Shut Down	The detector is turned off if not used for the setting time under the sleep mode. If the Sleep function is not used, the detector will shut down if it is not used for a set time.

Checking Indication in Power Saving Mode

Item	Description
Normal	The power indicator LED is on and the OLED display shows the initial screen.
Sleep	• The power indicator LED is on and the OLED display shows a sleep mode icon. • You can check the sleep status in VIVIX Setup or VXvue. • VIVIX SDK notices sleep state.
Shut Down	Power indicator LED and OLED display are off.

Shows Sleep Mode on OLED Display

Item	Icon	Description
Sleep		Enter sleep mode
Changing Settings		Canceling sleep mode

Disabling Power Save Function

Item	Description
Normal	-
Sleep	1 You can turn off the sleep state in VIVIX Setup or VXvue. 2 You can call the function for turning off the sleep state from VIVIX SDK. 3 You can cancel the sleep state by pressing the detector power button or the AP button.
Shut Down	Reboot the detector by pressing a power button on the detector.

- When using the Sleep function, make sure the detector is in Sleep mode before shooting. No image is acquired in sleep mode.
- When the detector wakes up from sleep mode, it takes about 5 seconds to wake up. Do not expose X-rays during wake-up. If X-rays are exposed during wake-up, abnormal images may be obtained.

6. Troubleshooting

6.1 Troubleshooting

6.1.1 Troubleshooting Guide

When you encounter problems while using the equipment, search for the table below for the problem or error messages and try the solutions. If the problem persists, turn off the detector and consult your sales representative or a distributor. Please refer to the details of the following symptoms or error messages.

- Troubleshooting must be performed by service engineer who is authorized by Vieworks. If an unqualified person performs troubleshooting on the system resulting in damaging the detector, software or hardware, then the Vieworks or its representative is not responsible for the detector repair regardless of remain warranty. For more detailed information, refer to <7.1 Service Information> and <7.2 Warranty>.

6.1.2 Fail to Turn the Detector On

Category	Description
Symptom	• Failed to turn the power of the detector.
Expected Causes	• The battery pack is discharged. • The battery pack is attached wrongly. • The battery pack is broken. • The detector is broken.
Solutions	1 Charge a battery pack 2 Attach a battery pack again. 3 Replace with another battery pack. 4 Replace with another detector.

6.1.3 The Power Switch of SCU or Status LED is not worked normally

Category	Description
Symptom	• The power switch of SCU is not working. • The status LED of SCU is not responding.
Expected Causes	• Problems with the connection of power cable. • Power cable is broken. • AC-DC adapter is broken. • LAN cable is broken. • SCU is broken.
Solutions	1 Check the cable connections (AC-DC adapter, power cable, LAN cable) of the SCU. 2 Turn on and off SCU. 3 Replace the power cable. 4 Replace the AC-DC adapter. 5 Replace the LAN cable. 6 Replace SCU.

6.1.4 Communication Test is failed

Category	Description
Symptom	• The communication connection fails or is lost. • A transmission error occurs, and abnormal images or data are sent.
Expected Causes	• Network connection problem • Network setting problem • PC environment setting problem • Wireless environment problem • SCU (or external AP) failure • Detector failure
Solutions	1 Check the connection of network cable between workstation and SCU (or external AP). 2 Check if the accurate network cable is used or not. (CAT 5E or 6) 3 Set the network information of workstation, SCU (or external AP) and detector again. 4 Set the workstation environment again such as firewall setting. 5 Check surrounding wireless communication environment. If there is an environment that prevents wireless communication, remove the obstacle, or change the wireless communication settings to prevent the interference. 6 Reboot the detector and SCU. 7 Replace SCU (or external AP). 8 Replace the detector.

6.1.5 There is no problem in communication connection, but no image is acquired

Category	Description
Symptom	• The image cannot be sent to PC even though the X-ray is exposed.
Expected Causes	• Problems with the generator interface • Problems with the generator interface connection • Generator interface cable failure • SCU failure • Detector failure
Solutions	1 Check the generator interface setting of the detector. (AED mode, DR Trigger mode) 2 In DR trigger mode, check the generator interface connection. 3 Replace the generator interface cable. 4 Replace the SCU. 5 Replace the detector.

6.1.6 Getting Abnormal Images

Category	Description
Symptom	• The image sent to the PC is abnormal.
Expected Causes	• Problems with calibration data • Problems with setting exposure time • Wrong operating environment • Detector failure.
Solutions	1 Perform the calibration again. 2 Make sure that the detector is set to be applied calibration data. 3 Set the exposure time to be longer than the X-ray exposure time. 4 Check the operating environment (temperature, humidity, shock, vibration, X-ray energy range). 5 Replace the detector.

6.1.7 Battery Pack or Installation Part of Battery is Getting Hot

Category	Description
Symptom	• The fully charged battery pack runs down quickly.
Expected Causes	• Reduced performance (capacity) with prolonged use of the battery pack • Using the battery pack in low or high temperature environments
Solutions	1 If the battery pack is to be used for a long time, replace it with a new battery pack. (The battery pack is a consumable.) 2 Use the battery pack at room temperature. In cold or hot environments, the battery pack's capacity decreases.

6.1.8 When an Error Number is Displayed on the OLED Display

Category	Description
Symptom	• The error number is displayed on the OLED display.
Expected Causes	• ERR_00 ~ ERR_04: Detector internal IC failure • ERR_05: Battery pack failure or insufficient battery pack
Solutions	1 ERR_00 ~ ERR_04: Replace the detector. 2 ERR_05: Check the number and status of batteries installed. If normal, replace with a new battery pack.

7. Information

This section gives overview information for service and warranty of the product.

Service Information

Warranty

Revision History

7.1 Service Information

7.1.1 Product Lifetime

The estimated product lifetime may be up to seven (7) years under the appropriate regular inspection and maintenance.

7.1.2 Regular Inspection and Maintenance

In order to ensure the safety of patients, operating personnel and third parties, and to maintain the performance and reliability of the equipment, be sure to perform regular inspection at least once a year. If necessary, clean up the equipment, make adjustments, or replace consumables.
There may be cases where overhaul is recommended depending on the conditions. Contact your sales representative or distributor for regular inspections or maintenance.

7.1.3 Repair

If a problem cannot be solved even after taking the measures indicated in Troubleshooting and contact your sales representative or a distributor for repairs. Please refer to the name label and provide the following information.

- Model name
  - **FXRD-3643FAW**
  - **FXRD-4343FAW**
  - **FXRD-2530FAW**

- Serial number
  - 9 digit-number on the product label

- Explanation of problem
  - Describe as detailed as possible.

7.1.4 Replacement Parts Support

Performance parts (parts required to maintain the functioning of the product) of this product will be stocked for seven years after discontinuance of production, to allow for repair.

7.1.5 Consumables

The following consumable can deteriorate because of its characteristics and structure. For purchase of consumables, contact your sales representative or distributor.

- Battery pack: **FXRB-04A**

7.2 Warranty

Vieworks Co., Ltd. follows the contract with each customer regarding the product warranty period. If any such product proves defective during this warranty period, Vieworks at its option, either will repair the defective product without charge for parts and labor, or will provide a replacement in exchange for the defective product. In order to obtain service under this warranty, Customer must notify Vieworks of the defect before the expiration of the warranty period and make suitable arrangements for the performance of service. Customer shall be responsible for packaging and shipping the defective product to the service center designated by Vieworks with shipping charges prepaid.

Vieworks shall pay for the return of the product to customer if the shipment is to a location within the country in which Vieworks designated service center is located. Customer shall be responsible for paying all shipping charges, duties, taxes, and any other charges for products returned to any other locations.

This warranty shall not apply to any defect, failure, or damage caused by improper or inadequate maintenance and care. Vieworks shall not be obligated to furnish service under this warranty to repair damage resulting from attempts by personnel other than Vieworks or its representatives to install, repair, or service this product, to repair damage resulting from improper use or connection to incompatible equipment or power source; or to service a product that has been modified or integrated with other products when the effect of such modification or integration increases the time or difficulty of servicing the product.

THIS WARRANTY IS GIVEN BY VIEWORKS WITH RESPECT TO THIS PRODUCT IN LIEU OF ANY OTHER WARRANTIES, EXPRESS OR IMPLIED. VIEWORKS AND ITS VENDOR DISCLAIM ANY IMPLIED WARRANTIES OF MERCHANTABLILITY OR FITNESS FOR A PARTICULAR PURPOSE. VIEWORKS RESPONSIBILITY TO REPAIR OR REPLACE DEFECTIVE PRODUCTS IS THE SOLE REMEDY PROVIDED TO THE CUSTOMER FOR BREACH OF THIS WARRANTY. VIEWORKS AND ITS VENDORS WILL NOT BE LIABLE FOR ANY INDIRECT, SPECIAL, INCIDENTAL, OR CONSEQUENTIAL DAMAGES IRRESPECTIVE OF WHETHER VIEWORKS OR THE VENDOR HAS ADVANCE NOTICE OF THE POSSIBILITY OF SUCH DAMAGES.

There are no warranties which extend beyond the description mentioned in this document

European Union

This product can be used in which EU members, in accordance with Article 10(10) /
or this product can be used in at least one EU country, in accordance with Article 10(2).

FCC Instrunctions

FCC Compliance Statement

This device complies with part 15 of the FCC rules. Operation is subject to the following two conditions:

(1) This device may not cause harmful interference, and (2) this device must accept any interference received, including interference that may cause undesired operation.

FCC Interference Statement_Class A

This equipment has been tested and found to comply with the limits for a Class A digital device, pursuant to part 15 of the FCC Rules. These limits are designed to provide reasonable protection against harmful interference when the equipment is operated in a commercial environment. This equipment generates, uses, and can radiate radio frequency energy and, if not installed and used in accordance with the instruction manual, may cause harmful interference to radio communications. Operation of this equipment in a residential area is likely to cause harmful interference in which case the user will be required to correct the interference at his own expense.

FCC Caution

Any changes or modifications not expressly approved by the party responsible for compliance could void the user's authority to operate this equipment. This transmitter must not be co-located or operating in conjunction with any other antenna or transmitter.

Industry Canada Statement

This device complies with RSS-247 of the Industry Canada Rules. Operation is subject to the following two conditions: (1) This device may not cause harmful interference, and (2) this device must accept any interference received, including interference that may cause undesired operation. Ce dispositif est conforme à la norme CNR-247 d'Industrie Canada applicable aux appareils radio exempts de licence. Son fonctionnement est sujet aux deux conditions suivantes: (1) le dispositif ne doit pas produire de brouillage préjudiciable, et (2) ce dispositif doit accepter tout brouillage reçu, y compris un brouillage susceptible de provoquer un fonctionnement indésirable.

7.3 Revision History

Version	Date	Descriptions
1.0	2021-03-11	• Initial release
1.1	2021-04-19	• Changed and added) 1.2 Purpose of Use • Changed) 2.1.3 SCU (System Control Unit) – Optional • Changed) 2.1.4 Cradle (Optional) • Changed) 2.1.5 Battery Charger (Optional) • Changed) 2.2.4 Wireless Communication

Vieworks Co., Ltd.

Headquarter

41-3, Burim-ro 170beon-gil, Dongan-gu, Anyang-si,

Gyeonggi-do, 14055 Republic of Korea

Telephone: +82-70-7011-6161

Fax: +82-31-386-8631

Homepage: http://www.vieworks.com

Hwaseong Site

25-7, Jeongnamsandan 2-gil, Jeongnam-myeon, Hwaseong-si,

Gyeonggi-do, 18514 Republic of Korea

Telephone: +82-70-7011-6161

Homepage: http://www.vieworks.com

EC REP

European representative: Obelis s.a

Bd. Général Wahis 53

1030 Brussels, BELGIUM

Tel: +(32) 2.732.59.54

Fax: +(32) 2.732.60.03

E-mail: mail@obelis.net