VIVIX-S 1717N User Manual

CE 0434

© Vieworks. 2015 All rights reserved.

Under copyright laws, this manual should not be reproduced, in whole or in part, without the written permission of Vieworks.

Contents

1. Instruction 8

1.1 Document Guide 9

1.1.1 Caution Information 9

1.1.2 Target 9

1.1.3 Symbols 9

1.1.4 Notations 10

1.1.5 Contact Department 10

1.2 Product Use Guide 11

1.2.1 Product Usage 11

1.2.2 Disclaimer 11

1.2.3 Product Disposal 12

1.2.4 Trademarks 12

1.3 Safety Instruction 13

1.3.1 Management and Authority 13

1.3.2 Power Supply 13

1.3.3 Handling 14

1.3.4 Battery Pack and Charger 15

1.3.5 Environment of Use 16

1.3.6 Problem Management 17

1.3.7 Maintenance and Inspection 17

1.4 Product Usage Guide 18

1.4.1 Calibration 18

1.4.2 Length Measurement 18

1.4.3 Left/Right Marker 18

1.4.4 Image Backup 18

1.4.5 Use Limitations 19

1.4.6 Disposal 19

1.4.7 Pediatric Application 19

1.4.8 Before Exposure 19

1.4.9 During Exposure 20

1.4.10 Operating and Storage Environment 20

1.4.11 Others 20

2. Product 21

2.1 Overview 22

2.1.1 Features 22

2.2 Product Components 23

DRAFT

2.2.1 Detector 23
2.2.2 SCU (System Control Unit) 23
2.2.3 Battery & Charger 24
2.2.4 Accessories 25

2.3 VIVIX-S 1717N Detector 26
2.3.1 Specifications 26
2.3.2 Drawing Sheet 27
2.3.3 Functions 29
2.3.4 Deco Sheet 31
2.3.5 Wireless Communication 33
2.3.6 Use Environment 33

2.4 SCU Basic (FXRS-02A) 34
2.4.1 Specifications 34
2.4.2 Drawing Sheet 34
2.4.3 Functions 35

2.5 SCU Basic (FXRS-03A) 37
2.5.1 Specifications 37
2.5.2 Drawing Sheet 37
2.5.3 Functions 38

2.6 SCU mini (FXRS-04A) 40
2.6.1 Specifications 40
2.6.2 Drawing Sheet 40
2.6.3 Functions 41

2.7 Battery Pack [TBD] 43
2.7.1 Specifications 43
2.7.2 Drawing Sheet 43

2.8 Battery Charger 44
2.8.1 Specifications 44
2.8.2 Drawing Sheet 44

2.9 Others 45
2.9.1 X-ray Generator (Recommended Exposure Condition) 45
2.9.2 Recommended Specifications of Workstation (PC) 45
2.9.3 Recommended Specifications of Grid 45

3. System Configuration 46

3.1 Detector Connection Methods 47
3.1.1 Wireless Connection 47
3.1.2 Wired Connection 48

DRAFT

3.2 Diagram **49**
3.2.1 Block Diagram 49
3.2.2 Wiring Diagram 49
3.3 System Configuration **50**
3.3.1 AP Mode (SCU AP Mode) 50
3.3.2 Tether Interface Mode 51
3.3.3 External AP Mode 52
3.3.4 Detector AP Mode 53
3.3.5 Detector Stand-Alone Mode 54
3.4 Generator Interface **55**
3.4.1 AED (Auto Exposure Detection) Interface 55
3.4.2 DR Trigger Interface 56
3.5 Configuring DR Trigger Interface **57**
3.5.1 Trigger Interface Way 57
3.5.2 Packet Trigger 57
3.5.3 Line Trigger 58
3.5.4 EXT_INF Port Pin Map 59
3.5.5 Input / Output Circuit 61
4. Installation **62**
4.1 Battery Pack **63**
4.1.1 How to insert a battery pack 63
4.1.2 How to take out a battery pack 64
4.1.3 How to charge a battery pack 65
4.2 Product Installation **67**
4.2.1 Connecting Devices 67
4.2.2 Booting up SCU 70
4.2.3 Booting up the Detector 70
4.2.4 Checking Status LED of Detector 71
4.3 Software Installation **73**
4.3.1 Software Classification 73
4.3.2 Software Installation 73
4.4 Windows Environment Setting **74**
4.4.1 Network Configuration 74
4.4.2 Disabling Sleep Mode of Monitor 78
5. Setting **79**
5.1 Start Setting **80**
5.1.1 Setup Program 80

DRAFT

5.1.2 Checking Devices 80
5.1.3 Getting into the Devices 82

5.2 SCU Setting 83
5.2.1 SCU Configuration 83
5.2.2 SCU Diagnosis 86

5.3 Detector Setting 87
5.3.1 Detector Configuration 87
5.3.2 Detector Power Save Function 90

5.4 Changing the Wireless Setting 92
5.4.1 Switching to the Detector AP Mode 92
5.4.2 Synchronizing the Wireless Setting 92

6. Calibration 93

6.1 Calibration Dialogue 94
6.1.1 System Configuration Dialogue 94
6.1.2 Offset Calibration Dialogue 97
6.1.3 Defect Calibration Dialogue 98
6.1.4 Gain Calibration Dialogue 99

6.2 Detector Configuration 100

6.3 Calibration Guide 102

6.4 Calibrating by Loading the Calibration Data 103
6.4.1 Preparing Calibration Data 103
6.4.2 Loading Defect Calibration Data 103
6.4.3 Loading Gain Calibration Data 104

6.5 Direct Calibration 105
6.5.1 Prepration 105
6.5.2 Offset Calibration 105
6.5.3 Gain Calibration 106
6.5.4 Auto Defect Correction 107
6.5.5 Manual Defect Correction 110

7. Diagnosis, Inspection and Maintenance 113

7.1 Diagnosis 114
7.1.1 Image Diagnosis 114
7.1.2 Battery Pack Diagnosis 116
7.1.3 Wireless Communication Diagnosis 117
7.1.4 Communication Speed Diagnosis 118

7.2 Product Inspection 119

DRAFT

7.2.1 Daily Inspection 119
7.2.2 Performance Inspection 119

7.3 Self Diagnosis 120
7.3.2 Self-Diagnosis Items of Detector and Measures 120
7.3.3 Self-Diagnosis Items of SCU and Measures 122

7.4 Cleaning and Disinfection 123

7.5 Product Initialization 124
7.5.1 SCU Initialization 124
7.5.2 Detector Initialization 125
7.5.3 Wireless Initialization of Detector 126

7.6 Replacing the Fuse of SCU (SCU Basic only) 127

8. Troubleshooting 128

8.1 Trobleshooting 129
8.1.1 Troubleshooting Guide 129
8.1.2 Failed to Turn the Detector On 129
8.1.3 The Power Switch of SCU or Status LED is not worked 129
8.1.4 Communication Test is failed 130
8.1.5 The Active LED and Data LED of the Detector are blinking 130
8.1.6 Errors in Detector LED 131
8.1.7 Rapid Consumption of Battery 131
8.1.8 Battery Pack or Installation Part of Battery is Getting Hot 131

9. Regulatory Information 132

9.1 Medical Equipment Safety Standards 133
9.1.1 Medical Equipment Classification 133
9.1.2 Product Safety Standard 133

9.2 Radio Frequency Compliance Information 135
9.2.1 FCC Compliance 135
9.2.2 FCC SAR 136
9.2.3 CE R&TTE SAR 136

9.3 Labels and Symbols 137
9.3.1 Label 137
9.3.2 Product Serial Number 143
9.3.3 Product Symbols 144

9.4 Guidance and Manufacturer's Declaration for EMC 145
9.4.1 Electromagnetic Emissions 145
9.4.2 Electromagnetic Immunity 145

DRAFT

10. Information 148

10.1 Service Information 149

10.1.1 Product Lifetime 149

10.1.2 Regular Inspection and Maintenance 149

10.1.3 Repair 149

10.1.4 Replacement Parts Support 149

10.1.5 Consumables 149

10.2 Warranty 150

10.3 Revision History 151

DRAFT

This device complies with part 15 of the FCC Rules. Operation is subject to the following two conditions: (1) This device may not cause harmful interference, and (2) this device must accept any interference received, including interference that may cause undesired operation.

Changes or modifications not expressly approved by the party responsible for compliance could void the user's authority to operate the equipment. This transmitter must not be co-located or operated in conjunction with any other antenna or transmitter.

5150~5250 MHz band is restricted to indoor operations only. (for FCC and CE)

FCC ID: PFRFXRD-1717NAW

FCC ID: PFRFXRD-1717NAW in the RF module do not use DFS band. *RF modue FCC ID:RYK-WPEA-121N.
Host device of the approved module shall be marked with the following item:
Contains Transmitter Module FCC ID:RYK-WPEA-121N

1. Instruction

This section gives basic information of this manual and products with the safety guide.

Document Guide

Product Use Guide

Safety Instruction

Product Operation Guide

DRAFT

1.1 Document Guide

This User Manual explains how to use the **VIVIX-S 1717N** detector made by Vieworks, X-ray interface unit, and other peripheral equipment. With this user manual, you can install, set and manage the **VIVIX-S 1717N** detector as well as use its various functions.

1.1.1 Caution Information

If the user is not fully aquainted with this manual, the product can be malfunctioned or unsuspected problem can be happened due to carelessness. To prevent any medical accidents, the user should fully understand the instructions of this manual before operating this product.

1.1.2 Target

This manual is intended for service enginneers who install and set the **VIVIX-S 1717N** detector.

1.1.3 Symbols

This product should be operated under the safety instructions with the warning or caution symbol in this manual. It is important for you to read and understand the contents with the following symbol for operating the products safely.

Caution and Warning Symbol

	• This symbol is used to indicate a potentially hazardous situation which may cause death, personal injury or substantial property damage if the instructions are ignored. Be sure to understand the instructions of this symbol for the safe operation.

Information Symbol

	• This symbol is used to indicate reference and complementary information related to the product. Users should read the instructions of this symbol carefully.

Symbol for Change

	• This symbol is indicated in the cases below. ▫ Items under consideration for adding, deleting or revising contents. ▫ Items ready to review for the expected product change. ▫ Items need a final review and approval. ▫ Items which need to improve sentences or images.

DRAFT

1.1.4 Notations

Bold Types

We applied bold font style to the words which mean the products terms, or the words and sentences that are needed to transmit clear meaning to the customers. This helps you to easily distinguish the words from other technical ones for explaining functions.

1.1.5 Contact Department

For any comments or inquiries regarding this document, contact via email below.

Item	Contents
Department	Customer Support Division in Vieworks
E-mail	CustomerSupport@vieworks.com

DRAFT

1.2 Product Use Guide

This chapter provides instructions about the use of product and disposal as well as the liability limit of Vieworks.

1.2.1 Product Usage

1 Only a physician or a legally certified operator should use this product.
2 The equipment should be kept in a safe and operable condition by maintenance personnel.
3 Observe the contents written in this user manual when installing and using this product.
4 Use only specifications of computers and image display monitors recommended by this user manual.
5 Use only the dedicated cables provided with this product.
6 For details about installing and using this product, consult your sales representative or a distributor.

1.2.2 Disclaimer

1 In no event shall Vieworks be liable for damage or loss arising from a fire, earthquake, any intentional or negligent action by users.
2 In no event shall Vieworks be liable for damage or loss arising from any trial usage, or other usage under abnormal conditions.
3 In no event shall Vieworks be liable for personal physical harm or property damage that is sustained when the instructions of this manual are not followed.
4 In no event shall Vieworks be liable for direct or indirect consequential damages arising from the use of this product.
5 In no event shall Vieworks be liable for any damage arising from moving, alteration, inspection or repair by a person other than authorized service engineers.
6 In no event shall Vieworks be liable for loss of image data for any reason.
7 Roentgenography, image processing, image reading, and image data storage must be performed in accordance with the laws of the country or region in which the product is being used.
8 The user is responsible for maintaining the privacy of image data acquired from this product.
9 It is the responsibility of the attending physicians to provide medical care services. Vieworks will not be liable for faulty diagnoses.
10 Specifications, composition, and appearance of this product may change without prior notice.

DRAFT

1.2.3 Product Disposal

Disposal of this product in an unlawful manner may have a negative impact on human health and the environment. When disposing this product, therefore, be absolutely sure to follow the procedure which is in conformity with the laws and regulations applicable in your area.

European Union (and EEA*) only

This symbol indicates that this product is not to be disposed with your household waste, according to the WEEE Directive (2002/96/EC) and your national law.

This product should be handed over to a designated collection point, e.g., on an authorized one-for-one basis when you buy a new similar product or to an authorized collection site for recycling electrical and electronic equipment (EEE). Improper handling of this type of waste could have a negative impact on the environment and human health due to potentially hazardous substances that are generally associated with EEE. At the same time, your cooperation in the correct disposal of this product will contribute to the effective usage of natural resources. For more information on where you can drop off your waste equipment for recycling, please contact your local city office, waste authority, approved WEEE scheme, or your household waste disposal service.

*EEA: Norway, Iceland, and Liechtenstein

1.2.4 Trademarks

The name "Vieworks" and Vieworks logo are registered trademarks of Vieworks.

© Vieworks. 2015 All rights reserved.

The copyright of this document is owned by Vieworks. Under copyright laws, this document cannot be reproduced, in whole or in part, without the written permission of Vieworks.

DRAFT

1.3 Safety Instruction

This product is designed and manufactured to ensure maximum safety of operation and to meet all the safety requirements applicable to electronic medical equipment. Follow these safeguards while using the products. If not, severe personal injury or substantial property damage can be happened. It is important for you to read and understand the contents of this manual before attempting to use the product.

1.3.1 Management and Authority

- The product should be installed, operated, and serviced according to Vieworks maintenance procedures and by personnel from Vieworks or distributor who providing purchase of the Vieworks' product.
- Operation and maintenance should be done in strict compliance with the operation instructions contained in the manual.
- The system, in whole or in part, cannot be modified in any way without prior approval from Vieworks.
- Before authorizing any person to operate the system, verify that the person has read and fully understood the User Manual. The owner should make certain that only properly trained and fully qualified personnel are authorized to operate the equipment. An authorized operators list should be made and maintained.
- It is important that this User Manual be kept at hand, studied carefully, and reviewed periodically by the authorized operators.
- If a malfunction occurs, do not use this device until qualified personnel correct the problem.

1.3.2 Power Supply

- Do not operate the equipment using any type of power supply other than the one indicated on the rating label. Otherwise, it may result in a fire or electric shock.
- Do not supply power to more than one piece of equipment using the same AC outlet for this product. Doing so may result in a fire or electric shock.
- Do not connect a multiple portable socket-outlet or extension cord to the system. Doing so may result in a fire or electric shock.
- Always connect the three-core power cord plug to a grounded AC power outlet.
- Be sure to ground the equipment to an indoor grounded connector. Also, be sure to connect all the grounds for the system to a common ground.
- Do not use any power source other than the one provided with this product. Otherwise, a fire or electric shock may be caused due to a leakage.
- The owner should ensure continuous power supply to the system with voltage and current according to the product specifications. If the system is powered unstably during its operation, we recommend you to install UPS (Uninterrupted Power Supply) to avoid loss of data.

- To make it easy to disconnect the plug at any time, avoid putting any obstacles near the outlet. Otherwise, it may not be possible to disconnect the plug in an emergency.
- Do not place a heavy object such as medical equipment on cables and cords, and do not pull, bend, bundle, or step on them. Doing so may damage their sheath. If you alter them, it may damage the cords which could result in a fire or electric shock.
- Securely plug the power cord into the AC outlet. If contact failure occurs, or if dust/metal objects come into contact with the exposed metal prongs of the plug, fire or electric shock may result.
- Be sure to turn OFF the power to each piece of equipment before connecting or disconnecting the cords. Otherwise, you may get an electric shock that could result in death or serious injury.
- Be sure to hold the plug or connector to disconnect the cord. If you pull the cord, the core wire may be damaged, resulting in a fire or electric shock.
- Do not handle the product with wet hands. You may experience an electric shock that could result in death or serious injury.

1.3.3 Handling

- Never disassemble or modify the equipment. Doing so may result in a fire or electric shock. Also, since the equipment incorporates parts that may cause an electric shock as well as other hazardous parts, touching them may cause death or serious injury.
- Do not connect any equipment which is not specified in this User Manual.
- Do not place anything on surface of the equipment. The object may fall and cause an injury. Also, if metal objects such as needles or clips fall into the equipment, or if liquid is spilled, it may result in a fire or electric shock.
- Do not hit or drop the equipment. It may be damaged if receiving a strong jolt. If the equipment is used without being repaired, it may result in a fire or electric shock.
- Do not place excessive weight on the detector. The internal image sensor may be damaged and it can affect to the image quality.
- Have the patient take a fixed posture and do not let him or her touch parts unnecessarily. If the patient touches connectors or switches, it may result in electric shock or malfunction of the equipment.
- Do not spill liquid or chemicals onto the detector. In cases where the patient is injured, protect the equipment with a disposable covering not allow to come in contact with blood or other body fluids. Otherwise, it may result in a fire or electric shock.
- For safety reasons, be sure to turn OFF the power of the equipment when the inspections indicated in this manual are going to be performed.
- Do not submerge the detector in water.
- Be sure to use the detector on a flat surface so it will not bend. Otherwise, the internal image sensor may be damaged. Be sure to securely hold the detector while using it in upright positions.
- Because the equipment cable is long, take care that cables do not become tangled during use. Also, be careful not to get your feet caught in the cable. It may cause a malfunction of the equipment or injury to the user from tripping over the cable.

- Do not block the ventilation ports of SCU to prevent overheating. Overheating can cause product's malfunctions and damages.

1.3.4 Battery Pack and Charger

- Do not use the battery pack as a power source for equipment other than **VIVIX-S 1717N** detector. Be sure to use only the dedicated battery pack for the **VIVIX-S 1717N** detector.
- The battery charger is designed for the dedicated battery pack. Do not use the battery charger other than the dedicated one. Otherwise, a battery explosion or a battery leak may occur, resulting in fire or electrical shock.
- Do not operate the battery charger using any type of power supply other than the one indicated on the rating label.
- Do not handle the product with wet hands.
- Do not attempt to disassemble, alter, or apply heat to the product.
- Avoid dropping or subjecting the product to severe impacts. To avoid the risk of injury, do not touch the internal parts of the battery if it has been cracked.
- Stop using the battery pack immediately if it emits smoke, a strange smell, or otherwise behaves abnormally.
- Do not let the battery pack and battery charger come into contact with water or other liquids and do not allow them to get wet.
- Do not clean with substances containing organic solvents such as alcohol, benzene, thinner, or other chemicals. Otherwise, fire or electrical shock may result.
- Do not allow dirt or metal objects (such as hair pins, clips, staples or keys) to contact the terminals. Otherwise, battery explosion or leakage of electrolyte may occur, resulting in fire, injury or pollution of surrounding area. If the battery leaks and the electrolytes come into contact with your eyes, mouth, skin or clothing, immediately wash it away with running water and seek medical attention.
- Do not leave, store, or place the product in a location near heat sources, or in a place subject to direct sunlight, high temperature, high humidity, excessive dust, or mechanical shock. Otherwise, battery leakage, overheating or damage to the product may occur, resulting in electrical shock, burns, injury or fire.
- Do not attempt to use a battery pack that has deteriorated. Using a battery pack that has exceeded its life cycle may lead to overheating, fire or explosion.
- The Lithium ion battery is recyclable.
- Battery slowly discharges even if not in use.
- The battery pack may have expired if it discharges immediately after being fully charged. You can purchase an optional battery pack to replace an exhausted one.
- The battery pack is a consumable item. If a fully charged battery is consumed quickly, use a new and fully charged battery pack.
- Be sure to charge the battery periodically (once a year) if it is not used for an extended period of time. The battery pack cannot be charged if it has been over discharged.
- Before discarding the battery pack, cover the terminals with adhesive tape or other insulators. Contact with other metal materials may cause fire or explosion.

1.3.5 Environment of Use

- Do not install the equipment in any of the locations listed below. Doing so may result in failure or malfuction, equipment falling, fire, or injury.
  - Close to facilities where water is used.
  - Where it will be exposed to direct sunlight
  - Close to the air outlet of an air-conditioner or ventilation equipment
  - Nearby the electric heating applicance such as a heater
  - Where the power supply is unstable
  - In a dusty environment
  - In a saline or sulfurous environment
  - Where temperature or humidity is higher than the operating temperature
  - Where there is freezing or condensation
  - In areas prone to vibration
  - On an incline or in an unstable area
- This product may malfunction due to electromagnetic interference (EMI) caused by telecommunication devices, transceivers, electronic devices, etc. To prevent the electromagnetic wave from badly influencing the product, be sure to avoid placing it in close proximity to the product. Or, change direction or position of the product or move into the shielded place to reduce electromagnetic interference.
- This equipment is not suitable for use in the presence of a flammable anesthetic mixture with air or with oxygen or nitrous oxide.
- Conductive fluids that drain into the active circuit components of the system may cause short circuits that can result in electrical fire. Therefore, do not place fluids or food on any part of the system.
- To avoid electric shocks and burns caused by use of the wrong type of fire extinguisher, make sure that the fire extinguisher at the site has been approved for use on electrical fires.
- The battery charger and SCU (System Control Unit) cannot be used in patient's vicinity.

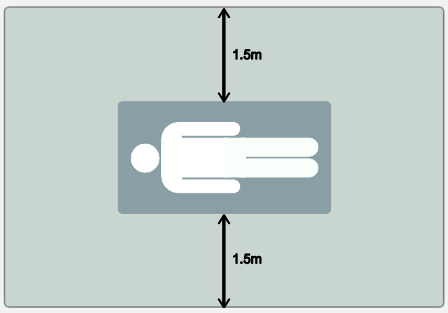

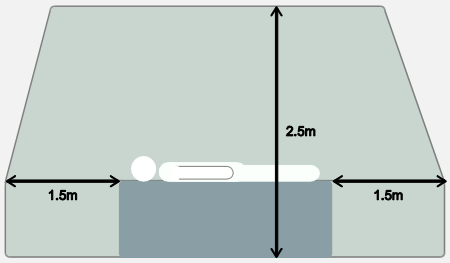

1.3.6 Problem Management

- Should any of the following occur, immediately turn OFF the power to each piece of equipment, unplug the power cord from the AC outlet, and contact sales representative or distributor.
  - When there is smoke, an odd smell or abnormal sound no period.
  - When liquid is spilled into the equipment or a metal object is entered through an opening.
  - When the equipment has been dropped and is damaged.

1.3.7 Maintenance and Inspection

- Do not use or store the equipment near flammable chemicals such as acetone, benzene, thinner, etc. If chemicals are spilled or evaporated, it may result in a fire or electric shock through contact with electric parts inside the equipment.
- If any flammable cleaning agent is used for the product, be sure to take care when using them.
- When the equipment is going to be cleaned, be sure to turn OFF the power of the equipment and unplug the power cord from the AC outlet. Never use thinner, acetone, benzene or any other flammable cleaning agent. Otherwise, it may result in a fire or electric shock.
- Clean the plug of the power cord periodically by unplugging it from the AC outlet and removing dust or dirt from the plug, its periphery, and AC outlet with a dry cloth. If the cord is kept plugged in for a long time in a dusty, humid or sooty place, dust around the plug will attract moisture, and this could cause insulation failure that could result in a fire.
- Be sure to turn OFF the power of the equipment while cleaning. Otherwise, a fire or electric shock may occur.

DRAFT

1.4 Product Usage Guide

- When using the equipment, take the following precautions. Otherwise, problems may occur and the equipment may not function correctly.

1.4.1 Calibration

- To ensure optimal system performance, it is important to verify that the system is calibrated correctly.
- Check if the calibration is performed after the equipment is completed to be installed or repaired.
- Do not try to use the system if the calibration has not been performed.
- If it is difficult to perform the calibration directly, use the calibration data in the detector.

- The calibration result can be different by the use environment. Therefore, if the result performed with the calibration data in the detector is not satisfied, you can create the data at the field in person by using **VIVIX Setup**, the calibration software.

1.4.2 Length Measurement

- Before taking any length measurement on an image, carry out the length calibration with a reference object and verify its results for correct measurement.

1.4.3 Left/Right Marker

- The operator is responsible for making a correct and clear mark on the left or right side of the image.
- The software includes a function to mark the image with **L** (left) or **R** (right) while acquiring the image through printing and archiving.
- Prepare an alternative way to prevent any confusion if the operator does not choose to use **L/R** marks.

1.4.4 Image Backup

- To avoid missing images which might result in a patient being exposed to additional dose of radiation, it is important to send images to PACS or backup images by using film or external storage media (CD, DVD, HDD, USB).
- If the hard disk of your workstation is about to be full, the operator should backup images to somewhere else and delete them to make storage (memory) space in the hard disk for new patients.

- The image backup should be done as a routine operation for every patient and image.

DRAFT

1.4.5 Use Limitations

- Vieworks software has the engineer mode operated by inputting the administrator password only.
- This mode should be operated by the person who is qualified by Vieworks.

1.4.6 Disposal

- Disposal of this product in an unlawful manner may have negative effects on human health and the environment.
- Be sure to follow the procedure which is in conformity with the laws and regulations applicable in your area.

1.4.7 Pediatric Application

- Every request should be reviewed by a pediatric radiologist prior to beginning the examination to ensure that an appropriate study is being performed.
- If the technologist notices an unusual request, he or she must contact a radiologist in charge. Examples include orders- a Full Cervical, Thoracic, and Lumbar Spine series. The pediatric radiologist should contact the ordering physician and decide which study is best for the pediatric patient.
- The technologist should use a proper technique considering the patient's size to decrease the radiation dose when he or she acquires diagnostic images.
- ALL pediatric patients shall be shielded for their X-ray examinations, except for when the shield will obscure the region of interest, as in a pelvic or SI joint X-ray for trauma or arthritis, or when it is physically or clinically unreasonable to shield the patient.
- For routine Hip X-Rays, ALL male children shall have their scrotum shielded using the small gonadal shield while females may not be shielded because doing so would obscure the hips.
- To minimize motion in infants and young children, swaddle the infant. Use distraction tools to improve cooperation and projectors with child-friendly themes, music, toys with flashing lights or music, child-friendly images on the ceiling or walls, singing, counting, and a parent reading and talking to the child through the console all can help reduce anxiety and comfort the child.
- A scoliosis series will consist of a single frontal standing view of the spine. No lateral view or supine view is needed, unless specifically asked for by the Orthopedist or Radiologist. If the female's breasts can be shielded without obscuring the spine, breast shields should be used.

1.4.8 Before Exposure

- Be sure to check the equipment daily and confirm that it works properly.
- Sudden heating of the room in cold areas will cause condensation to form on the equipment. In this case, wait until the condensation evaporates before performing an exposure. If the equipment is used while condensation is formed in it, problems may occur in the quality of captured images.
- When an air-conditioner is used, be sure to raise/lower the temperature gradually so that difference between the temperature in the room and in the equipment does not occur, to prevent condensation.

DRAFT

1.4.9 During Exposure

- This equipment is not protected (sealed) against liquids such as blood and medicine in the operating room. If necessary, wrap the equipment in a disposable cover when using it.
- Do not use the selected frequency channel (2.4 ㎓ and 5 ㎓ dual band) for other wireless devices. Mutual interference may affect the image data transmission rate.
- Do not use the detector near devices generating a strong magnetic field. Doing so may produce image noise or artifacts.

1.4.10 Operating and Storage Environment

- This equipment is mainly used in the X-ray exposure room and hospital wards. To use it in other places, consult Vieworks' sales representative or a distributor.
- Do not expose this equipment to high temperatures and/or high humidity. Malfunctions may occur.
- When not in use, keep the products in a safe location.
- Be sure to use and store this equipment under the conditions described below.

Classification	Temperature	Humidity (Non-condensing)	Atmosphere
Operating Environment	+10 ~ +35℃	30 ~ 85%	700 ~ 1060 hPa
Storage Environment	-15 ~ +55℃	10 ~ 90%	500 ~ 1060 hPa

1.4.11 Others

- Do not use this equipment in combination with peripherals such as defibrillators or large electric motors as these may cause power-supply noise or power supply voltage variations. Doing so may prevent normal operation of this equipment and peripherals.

DRAFT

2. Product

This section gives an instruction about the product components and their specifications.

Overview
Product Components
VIVIX-S 1717N Detector
SCU Basic (FXRS-02A)
SCU Basic (FXRS-03A)
SCU mini (FXRS-04A)
Battery Pack
Battery Charger
Others

DRAFT

2.1 Overview

VIVIX-S 1717N detector is the digital X-ray imaging solution. It acquires images by exposing X-ray which has been penetrated the human body. When X-ray photons pass through scintillator in the detector, the photons convert to visible ray, and the visible ray is converted to electronic signals through TFT (a-Si). Then the detector digitalizes x-ray images and transfers them to the computer (workstation) for radiography diagnostics. Users can perform image diagnosis easily through the image display monitor with this process. Advanced digital image processing also allows considerably efficient diagnosis, all kinds of information management, and sharing of image information on network.

- This detector is used for the general-purpose diagnostic procedures, and it is intended to replace radiographic film / screen systems.
- This detector is not intended for mammography applications.

2.1.1 Features

- Since **VIVIX-S 1717N** detector is compatible with a conventional film cassette, it enables to replace the analog radiographic diagnosis (Supporting ISO4090 standard).
- The new sensor with 124μm pixel pitch produces high spatial resolution (approx. 5.2 Mega pixels) digital images.
- Various applications such as neonatal, ENT, equine and cephalo
- Choose between two scintillator types (CsI and Gadox) of detector provided by Vieworks.
- The built-in wireless communication supports **IEEE 802.11n** to acquire images without a wired connection in anytime, anywhere.
- Make direct wireless communication with the built-in wireless AP function. (Inside AP™)
- Supports the stable and reliable AED (Auto Exposure Detection) function. (Anytime™)
- Designed as lightweight and thin with portability to allow easy exposure in anytime, anywhere.
- Used in various ways for infant / animals and in the dental clinic / ENT, etc.

DRAFT

2.2 Product Components

2.2.1 Detector

Component		Model / Description
VIVIX-S 1717N Wireless Detector		• FXRD-1717NAW (4.5kg) • FXRD-1717NBW (4.5kg)
VIVIX-S 1717N Wired Detector		• FXRD-1717NA (4.2kg) • FXRD-1717NB (4.2kg)

- A deco sheet attached on the detector can be different depending on each client company.

2.2.2 SCU (System Control Unit)

Component		Model / Description
SCU Basic (FXRS-02A)		• FXRS-02A (2.5kg)
		• AC Power Cable (2m) • 110V (1EA) / 220V (1EA)
SCU Basic (FXRS-03A)		• FXRS-03A (2.8kg)
		• AC Power Cable (2m) • 110V (1EA) / 220V (1EA)

DRAFT

		• FXRS-04A (1.2kg)
SCU mini (FXRS-04A)		• DC Power Supply (24V)
		• AC Power Cable (2m) • 110V (1EA) / 220V (1EA)

• You can choose the type of SCU depending on the purpose of use.

2.2.3 Battery & Charger

Component		Description
Battery		• FXRB-02A (0.12kg, 4EA)
Charger		• FXRC-02A (0.8kg)
		• DC Power Supply (24V)
		• AC Power Cable (2m) • 110V (1EA) / 220V (1EA)

DRAFT

2.2.4 Accessories

Component		Description
Resource		• Software (Viewer or SDK) • Manuals
Cables		• Tether Interface Cable (7m)
		• Ether Con Cable (7m, Option)
		• Generator Interface Cable (15m)
		• UTP LAN Cable (15m, Direct) ▫ CAT 5E or CAT6

- The use of accessories and cables other than those approved and sold by Vieworks Co., Ltd. may result in increased release of electromagnetic waves or decreased stability of the equipment.
- Accessory equipment connected to the analog and digital interfaces must be certified according to the respective IEC standards. All combinations of equipment must be in compliance with **IEC 60601-1-1** system requirements.
- Any person who connects additional equipment to the signal input or signal output ports configures a medical system, and is therefore responsible for ensuring that the system complies with the requirements of the system standard **IEC 60601-1**.
- Consult your sales distributor or manufacturer if you have any concerns.

DRAFT

2.3 VIVIX-S 1717N Detector

VIVIX-S 1717N is designed to acquire digital images by collecting x-ray signals and sereval conversion processes. You can use the acquired image (17″ x 17″ film size) diversely depending on the purpose of use.

- **VIVIX-S 1717N** is one of the VIVIX detector models produced by Vieworks.

2.3.1 Specifications

Item	Specifications
Model	• FXRD-1717NA (CsI) • FXRD-1717NB (Gadox) • FXRD-1717NAW (CsI) • FXRD-1717NBW (Gadox)
Image Sensor	• TFT: a-Si (Amorphous Silicon)
X-ray Scintillator Type	• FXRD-1717NA(W) : CsI: TI (Thallium doped Caesuim Iodide) • FXRD-1717NB(W) : Gd_2O_2S:Tb (Gadolinium oxysulfide)
Pixel Pitch	• 0.14㎜ (140㎛)
Field of View	• 17″ x 17″
Active Area (H x V)	• 430.08㎜ × 430.08㎜
Active Array	• 3072 x 3072 pixels
Effective Area	• 428.4㎜ x 428.4㎜
Effective Array	• 3060 x 3060 Pixels
Grayscale	• 16 bit
Spatial Resolution	• Min. 3.5 lp/㎜
Image Acquisition Time (Wired)	• 1.5 sec.
Image Acquisition Time (Wireless)	• 3 sec.
Recommended Cycle Time	• 15 sec.
X-ray Synchronization Control	• AED (Auto Exposure Detection) • DR Trigger (External line trigger)
Rated Power Supply	• DC +24V, Max. 1.0A ▫ Wired: Powered by SCU with a tether interface cable. ▫ Wireless: Powered by a battery pack (3,100 ㎃h X 2)
Power Consumption	• Max. 24W
Dimensions (H × W × D)	• 460㎜ × 460㎜ × 15.5㎜
Weight	• 4.2kg (Wired) • 4.5kg (Wireless / including a battery pack)
Image Transfer	• Wired: Gigabit Ethernet (1000BASE-T) via PoE (Power over Ethernet) • Wireless: IEEE802.11n
Data Transmission Rate (Wired)	• Max. 1Gbps
Data Transmission Rate (Wireless)	• Max. 300Mbps (MIMO 2X2)

DRAFT

2.3.2 Drawing Sheet

VIVIX-S 1717NAW / 1717NBW (Wireless Detector)

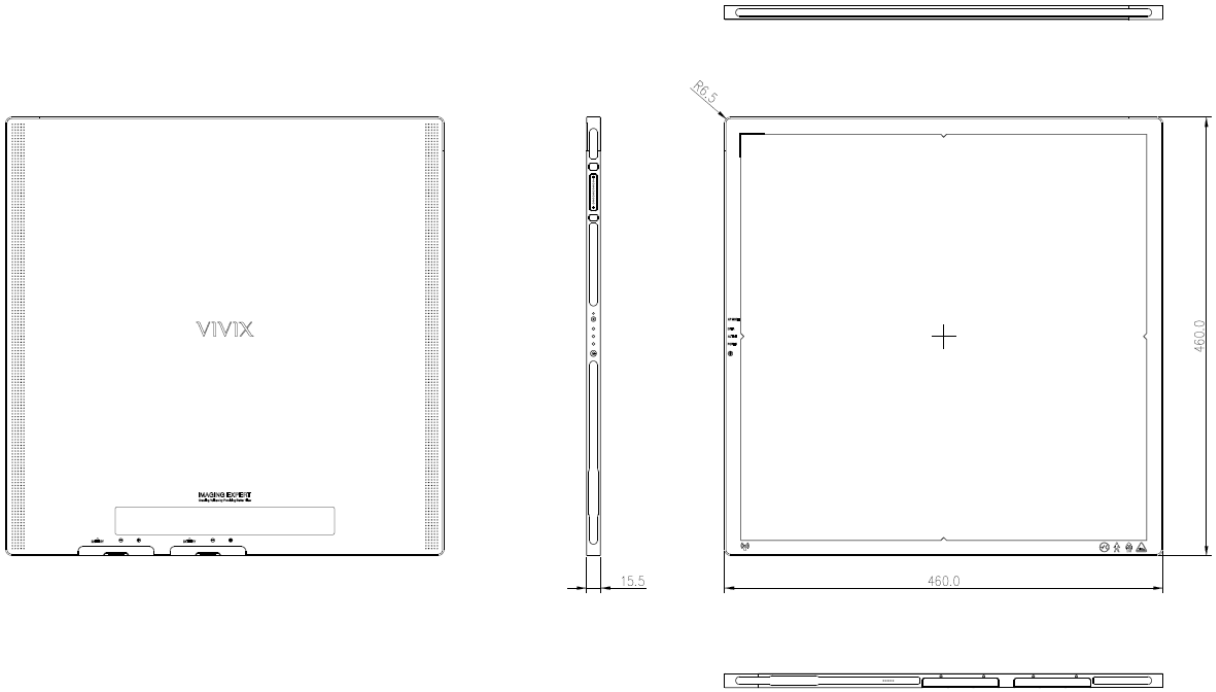

Item	Description
Dimensions (H × W × D)	460.0㎜ × 460.0㎜ × 15.5㎜
Curvature of Edges	R6.5

- Under the **ISO4090** regulation, the allowed tolerance of a thickness of detector is from **-2㎜ ~ +1㎜**.

VIVIX-S 1717NA / 1717NB (Wired Detector with a tether interface cable)

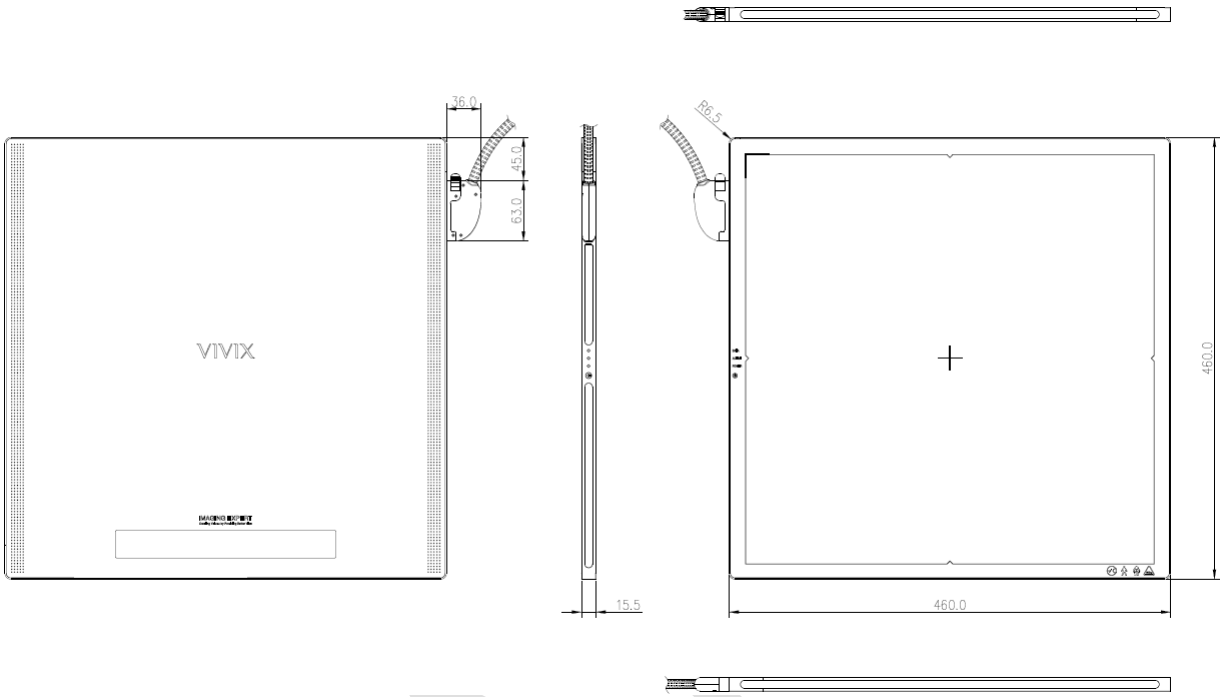

Item	Description
Dimensions (H × W × D)	460.0㎜ × 460.0㎜ × 15.5㎜
Curvature of Edges	R6.5

- Under the **ISO4090** regulation, the allowed tolerance of a thickness of detector is from -**2㎜ ~ +1㎜**.

DRAFT

2.3.3 Functions

VIVIX-S 1717NAW / 1717NBW (Wireless)

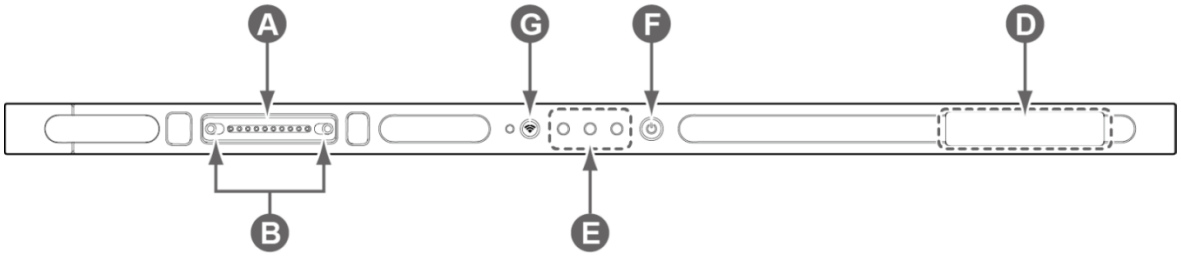

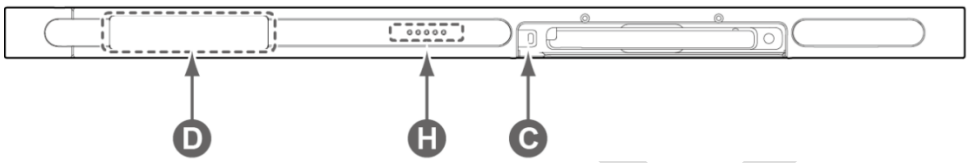

	Name	Description
A	**Tether interface connector**	Used for tighten the tether interface cable. • Used for wired connection between a detector and **SCU**.
B	**Tether interface holder**	Fix/release holder of the tether interface cable.
C	**Battery lock lever**	Lock/unlock lever of the equipped battery pack.
D	**Antenna for wireless LAN**	Antennas for wireless communication (2EA)
E	**Status indicator**	Detector status indicator • **DATA LED** (Blue): Indicates communication and transmission • **ACTIVE LED** (Orange): Indicates ready to work • **POWER LED** (Green): Indicates power On/Off status
F	**Power button**	Detector power button
G	**AP ON /OFF Button**	Turns on / off the AP mode.
H	**Battery Remaining LED**	Notices the remaining of battery in 5 levels.

DRAFT

VIVIX-S 1717NA / 1717NB (Wired)

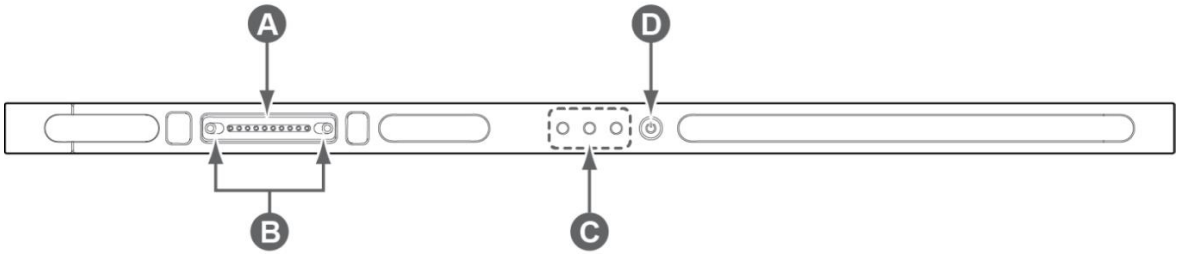

	Name	Description
A	**Tether interface connector**	Used for tighten the tether interface cable. • Used for wired connection between a detector and **SCU**.
B	**Tether interface holder**	Fix/release holder of the tether interface cable.
C	**Status indicator**	Detector status indicator • **DATA LED** (Blue): Indicates communication and transmission • **ACTIVE LED** (Orange): Indicates ready to work • **POWER LED** (Green): Indicates power On/Off status
D	**Power button**	Detector power button

DRAFT

2.3.4 Deco Sheet

VIVIX-S 1717NAW / 1717NBW (Wireless)

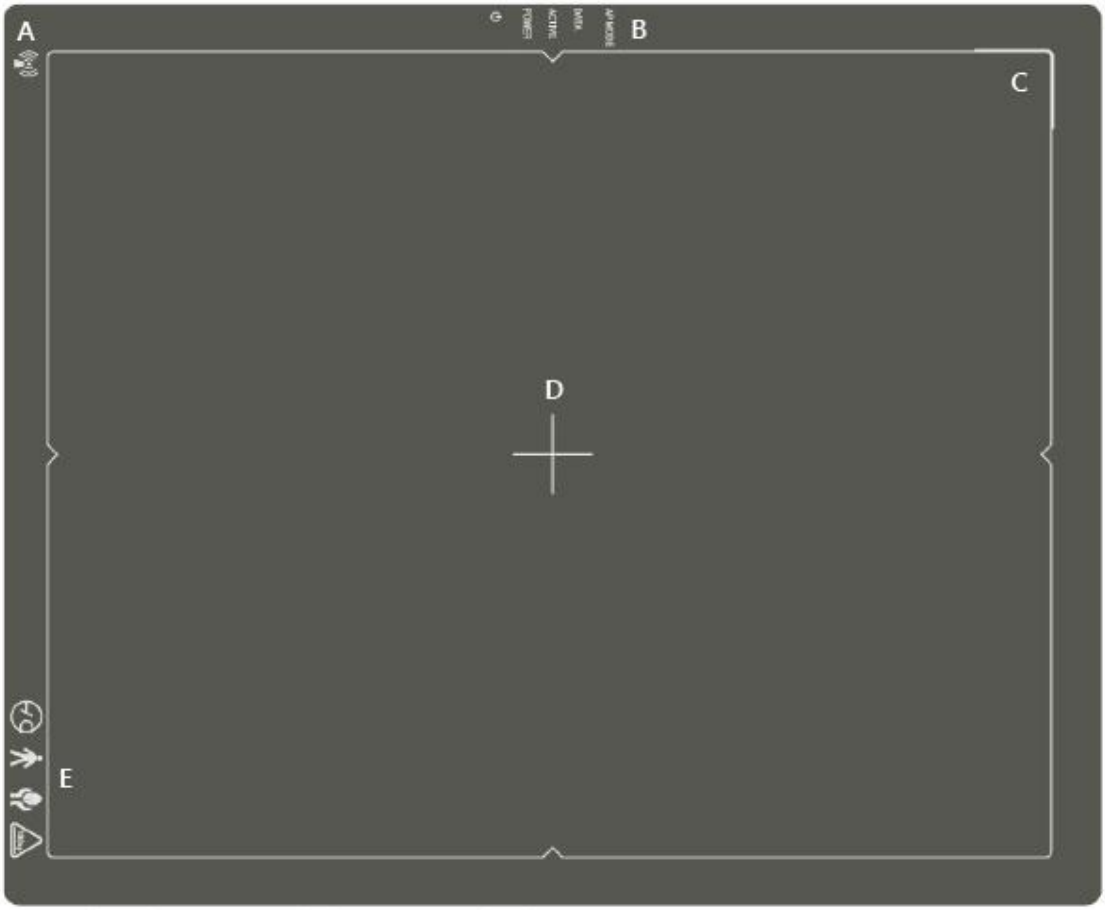

	Indication Info.	Description
A	**Wireless communication logo**	Applied to VIVIX-S 1717NAW / 1717NBW.
B	**Status indication logo**	Indicates the operating state of detector. • AP Mode, DATA, ACTIVE, POWER
C	**Image starting point**	Indicates the starting point of an original image.
D	**Center of the detector**	Indicates the central position of detector.
E	**Certification logo**	Indicates the certification logos relating to a medical device.

- Image starting point (0.0) of this detector is located nearby the tether interface connector. You can change the displayed direction of an image from the **VIVIX Setup** program, but it does not mean that the starting point and direction of the original image are changed.

VIVIX-S 1717NA / 1717NB (Wired)

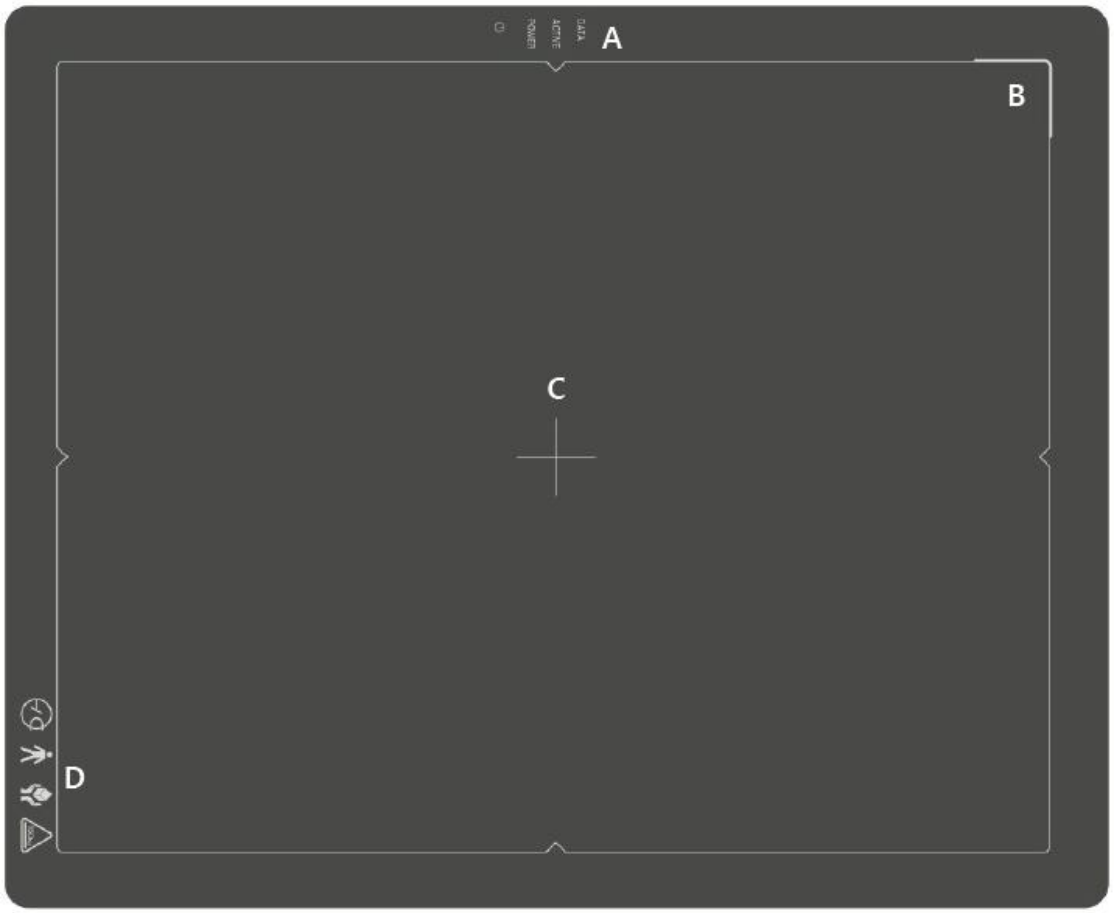

	Indication Info.	Description
A	**Status indication logo**	Indicates the operating state of detector. • DATA, ACTIVE, POWER
B	**Image starting point**	Indicates the starting point of an original image.
C	**Center of the detector**	Indicates the central position of detector.
D	**Certification logo**	Indicates certification logos relating to a medical device.

DRY

2.3.5 Wireless Communication

Item	Specifications
Wireless standard	IEEE802.11n
Frequency range	2.412 ~ 2.472㎓ (13 Channels) 5.18 ~ 5.24㎓ (4 Channels) 5.745 ~ 5.805㎓ (4 Channels)
Data transmission rate	802.11n: Max. 300Mbps (MIMO 2X2)
Modulation	BPSK, QPSK, 16-QAM, 64-QAM
Transmission power	Max. 17dBm
Security	WPA2-PSK
Antenna	Dual Band Antennas (2EA, inbuilt)

- The specification of detector and SCU are same, but the location of antenna is different.

2.3.6 Use Environment

Item	Operation	Storage & Transportation
Temperature	+10 ~ +35℃	-15 ~ +55℃
Humidity	30 ~ 85% (Non-condensing)	10 ~ 90% (Non-condensing)
Atmospheric pressure	700 ~ 1060 hPa	500 ~ 1060 hPa
Shock	1.6G	20G
Vibration	0.7G	0.7G

- The use environment of detector and SCU is same.

Load Limit of Detector

Uniform load	Local load
Over the whole surface	Center diameter 40mm
Max. 150 kg	Max. 100 kg
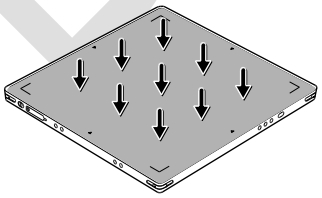	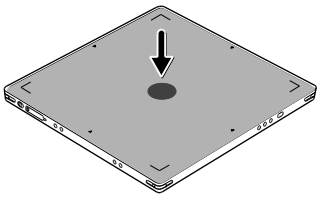

- Do not let the paitent or object heavier than load limit be on the detector. Then, detector can be damaged.
- Do not let the patient lie or get on the detector. Internal devices such as a sensor can be seriously damaged even if his/her weight is within the load limit.

DRAFT

2.4 SCU Basic (FXRS-02A)

SCU Basic synchronizes the image and X-ray signal as locating among the detector, workstation and the X-ray generator. You can use the SCU directly when the power supplies to SCU after connecting it under the **VIVIX-S 1717N** system environment.

2.4.1 Specifications

Item	Specifications
Model	• FXRS-02A
Power Supply	• Input: AC100 to 240V, 50/60Hz, Max. 2.0-0.8A • Output: DC +24V 3.25A, 78W
Cable Connection port	• Gigabit Ethernet ports (3ea) • Two(2) PoE (Power over Ethernet) ports
Dimension (H × W × D)	• 210.0 ㎜ × 300.0 ㎜ × 54.2 ㎜
Weight	• 2.5 kg

2.4.2 Drawing Sheet

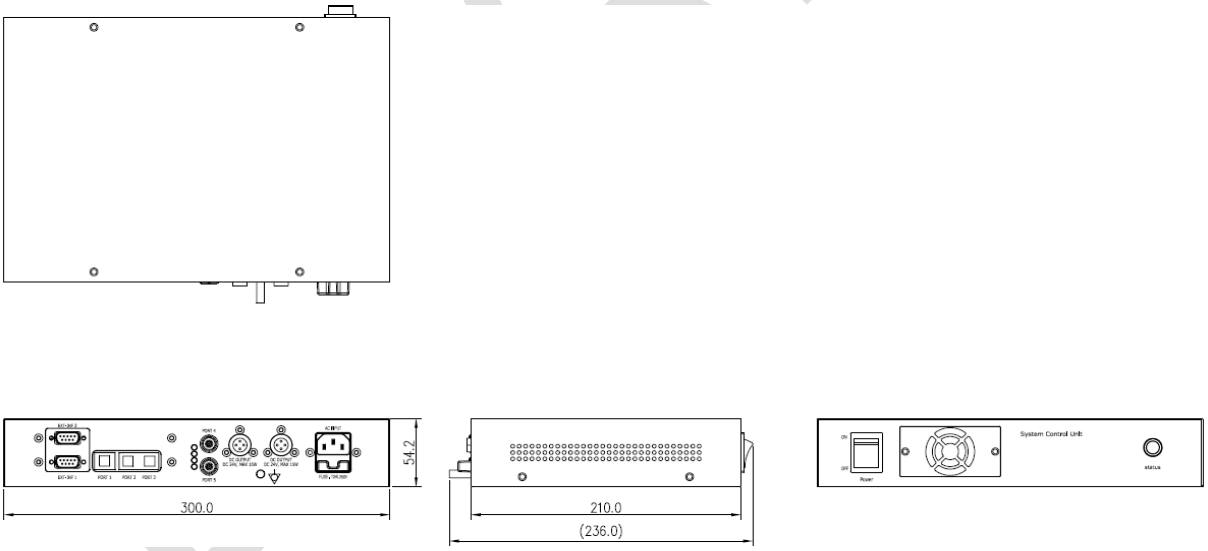

2.4.3 Functions

Front Side

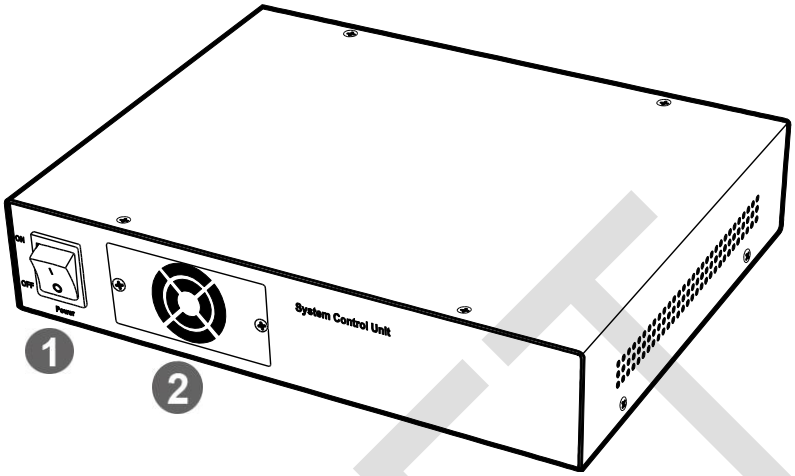

No.	Name	Description
1	**Power Switch**	SCU power swtich (ON or OFF) (Including green LED Lamp)
2	**Fan**	Expels interior air of SCU

Rear Side

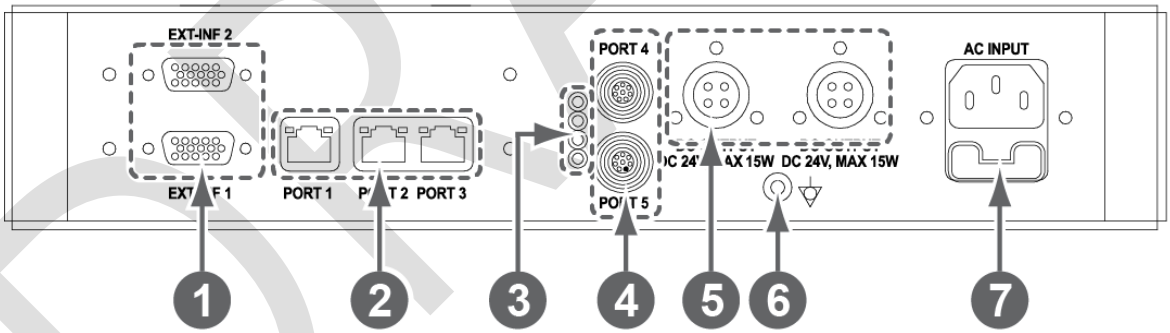

No.	Name	Description
1	**EXT_INF1** **EXT_INF2**	X-ray generator interface connector (D-SUB 15 pins x 2 EA, Female) • **EXT_INF1** : 1 ~ 15 • **EXT_INF2** : 16 ~ 30
2	**LAN port** **(Port 1, 2, 3)**	Gigabit Ethernet port (1000BASE-T) • **Port 1**: Communicates between workstation and SCU Basic. • **Port 2, 3**: Communicates between FXRD-1717S detector and SCU Basic when configuring multiple detectors.
3	**PoE status lamp**	Indicates the status of PoE port (Port 4, Port 5) • Green: 1 Gbps • Orange: 100 Mbps

DRAFT

4	**PoE port (Port 4, 5)**	PoE (Power over Ethernet) port (1000BASE-T) • Communicates between the detector and SCU Basic. • Supplies power to the detector.
5	**Detector power supply port**	Max. DC +24V/15W (2 ports) • For **FXRD-1717S** detector only.
6	**P.E**	Equipotential ground
7	**AC input port**	T2AL250V fuse (2 EA) • 100 ~ 240V • 50/60Hz • Supplies power to SCU Basic.

	• The P.E (Potential Equalization) port of SCU is used to maintain potential equalization between SCU and another grounded system. Use the conductor that can be detached without the use of a tool.

DRAFT

2.5 SCU Basic (FXRS-03A)

SCU Basic synchronizes the image and X-ray signal as locating among the detector, workstation and the X-ray generator. You can use the SCU Basic directly when the power supplies to SCU Basic after connecting it under the **VIVIX-S 1717N** system environment

2.5.1 Specifications

Item	Specifications
Model	• FXRS-03A
Power supply	• Input: AC100 to 240V, 50/60Hz, Max. 2.0-0.8A • Output: DC +24V 3.25A, 78W
Cable connection port	• Gigabit Ethernet port (3EA) • PoE (Power over Ethernet) Port (2EA)
Wireless communication	• IEEE 802.11n (2.4 ㎓ / 5 ㎓)
Dimension (H × W × D)	• 236.0㎜ × 300.0㎜ × 58.0㎜
Antenna	• 140㎜ (2EA, Dual band)
Weight	• 2.8 kg

2.5.2 Drawing Sheet

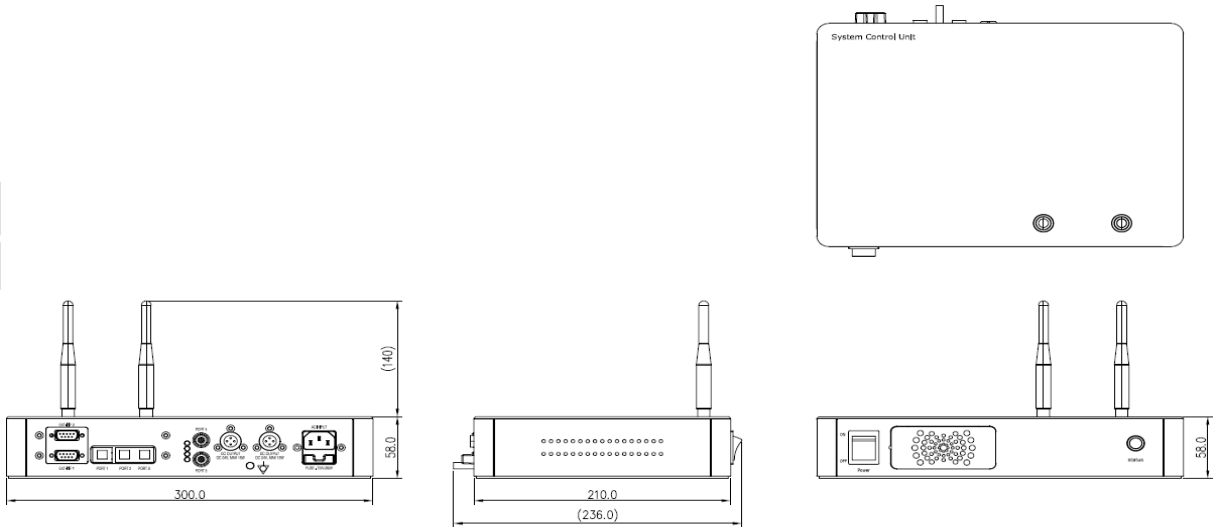

2.5.3 Functions

Front Side

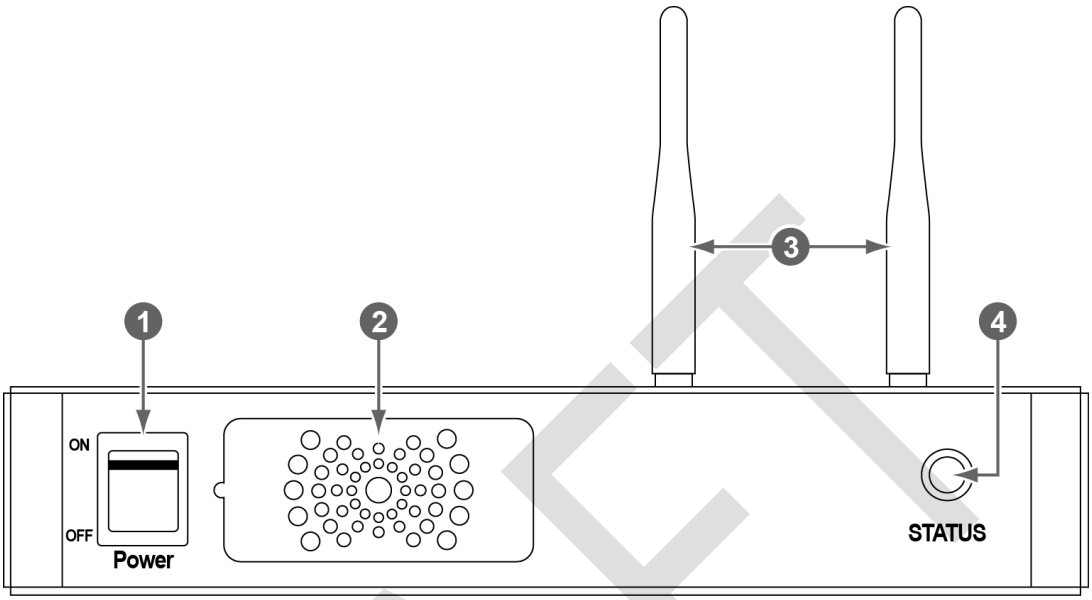

No.	Name	Description
1	**Power switch**	Turns on/off the power of SCU Basic. (Including Green LED Lamp)
2	**Fan**	Expels the air inside of SCU Basic.
3	**Antenna**	Assists communications between the detector and SCU Basic.
4	**Status LED**	Indicates the operation and connection status of SCU Basic. • Blinking green: Booting • Green: Completed to boot up • Blue: The software is connected and ready to communicate.

DRAFT

Rear Side

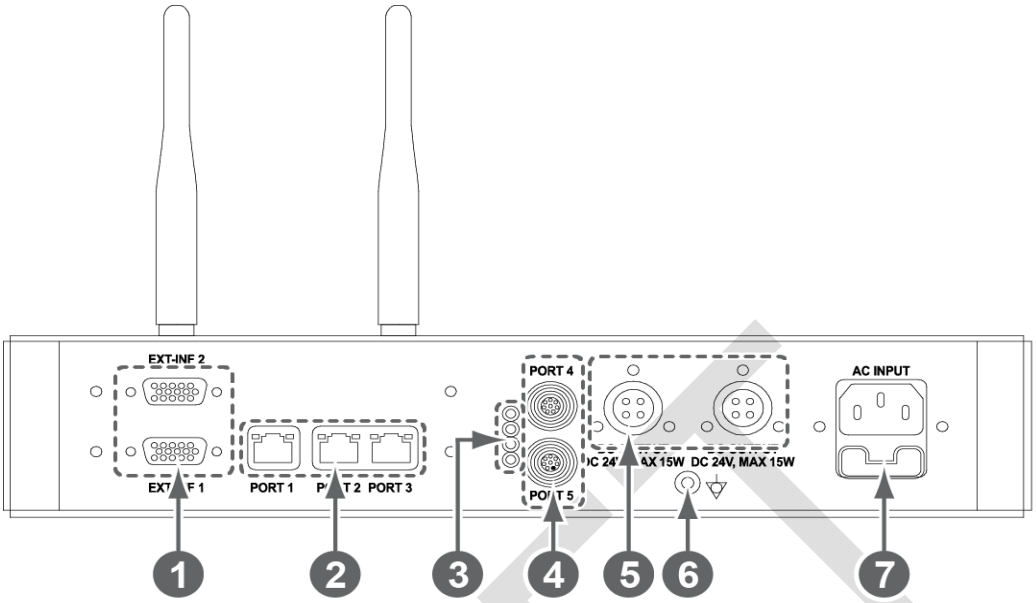

No.	Name	Description
1	**EXT_INF1** **EXT_INF2**	X-ray generator interface connector (D-SUB 15 pins x 2 EA, Female) • **EXT_INF1** : 1 ~ 15 • **EXT_INF2** : 16 ~ 30
2	**LAN port** **(Port 1, 2, 3)**	Gigabit Ethernet port (1000BASE-T) • **Port 1**: Communicates between workstation and SCU Basic. • **Port 2, 3**: Communicates between **FXRD-1717S** detector and SCU Basic when configuring multiple detectors.
3	**PoE status lamp**	Indicates the status of **PoE** port (Port 4, Port 5) • Green: 1 Gbps • Orange: 100 Mbps
4	**PoE port** **(Port 4, 5)**	**PoE** (Power over Ethernet) port (1000BASE-T) • Communicates between the detector and SCU Basic. • Supplies power to the detector.
5	**Detector power supply port**	Max. DC +24V/15W (2 ports) • For **FXRD-1717S** detector only.
6	**P.E**	Equipotential ground
7	**AC input port**	T2AL250V fuse (2 EA) • 100 ~ 240V • 50/60Hz • Supplies power to SCU Basic.

• The P.E (Potential Equalization) port of SCU is used to maintain potential equalization between SCU and another grounded system. Use the conductor that can be detached without the use of a tool.

DRAFT

2.6 SCU mini (FXRS-04A)

SCU mini synchronizes the image and X-ray signal as locating among the detector, workstation and the X-ray generator. You can use the SCU mini directly when the power supplies to SCU mini after connecting it under the **VIVIX-S 1717N** system environment

2.6.1 Specifications

Item	Specifications
Model	• FXRS-04A
Power supply	• Input: DC +24V 2A Max
Cable connection port	• Gigabit Ethernet port (3EA) • PoE (Power over Ethernet) Port (1EA)
Wireless communication	• IEEE 802.11n (2.4 ㎓ / 5 ㎓)
Dimension (H × W × D)	• 210.0㎜ × 170.0㎜ × 45.0㎜
Antenna	• 140㎜ (2EA, Dual band)
Weight	• 1.2kg

2.6.2 Drawing Sheet

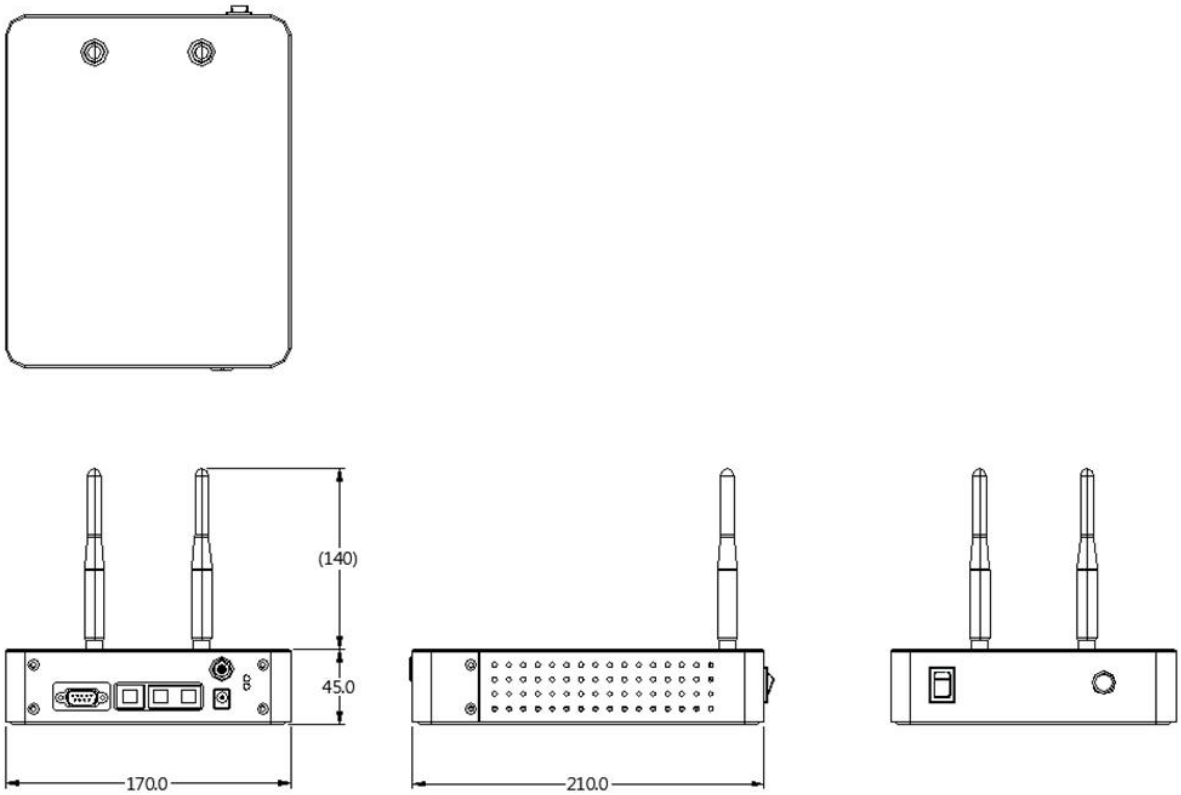

2.6.3 Functions

Front Side

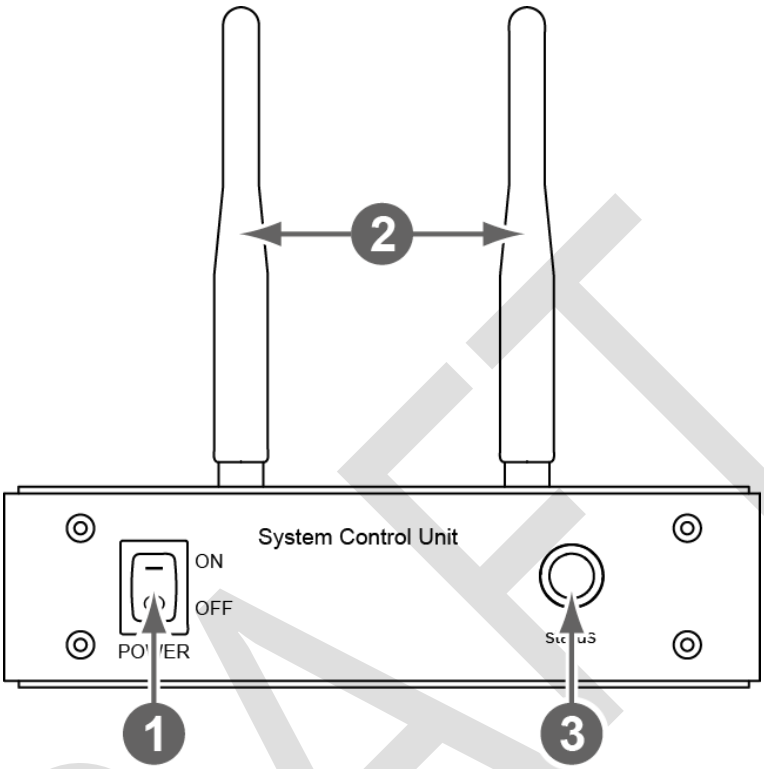

No.	Name	Description
1	**Power switch**	Turns on/off the power of SCU mini.
2	**Antenna**	Assists communications between the detector and SCU mini.
3	**Status LED**	Indicates status of SCU mini operation and connection. • Blinking green: Booting • Green: Completed to boot up • Blue: The detector is connected and ready to communicate.

DRAFT

Rear Side

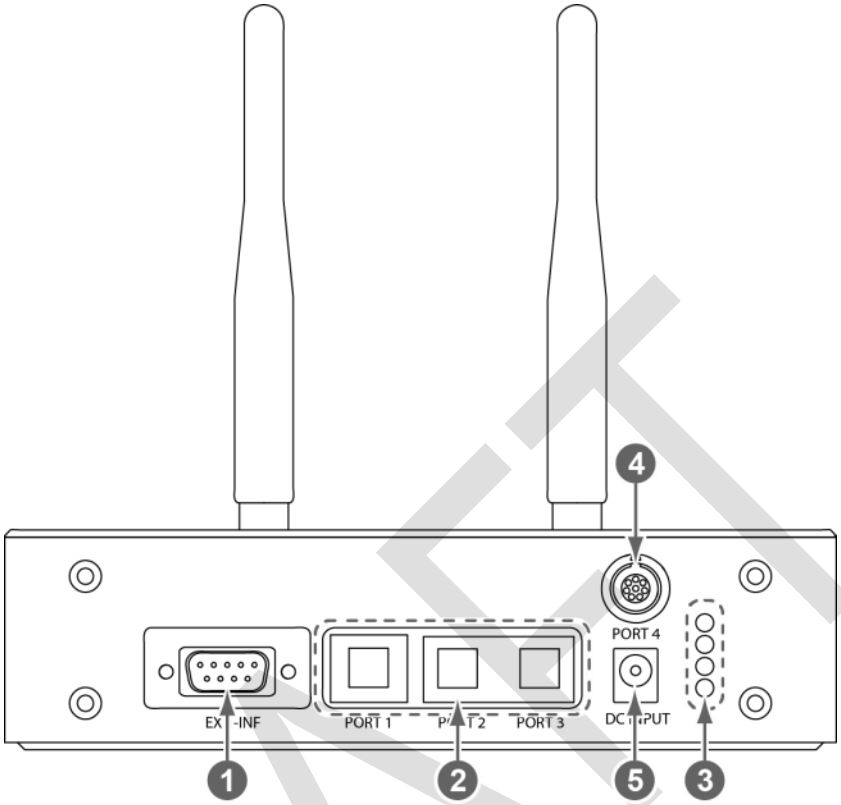

No.	Name	Description
1	**EXT_INF**	X-ray generator interface connector (D-SUB 15pin, Female)
2	**LAN port (Port 1, 2, 3)**	Gigabit Ethernet port (1000BASE-T) • **Port 1**: Communication between the workstation and SCU mini. • **Port 2, 3**: Communication between **FXRD-1717S** detector and SCU mini when configuring multiple detectors.
3	**PoE status lamp**	Indicats the status of **PoE** port. • Green: 1 Gbps • Orange: 100 Mbps
4	**PoE port**	**PoE** (Power over Ethernet) port (1000BASE-T) • Communication between the detector and SCU mini. • Supplies power to the detector.
5	**DC power input port**	DC +24V • Supplies power to SCU mini.

DRAFT

2.7 Battery Pack

2.7.1 Specifications

Item	Specifications
Model	FXRB-02A
Type	Lithium Ion
Rated Power Supply	Output: DC +7.6V
Capacity	3,100mAh
Number of cell	2S1P (2 Series 1 Parallel)
Life	Approx. 500 times (Fully charged/Discharged completely, 1cycle)
Dimension (H × W × D)	160.0 mm × 61.8 mm × 5.7 mm
Weight	115g

2.7.2 Drawing Sheet

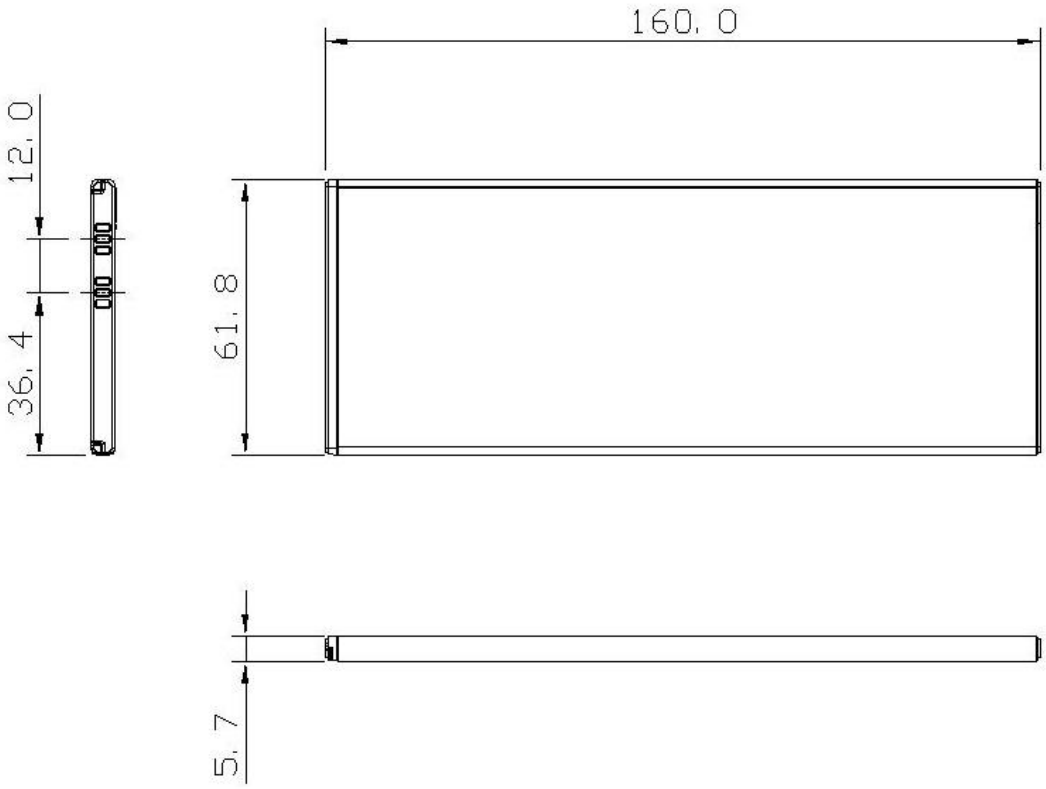

2.8 Battery Charger

2.8.1 Specifications

Item	Specifications
Model	FXRC-02A
Simultaneous Charging	2 battery packs
Charging time	3 hours
Rated power supply	DC +24V, 2A Max.
Dimension (H × W × D)	192.0 ㎜ × 101.0 ㎜ × 26.0 ㎜
Weight	0.8 kg

2.8.2 Drawing Sheet

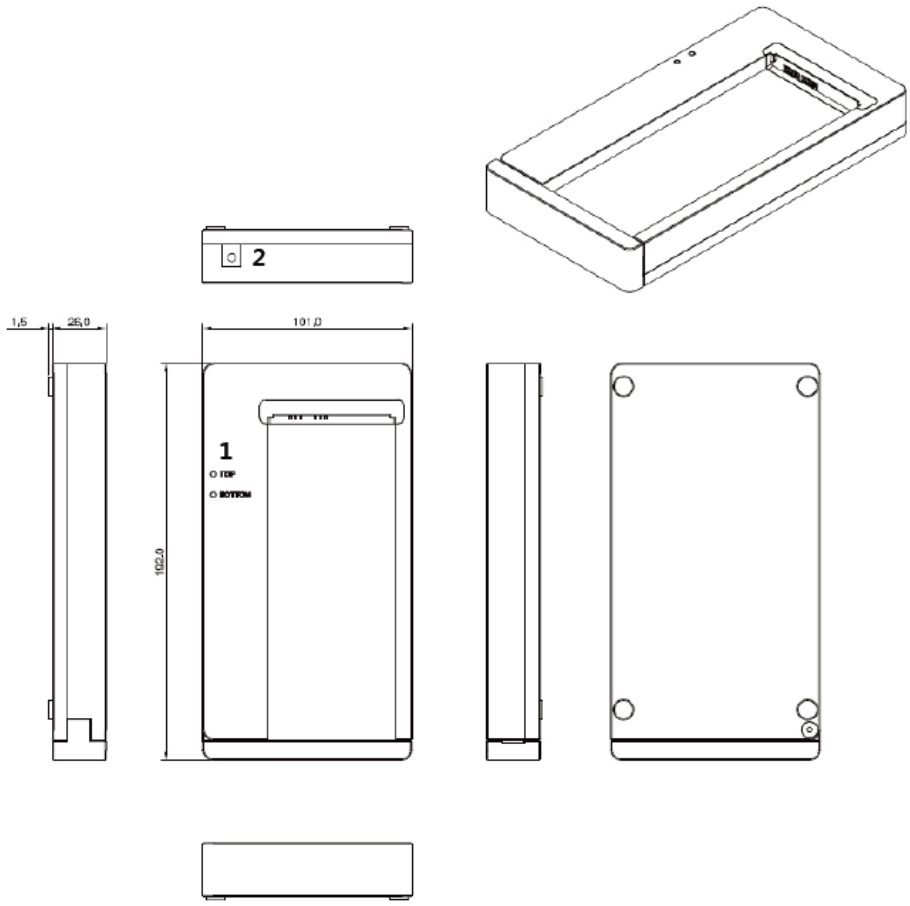

No.	Name	Description
1	**Top / Bottom LED**	Indicates the position and status of a battery being charged.
2	**Power input port**	Supplies electric power by connecting a power adapter to the battery charger.

2.9 Others

2.9.1 X-ray Generator (Recommended Exposure Condition)

Item	Recommended condition
X-ray energy range	• 40kVp ~ 150kVp
Reliability (Lifetime Dose)	• 74Gy or higher (35 uGy x 365days x 24hrs x 60min. x 60sec. / 15sec.)

2.9.2 Recommended Specifications of Workstation (PC)

Item	Recommended specification
Operating System	• VIVIX Setup ▫ Microsoft Windows 7 (32bit / 64bit) ▫ Microsoft Windows 7 64bit SP1 (Professional Edition or higher) ▫ Microsoft Windows Vista Service pack 1 or higher (32bit / 64bit) ▫ Microsoft Windows 8 (32bit / 64bit) / 8.1 64bit SP1 (Professional Edition or higher ▫ Microsoft Windows 8.2 (32bit / 64bit)
CPU	• Intel Core i5 2600 or higher (or compatible CPU)
Memory	• 4GB or higher
Hard Disk	• 1TB or higher
LAN Card (only for detector communication)	• Gigabit (for detector only) • Intel® PRO 1000 Series (Gigabit LAN Card for network interface) • Min.requiremetns ▫ Speed: 1Gbps or more ▫ Jumbo Frames: 9K • Receive Descriptors: 2K (1024 or higher)
Monitor	• 1024 x 768 or more
CD-ROM	• CD or DVD R/W

2.9.3 Recommended Specifications of Grid

Item	Recommended specification
SID	• 100cm / 130cm / 150cm / 180cm
Size	• 451mm x 365mm x 1.5mm
Ratio	• 8.1 / 10:1 / 12:1
Frequency	• 215 line/inch
INTER SPACER	• AL

• Check the recommended specifications by Vieworks first before buying the generator, workstation and grid.

DRAFT

3. System Configuration

This section gives information about the various connection / configuration ways among the detector, SCU, workstaton and X-ray generator.

You can figure out the most suitable way of system configuration through this instruction.

Detector Connection Method

Diagram

System Configuration

Generator Interface

DRAFT

3.1 Detector Connection Methods

You can organize wired or wireless connection between the **VIVIX-S 1717N** detector and **SCU**. You can also choose other connection ways suitable for the use environment in case of need.

3.1.1 Wireless Connection

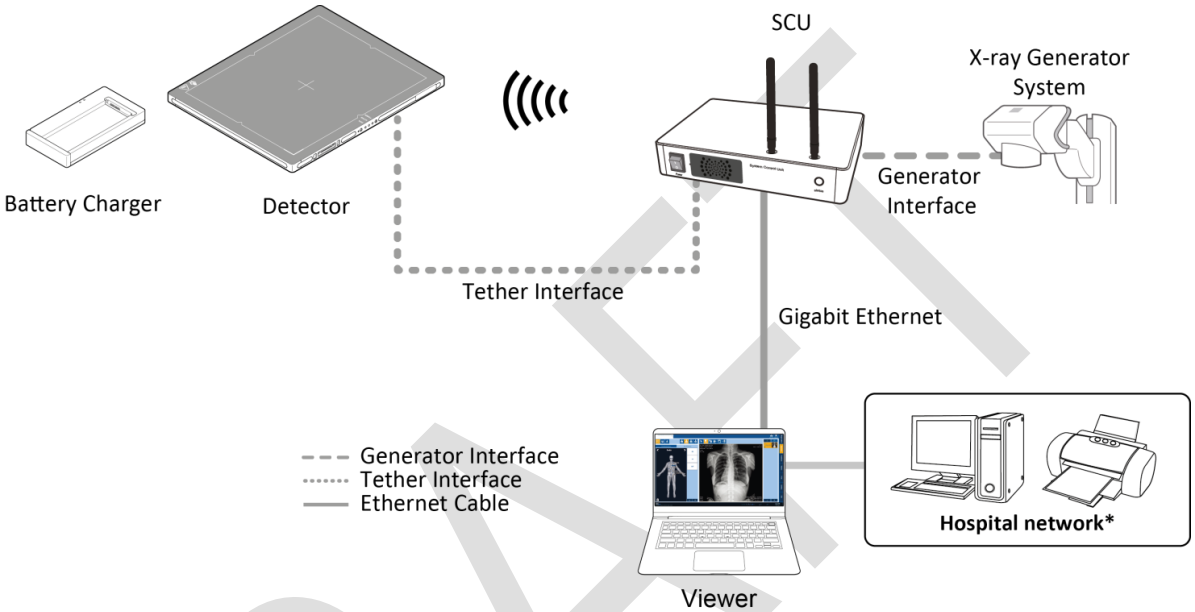

- The images and data are transmitted between the **VIVIX-S 1717N** detector and **SCU** by wireless connection.
  - A battry pack should be installed in the detector to use it under the wireless configuration.

- We recommend you to use the wireless connection method for the following cases.
  - When using the unfixed detector.
  - When the wired communication is in trouble by the interruption of cables.
- The wireless connection is more freely to operate than the wired connection.
- Use the wireless connection with a laptop computer to enhance mobility.

- Be sure to operate the wireless commnunication between the detector and SCU within a maximum of **8m**.
- Use of multiple WLAN devices within the same frequency band may interfere with each wireless communication and cause a decline in transmission speed.
- Do not cover or block the wireless module of the detector. Also, do not put any shielding materials between the detector and SCU. Otherwise, the transmission speed or operable distance may be reduced.

DRAFT

3.1.2 Wired Connection

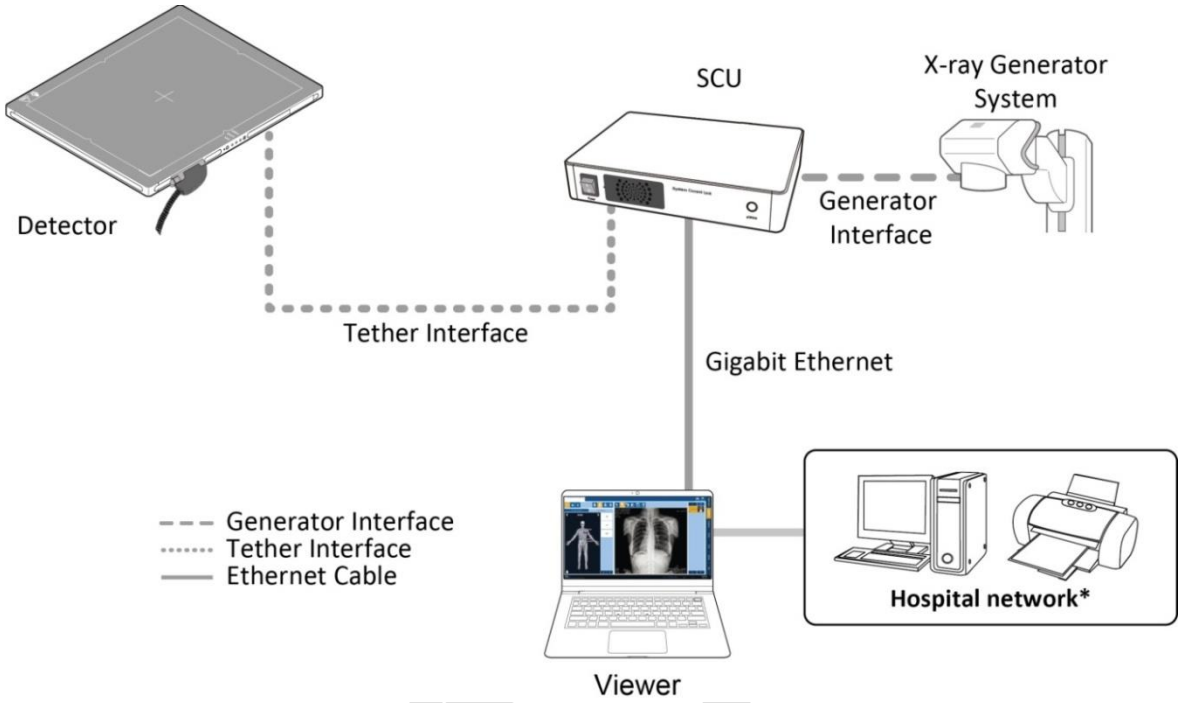

- Connect **VIVIX-S 1717N** detector and **SCU** with a tether interface cable to make a wired configuration.
  - As the tether interface cable supplies power to the detector, a battery pack is not needed to be installed in the detector.

- We recommend you the wired connection method for the following cases.
  - When continuous power supply to the detector is needed.
  - When the detector is fixed in a bucky stand or on a table.
  - When you upgrade the detector firmware or change the inner configural information.
  - When you need the data communication to be faster than the wireless connection.
- A battery pack in the detector keeps charging under the wired connection.
- The wireless communication module of the detector maintains inactivation status.

3.2 Diagram

3.2.1 Block Diagram

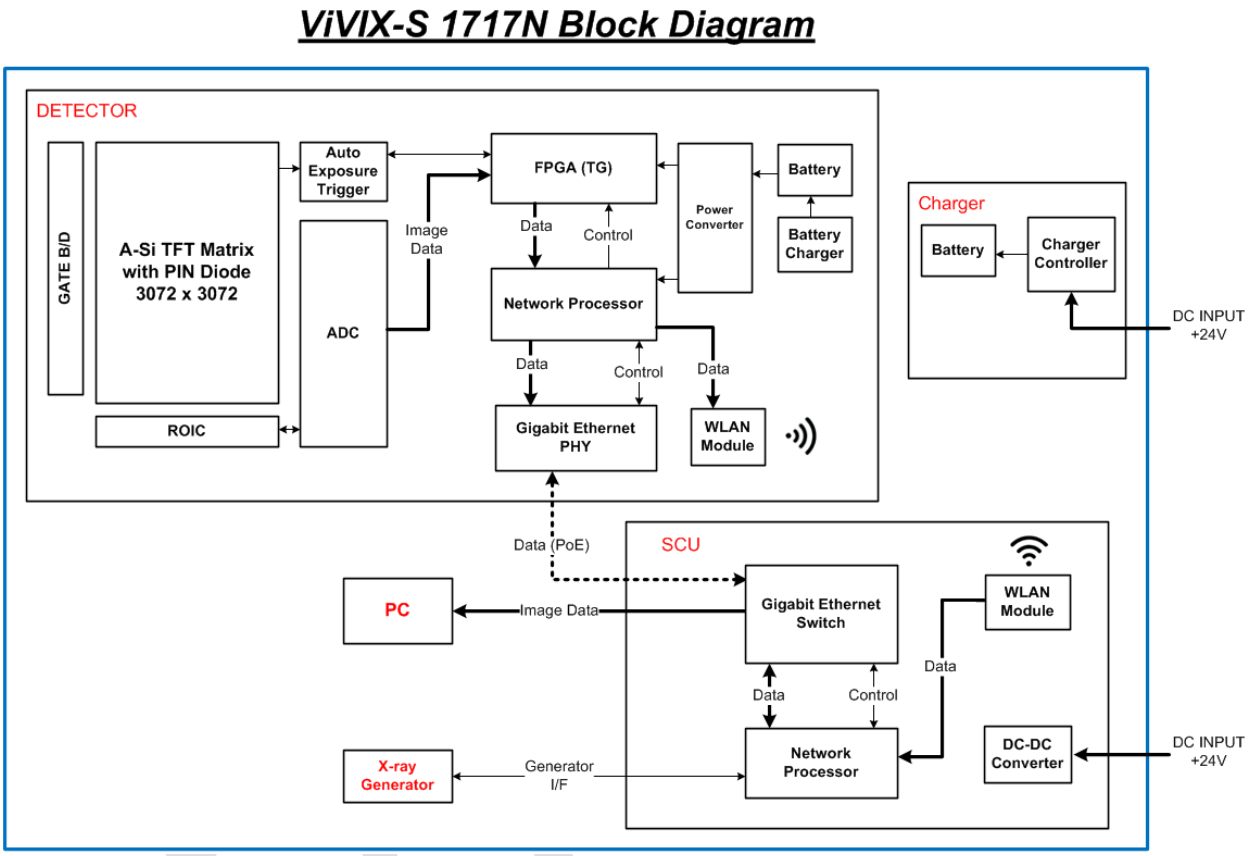

3.2.2 Wiring Diagram

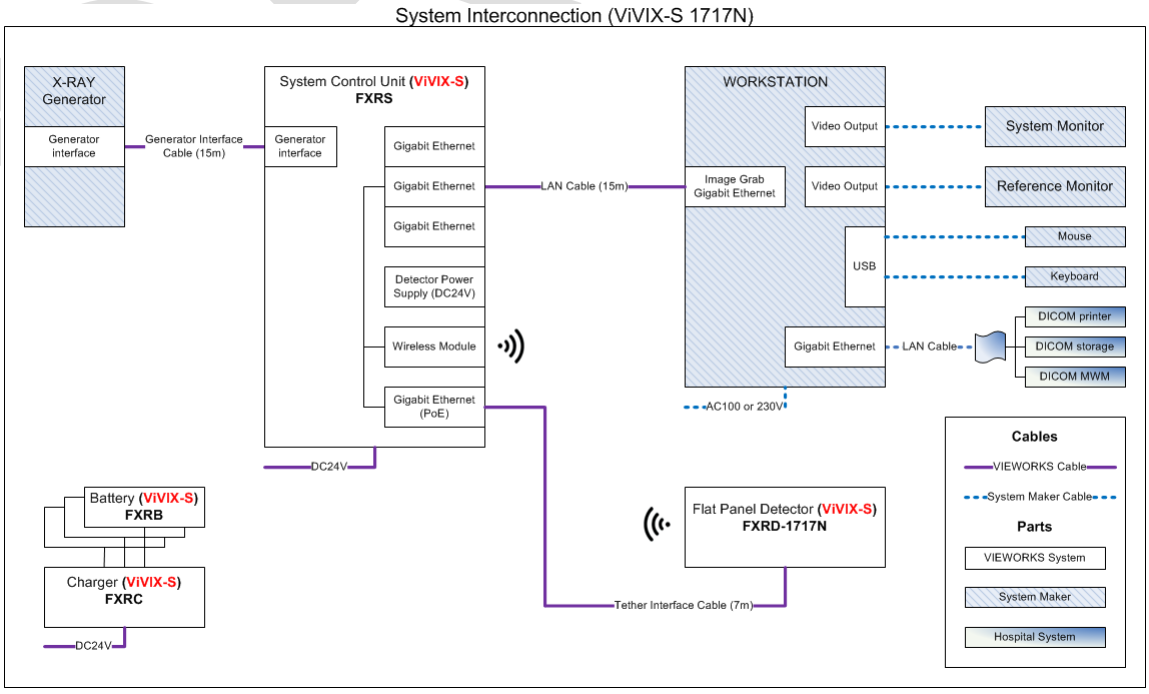

3.3 System Configuration

This section gives information about the configuration modes of **VIVIX-S 1717N** detector, SCU, workstation and the generator.

3.3.1 AP Mode (SCU AP Mode)

SCU AP mode is the wireless connection method that connecting the detector with **SCU** as the center wirelessly.

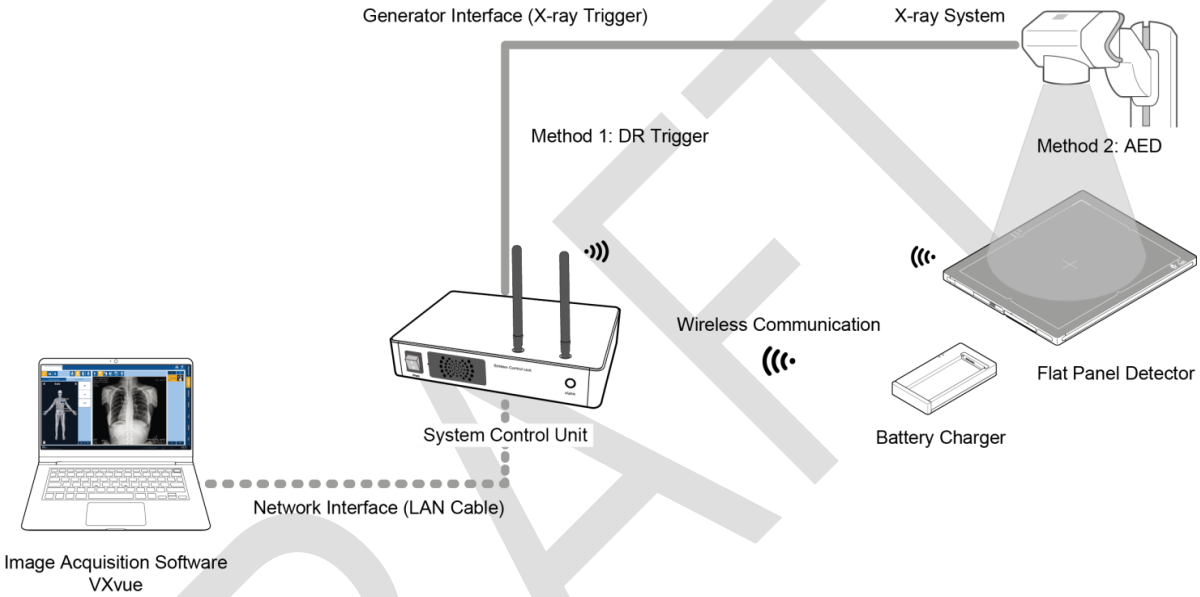

SCU & Detector

- The **VIVIX-S 1717N** detector and SCU are connected wirelessly. In this case, SCU and the detector operate as **AP** (Access Point) and **STATION** respectively.

SCU & PC (Workstation)

- SCU and PC (Workstation) are connected with the LAN cable.

> - It is available to connect SCU and PC wirelessly. In this case, SCU and the detector operate as **AP** (Access Point) and **STATION** respectively.

SCU & Generator

- SCU and the generator can be connected with the generator interface cable.

> - It is unnecessary to connect SCU and the generator with a generator interface cable if you use AED mode of the detector.

DRAFT

3.3.2 Tether Interface Mode

Tether interface mode is the wired connection method that connecting the detector with SCU as the center.

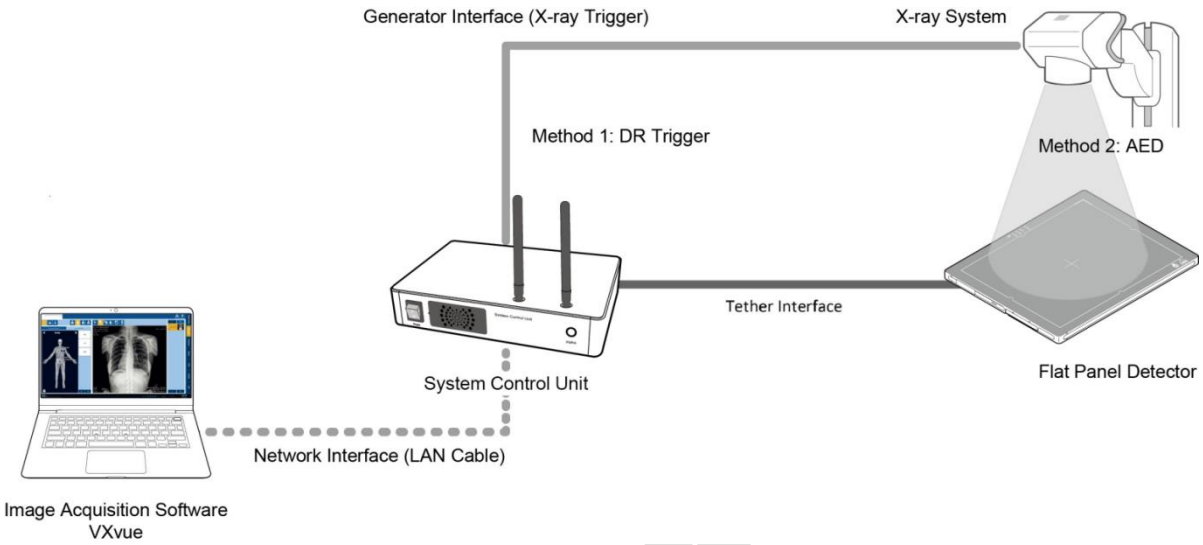

SCU & Detector

- SCU and the **VIVIX-S 1717N** detector are connected with the tether interface cable.

- Other connection ways of the tether interface mode are the same as the AP mode.

DRAFT

3.3.3 External AP Mode

External AP mode is the wireless connection method that adding the external AP device instead of SCU.

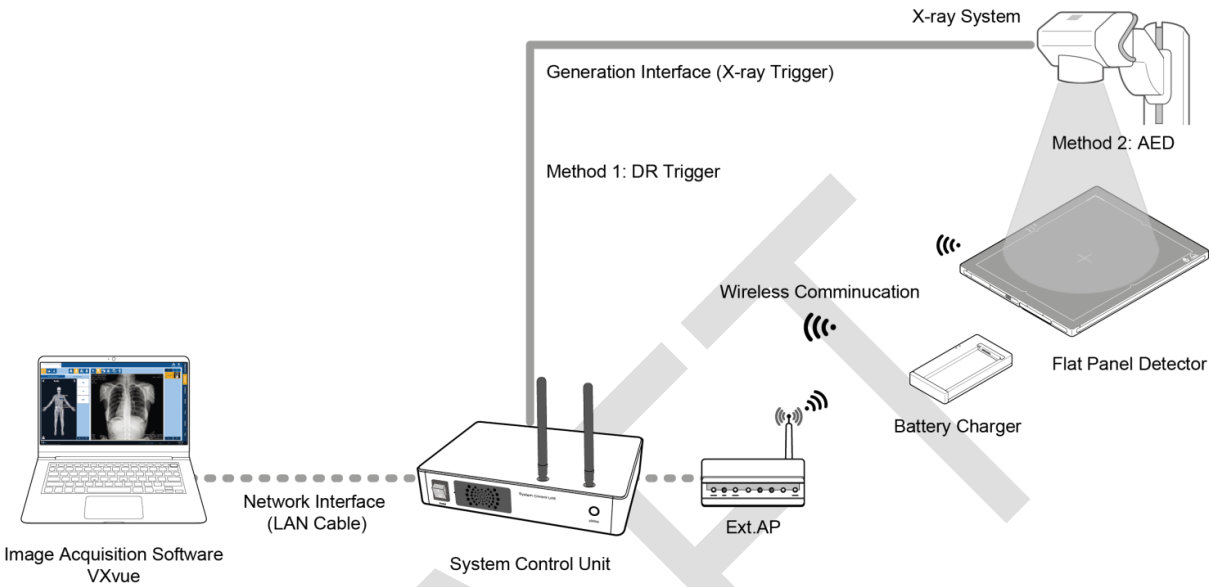

External AP & SCU

- The external AP and SCU are connected with a LAN cable.

External AP & Detector

- The external AP and **VIVIX-S 1717N** detector are connected wirelessly. In this case, the external AP and the detector operate as **AP** (Access Point) and **STATION** respectively.

- Other connection ways of the tether interface mode are the same as the AP mode.

- Be sure to check the specifications of external AP device when configuring the external AP mode, since the wireless communication performance can be different by the specifications.

DRAFT

3.3.4 Detector AP Mode

Detector AP mode is the wireless connection method that connecting the PC (Workstation) with the detector as the center wirelessly.

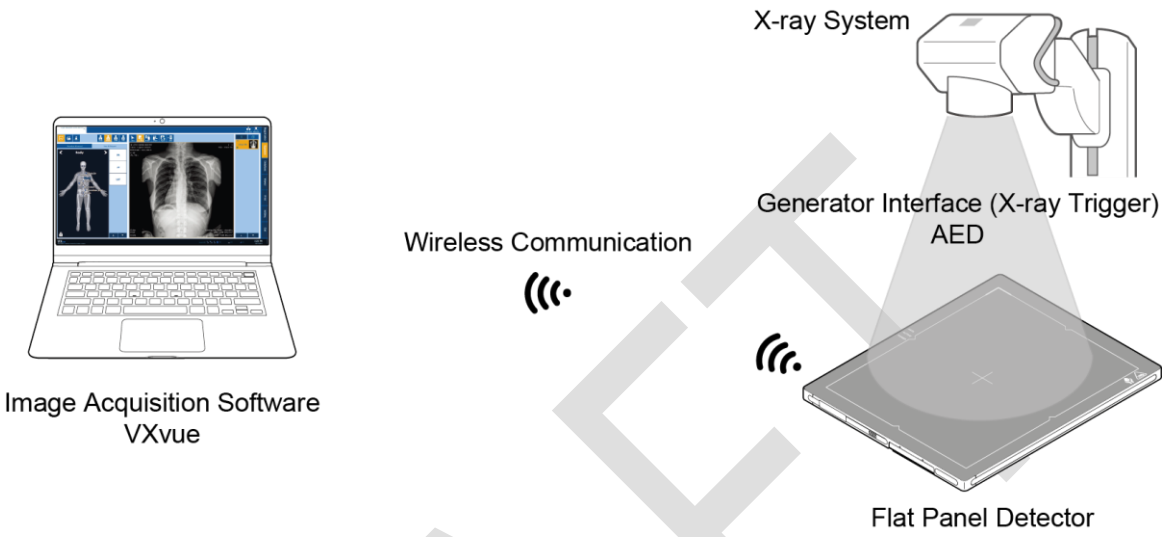

Detector & PC (Workstation)

- The **VIVIX-S 1717N** detector and PC are connected wirelessly. In this case, the detector and the PC operate as **AP** (Access Point) and **STATION** respectively.

	• Since SCU is not used for configuring the detector AP mode, you can only use the **AED** mode without a wired connection. (Cannot use the **DR Trigger** mode.) • This mode can be used when mobility and portability are needed.

	• When configuring the detector AP mode, be sure to check the specifications of wireless module installed in the PC. The wireless communication performance can be different depending on the specifications of the wireless module. • If the wireless connection cannot be made normally because of unexpected problems, SCU can be needed to check the detector condition.

DRAFT

3.3.5 Detector Stand-Alone Mode

You can use the **Stand-Alone** mode without making a wired or wireless connection.

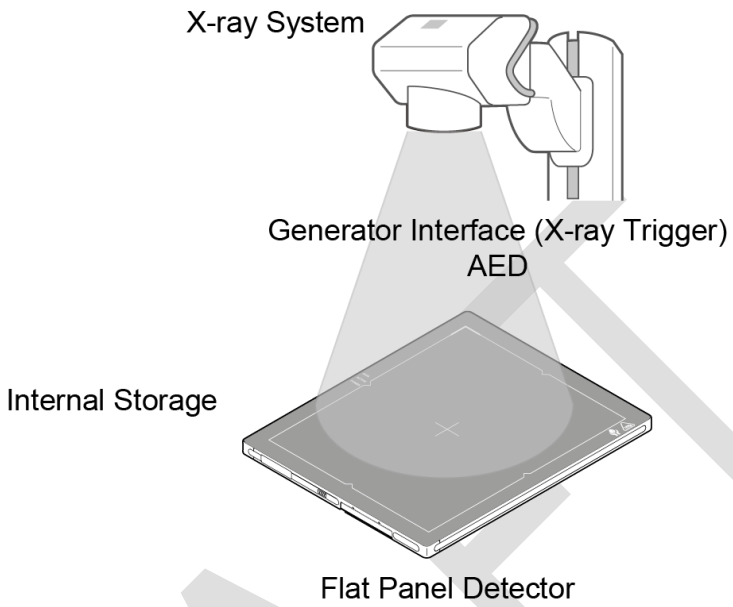

- You should take images with the **AED** mode only when using the **Stand-Alone** mode. (Cannot use the **DR Trigger** mode.)
- The acquired images are stored in the internal storage of the detector in order and the images can be transmitted to the PC after connecting the detector to the PC.
- The transmitted images are removed automatically from the detector.

DRAFT

3.4 Generator Interface

VIVIX-S 1717N detector provides **DR Trigger** interface and **AED** interface as a generator interface way to acquire images by detecting X-ray.

Interface	Description
AED	The detector detects X-ray exposure from the generator automatically and then performs image acquisition without any cable connection.
DR Trigger	The detector and generator receive and send their signal to each other for image acquisition. SCU and X-ray generator should be connected with the generator interface cable.

3.4.1 AED (Auto Exposure Detection) Interface

If the **VIVIX-S 1717N** detector is used as the **AED** interface, you can acquire images without connecting the generator to the detector with a generator interface cable.

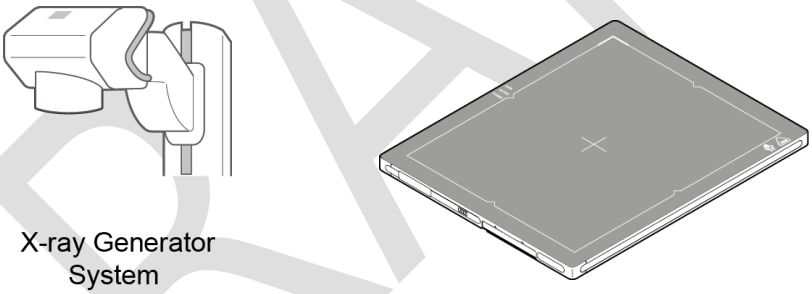

Cautions when using AED interface

- Make sure to follow the operating environmental condition (Temp: +10℃ ~ +35℃).
- Do not give impact to the product. If it receives strong jolt, unwanted images may be acquired without the X-ray exposure because of the malfunction of the **AED** sensor.
- You may not acquire images or horizontal artifacts may occur depending on the external environment such as exposure condition, thickness of object or the use of grid.
- When you set X-ray exposure area to the direction of the detector, the center of the detector should be involved in the X-ray exposure area. Otherwise, you may not acquire an image.

DRAFT

3.4.2 DR Trigger Interface

Connect the detector and X-ray generator with a generator interface cable, and then acquire images by sending and receiving their signal.

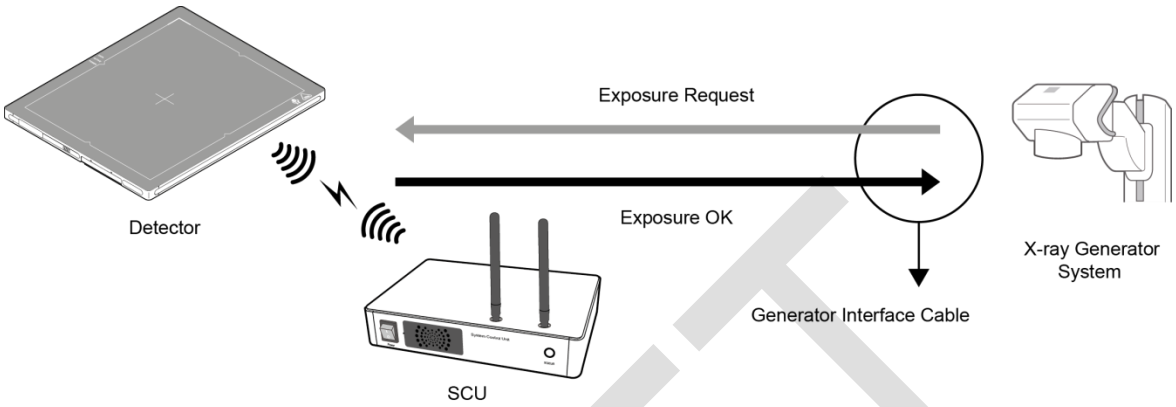

Signal Processing Steps

1 The detector receives **EXP_REQ** signal from the X-ray generator.
2 After the detector completes to prepare image acquisition, it sends the **EXP_OK** signal to the X-ray generator.
3 The X-ray generator confirms **EXP_OK** signal and generates X-rays.
4 The detector acquires images and then transmits the image data.

- **EXP_REQ** is a sending signal from X-ray generator to the detector for requesting exposure.
- **EXP_OK** is an exposure ready signal from the detector to X-ray generator.

DRAFT

3.5 Configuring DR Trigger Interface

To configure the **DR Trigger** interface, SCU and the generator should be connected with a generator interface cable. Connect the one end of generator interface cable to **EXT_INF** port of SCU, and then connect the other end to the generator.

- Up to three generators can be connected with SCU Basic.
- Only one generator can be connected with SCU mini.

3.5.1 Trigger Interface Way

The generator interface cable is connected differently depending on the of trigger interface ways.

Trigger Interface	Description
Packet Trigger	Handles exposure signal by exchanging packet.
Line Trigger	Handles exposure signal by exchanging electrical signal.

3.5.2 Packet Trigger

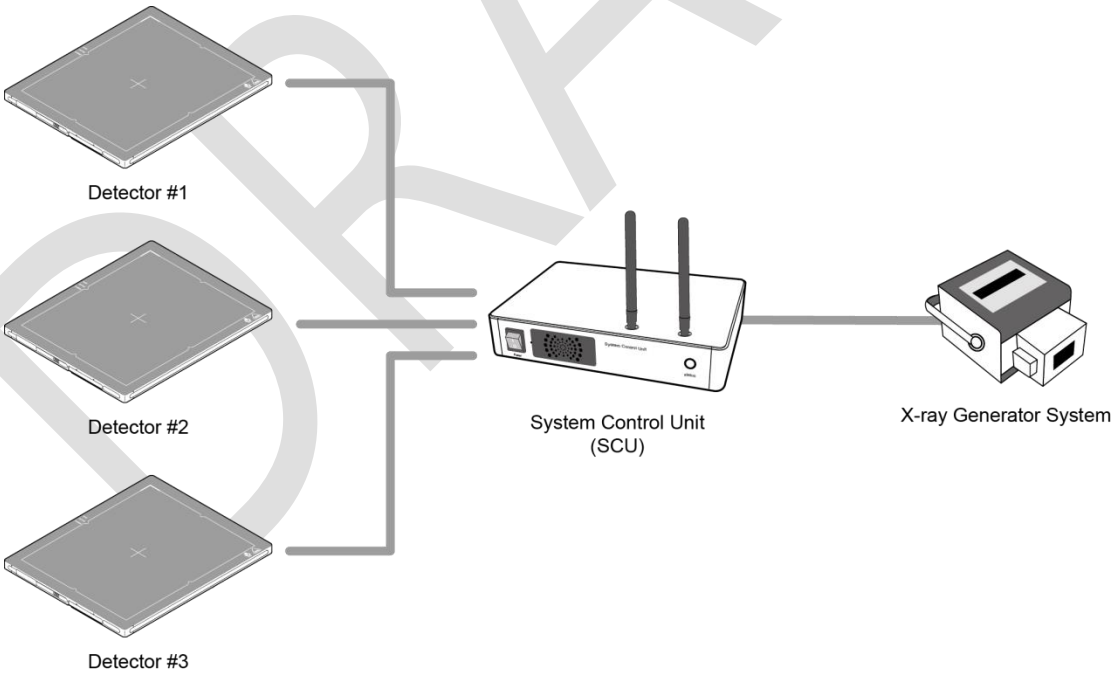

- Multipe detectors share one generator signal together.
- Connect a generator interface cable to one of the pin groups.
- The generator tramsmits and receives signal with the one selected detector for taking images.

DRAFT

3.5.3 Line Trigger

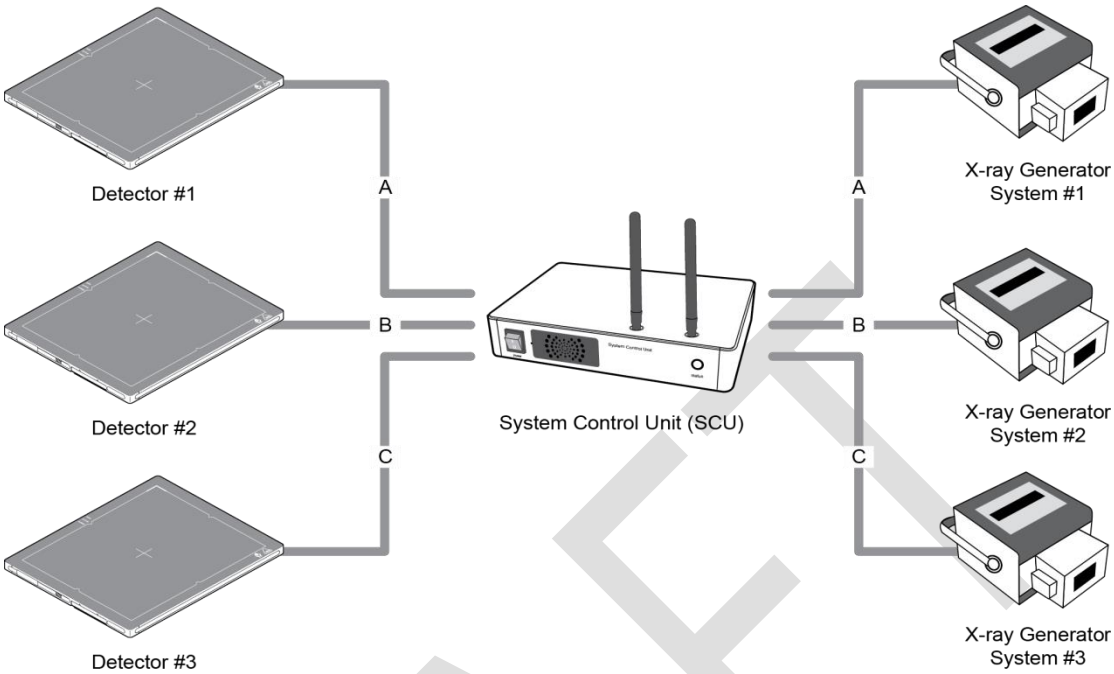

- Each detector shares a signal signal by being connected with generators separately.
- Up to three X-ray generators can be connected to SCU.
- The connection of each detector and generator can be configured from **VIVIX Setup**.

- You should comprehend about a detector and X-ray generator to make correct exposure. Otherwise, X-ray can be exposed to the detector in different location.
- The engineer who understand the generator device and interface technology should be in charge of interface work between SCU and the generator.

DRAFT

3.5.4 EXT_INF Port Pin Map

EXT_INF port is D-SUB 15 pin female connectors of SCU, and used for the generator interface.

Product	EXT_INF port
SCU Basic (FXRS-03A)	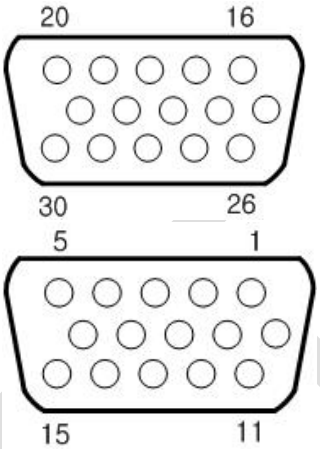
SCU mini (FXRS-04A)	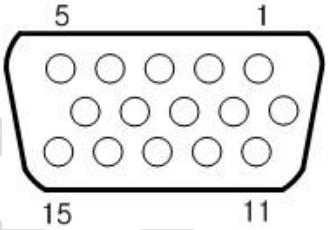

EXT_INF1 port pin map definition (1 ~ 15)

No.	Signal name	I/O	Type	Color	Ch.	Description
1	**EXP_REQ+_A**	Input	Contact	Red	A	Receives EXP_REQ
2	**EXP_REQ-_A**	Input	Contact	Black	A	Returns signal from EXP_REQ+_A
3	**EXP_REQ_TTL_A**	Input	TTL	Orange	A	Receives EXP_REQ
4	**EXP_REQ_GND_A**	Input	TTL	Gray	A	Returns signal from EXP_REQ_TTL_A
5	**EXP_OK_POWER_A/B**	Input	-	Yellow	A/B	Power of TTL signal
6	**EXP_OK+_A**	Output	-	Green	A	Sends EXP_OK
7	**EXP_OK-_A**	Output	-	Brown	A	Returns signal from EXP_OK+_A
8	**EXP_OK+_B**	Output	-	Blue	B	Sends EXP_OK
9	**EXP_OK-_B**	Output	-	Pink	B	Returns signal from EXP_OK+_B
10	**Reserved**	-	-	-	-	Reserved for test only.
11	**EXP_REQ+_B**	Input	Contact	White	B	Receives EXP_REQ
12	**EXP_REQ-_B**	Input	Contact	Purple	B	Returns signal from EXP_REQ+_B
13	**EXP_REQ_TTL_B**	Input	TTL	White/Red	B	Receives EXP_REQ
14	**EXP_REQ_GND_B**	Input	TTL	White/Black	B	Returns signal from EXP_REQ_TTL_B
15	**Reserved**	-	-	-	-	Reserved for test only.

DRAFT

EXT_INF2 port pin map definition (16 ~ 30)

No.	Signal name	I/O	Type	Color	Ch.	Description
16	**EXP_REQ+_C**	Input	Contact	Red	C	Receives EXP_REQ
17	**EXP_REQ-_C**	Input	Contact	Black	C	Returns signal from EXP_REQ+_C
18	**EXP_REQ_TTL_C**	Input	TTL	Orange	C	Receives EXP_REQ
19	**EXP_REQ_GND_C**	Input	TTL	Gray	C	Returns signal from EXP_REQ_TTL_C
20	**EXP_OK_POWER_C**	Input	-	Yellow	C	Power of TTL signal
21	**EXP_OK+_C**	Output	-	Green	C	Sends EXP_OK signal
22	**EXP_OK-_C**	Output	-	Brown	C	Returns signal from EXP_OK+_C
23	**EXT_W+**	Input	Contact	-	-	User-defined Pin 1
24	**EXT_W-**	Input	Contact	-	-	Returns signal from EXT_W+
25	**EXT_X+**	Input	Contact	-	-	User-defined Pin 2
26	**EXT_X-**	Input	Contact	-	-	Returns signal from EXT_X+
27	**EXT_Y+**	Input	Contact	-	-	User-defined Pin 3
28	**EXT_Y-**	Input	Contact	-	-	Returns signal from EXT_Y
29	**EXT_Z+**	Input	Contact	-	-	User-defined Pin 4
30	**EXT_Z-**	Input	Contact	-	-	Returns signal from EXT_Z+

- Since SCU mini has **EXT_INF 1** port, only one generator can be connected with.

- Up to three X-ray generators can be connected to **EXT_INF1** and **EXT_INF2** ports, and each generator should be connected with a same channel.

- There are **Contact** type (OPEN/ CLOSE) and **TTL** type (ON/ OFF) on the signal in/output pin.
- TTL type information
  - ON : VCC
  - OFF : GND
  - Current: 5 mA ~ 10 mA
  - Voltage: 12 V ~ 24 V

- When you plan to add interface using a user-defined pin, contact to the person in charge of Vieworks.

DRAFT

3.5.5 Input / Output Circuit

Exposure Request Input Circuit (EXP_REQ)

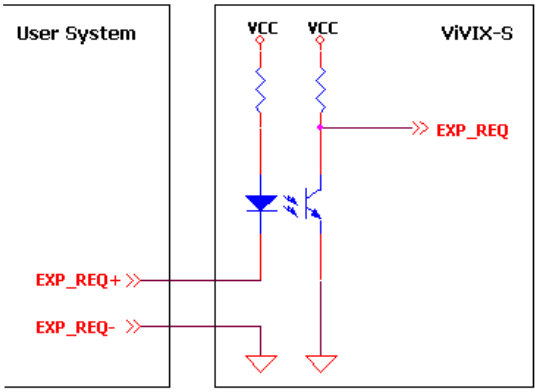

<Contact Type>

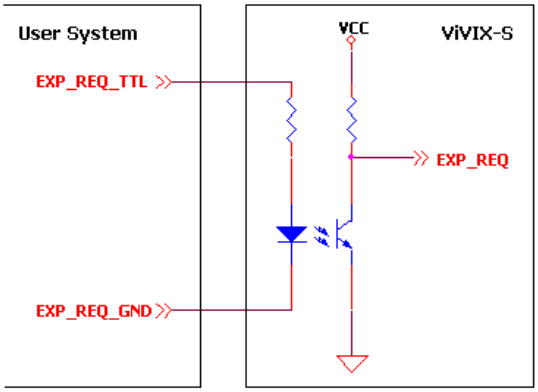

<TTL Type>

Exposure Respond Output Circuit (EXP_OK)

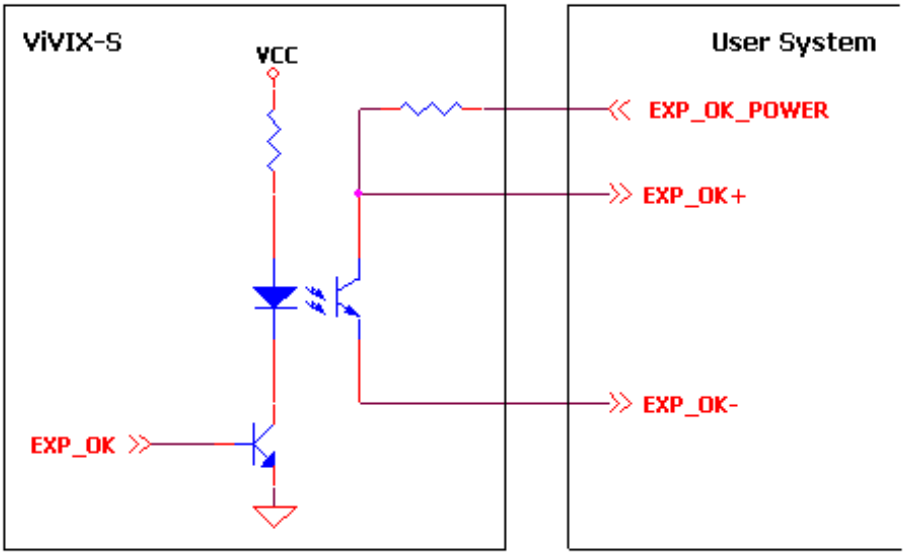

4. Installation

This section gives information about the installation process and method to use a detector.

Battery Pack

Product Installation

Generator Connection

Software Installation

Windows Environment Setting

DRAFT

4.1 Battery Pack

- Detector and its attached devices should be installed by an authorized service engineer.
- If you encounter any problems, consult the sales representative in Vieworks or a relevant engineer.

4.1.1 How to insert a battery pack

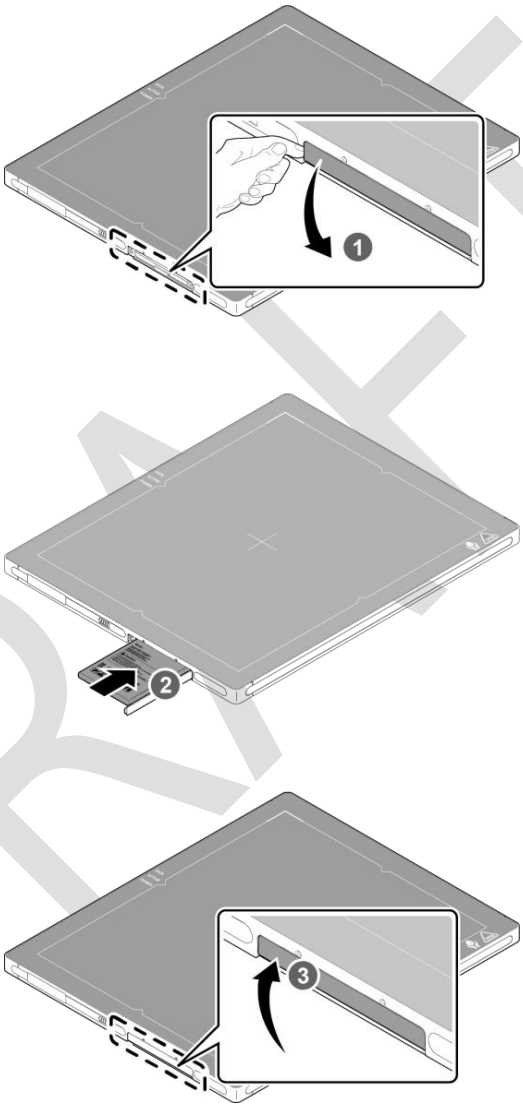

1 Open the battery cover.
2 Insert a battery into a slot until it clicks and push the lever to the right for fixing the battery.
3 Close the battery cover.

- Check if the battery is fully charged before using.
- Make sure that the battery pack is securely inserted.
- The remaining battery can be checked from the battery lamp on the side of detector or from the **VIVIX Setup** program.

DRAFT

4.1.2 How to take out a battery pack

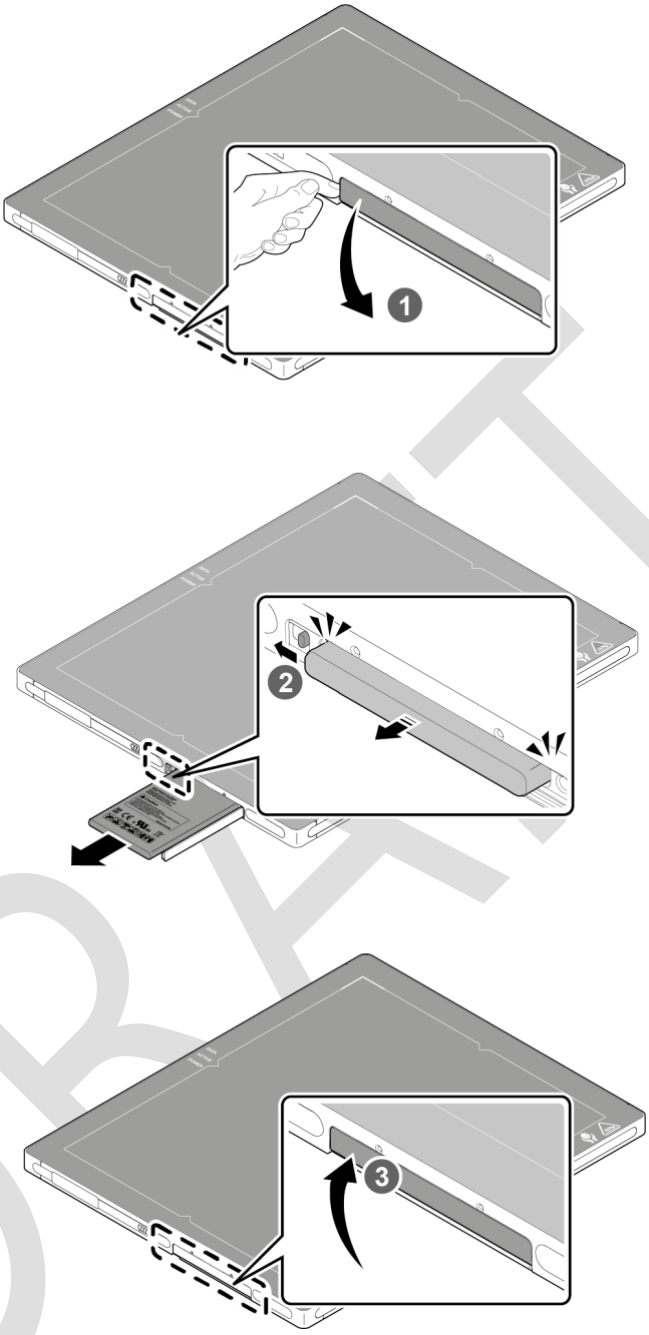

1 Open the battery cover.
2 Push the lever to the left for taking out the battery.
3 Close the battery cover.

- Make sure to turn off the detector by pressing and hold the power button for 3 seconds before detaching a battery pack. All status LED lamps are off and then the detector is turned off.

DRAFT

4.1.3 How to charge a battery pack

The detector is battery-operated when it is connected wirelessly. Charge the battery pack fully before inserting it to the detector.

Charging type 1

Supply power to the charger with the power adapter before charging a battery.

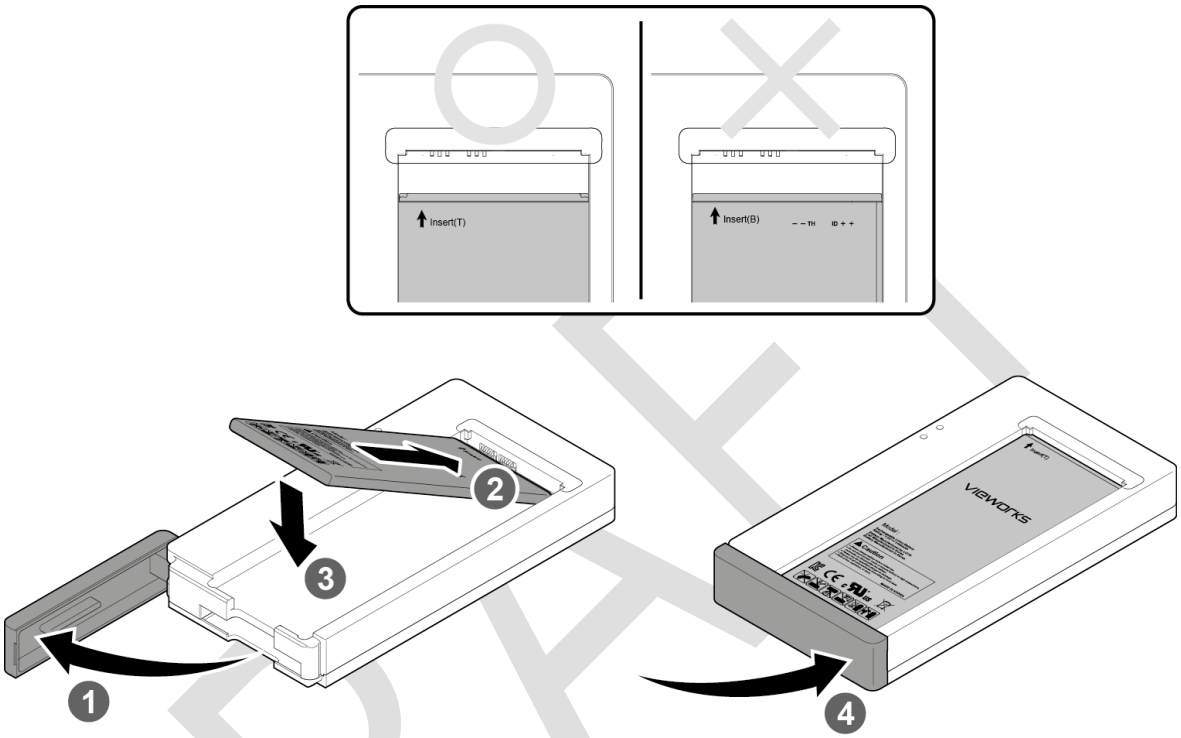

1 Open the cover at the lower side of charger.
2 Put the battery on the top of charger in the right direction.
3 Push the battery down until it is fixed in the charging part.
4 Close the cover at the lower side of charger.

	Stimultaneous charging	Charging time
Battery charger	2 battery packs	3 hrs
Tether interface cable	1 battery pack	4 hrs

DRAFT

Charging type 2

Supply power to the charger with the power adapter before charging a battery.

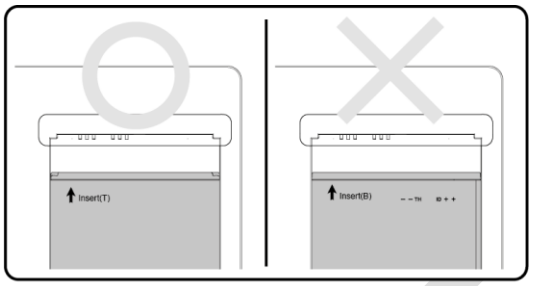

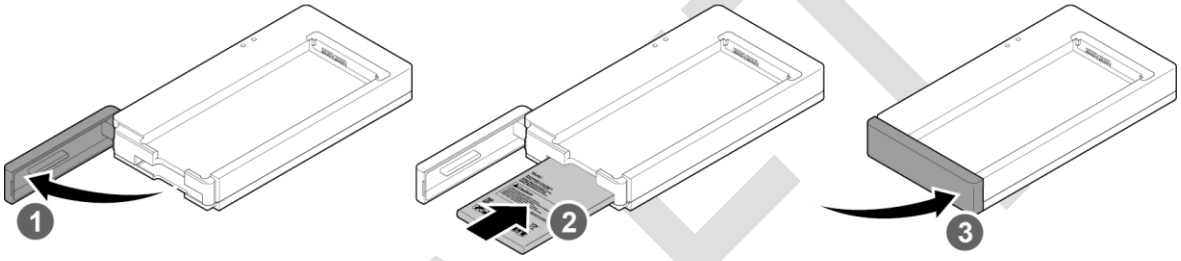

1 Open the cover at the lower side of charger.
2 Insert the battery into the slot until it clicks.
3 Close the cover at the lower side of charger.

- The charging time can be different depending on temperature and charging status of a battery.
- While charging a battery pack, it is available to use the detector by connecting it with a tether interface cable.

- This detector is designed to make a battery being discharged little by little during the detector is off. Therefore, remove the battery pack when the detector is not used for some time. Otherwise, over discharge may occur resulting in the shortened battery life.
- Do not use the charger around the paitent.
- Charge the battery with the charger provided by Vieworks.
- Securely plug the power cord of the charger into the AC outlet. If contact failure occurs, or if dust/metal objects come into contact with the exposed metal prongs of the plug, fire or electric shock may result.
- Stop charging the battery when status LED of the charger turns to green as exceeding the specified charging time. Otherwise, the battery pack is overcharged and it causes smoke. If the battery pack is overheating, it can be exploded and a fire may occur.
- Use only a power adapter complying with IEC 60601-1 or IEC 60950-1.

DRAFT

4.2 Product Installation

4.2.1 Connecting Devices

- Installation of this equipment should be made by licensed and authorized personnel by Vieworks.
- This equipment must only be connected to the power with protective earth.

SCU Basic (FXRS-02A)

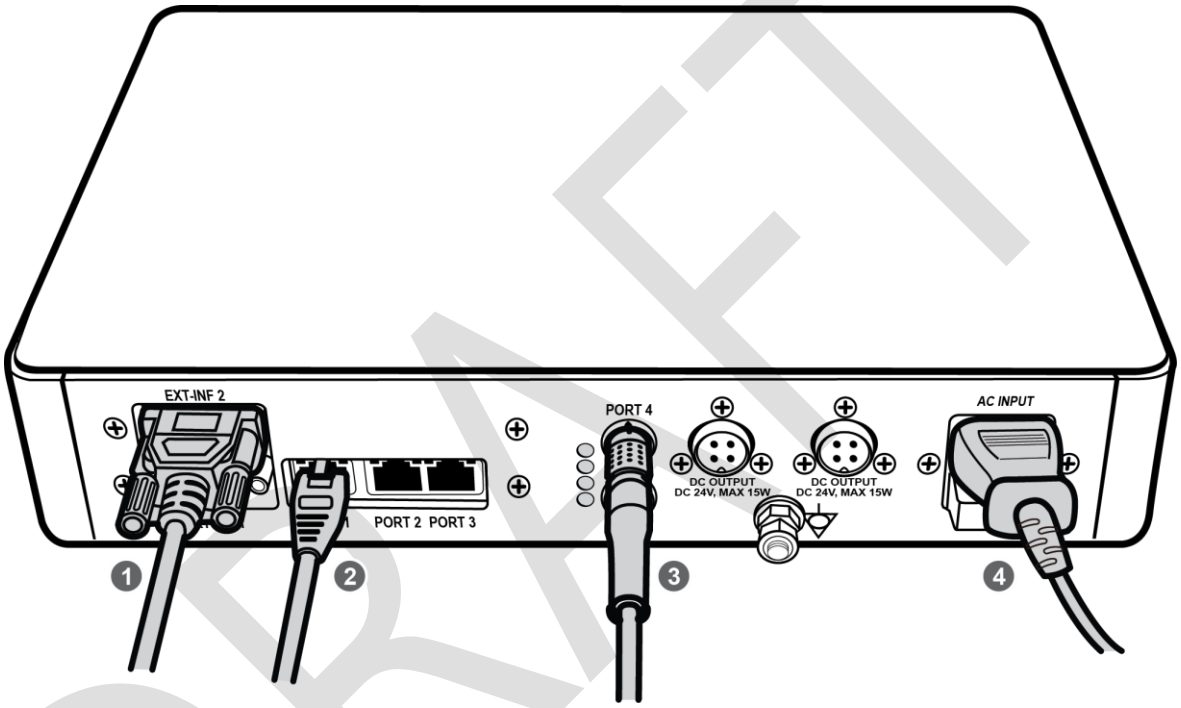

1 If you use the **DR Trigger** mode, connect the one end of generator interface cable to the **EXT_INF** port of SCU, and the other to the X-ray generator.

- If you use the AED mode, a generator interface cable is not needed as the detector operates by detecting X-ray automatically.

2 Connect one end of the LAN cable to one of the LAN ports of SCU, and the other to the LAN Card Connector of workstation assigned for data transfer.

3 Connect the one end of the Tether Interface cable to the **Port 4** or **Port 5** of SCU and the other to the detector.

4 To supply power, connect the AC power cable to the AC power input port of SCU.

DRAFT

SCU Basic (FXRS-03A)

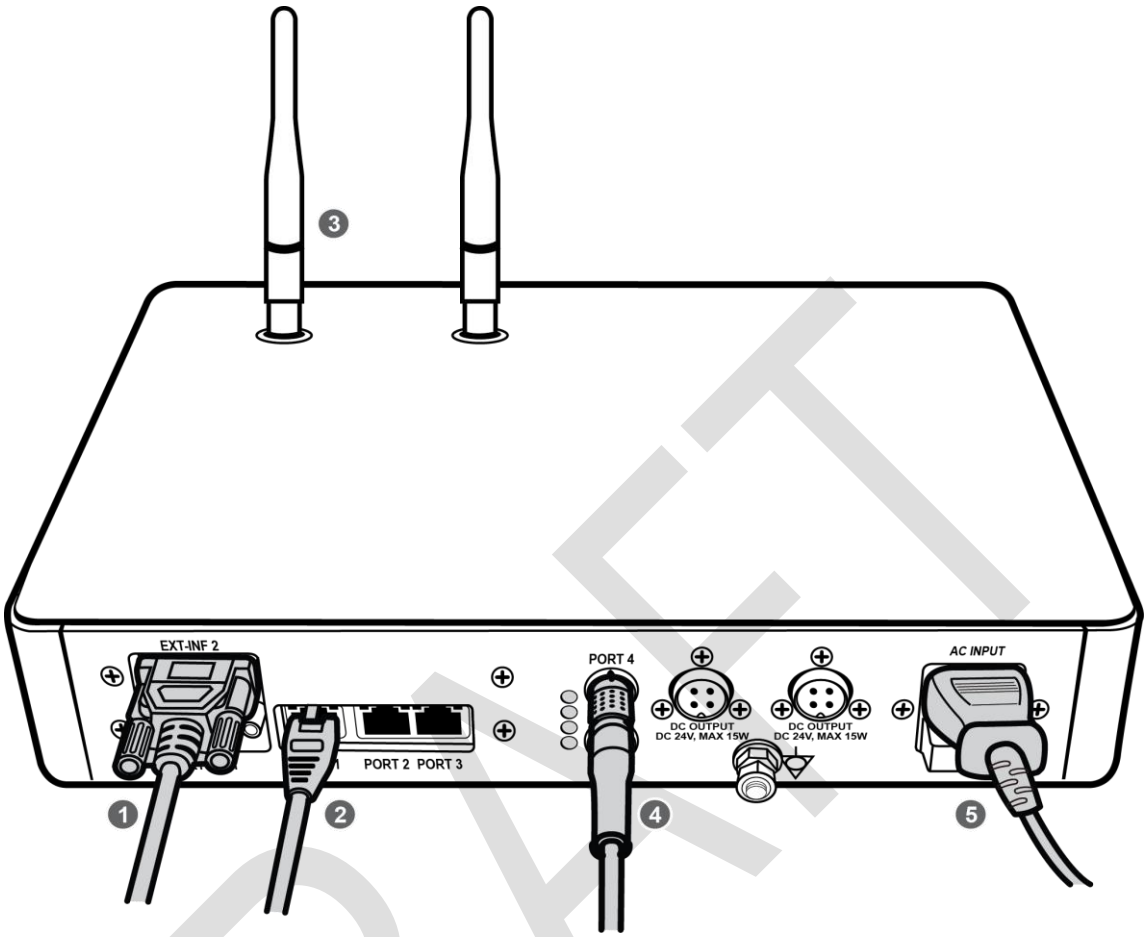

1 If you use the **DR Trigger** mode, connect the one end of generator interface cable to the **EXT_INF** port of SCU, and the other to the X-ray generator.

- If you use the AED mode, a generator interface cable is not needed as the detector operates by detecting X-ray automatically.

2 Connect one end of the LAN cable to one of the LAN ports of SCU, and the other to the LAN Card Connector of workstation assigned for data transfer.

3 Stand the antenna of SCU upright.

4 To transmit image data using a Tether Interface, connect the one end of the Tether Interface cable to the **Port 4** or **Port 5** of SCU and the other to the detector.

- If you use the wireless communication method, a tether interface cable is not needed as the image is transmitted wirelessly.

5 To supply power, connect the AC power cable to the AC power input port of SCU.

DRAFT

VIVIX SCU mini (FXRS-04A)

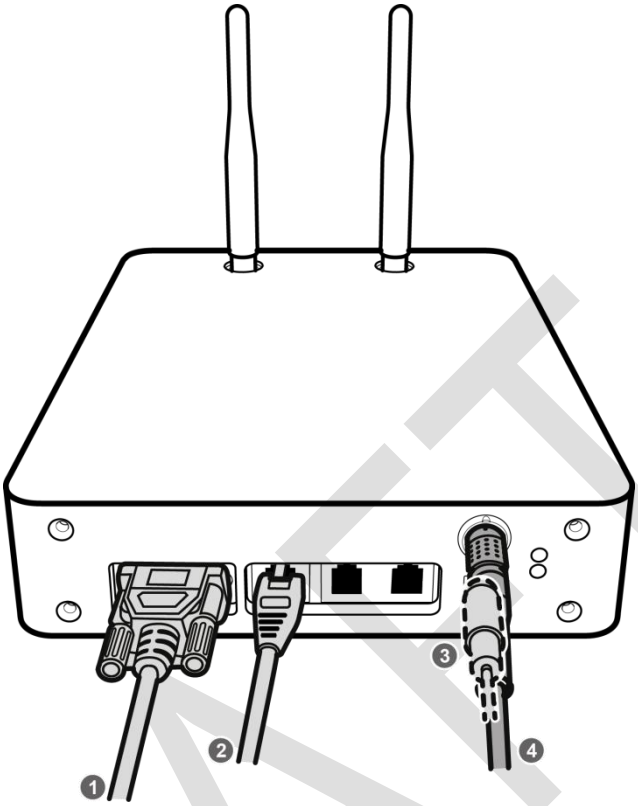

1 If you use the **DR Trigger** mode, connect the one end of generator interface cable to the **EXT_INF** port of SCU mini, and the other to the X-ray generator.

- If you use the AED mode, a generator interface cable is not needed as the detector operates by detecting X-ray automatically.

1 Connect one end of the LAN cable to one of the LAN ports of SCU mini, and the other to the LAN Card Connector of workstation assigned for data transfer. Stand the antenna of SCU mini upright.

2 To transmit image data using a tether interface, connect the one end of the tether interface cable to the port of VIVIX SCU mini and the other to the detector.

- If you use the wireless communication method, a tether interface cable is not needed as the image is transmitted wirelessly.

3 To supply power, connect the DC power cable to the DC power input port of SCU mini.

DRAFT

4.2.2 Booting up SCU

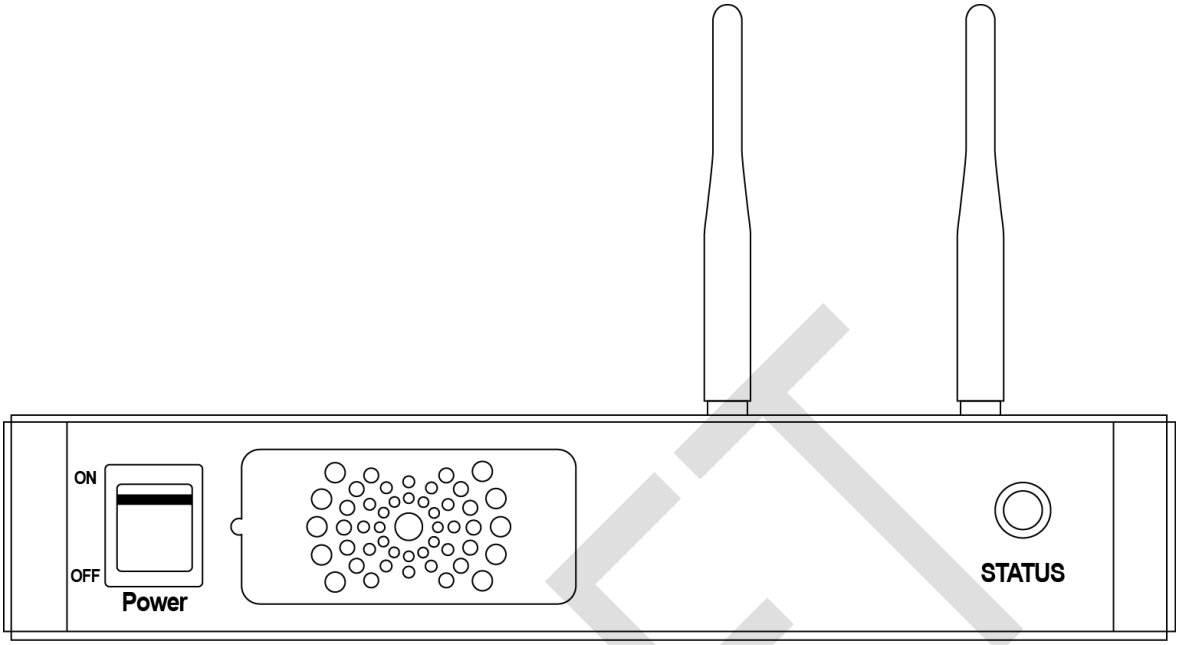

1 Turn on the power switch at the front side of SCU.
2 Check if the power switch of SCU lights up green.
3 Check if the status indicator is blinking in green after the power switch of SCU is permitted.
4 Check if the status indicator of SCU is blinking in green and turns to light up in the same color.

- When the power switch lights up green, it means that the power is applied normally.
- When the status indicator is blinking in green, the SCU is booting.
- If the status indicator lights up green, it indicates that the SCU is being operated normally after booting up.

4.2.3 Booting up the Detector

- The procedures in this chapter are explained according to the default setting status of a detector (factory reset) and the use of wireless connection.
- Refer to <7.5 Product Initialization> for the detailed information about the default setting status of a detector.

1 Attach a charged battery pack to the detector.
2 Press the power button of the detector for 1 second until the power LED is turned on.
3 When the power LED is on, check if it is lit green.
4 Check if the active LED is lit orange on the detector.

- If the power LED lights up green, the DC power is permitted normally.
- If the active LED lights up orange, the detector is compeleted to boot up normally.

DRAFT