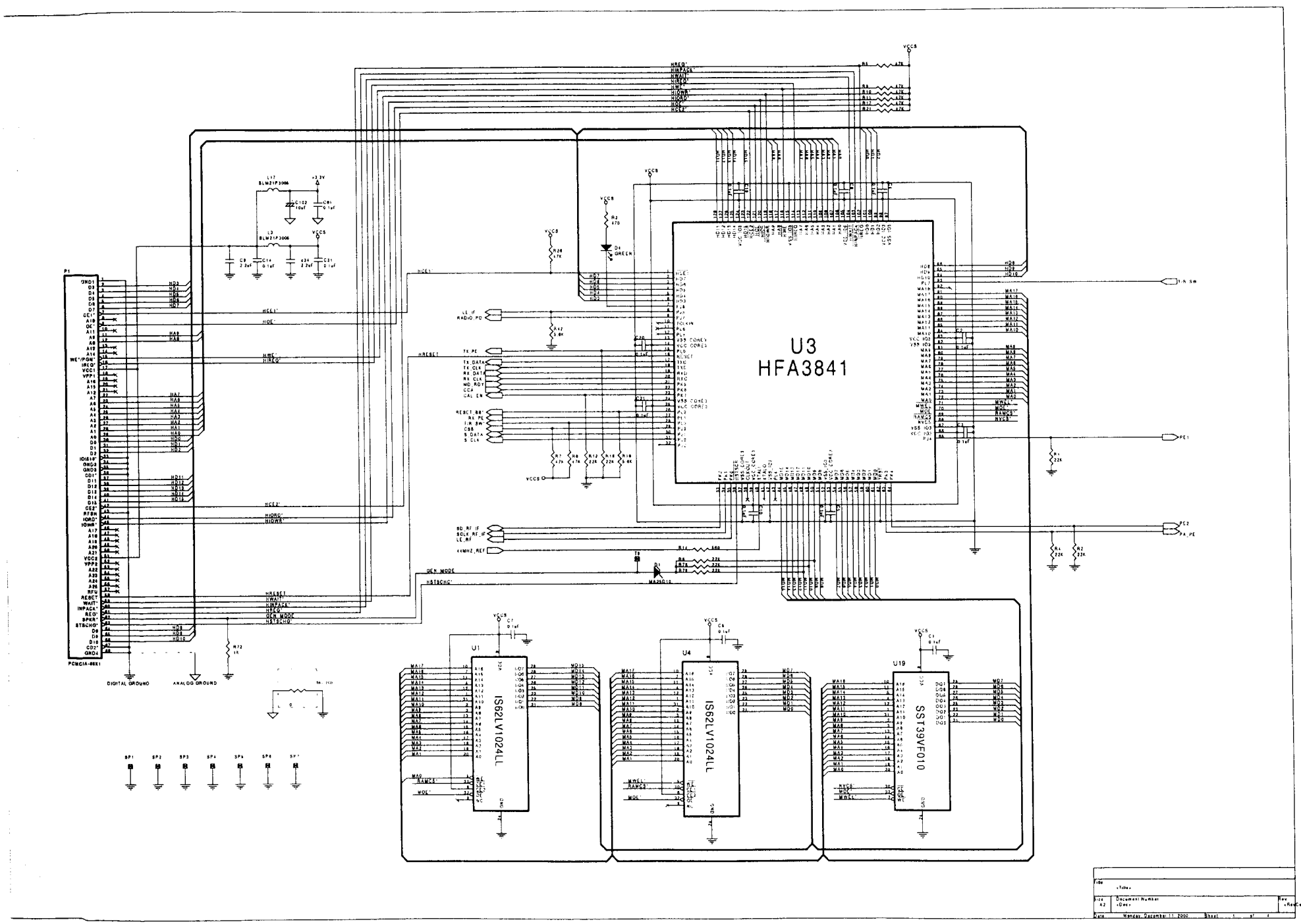
U3
HFA3841
U1
IS62LV1024LL
U4
IS62LV1024LL
U19
SST39VF010
P1
PCMCIA-68S1
DIGITAL GROUND
ANALOG GROUND
VCC5
+3.3V
L17
BLM21P3006
L3
BLM21P3006
C102
10uF
C81
0.1uF
C9
2.2uF
C14
0.1uF
C24
2.2uF
C31
0.1uF
R2
470
D4
GREEN
R26
17K
R42
8K
R72
1K
R1
47K
R3
47K
R10
47K
R11
47K
R12
47K
R21
47K
R7
27K
R8
47K
R12
22K
R18
22K
R19
6.8K
R14
560
R4
22K
R5
22K
R1
22K
R2
22K
D1
MA2SQ12
T3
C1
0.1uF
C6
0.1uF
C1
0.1uF
C2
0.1uF
C3
0.1uF
C4
0.1uF
C5
0.1uF
C7
0.1uF
C8
0.1uF
C21
0.1uF
C28
0.1uF
C29
0.1uF
C30
0.1uF
C31
0.1uF
C32
0.1uF
C33
0.1uF
C34
0.1uF
C35
0.1uF
C36
0.1uF
C37
0.1uF
C38
0.1uF
C39
0.1uF
C40
0.1uF
C41
0.1uF
C42
0.1uF
C43
0.1uF
C44
0.1uF
C45
0.1uF
C46
0.1uF
C47
0.1uF

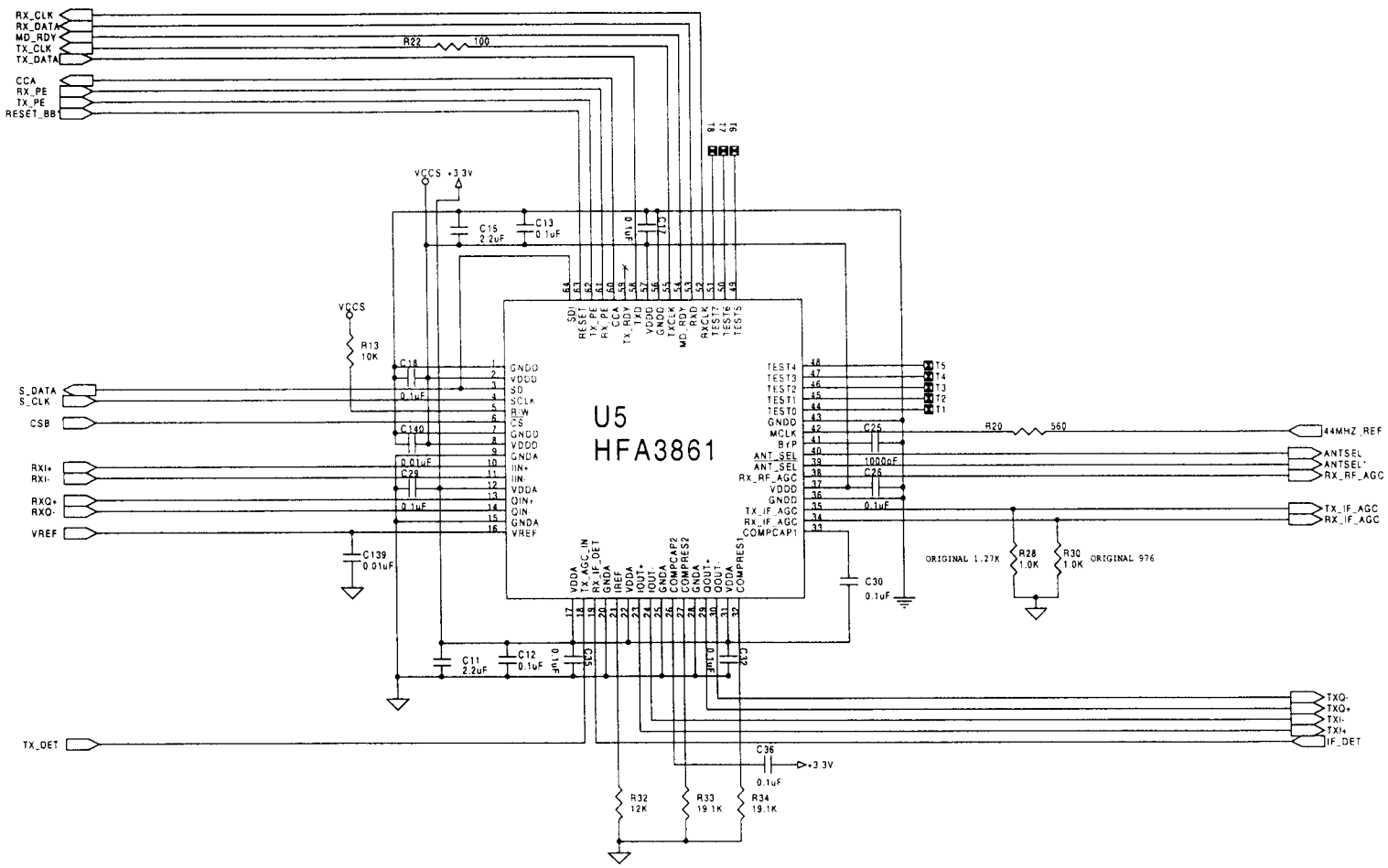

Title	BASE BAND	
Size A3	Document Number <Doc>	Rev <RevCode>
Date: Monday, December 11, 2000	Sheet 2 of 4	

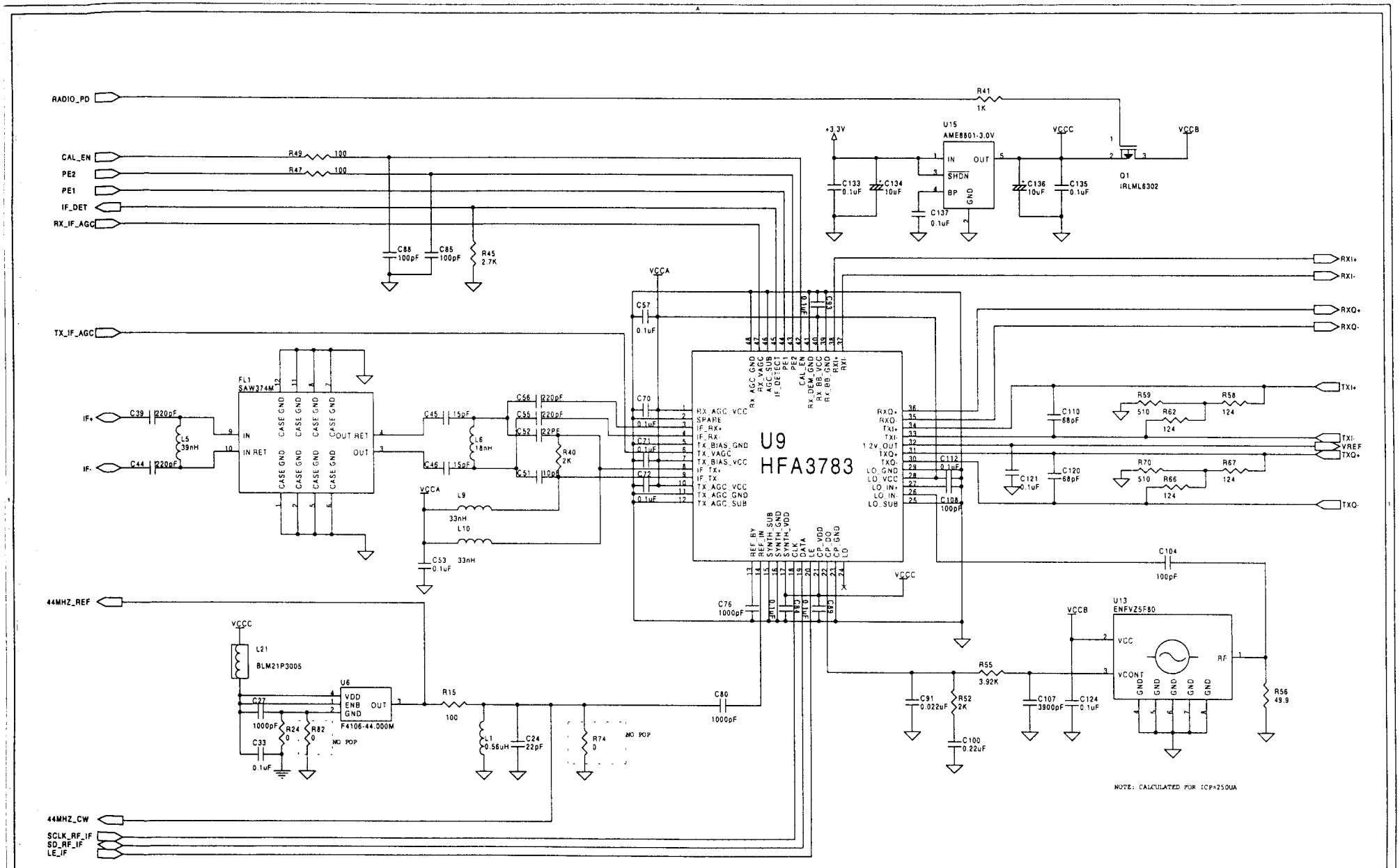
RADIO_PD
CAL_EN
PE2
PE1
IF_DET
RX_IF_AGC
TX_IF_AGC
44MHZ_REF
44MHZ_CW
SCLK_RF_IF
SD_RF_IF
LE_IF
IF+
IF-
U9
HFA3783
U15
AME8801-3.0V
Q1
IRLML6302
FL1
SAW374M
U6
F4106-44.000M
U13
ENFVZ5F80
RXI+
RXI-
RXQ+
RXQ-
TXI+
TXI-
VREF
TXQ+
TXQ-
NO POP
NOTE: CALCULATED FOR ICP=250UA
Title
IF
Size
A3
Document Number
<Doc>
Rev
<RevCode>
Date
Monday, December 11, 2000
Sheet
3
of
4

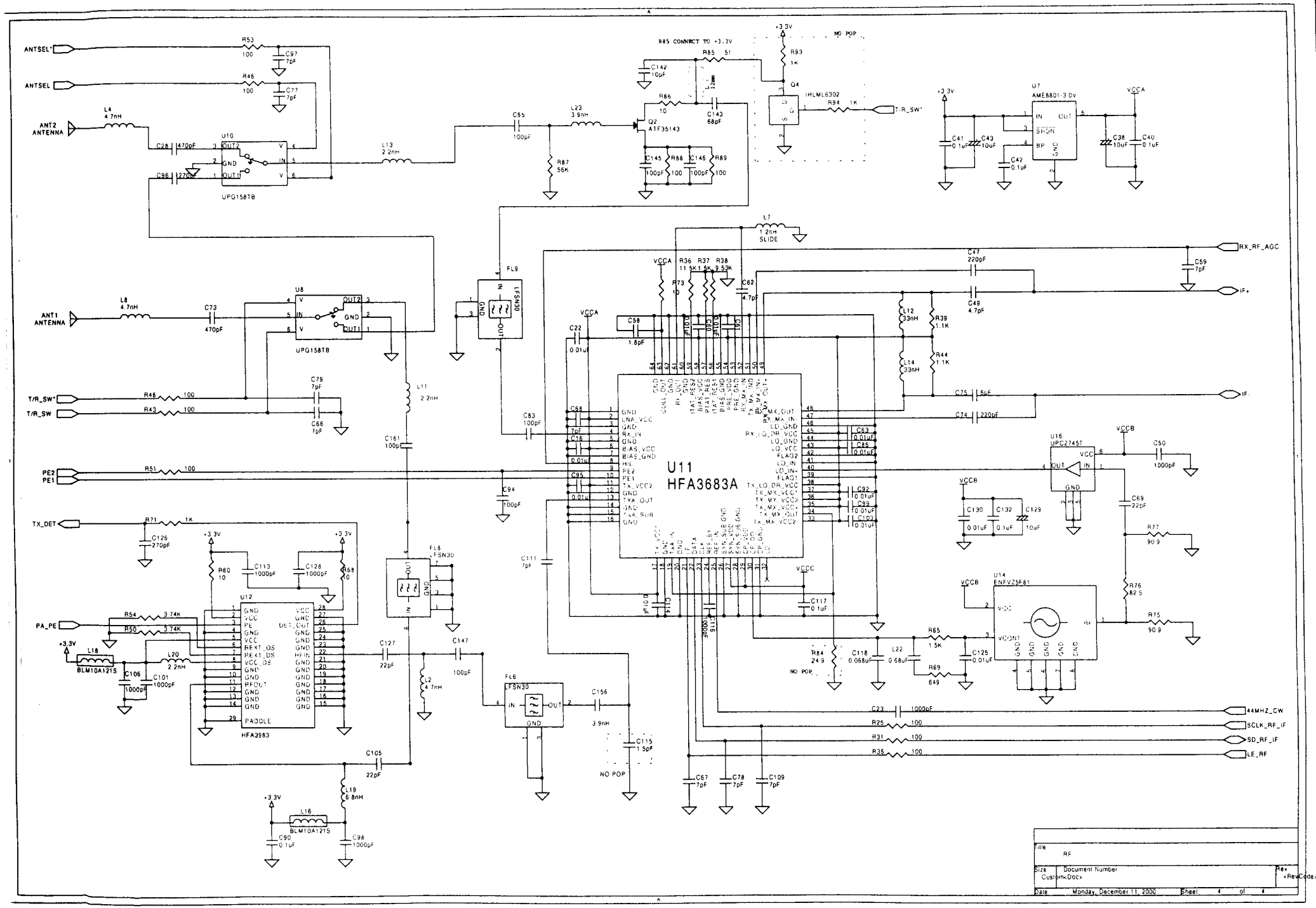
ANTSEL*
ANTSEL
ANT2 ANTENNA
ANT1 ANTENNA
T/R_SW*
T/R_SW
PE2
PE1
TX_DET
PA_PE
U11
HFA3683A
U12
HFA3983
U10
UPG158TB
U8
UPG158TB
U7
AME8801-3.0V
U16
UPC2745T
U14
ENFVZ5F61
Q2
A1F35143
Q4
IRLML6302
FL9
LFSN30
FL8
LFSN30
FL6
LFSN30
R85 CONNECT TO +3.3V
NO POP
RX_RF_AGC
IF+
IF-
44MHZ_CW
SCLK_RF_IF
SD_RF_IF
LE_RF
Title
RF
Size
Document Number
Rev
Date
Monday, December 11, 2000
Sheet 4 of 4