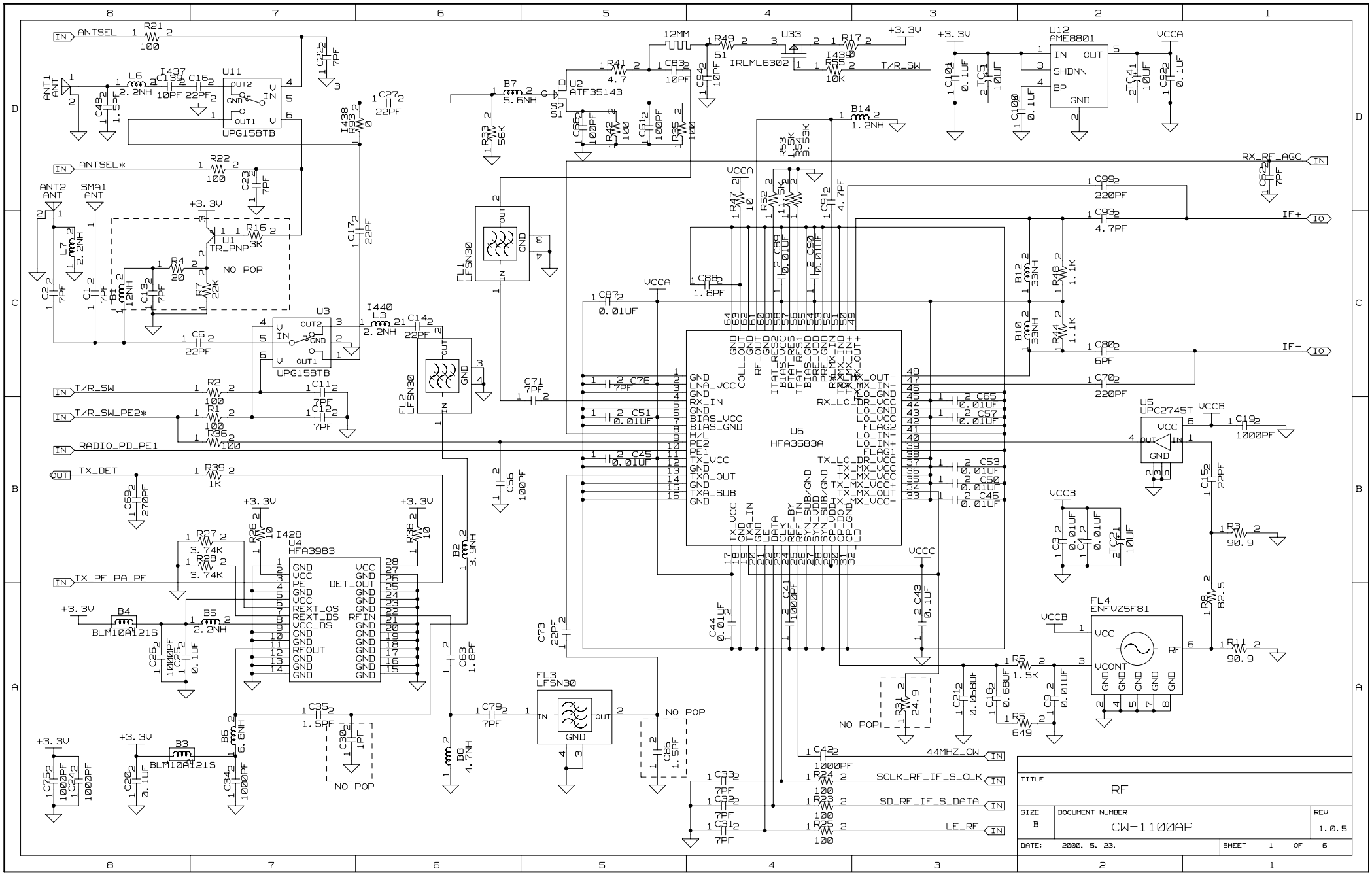
ANTSEL
ANTSEL*
T/R_SW
T/R_SW_PE2*
RADIO_PD_PE1
TX_DET
TX_PE_PA_PE
RX_RF_AGC
IF+
IF-
44MHZ_CW
SCLK_RF_IF_S_CLK
SD_RF_IF_S_DATA
LE_RF
U11
UPG158TB
U1
TR_PNP
NO POP
U3
UPG158TB
U2
ATF35143
U33
IRLML6302
U12
AME8801
U6
HFA3683A
U4
HFA3983
U5
UPC2745T
FL4
ENFVZ5F81
FL1
LFSN30
FL2
LFSN30
FL3
LFSN30
TITLE
RF
SIZE
B
DOCUMENT NUMBER
CW-1100AP
REV
1.0.5
DATE: 2000. 5. 23.
SHEET 1 OF 6

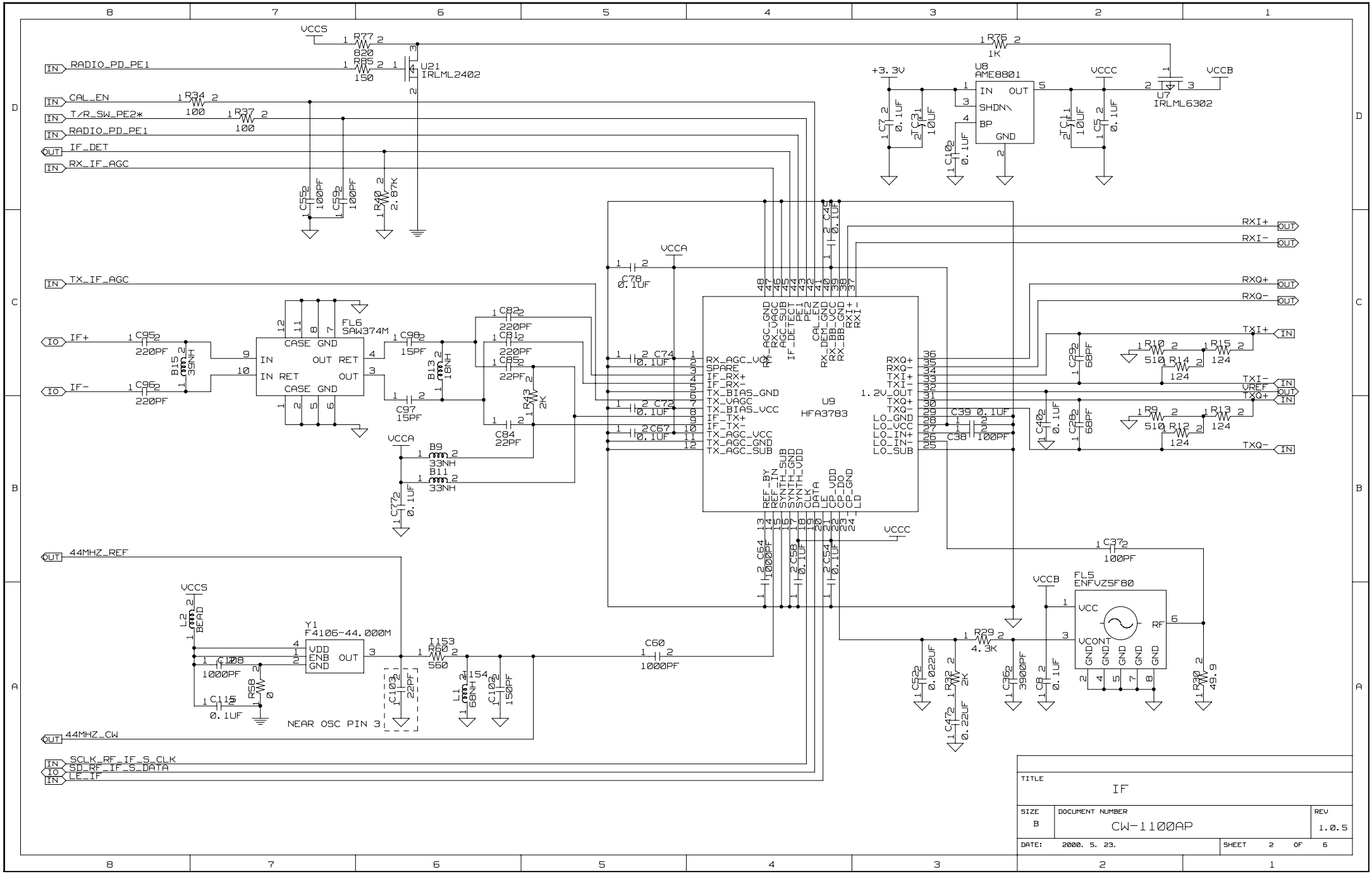

TITLE	IF	
SIZE B	DOCUMENT NUMBER CW-1100AP	REV 1.0.5
DATE: 2000. 5. 23.	SHEET 2 OF 6	

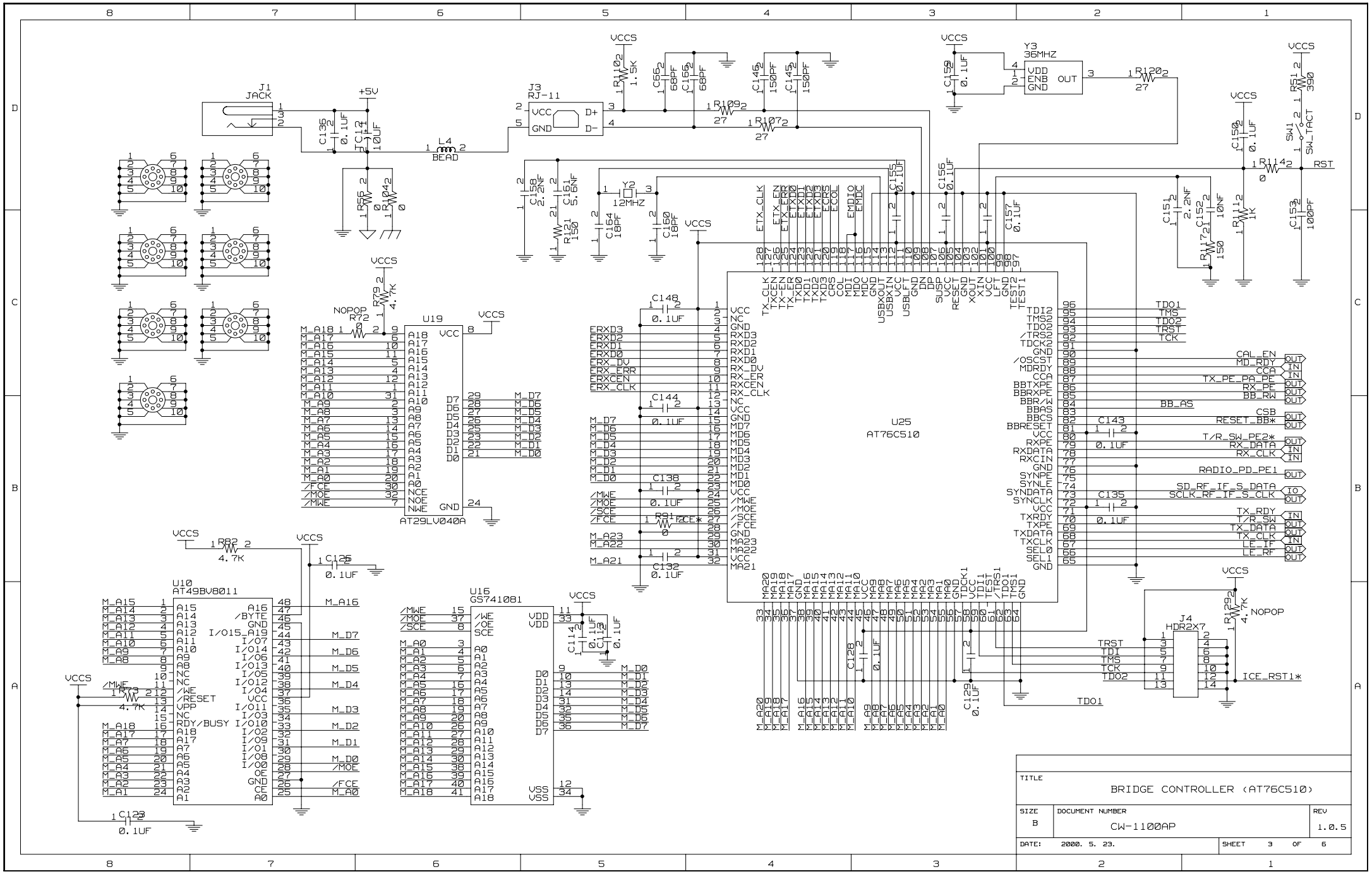

TITLE	BRIDGE CONTROLLER (AT76C510)
SIZE B	DOCUMENT NUMBER CW-1100AP
REV	1.0.5
DATE: 2000. 5. 23.	SHEET 3 OF 6

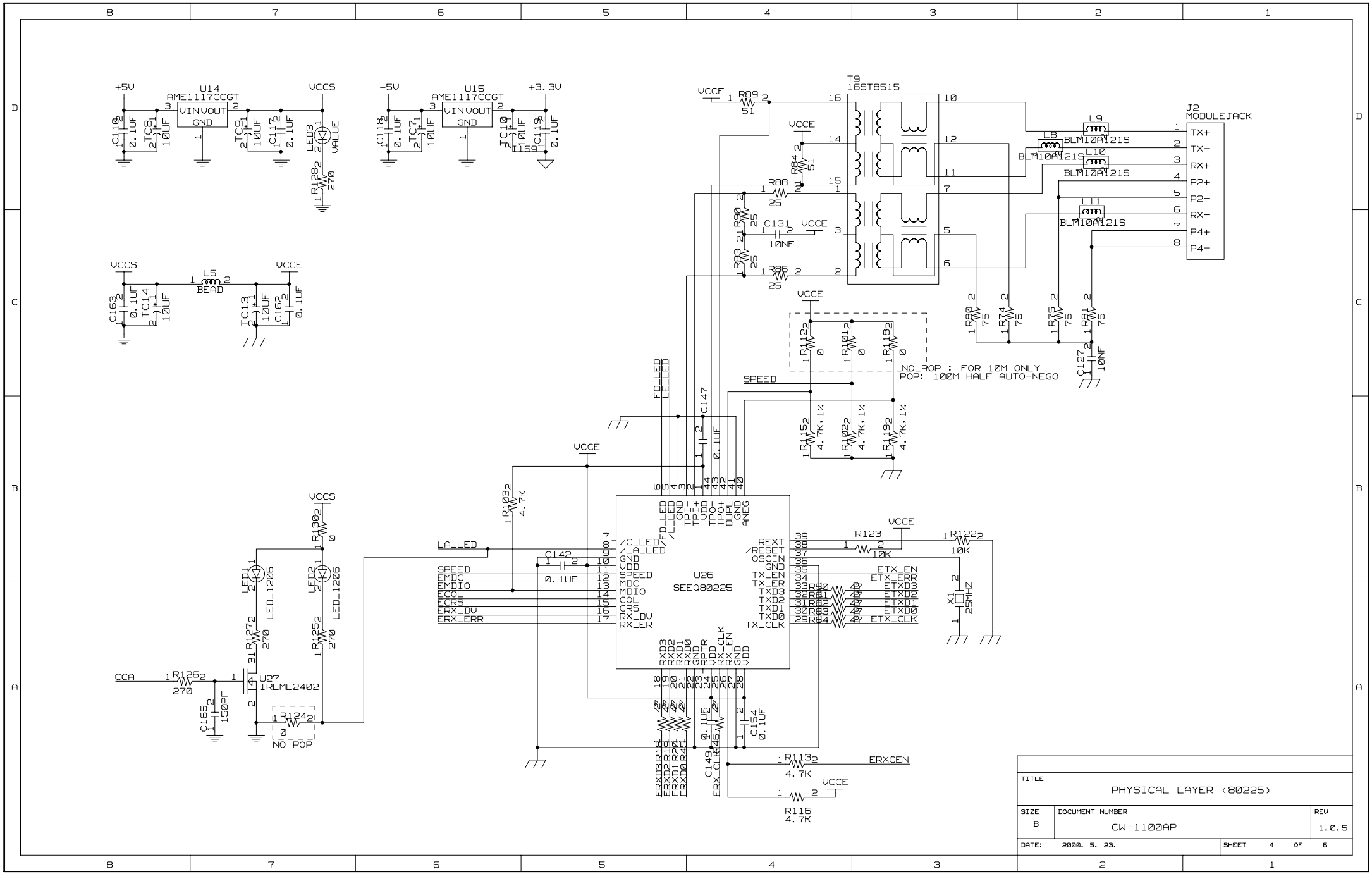

TITLE
PHYSICAL LAYER (80225)

SIZE	DOCUMENT NUMBER	REV
B	CW-1100AP	1.0.5

DATE: 2000. 5. 23. SHEET 4 OF 6

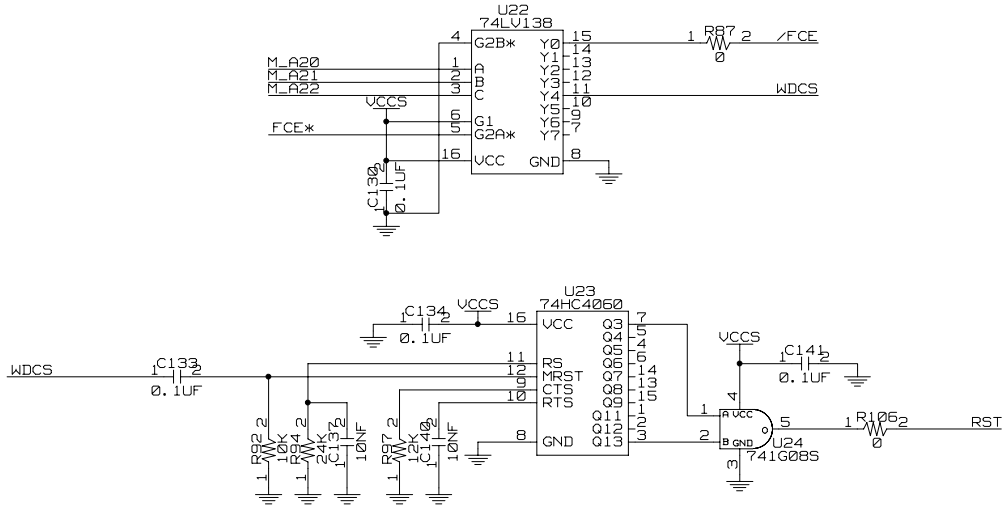

TITLE	1M SRAM & 4M FLASH MEMORY	
SIZE B	DOCUMENT NUMBER CW-1100AP	REV 1.0.5
DATE: 2000. 5. 23.	SHEET 5 OF 6	

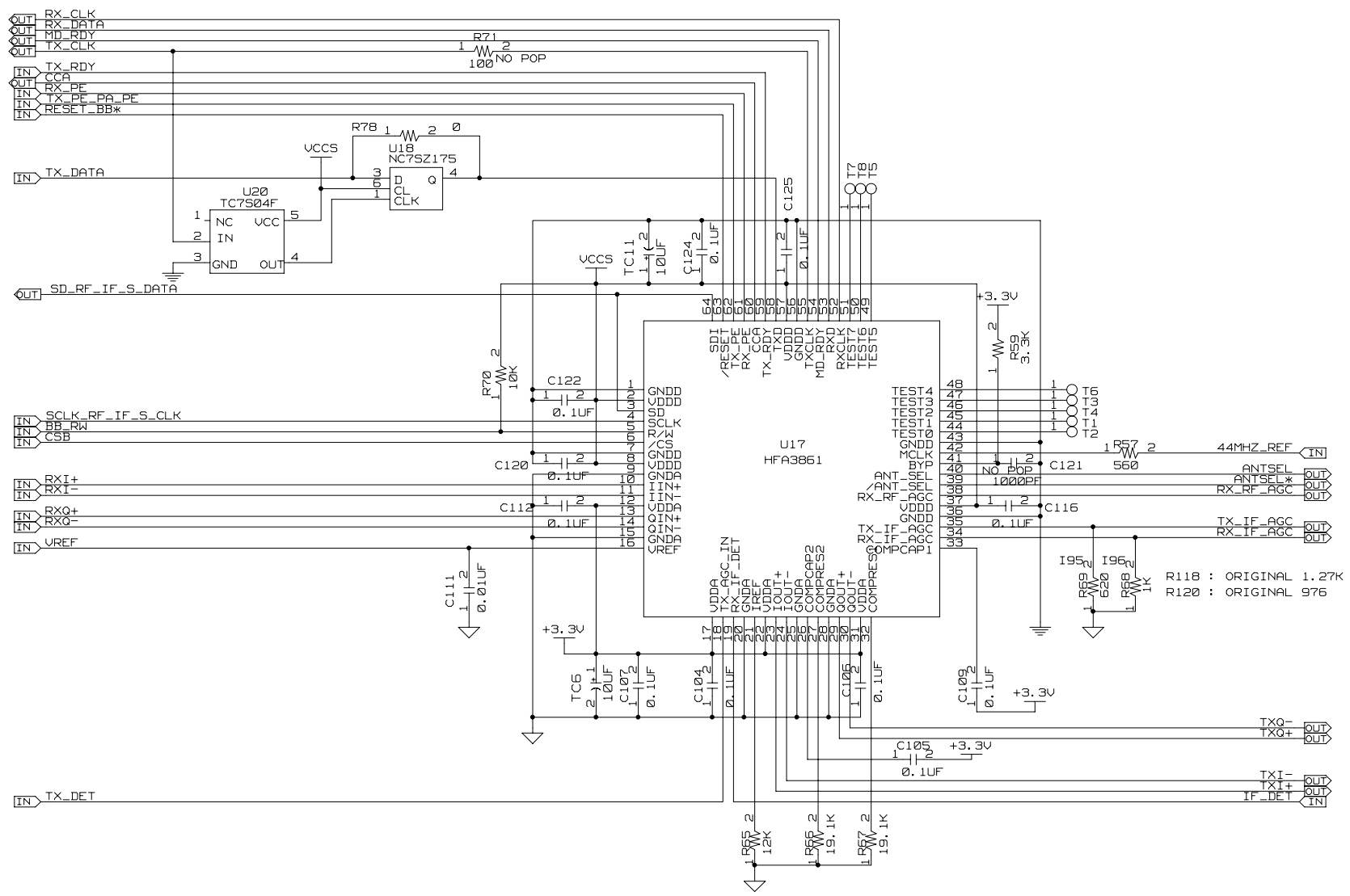

TITLE	BASE BAND	
SIZE B	DOCUMENT NUMBER CW-1100AP	REV 1.0.5
DATE: 2000. 5. 23.	SHEET 6 OF 6	