USER'S MANUAL

CDMA2000
FIXED WIRELESS TERMINAL

AXW-T800 / 800R
AXW-T1900 / 1900R

axess•tel

INTRODUCTION

Axesstel's CDMA2000 1x fixed wireless terminals allow users to "get connected" to voice and data services with unprecedented ease. Powered by QUALCOMM's MSM5105 processor, these terminals provide data service through USB and RS-232 interfaces at rates of up to 153 Kbps. With RJ-11 phone connections, the users can enjoy rich features ranging from basic voice service to caller ID, call waiting, 3 way calling, and analog fax. User-friendly design and 4 LED indicators make these terminals easy to set up and use.

Features

Convenience Features
CDMA-2000 1x (backward compatible to IS-95 A/B) Data service capability (153.6 Kbps max)
4 multi-colored LED indicators (Power, Signal Strength, Call Connection,and Voice Mail)
Multi-extension (2 RJ-11 ports)
RS-232C and USB Data via Special Connector
Dial-Tone and DTMF Generation
Desktop or Wall-Mountable
Call Waiting, Forwarding, Transfer
Three-way Calling
Caller ID (displayed on Call ID campatible analog phone)
Voice Mail
Optional Range-extending Patch Antenna
Optional Analog Fax (IS-707-A.7, A.4 backward compatible)

TABLES OF CONTENTS

Safety Precautions ---------- 3
Checking Parts ---------- 4
Terminal Information ---------- 5
Getting to know the terminal----- 8

Basic Operation
Power On/Off ----------12
Making Calls ----------12
Receiving Calls ----------13

Advanced Features
Adjusting voice volume----------14
Setting alarm----------14
Setting 1 minute----------14
Setting connection alert---------- 15
Setting voice privacy alert--------- 15
Setting caller ID mode---------- 16
Setting autosend time----------16
Setting DTMF length----------16
Change the Lock Code ---------- 17
Restricting Outgoing Calls -------- 17
Restricting international calls-----18
Restricting long distance calls----18
Terminal reset----------19
Data service----------19

FAX Service (Option)
Fax Set-Up ----------22
Sending Fax Messages ---------- 22
Receiving Fax Messages ---------23

Optional Features
Call Waiting ----------26
Three-Way Calling ----------26
Call Forwarding ----------26
Caller ID ----------26
Voice Mail Service ----------26

Miscellaneous
Menu Options Table ----------28
Troubleshooting ---------- 28
Specifications ----------29

SAFETY PRECAUTIONS

1. Avoid placing the phone in a dusty location, or near a source of gas or fire.
2. Don not shake, hit or drop the phone.
3. To clean the outside of the phone, use only a soft, dry cloth. The chemicals in alcohol, benzine or acetone can damage the surface of the phone.
4. Do not twist or pull the cables.
5. Do not disassemble the terminal.
6. DO NOT use the power adapter if:
   - The power cord is damaged.
   - The adaptor has been damaged in any way.
7. Use only the AXESSTEL provided adapter. Do not use the AXESSTEL adapter for any other purpose.
8. Use only the AXESSTEL provided antenna. Do not use the antenna for any other purpose.
9. Frequency and length of use can affect the life of the self-charging battery. Contact your customer service if the battery is not operating properly.
10. Use only the designated self-charging battery. Dispose of exhausted batteries properly. Never discard a battery in or near fire or flame.
11. Do not use the terminal near water, for example, near a bathtub, sink, wet basement, or swimming pool.

NOTE: The input voltage and the shape of the plug may vary from country to country.

CHECKING THE PARTS

After opening the package, check to make sure that you have all the parts shown below. If any piece is missing or broken, please call your agent or customer service. Items marked optional may be available only on select models.

1 Fixed Wireless Terminal Main Unit

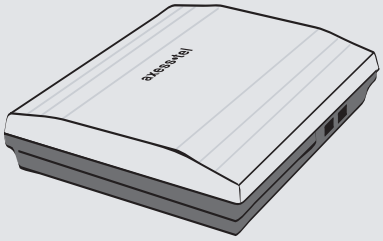

4 User's Manual

2 Antenna

5 Backup Battery (Optional)

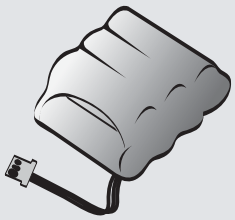

3 AC/DC Adapter and AC Cord

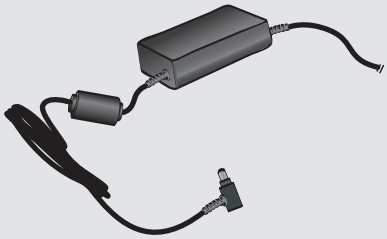

6 RJ-11 Phone Cord

TERMINAL INFORMATION

How to install internal battery (optional)

1. Open battery cover on the bottom side of the terminal.
2. Connect the DC power cable to terminal.
3. Insert the battery pack in the right position between the hold bars.
4. Close the battery cover.

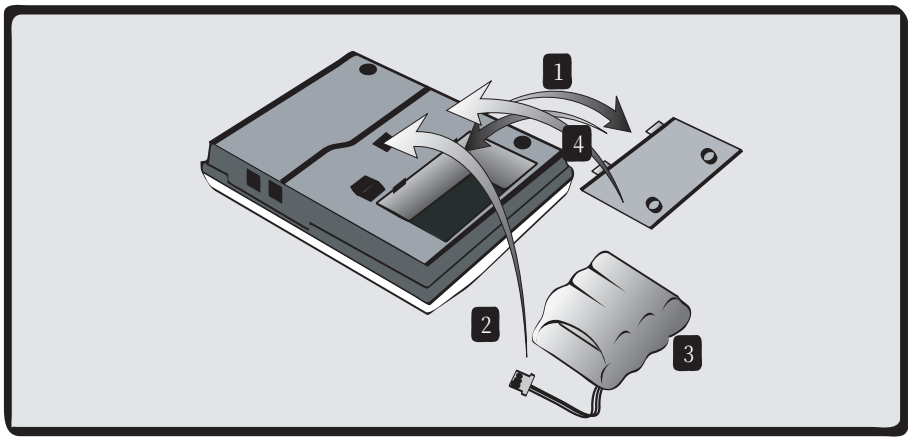

Installing the RUIM Card (Optional for AXW-T450R/T800R/T1900R models only)

1. Put the RUIM card into the Socket as shown in the picture.

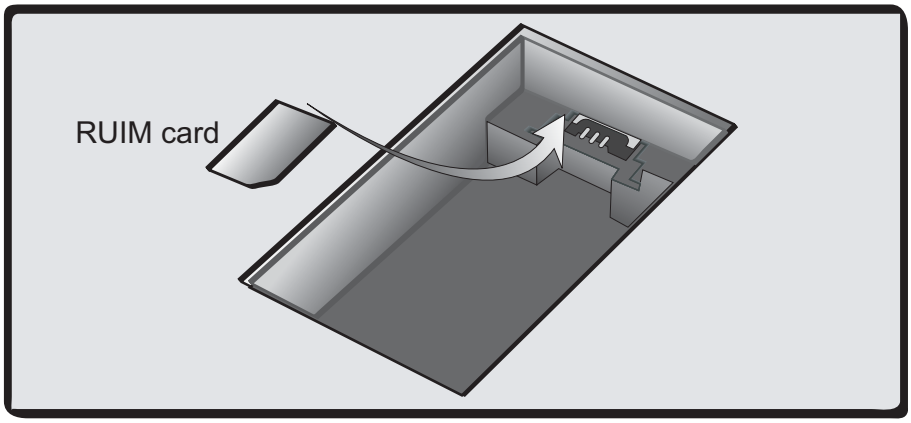

Desktop Installation

This FWT ACW-T800/T1900 operates by receiving electricity from an electrical outlet or internal battery.

1. Connect the antenna on the back TNC connector of the terminal.
2. Connect a wire telephone to the terminal using an RJ-11 cord.

NOTE: Use the telephone compatible to FCC part 68 only. Non-compliant phones may not work properly.

3. Plug the AC Adaptor jack into the DC 15V jack of the Terminal.
4. Plug the AC adaptor plug into an appropriate electrical outlet.
5. Connect an analog facsimile machine to one of the RJ-11 ports.

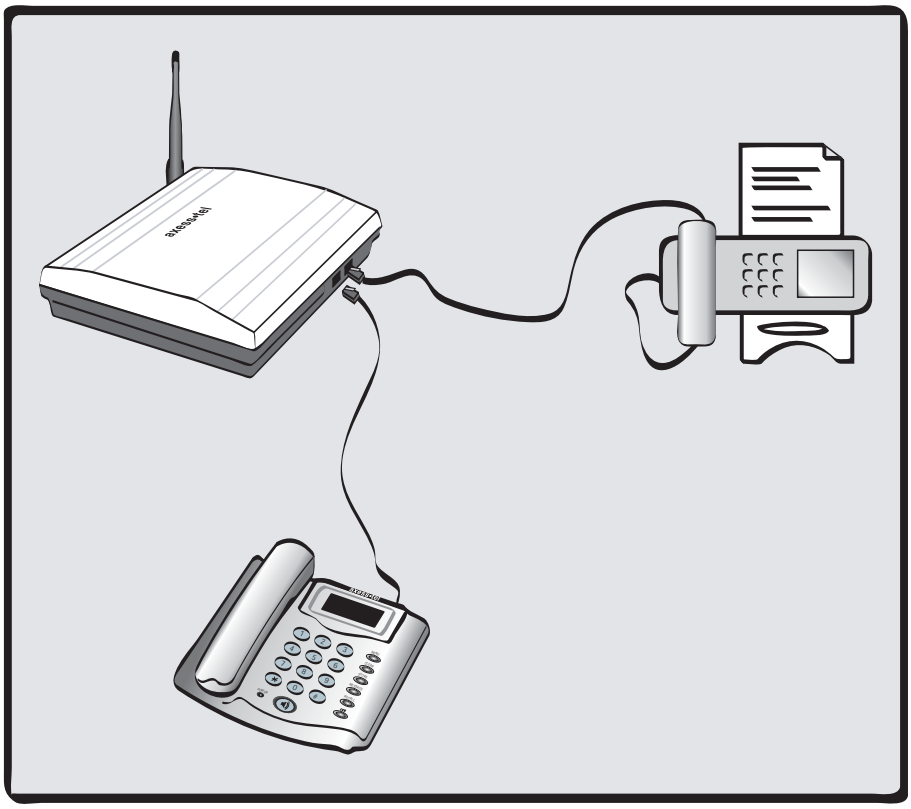

Wall Mount Installation

1. Mark two mounting hole locations to match the screw hole in the back of the terminal.
2. Drill two holes at the marked locations.
3. Tighten the screws until the head is about 5mm from the wall.
5. Plug in the power connector and route the cord in the groove, if needed.
6. Screw the antenna into antenna connector.
7. Hang the terminal on the screw using the two holes in the back.
8. Push the terminal down until the unit is firmly locked into place.

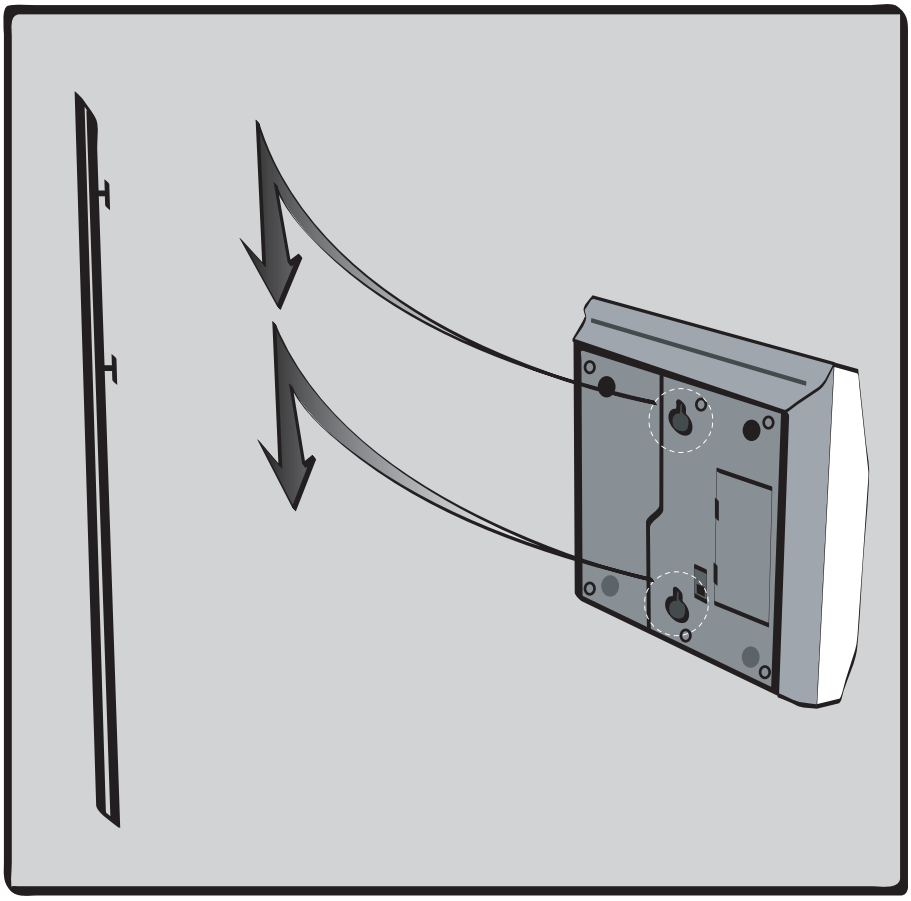

GETTING TO KNOW THE TERMINAL

LED indications

LED	Color	Meaning
Power	Red	Power is being supplied by AC adapter
	Off	No power / Power is being supplied by battery.
Signal	Green	Excellant Service Condition
	Orange	Good Service Condition
	Red	Voice through the line is not clear but a call is available.
	Off	No Service Condition
	Blinking	Incoming call
Battery	Green	If there is external power, chrged complete.
		Is not, full chrging.
	Orange	If there is external power, chrged .
		Is not, medium chrging.
	Red	Low charged
	Off	No battery is installed.
Voice Mail	Green	You have voice mail message. (If applicable)
	Off	Normal operation without any voice mail message.

Sound indications

Type	Condition	Meaning
Normal dial Tone	continuous	Terminal is in service area with adequate signal.
No Service Tone	1.5sec on 800 msec off	Terminal cannot make or receive calls. (No signal)
Outgoing call restriction tone	800 msec on 200 msec off	Terminal is configured to block outgoing call but it can receiving incoming calls.
Voice mail tone	beep-beep-beep	You have voice mail message.
Confirmation	bee-bee-beep	When using the menu with ** sequence, this sound alerts successful entry.
Error	howling beep	When using the menu with ** sequence, this sound alerts error entry.

Basic Operation

Power On / Off

Making Calls

Receiving Calls

POWER ON / OFF

There is power switch on the bottom side of the terminal.

1. Turn on the terminal by moving switch to ON position.
2. Press the power switch more than 2 seconds to turn off the FWT.

NOTE: When you turn on the terminal, it automatically searches for service signal. When it successfully acquires service signal, it generates dial tone on the handset.

Starting with RUIM (AXW-T450R/800R/1900R models only)

When the Pin Code of R-UIM Card is turned on, you may need to enter the Pin Code when ou power on the terminal.

1. Lift the receiver of the analog telephone.
2. Using the numeric keypad of the analog phone, enter Pin Code.

Note 1: Pin code checking can be turned on/off. Please see page ___.

Note 2: You may enter pin code up to 3 times. After 3 times, you will need to re-start the terminal.

Note 3: Default pin code is provided by the service provider. Please contact your service provide in case you do not remember the pin code.

MAKING CALLS

1. Check to see that your terminal is turned on.
2. Pick up the handset of the phone.
3. If you hear the dial tone, dial the desired telephone number, using the numeric keypad.
4. Wait for about 4 seconds until the call is automatically made by the terminal.

Note: Press ⊛ or # button to make all right away after entering the dial number.

5. When the other person answers, begin conversation.

Note: If Connection Alert is turned on, a beep is heard when the other person answers your call.

6. To hang up, put the handset back on the phone.

Note 1: Dial number of maximum 32 digits, including ⊛ and # , can be entered.

Note 2: To make a call to the pre-programmed emergency number, press and hold ⊛ for about 2 seconds. An emergency call will be made automatically.

RECEIVING CALLS

The terminal signals the telephone(s) to ring when an incoming call is detected.

1. Pick up the telephone handset to answer the call.
2. To disconnect after finished, replace the handset on the phone..

Note 1: Make sure that the attached telephone ringer is enabled.

Note 2: When an incoming call comes in, when you are holding the receiver, press any key on the numeric keypad of the phone to answer the call.

Advanced Feature

Adjusting voice volume
Setting alarm
Setting 1 minute alert
Setting connection alert
Setting caller ID mode
Setting autosend time
Setting DTMF length
Chang the lock code
Restricting outgoing calls
Restricting long distance calls
Restricting international calls
Terminal reset

ADJUSTING VOICE VOLUME

You can control the volume level of the terminal.

1. Pick up the handset.
2. Press [*][*][1][1].
3. Press to raise [*] or [#] to lower volume.

Note: Some telephones may have their own volume control. Use both the terminal and the telephone volume controls to optimize the sound level.

SETTING ALARM

Alarm feature can be set to ring at a set time. The phone connected to the terminal will ring.

To set up alarm time.

1. Pick up the handset.
2. Press [*][*][1][2][#].
3. Enter time (24 hour time). For 2:30PM, enter [1][4][3][0][#].

To disable alarm

1. Pick up the handset.
2. Press [*][*][1][2][*].

SETTING 1 MINUTE ALERT

When this feature is enabled, a discrete tone is generated at each one minute interval on the receiver during conversation for both incoming and outgoing calls. This tone is to help the user keep track of the phone usage.

To change the setting:

1. Pick up the handset.
2. Press [*][*][1][3].
3. Press [#] to enable or press [*] to disable.

ADJUSTING VOICE VOLUME

You can control the volume level of the terminal.

1. Pick up the handset.
2. Press [*][*][1][1].
3. Press to raise [*] or [#] to lower volume.

Note: Some telephones may have their own volume control. Use both the terminal and the telephone volume controls to optimize the sound level.

SETTING ALARM

Alarm feature can be set to ring at a set time. The phone connected to the terminal will ring.

To set up alarm time.

1. Pick up the handset.
2. Press [*][*][1][2][#].
3. Enter time (24 hour time). For 2:30PM, enter [1][4][3][0][#].

To disable alarm

1. Pick up the handset.
2. Press [*][*][1][2][*].

SETTING 1 MINUTE ALERT

When this feature is enabled, a discrete tone is generated at each one minute interval on the receiver during conversation for both incoming and outgoing calls. This tone is to help the user keep track of the phone usage.

To change the setting:

1. Pick up the handset.
2. Press [*][*][1][3].
3. Press [#] to enable or press [*] to disable.

SETTING CALLER ID MODE

If your phone connected to the terminal is caller ID enabled, you can set the terminal to display the caller identification number or name on the telephoneÕs LCD display.

1. Pick up the handset.
2. Press [*][*][2][1][1][#] for disable the Caller ID feature.
3. Press [*][*][2][1][2][#] for DTMF Standard Type.
4. Press [*][*][2][1][3][#] for FSK (Bellcore) type.

NOTE: The default setting of Caller ID is DTMF type.

SETTING AUTOSEND TIME

When finished entering dial number, the terminal waits a fixed time before attempting to make a call. This Òauto sendÓ time can be changed.

1. Pick up the handset.
2. Press [*][*][2][2]. Then press [4]~[9] or [0]. 4~9 seconds or off.
3. Press [#] .

For example, to set 5 seconds, press [*][*][2][2][5][#] .

Note: Default autosend time is 4 seconds.

SETTING DTMF LENGTH

Some ARS (Automatic Response Service) requires long DTMF tone.

1. Pick up the handset.
2. Press [*][*][2][3].
3. Press [#] for long DTMF and [*] for short DTMF.

CHANG THE LOCK CODE

The lock code prevents the terminal from being used by unauthorized person without your permission. The default lock code is Ò0000 Ó.

To change the lock code:

1. Pick up the handset.
2. Press *31 .
3. Enter old 4 digit lock code followed by #. For example 0000# . Beep sounds as confirmation. If not correct, error tone will sound and the terminal returns to standby mode.
4. Enter new 4 digit lock code followed by # . For example 1234#. Another beep sounds as confirmation.
5. Re-enter 4 digit lock code followed by # . For example 1234#. Another beep sounds as confirmation. If not correct, error tone will sound and the terminal returns to standby mode.

RESTRICTING OUTGOING CALLS

This feature can be used block outgoing calls from being made, but still wish to receive incoming calls at any time.

1. Pick up the handset.
2. Press *32.
3. Enter 4 digit lock code.
4. Press # to enable or * to disable.

Note 1: Default lock code is "0000". To change, see page 16.

Note 2: If someone tries to make a call when outgoing call restriction is enabled, the terminal sounds beep and howler tone.

RESTRICTING LONG DISTANCE CALLS

This feature can be used block long distance calls from being made, but still wish to receive incoming calls and make local calls.

1. Pick up the handset.
2. Press [*][*][3][4].
3. Enter 4 digit lock code. If not correct, error tone will sound and the terminal returns to standby mode.
4. Press [#] to enable or [*] to disable.

Note 1: Default lock code is "[0][0][0][0]". To change, see page 16.

Note 2: If someone tries to make a long distance call when outgoing call restriction is enabled, the terminal sounds beep and howler tone.

RESTRICTING INTERNATIONAL CALLS

This feature can be used block international calls only, but still wish to receive incoming calls and make domestic and local calls.

1. Pick up the handset.
2. Press [*][*][3][3].
3. Enter 4 digit lock code. If not correct, error tone will sound and the terminal returns to standby mode.
4. Press [#] to enable or [*] to disable.

Note 1: Default lock code is "[0][0][0][0]". To change, see page 16.

Note 2: If someone tries to make an international call when international call restriction is enabled, the terminal sounds beep and howler tone.

TERMINAL RESET

Resets the terminal back to the factory default state.

1. Pick up the handset.
2. Press [*][*][3][5] .
3. Enter 4 digit lock code. If not correct, error tone will sound and the terminal returns to standby mode.
4. Press [#] to reset.

Note 1: Default lock code is " [0][0][0][0] ". To change, see page 16.

Note 2: This feature is automatically set after 3 seconds with a confirmation tone.

DATA SERVICE

Serial Cable & USB Cable

Depending on whether you use a serial cable with 9-pin RS-232 connector or a USB cable, the terminal must be set to appropriate Port setting.

1. Pick up the handset.
2. Press [*][*][4][1][1] to select Serial cable.
3. Press [*][*][4][1][2] to select USB cable.

Data Port Speed

There are three speed options. Use appropriate speed setting for you use.

1. Pick up the handset
2. Press [*][*][4][2][1] for high speed data service. (HDR 115.2Kbps)
3. Press [*][*][4][2][2] for low speed data service. (ASYNC 19.2 Kbps)
4. Press [*][*][4][2][3] for PC FAX. (19.2 Kbps)

Receive setting

To receive an incoming Fax or Data call, the terminal must be configured correctly.

1. Pick up the handset
2. Press [*][*][4][3][1] to set Voice and Analog Fax.
3. Press [*][*][4][3][2] to set Received Data once.
4. Press [*][*][4][3][3] to set Receive PC Fax once.
5. Press [*][*][4][3][4] to set to Receive PC Fax always.

axess•tel

Analog FAX Service

Fax Set-Up
Sending Fax Message
Receiving Fax Messages

FAX SET-UP

*** The optional Fax module is required to send or receive fax with analog Fax machine. Connect an analog Fax machine to the terminal with regular RJ-11 phone cord.**

SENDING FAX MESSAGE

You can send and receive fax messages using a fax machine connected to the terminal.

Manual dialing method

1. Load documents to the fax machine.
2. Pick up the handset or press On-Hook button of the fax machine.
3. Press [*] [*] [9] [1] and wait for dial tone.
4. Dial destination fax number when you hear dial tone.

Use Pre-digit method to send fax without picking up the handset.

1. Load documents to the fax machine.
2. Pick up the handset or press On-Hook button of the fax machine.
3. Dial [*] [9] [9] [*] and destination fax number in sequence.
4. The terminal makes the call automatically.

RECEIVING FAX MESSAGE

You can set the terminal to receive Fax Once or Always.

1. Pick up the handset or press On-hook key of the fax machine.
2. Press [*] [*] [4] [2] [3] to set Receive PC Fax Once.
3. Press [*] [*] [4] [2] [4] to set to Receive PC Fax Always.
4. Wait for a confirmation dial tone. The terminal is ready to receive fax messages.

NOTE1: If you set the terminal to receive Fax always, the terminal will transfer every call to the fax machine connected. If you set the terminal to receive fax once mode, the terminal will transfer the first incoming call to the fax machine and set back to voice call mode automatically.

To set the terminal to voice mode.

1. Pick up the handset or press On-Hook key.
2. Press [*][*][4][2][1]
3. Wait for a confirmation dial tone.

Optional Features

Call Waiting
Three-Way Calling
Caller ID
Voice Mail Service

CALL WAITING

Call Waiting is a feature, which enables you to be alerted to a second incoming call while you are on the first call of your telephone. Contact your service provider to activate or deactivate Call Waiting.

1. You will hear a beep from the earpiece when a second call is incoming.
2. Press the hook shortly to answer to the second call.
3. Press the hook again to get back to the first call.

THREE-WAY CALLING

Three-Way Calling is a feature that enables you to set up a three-way conversation with two other users. Contact your service provider to activate or deactivate Three-way Calling.

1. Place a call.
2. Press the hook shortly and place another call.
3. When the second call is answered, press the hook lightly to start a three-way call.

CALLER ID

See Page 26: Setting Caller ID Mode

VOICE MAIL SERVICE

Voice Mail Service is a feature that allows the terminal to receive voice mail and forward it to your telephone when you press a certain sequence of keypad number. Contact your service provider to activate or deactivate Voice Mail Service.

Miscellaneous

Menu Options Table
Troubleshooting
Specifications

MENU OPTIONS TABLE

MENU			EXAMPLE	REMAKE
Enter the menu item by pressing ** and the menu option.				
1. Sound	1. Voice Volume Control	* Louder # Lower	**11*(louder) **11*(lower)	a confirmatiom beep will sound 3 seconds
	2. Setting Alarm	*, time(24hr),#	**12#1136#(11:36 AM) **12#1410#(2:10PM)	Alarm(ringer) rings once each day for 1 min
	3. Setting 1 Minute Alert	* Off / # On	**13*(off) **13#(on)	Alerts each minute during conversation
	4. Setting Connection Alert	* Off / # On	**14*(off) **14#(on)	Alerts when the call is connection
	5. Voice privacy Alert	* Off / # On	**15*(off) **15#(on)	Alerts for voice Privacy
2. General	1. Caller ID	0. No Caller ID 1. DTMF Standard 2. FSK(Bellcore)	**210(no caller id) **211(dtmf) **212(fsk)	
	2. Auto send time	4~9 seconds, 0 OFF	**2134(4 seconds) **2130(off)	When off, must press * or # to make the call
	3. DTMF Length	* Short / # long	**23*(Short) **23#(Long)	
3. Security	1. Changing Lock Code	Old lock code, new lock code, #, new lock code again, #	To change from "0000" to "1234" **3100000(confirmation tone)	
	2. Restricting Outgoing Calls	lock code, * on or # off	If lock code is 0000: **320000*(on) **320000#(off)	
	3. Restricting International Calls	lock code, * on or # off	If lock code is 0000: **330000*(on) **330000#(off)	
	4. Restricting Long Distance Calls	lock code, * on or # off	If lock code is 0000: **340000*(on) **34000 (off)	
	5. Terminal Reset	lock code, #	If lock code is 0000: **350000#	Resets auto send time, alarm, lock code, call restrictions (outgoing, int'l, long), caller ID type, voice privacy alert, conn ection alert, and 1 minute alert.
4. Data Service	1. Port Setting	1. Serial 2. USB	**411(Serial) **412(USB)	
	2. Speed Setting	1. HDR (115.2K) 2. Async (19.2K) 3. PC FAX (19.2K)	**421(115.2K) **422(19.2Kpbs async data) **423(19.2Kpbs pc fax)	
	3. Receive Mode	1. Voice only 2. Data one time 3. Fax one time 4. Fax always	**431 **432 **433 **434	

TROUBLESHOOTING

Troubleshoot the conventional wired telephone

In the event you are unable to place or receive telephone calls, first be sure that the connection wire is properly connected to the RJ-11 phone port on the terminal and to the RJ-11 port of the telephone. If unsure whether or not the telephone is operational, connect a telephone, which is known to be operational to the terminal. If service is available with the operational telephone, replace or repair your telephone equipment. If service is still not available, then follow instructions under "Troubleshoot the Fixed Wireless Terminal".

Troubleshoot the Fixed Wireless Terminal

Check for the appropriate power indication on the LED. If no power, check the adaptor (or External Power Supply) connection between the electrical outlet and the terminal.
Check for the appropriate Received Signal Strength Indication (RSSI), Power, and Message Indication through the designated LED, respectively.

SPECIFICATIONS

Frequency Range	ACW-T800	TX: 824~849MHz RX: 869~894MHz
	ACW-T1900	TX: 1850~1910 MHz RX: 1930~1990 MHz
Channel Bandwidth		CDMA 1.25 MHz
Multi Connection		4 REN
RJ-11 Phone/Analog Fax Port		2
Power Supply (Adapter)		Input: AC 110~240V 50~60Hz Output: DC 15V 1A
Temperature of operation Relative humidity		-20 ~ +50 degrees C 5% ~ 95%
Temperature of storage		-25 ~ +75 degrees C
Dimension		200x170x48.5 (mm)
Weight (without internal battery)		560g

Safety Information

1 . SAFETY INFORMATION FOR FIXED WIRELESS TERMINALS

.POTE NTIALLY EXPLOSIVE ATMOSPHERES

Turn your phone OFF when in any area with a potentially explosive atmosphere and obey all signs and instructions. Sparks in such areas could cauls e an explosion or fire resulting in bodily injury or even death.

.

INTERFERENCE TO MEDICAL DIVICES

Certain electronic equipment may be shielded against RF signal from you wireless phone. (pacemakers, Hearing Aids, and so on) Turn your phone OFF in health care facilities when any regulations posted in these areas instruct you to do so.

RF signals may affect improperly installed or inadequately shielded electronic system in motor vehicles.

.EXPOSURE TO RF ENERGY

Use only the supplied or an approved replacement antenna.

Do not touch the antenna unnecessarily when the phone is in use.

Do not move the antenna close to, or touching any exposed part of the body when making a call.

SAR INFORMATION

THIS MODEL PHONE MEETS THE GOVERNMENT'S
REQUIREMENTS FOR EXPOSURE TO RADIO WAVES.

Your wireless Terminal is a radio transmitter and receiver. It is designed and manufactured not to exceed the emission limits for exposure to radiofrequency (RF) energy set by the Federal Communications Commission of the U.S. Government. These limits are part of comprehensive guidelines and establish permitted levels of RF energy for the general population. The guidelines are based on standards that were developed by independent scientific organizations through periodic and thorough evaluation of scientific studies. The standards include a substantial safety margin designed to assure the safety of all persons, regardless of age and health. The exposure standard for wireless mobile phones employs a unit of measurement known as the Specific Absorption Rate, or SAR. The SAR limit set by the FCC is 1.6 W/kg. * Tests for SAR are conducted with the phone transmitting at its highest certified power level in all tested frequency bands. Although the SAR is determined at the highest certified power level, the actual SAR level of the phone while operating can be well below the maximum value. This is because the phone is designed to operate at multiple power levels so as to use only the power required to reach the network. In general, the closer you are to a wireless base station antenna, the lower the power output. Before a phone model is available for sale to the public, it must be tested and certified to the FCC that it does not exceed the limit established by the government adopted requirement for safe exposure. The tests are performed in positions and locations (e.g., at the ear and worn on the body) as required by the FCC for each model. The highest SAR value for this model when tested for use at the when worn on the body, as described in this user guide, is **0.823 W/Kg**. (Body-worn measurements differ among models, depending upon available accessories and FCC requirements). While there may be differences between the SAR levels of various and at various positions, they all meet the government requirement for safe exposure. The FCC has granted an Equipment Authorization for this model with all reported SAR levels evaluated as in compliance with the FCC RF exposure guidelines. SAR information on this model is on file with the FCC and can be found under the Display Grant section of http://www.fcc.gov/ oet/fccid after searching on **FCC ID: PH7AXWT800**.

Additional information on Specific Absorption Rates (SAR) can be found on the Cellular Telecommunications Industry Association (CTIA) web-site at http://www.wow-com.com.
* In the United States and Canada, the SAR limit for mobile phones used by the public is 1.6 watts/kg (W/kg) averaged over one gram of tissue. The standard incorporates a sub-stantial margin of safety to give additional protection for the public and to account for any variations in measurements.

SAFETY INFORMATION FOR RF EXPOSURE

Body worn operation

This device was tested for typical body-worn operations with the back of the phone kept 25 mm. from the body. To maintain compliance with FCC RF exposure requirements, use only belt-clips, holsters or similar accessories that maintain a 25 mm. separation distance between the user's body and the back of the phone, including the antenna. The use of belt-clips, holsters and similar accessories should not contain metallic components in its assembly. The use of accessories that do not satisfy these requirements may not comply with FCC RF exposure requirements, and should be avoided.

FCC Compliance Information

This device complies with Part 15 of FCC Rules.
Operation is subject to the following two conditions:

(1) This device may not cause harmful interference, and
(2) This device must accept any interference received.
Including interference that may cause undesired operation.

U.S.A.

U.S.FEDERAL COMMUNICATIONS COMMISSION

RADIO FREQUENCY INTERFERENCE STATEMENT

INFORMATION TO THE USER

NOTE : This equipment has been tested and found to comply with the limits for a Class B digital device pursuant to Part 15 of the FCC Rules.

These limits are designed to provide reasonable protection against harmful Interference in a residential installation This equipment generates, uses, and can radiate radio frequency energy and, if Not installed and used in accordance with the instructions, may cause harmful Interference to radio communications. However, there is no guarantee that interference will not occur in a particular Installation. If this equipment does cause harmful interference to radio or television reception, which can be determined by turning the equipment off and on, the user is encouraged to try to correct the interference by one or more of the following measures:

- Reorient or relocate the receiving antenna.
- Increase the separation between the equipment and receiver.
- Connect the equipment into an outlet of a circuit different from that to which the receiver is connected.
- Consult the dealer or an experienced radio/TV technician for assistance.

Changes or modification not expressly approved by the party responsible for Compliance could void the user's authority to operate the equipment. Connecting of peripherals requires the use of grounded shielded signal cables.