Test Report

For

Applicant	**:**	**Pro Broadband Inc.**
Equipment Type	**:**	**AV-LINK**
Model	**:**	**AVL-T1**
FCC ID	**:**	**PHB-AVLTX010216-1**

Report No. : 00CH043FI

Test Report Certification

QuieTek Corporation

No.75-1, Wang-Yeh Valley, Yung-Hsing, Chiung-Lin,
Hsin-Chu County, Taiwan, R.O.C.
Tel : 886-3-592-8858, Fax: 886-3-592-8859
E-Mail : quietek@ms24.hinet.net

Accredited by NIST(NVLAP), VCCI, BSMI, DNV, TUV

Applicant	: Pro Broadband Inc.
Address	: F1.5-1, No.6, Lane 99, Pu-Ding Rd., Hsinchu, 300 Taiwan, R.O.C.
Equipment Type	: AV-LINK
Model	: AVL-T1
FCC ID.	: PHB-AVLTX010216-1
Measurement Standard	: FCC Part 15 Subpart C Paragraph 15.249
Measurement Procedure	: ANSI C63.4 /1992
Operation Voltage	: 12VDC
Test Result	: Complied
Test Date	: Dec.28, 2000
Report No.	: 00CH043FI

The Test Results relate only to the samples tested.
The test report shall not be reproduced except in full without the written approval of QuieTek Corporation.
This report must not be used to claim product endorsement by NVLAP any agency of the U.S. Government

Documented by: Lisa Chen	Test Engineer: Calien Kang	Approved: Gene Chang
Lisa Chen	Calien Kang	Gene Chang

TABLE OF CONTENTS

Description Page

1. GENERAL INFORMATION 4

1.1 EUT Description 4
1.2 Tested System Details 5
1.3 EUT Configuration 6
1.4 EUT Exercise Software 6
1.5 Test performed 6
1.6 Test Facility 7

2. CONDUCTED EMISSION 8

2.1 Test Equipment List 8
2.2 Test Setup 8
2.3 Limits 8
2.4 Test Procedure 9
2.5 Test Results 9

3. RADIATED EMISSION 10

3.1 Test Equipment 10
3.2 Test Setup 10
3.3 Limits 11
3.4 Test Procedure 12
3.5 Test Results 12

4. EMI REDUCTION METHOD DURING COMPLIANCE TESTING 13

5. ATTACHMENT 14

Attachment 1: Summary of Test Results

Attachment 2: EUT Test Photographs

Attachment 3: EUT Detailed Photographs

1. General Information

1.1 EUT Description

Applicant	:	Pro Broadband Inc.
Address		F1.5-1, No.6, Lane 99, Pu-Ding Rd., Hsinchu, 300 Taiwan, R.O.C.
Equipment Type	:	AV-LINK
Model	:	AVL-T1
FCC ID	:	PHB-AVLTX010216-1
Operation Voltage	:	12VDC
Frequency Range	:	2400MHz to 2483.5MHz
Channel Number	:	3
Frequency of each Channel Working Frequency	:	Channel 1: 2.4515GHz, Channel 2: 2.4315GHz, Channel 3: 2.4115GHz
Type of Modulation	:	FM
Operator Selection of Operating Frequency	:	Manual Switch
RCA(3)-Audio Cable	:	Non-shielded, 1.8m
Power Adapter	:	DVE, DV-1250 Cable Out: Non-shielded, 1.8m

Remark :
1. This device is a 2.4GHz AV-LINK included a 2.4GHz transmitting function.
2. These tests were conducted on a sample of the equipment for the purpose of demonstrating compliance with Part 15 Subpart C Paragraph 15.249 for non-spread spectrum devices.
3. The EUT is modulated by the CCD internally. The peak power measured in the occupied bandwidth was selected as final rewet.
4. This device is a composite device in accordance with Part 15 regulations. The function receiving was, measured and made a test report that the report number is 00CH043F under Verification.

1.2 Tested System Details

The types for all equipment, plus descriptions of all cables used in the tested system (including inserted cards) are:

1.2.1 AV-LINK(EUT)

Model Number	: AVL-T1
Serial Number	: N/A
FCC ID	: PHB-AVLTX010216-1
Manufacturer	: Pro Broadband Inc.
RCA(3)-Audio Cable	: Non-shielded, 1.8m
Power Adapter	: DVE, DV-1250 Cable Out: Non-shielded, 1.8m

1.2.2 DVD

Model Number	: DVP-K800D
Serial Number	: 960E411
FCC ID	: AN06282
Manufacturer	: SONY
Data Cable	: S-Video Cable, Shielded, 1.2m
Power Cord	: Non-shielded,1.8m

1.2.3 Television

Model Number	: KV-14NX
Serial Number	: 103125
BSMI ID	: 3863A019
Manufacturer	: SONY
Power Cord	: Non-shielded, 1.8m

1.2.4 AV-LINK(RX)

Model Number	: AVL-R1
Serial Number	: N/A
FCC ID	: Verification
Manufacturer	: Pro Broadband Inc.
RCA(3)-Audio Cable	: Non-shielded, 1.8m
Power Adapter	: DVE, DV-1250 Cable Out: Non-shielded, 1.8m

1.3 EUT Configuration

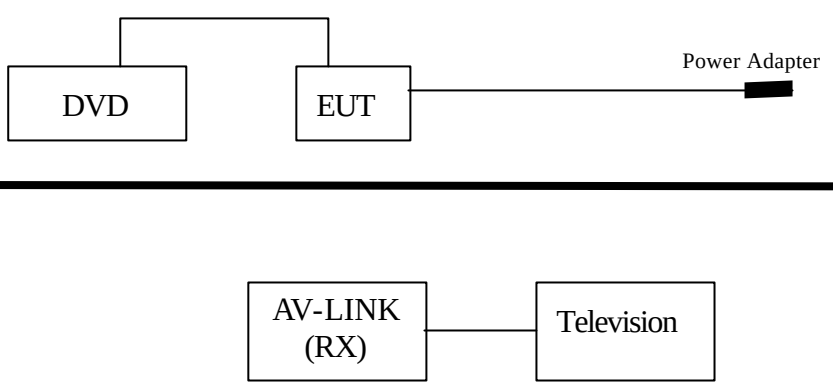

1.4 EUT Exercise Software

The EUT exercise program used during conducted testing was designed to exercise the EUT in a manner similar to a typical use. The exercise sequence is listed as below:

1.4.1 Setup the EUT and simulators as shown on 1.3.

1.4.2 Turn on the power of all equipment.

1.4.3 The EUT will transmit the radio signal form transmitter.

1.4.4 Repeat the above procedure 1.4.2 to 1.4.3

1.5 Test performed

Conducted emissions were invested over the frequency range from **0.15MHz to 30MHz** using a receiver bandwidth of 9kHz.

Radiated emissions were invested over the frequency range from **30MHz to 1000MHz** using a receiver bandwidth of 120kHz and the frequency range from **1GHz to 24GHz** using a receiver bandwidth of 1MHz.

Radiated testing was performed at an antenna to EUT distance of 3 meters.

1.6 Test Facility

Ambient conditions in the laboratory:

Items	Required (IEC 68-1)	Actual
Temperature (°C)	15-35	20-35
Humidity (%RH)	25-75	50-65
Barometric pressure (mbar)	860-1060	950-1000

Site Description: November 3, 1998 File on
Federal Communications Commission
FCC Engineering Laboratory
7435 Oakland Mills Road
Columbia, MD 21046
Reference 31040/SIT1300F2

September 30, 1998 Accreditation on NVLAP
NVLAP Lab Code: 200347-0

February 23, 1999 Accreditation on DNV
Statement No. : 413-99-LAB11

December 8, 1998 Registration on VCCI
Registration No. for No.2 Shielded Room C-858
Registration No. for No.1 Open Area Test Site R-823
Registration No. for No.2 Open Area Test Site R-835

January 04, 1999 Accreditation on TUV Rheinland
Certificate No.: I9865712-9901

Name of firm : QuieTek Corporation

Site location : No.75-1, Wang-Yeh Valley, Yung-Hsing Tsuen,
Chiung-Lin, Hsin-Chu County, Taiwan, R.O.C.

2. Conducted Emission

2.1 Test Equipment List

The following test equipment are used during the conducted emission test:

Item	Instrument	Manufacturer	Type No./Serial No	Last Cal.	Remark
1	Test Receiver	R & S	ESCS 30/825442/17	May, 2000	
2	L.I.S.N.	R & S	ESH3-Z5/825016/6	May, 2000	EUT
3	L.I.S.N.	Kyoritsu	KNW-407/8-1420-3	May, 2000	Peripherals
4	Pulse Limiter	R & S	ESH3-Z2	N/A	
5	N0.2 Shielded Room			N/A	

Note: All equipment upon which need to calibrated are with calibration period of 1 year.

2.2 Test Setup

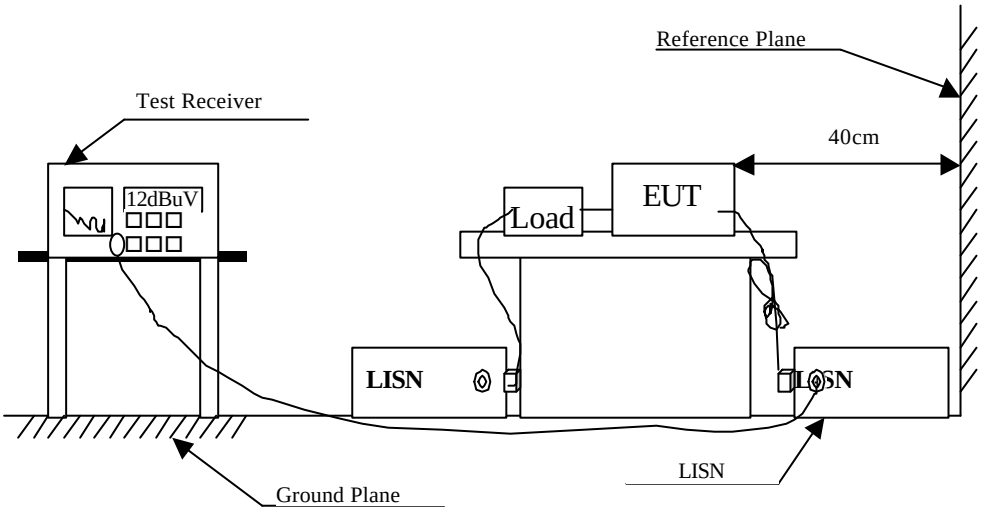

2.3 Limits

FCC Part 15 Paragraph 15.207 (dBuV)		
Frequency MHz	Limits	
	uV	dBuV
0.45 - 30	250	48.0

2.4 Test Procedure

The EUT and simulators are connected to the main power through a line impedance stabilization network (L.I.S.N.). This provides a 50 ohm /50uH coupling impedance for the measuring equipment. The peripheral devices are also connected to the main power through a LISN that provides a 50ohm/50uH coupling impedance with 50ohm termination. (Please refer to the block diagram of the test setup and photographs.)

Both sides of A.C. line are checked for maximum conducted interference. In order to find the maximum emission, the relative positions of equipment and all of the interface cables must be changed according to ANSI C63.4 /1992 on conducted measurement.

The bandwidth of the field strength meter (R & S Test Receiver ESCS 30) is set at 9Khz.

2.5 Test Results

The conducted emission from the EUT is measured and shown in Attachment 1. The acceptance criterion was met and the EUT passed the test.

3. Radiated Emission

3.1 Test Equipment

The following test equipment are used during the radiated emission test:

Test Site		Equipment	Manufacturer	Model No./Serial No.	Last Cal.
Site # 1	X	Test Receiver	R & S	ESCS 30 / 825442/14	May, 2000
		Spectrum Analyzer	Advantest	R3261C / 71720140	May, 2000
		Pre-Amplifier	HP	8447D/3307A01812	May, 2000
	X	Bilog Antenna	Chase	CBL6112B / 12452	Sep., 2000
	X	Horn Antenna	EM	EM6917 / 103325	May, 2000
Site # 2	X	Test Receiver	R & S	ESCS 30 / 825442/17	May, 2000
		Spectrum Analyzer	Advantest	R3261C / 71720609	May, 2000
		Pre-Amplifier	HP	8447D/3307A01814	May, 2000
	X	Bilog Antenna	Chase	CBL6112B / 2455	Sep., 2000
	X	Horn Antenna	EM	EM6917 / 103325	May, 2000

Note: 1. All equipment upon which need to calibrated are with calibration period of 1 year.

2. Mark "X" test instruments are used to measure the final test results.

3.2 Test Setup

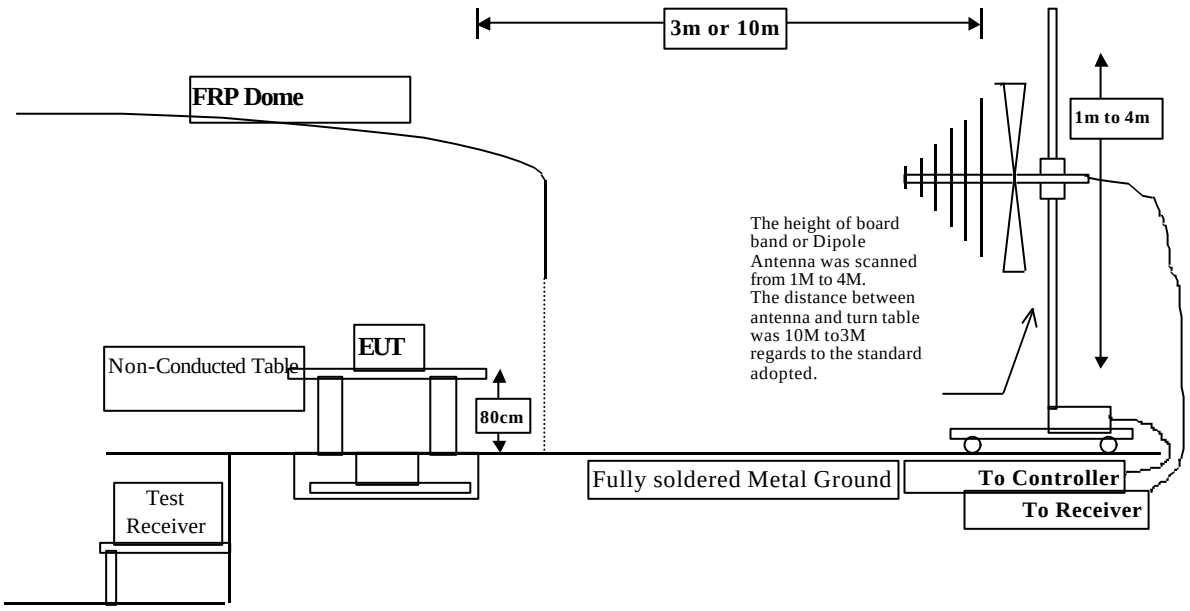

3.3 Limits

➢ **Fundamental and Harmonics Emission Limits**

Frequency	Field Strength of Fundamental		Field Strength of Harmonics	
MHz	(mV/m @3m)	(dBuV/m @3m)	(uV/m @3m)	(dBuV/m @3m)
2400-2483.5	50	94 (Average) 114 (Peak)	500	54 (Average) 74 (Peak)

➢ **General Radiated Emission Limits**

Emissions radiated outside of the specified frequency bands, except for harmonics, shall be attenuated by at least 50dB below the level of the fundamental or to the general radiated emission limits in paragraph 15.209, whichever is the lesser attenuation.

Frequency	50dB below of the fundamental	15.209 Limits	General Radiated Limits
MHz	(dBuV/m @3m)	(dBuV/m @3m)	(dBuV/m @3m)
30-88	40	40	40
88-216	43.5	43.5	43.5
216-960	44	46	46
Above 960	44	54	54

Remarks : 1. RF Line Voltage (dBuV) = 20 log RF Line Voltage (uV)
2. In the Above Table, the tighter limit applies at the band edges.
3. Distance refers to the distance in meters between the measuring instrument antenna and the closed point of any part of the device or system.

3.4 Test Procedure

The EUT and its simulators are placed on a turn table which is 0.8 meter above ground. The turn table can rotate 360 degrees to determine the position of the maximum emission level.
The EUT was positioned such that the distance from antenna to the EUT was 3 meters .
The antenna can move up and down between 1 meter and 4 meters to find out the maximum emission level.
Both horizontal and vertical polarization of the antenna are set on measurement. In order to find the maximum emission, all of the interface cables must be manipulated according to ANSI C63.4 /1992 on radiated measurement.
The bandwidth below 1Ghz setting on the field strength meter (R&S Test Receiver ESCS 30) is 120 kHz and above 1Ghz is 1MHz.

3.5 Test Results

The radiated emission from the EUT is measured and shown in Attachment 1. The acceptance criterion was met and the EUT passed the test.

4. EMI Reduction Method During Compliance Testing

No modification was made during testing.

5. Attachment

Attachment 1: Summary of Test Results	Number of Pages: 11
Attachment 2: EUT Test Photographs	Number of Pages: 3
Attachment 3: EUT Detailed photographs	Number of Pages: 9

Attachment 1 : Summary of Test Results

The test results in the emission were performed according to the requirements of measurement standard and process. QuieTek Corporation is assumed full responsibility for the accuracy and completeness of these measurements. The test data of the emission are listed as the attached data.

All the tests were carried out with the EUT (Wireless Video Link) in normal operation, which was defined as:

(1) Channel 3 (Middle frequency)
(2) Channel 2 (Lightest frequency)
(3) Channel 1 (Lowest frequency)

The EUT passed all the tests.

The uncertainty is calculated in accordance with NAMAS NIS 81, The total uncertainty for this test is as follows:

➢ **Emission Test**

- Uncertainty in the Conducted Emission Test: < ± 2.0 dB
- Uncertainty in the field strength measured: < ± 4.0 dB

CONDUCTED EMISSION DATA

Date of Test	:	Dec.28, 2000	EUT	:	AV-LINK
Test Mode	:	Normal	Detect Mode	:	Quasi-Peak

	Frequency MHz	Cable Loss dB	LISN Factor dB	Reading Level dBuV	Measurement Level dBuV	Limits dBuV
Line 1:						
	0.584	0.07	0.10	26.82	26.99	48.00
	0.693	0.08	0.10	25.01	25.19	48.00
	1.215	0.11	0.11	23.55	23.77	48.00
*	3.596	0.18	0.16	42.50	42.84	48.00
	21.200	0.36	0.47	17.00	17.83	48.00
	25.443	0.38	0.54	29.28	30.20	48.00
Line 2:						
	0.691	0.08	0.10	23.61	23.79	48.00
	0.943	0.10	0.10	23.77	23.97	48.00
	1.306	0.12	0.11	23.47	23.70	48.00
*	3.594	0.18	0.16	41.11	41.45	48.00
	12.299	0.30	0.28	15.84	16.42	48.00
	25.442	0.38	0.54	25.93	26.85	48.00

Remarks :

1. " * " means that this data is the worst emission level.
2. The average measurement was not performed when the peak measured data under the limit of average detection.

General Radiated Emission Data

Date of Test	:	Dec.28, 2000	EUT	:	AV-LINK
Test Mode	:	Channel 3	Test Site	:	Open Site 2

HORIZONTAL :

Freq. MHz	Cable Loss dB	Probe Factor dB/m	PreAMP dB	Reading Level dBuV	Measurement dBuV/m	Margin dB	Limit dBuV/m	Ant cm	Turn deg
30.000	1.02	19.36	26.00	36.40	30.78	8.72	39.50	0	0
58.130	1.13	5.79	26.00	45.40	26.32	13.68	40.00	0	0
76.560	1.21	9.20	26.00	36.40	20.81	19.19	40.00	0	0
96.930	1.29	11.94	26.00	33.40	20.63	22.87	43.50	0	0
129.910	1.43	12.62	26.00	38.40	26.45	17.05	43.50	0	0
* 460.680	2.78	17.24	26.00	49.80	43.83	2.17	46.00	0	0

VERTICAL :

Freq. MHz	Cable Loss dB	Probe Factor dB/m	PreAMP dB	Reading Level dBuV	Measurement dBuV/m	Margin dB	Limit dBuV/m	Ant cm	Turn deg
* 57.160	1.13	7.90	26.00	52.40	35.42	4.58	40.00	0	0
255.040	1.94	13.39	26.00	36.20	25.53	20.47	46.00	0	0
338.460	2.28	14.46	26.00	35.80	26.55	19.45	46.00	0	0
357.860	2.36	15.53	26.00	37.20	29.10	16.90	46.00	0	0
460.680	2.78	16.92	26.00	43.80	37.50	8.50	46.00	0	0
504.330	2.96	17.40	26.00	35.80	30.16	15.84	46.00	0	0

Remarks:

1. All Readings below 1GHz are Quasi-Peak, above are average value.
2. " * ", means this data is the worst emission level.
3. Emission Level = Reading Level + Antenna Factor + Cable loss

General Radiated Emission Data

Date of Test	:	Dec.28, 2000	EUT	:	AV-LINK
Test Mode	:	Channel 2	Test Site	:	Open Site 2

	Freq. MHz	Cable Loss dB	Probe Factor dB/m	PreAMP dB	Reading Level dBuV	Measurement dBuV/m	Margin dB	Limit dBuV/m	Ant cm	Turn deg
HORIZONTAL :										
	30.000	1.02	19.36	26.00	36.20	30.58	8.92	39.50	0	0
	55.220	1.12	6.04	26.00	45.00	26.16	13.84	40.00	0	0
	74.620	1.20	8.63	26.00	37.00	20.83	19.17	40.00	0	0
	96.930	1.29	11.94	26.00	33.40	20.63	22.87	43.50	0	0
	268.620	2.00	13.17	26.00	31.80	20.96	25.04	46.00	0	0
*	461.650	2.79	17.37	26.00	50.40	44.56	1.44	46.00	0	0

	Freq. MHz	Cable Loss dB	Probe Factor dB/m	PreAMP dB	Reading Level dBuV	Measurement dBuV/m	Margin dB	Limit dBuV/m	Ant cm	Turn deg
VERTICAL :										
*	57.160	1.13	7.90	26.00	52.60	35.62	4.38	40.00	0	0
	74.620	1.20	9.80	26.00	43.00	28.00	12.00	40.00	0	0
	131.850	1.44	11.86	26.00	36.20	23.50	20.00	43.50	0	0
	248.250	1.91	13.16	26.00	36.80	25.88	20.12	46.00	0	0
	410.240	2.58	17.05	26.00	34.20	27.82	18.18	46.00	0	0
	460.680	2.78	16.92	26.00	43.80	37.50	8.50	46.00	0	0

Remarks:

1. All Readings below 1GHz are Quasi-Peak, above are average value.
2. " * ", means this data is the worst emission level.
3. Emission Level = Reading Level + Antenna Factor + Cable loss

General Radiated Emission Data

Date of Test	:	Dec.28, 2000	EUT	:	AV-LINK
Test Mode	:	Channel 1	Test Site	:	Open Site 2

Freq. MHz	Cable Loss dB	Probe Factor dB/m	PreAMP dB	Reading Level dBuV	Measurement HORIZONTAL dBuV/m	Margin dB	Limit dBuV/m	Ant cm	Turn deg
HORIZONTAL :									
30.000	1.02	19.36	26.00	37.00	31.38	8.12	39.50	0	0
64.920	1.16	6.64	26.00	52.20	34.00	6.00	40.00	0	0
77.530	1.21	9.46	26.00	38.80	23.47	16.53	40.00	0	0
129.910	1.43	12.62	26.00	33.80	21.85	21.65	43.50	0	0
173.560	1.60	10.54	26.00	33.40	19.54	23.96	43.50	0	0
* 461.650	2.79	17.37	26.00	49.80	43.96	2.04	46.00	0	0

Freq. MHz	Cable Loss dB	Probe Factor dB/m	PreAMP dB	Reading Level dBuV	Measurement VERTICAL dBuV/m	Margin dB	Limit dBuV/m	Ant cm	Turn deg
VERTICAL :									
* 58.130	1.13	8.11	26.00	49.60	32.85	7.15	40.00	0	0
77.530	1.21	9.45	26.00	40.60	25.27	14.73	40.00	0	0
173.560	1.60	8.27	26.00	37.60	21.48	22.02	43.50	0	0
255.040	1.94	13.39	26.00	34.20	23.53	22.47	46.00	0	0
346.220	2.32	15.10	26.00	35.20	26.61	19.39	46.00	0	0
460.680	2.78	16.92	26.00	43.80	37.50	8.50	46.00	0	0

Remarks:

1. All Readings below 1GHz are Quasi-Peak, above are average value.
2. " * ", means this data is the worst emission level.
3. Emission Level = Reading Level + Antenna Factor + Cable loss

Fundamental Radiated Emission Data

Date of Test	:	Dec.28, 2000	EUT	:	AV-LINK
Test Mode	:	Normal	Test Site	:	Open Site 2

Freq. MHz	Cable Loss dB	Probe Factor dB/m	PreAMP dB	Reading Level dBuV	Measurement dBuV/m	Margin dB	Limit dBuV/m	Ant cm	Turn deg
Peak Detector (Horizontal):									
Channel 3									
2451.500	3.88	29.35	0.00	57.94	91.16	22.84	114.00	0	0
Channel 2									
2431.500	3.86	29.31	0.00	60.63	93.79	20.21	114.00	0	0
Channel 1									
2411.500	3.84	29.26	0.00	59.72	92.82	21.18	114.00	0	0

Freq. MHz	Cable Loss dB	Probe Factor dB/m	PreAMP dB	Reading Level dBuV	Measurement dBuV/m	Margin dB	Limit dBuV/m	Ant cm	Turn deg
Peak Detector (Vertical):									
Channel 3									
2451.500	3.88	29.35	0.00	59.44	92.66	21.34	114.00	0	0
Channel 2									
2431.800	3.86	29.31	0.00	58.71	91.87	22.13	114.00	0	0
Channel 1									
2411.500	3.84	29.26	0.00	58.71	91.81	22.19	114.00	0	0

Remarks:

1. All Readings below 1GHz are Quasi-Peak, above are average value.
2. " * ", means this data is the worst emission level.
3. Emission Level = Reading Level + Antenna Factor + Cable loss
4. The average measurement was not performed when the peak measured data under the limit of average detection.

Harmonic Radiated Emission Data

Date of Test	:	Dec.28, 2000	EUT	:	AV-LINK
Test Mode	:	Channel 3	Test Site	:	Open Site 2

Freq. MHz	Cable Loss dB	Probe Factor dB/m	PreAMP dB	Reading Level dBuV	Measurement dBuV/m	Margin dB	Limit dBuV/m	Ant cm	Turn deg
Horizontal:									
Peak Detector									
4823.000	6.27	33.50	34.77	46.74	51.74	22.26	74.00	0	0
7234.580	8.32	36.24	34.90	39.50	<49.16	24.84	74.00	0	0
9646.080	10.17	37.43	35.10	39.56	<52.05	21.95	74.00	0	0
12057.52	11.90	39.12	34.66	40.06	<56.42	17.58	74.00	0	0
Average Detector									
12057.52	11.90	39.12	34.66	31.54	<47.90	6.10	54.00	0	0
Vertical:									
Peak Detector									
4823.060	6.27	33.50	34.77	45.66	50.66	23.34	74.00	0	0
7234.560	8.32	36.24	34.90	38.86	<48.52	25.48	74.00	0	0
9646.100	10.17	37.43	35.10	39.31	<51.80	22.20	74.00	0	0
12057.58	11.90	39.12	34.66	39.81	<56.17	17.83	74.00	0	0
Average Detector									
12057.58	11.90	39.12	34.66	31.97	<48.33	5.67	54.00	0	0

Remarks:

1. All Readings below 1GHz are Quasi-Peak, above are average value.
2. " * ", means this data is the worst emission level.
3. Emission Level = Reading Level + Antenna Factor + Cable loss
4. The average measurement was not performed when the peak measured data under the limit of average detection.

Harmonic Radiated Emission Data

Date of Test	:	Dec.28, 2000	EUT	:	AV-LINK
Test Mode	:	Channel 2	Test Site	:	Open Site 2

Freq. MHz	Cable Loss dB	Probe Factor dB/m	PreAMP dB	Reading Level dBuV	Measurement dBuV/m	Margin dB	Limit dBuV/m	Ant cm	Turn deg
Horizontal:									
Peak Detector									
4863.100	6.30	33.54	34.76	46.79	51.88	22.12	74.00	0	0
7294.580	8.37	36.29	34.90	38.75	<48.50	25.50	74.00	0	0
9726.160	10.23	37.44	35.10	40.36	<52.93	21.07	74.00	0	0
12157.66	11.97	39.16	34.58	39.67	<56.22	17.78	74.00	0	0
Average Detector									
12157.66	11.97	39.16	34.58	30.97	<47.52	6.48	54.00	0	0
Vertical:									
Peak Detector									
4863.140	6.30	33.54	34.76	45.73	50.82	23.18	74.00	0	0
7294.620	8.37	36.29	34.90	38.71	<48.46	25.54	74.00	0	0
9726.180	10.23	37.44	35.10	39.76	<52.33	21.67	74.00	0	0
12157.70	11.97	39.16	34.58	38.87	<55.42	18.58	74.00	0	0
Average Detector									
12157.70	11.97	39.16	34.58	31.46	<48.01	5.99	54.00	0	0

Remarks:

1. All Readings below 1GHz are Quasi-Peak, above are average value.
2. " * ", means this data is the worst emission level.
3. Emission Level = Reading Level + Antenna Factor + Cable loss
4. The average measurement was not performed when the peak measured data under the limit of average detection.

Harmonic Radiated Emission Data

Date of Test	:	Dec.28, 2000	EUT	:	AV-LINK
Test Mode	:	Channel 1	Test Site	:	Open Site 2

Freq. MHz	Cable Loss dB	Probe Factor dB/m	PreAMP dB	Reading Level dBuV	Measurement dBuV/m	Margin dB	Limit dBuV/m	Ant cm	Turn deg
Horizontal:									
Peak Detector									
4903.080	6.34	33.58	34.74	46.98	52.15	21.85	74.00	0	0
7354.720	8.42	36.36	34.90	39.63	<49.51	24.49	74.00	0	0
9806.300	10.29	37.46	35.10	40.15	<52.80	21.20	74.00	0	0
12257.92	12.04	39.20	34.50	39.55	<56.29	17.71	74.00	0	0
Average Detector									
12257.92	12.04	39.20	34.50	31.47	<48.21	5.79	54.00	0	0
Vertical:									
Peak Detector									
4903.040	6.34	33.58	34.74	45.63	50.80	23.20	74.00	0	0
7354.700	8.42	36.36	34.90	39.30	<49.18	24.82	74.00	0	0
9806.280	10.29	37.46	35.10	39.88	<52.53	21.47	74.00	0	0
12257.90	12.04	39.20	34.50	39.77	<56.51	17.49	74.00	0	0
Average Detector									
12257.90	12.04	39.20	34.50	31.85	<48.59	5.41	54.00	0	0

Remarks:

1. All Readings below 1GHz are Quasi-Peak, above are average value.
2. " * ", means this data is the worst emission level.
3. Emission Level = Reading Level + Antenna Factor + Cable loss
4. The average measurement was not performed when the peak measured data under the limit of average detection.

Band Edge Data

Date of Test	:	Dec.28, 2000	EUT	:	AV-LINK
Test Mode	:	Channel 3	Test Site	:	Open Site 2

Channel No.	Frequency (MHz)	Measurement Frequency (GHz)	Measurement level (dBc)	Required Limit (dBc)	Result
3	<2400	2.40000	24.74	>20	Pass

Figure:

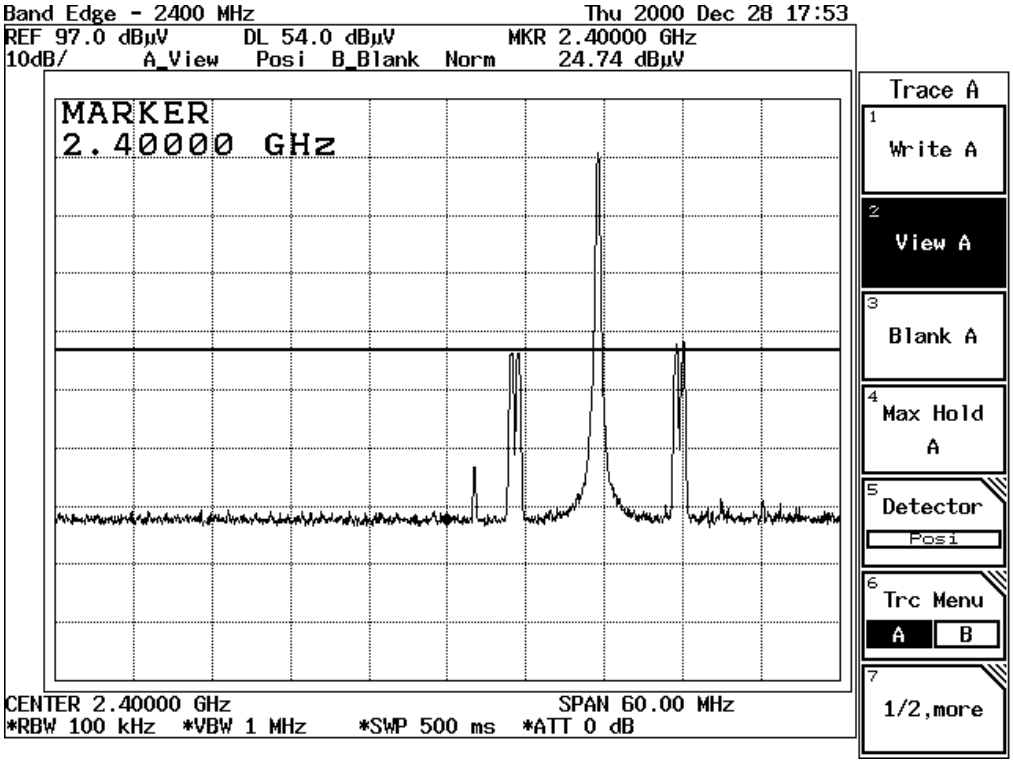

Band Edge Data

Date of Test	:	Dec.28, 2000	EUT	:	AV-LINK
Test Mode	:	Channel 1	Test Site	:	Open Site 2

Channel No.	Frequency (MHz)	Measurement Frequency (GHz)	Measurement level (dBc)	Required Limit (dBc)	Result
1	>2483.5	2.48352	24.91	>20	Pass
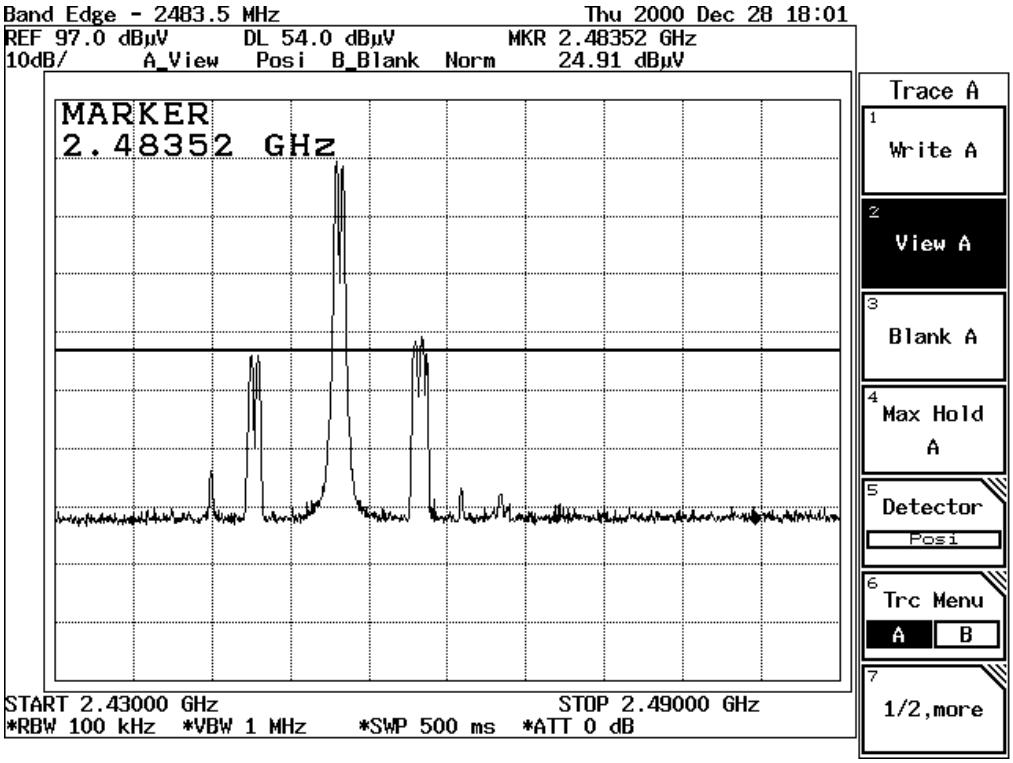
Figure: