Installation Instructions For
Low Profile Mortise Lock

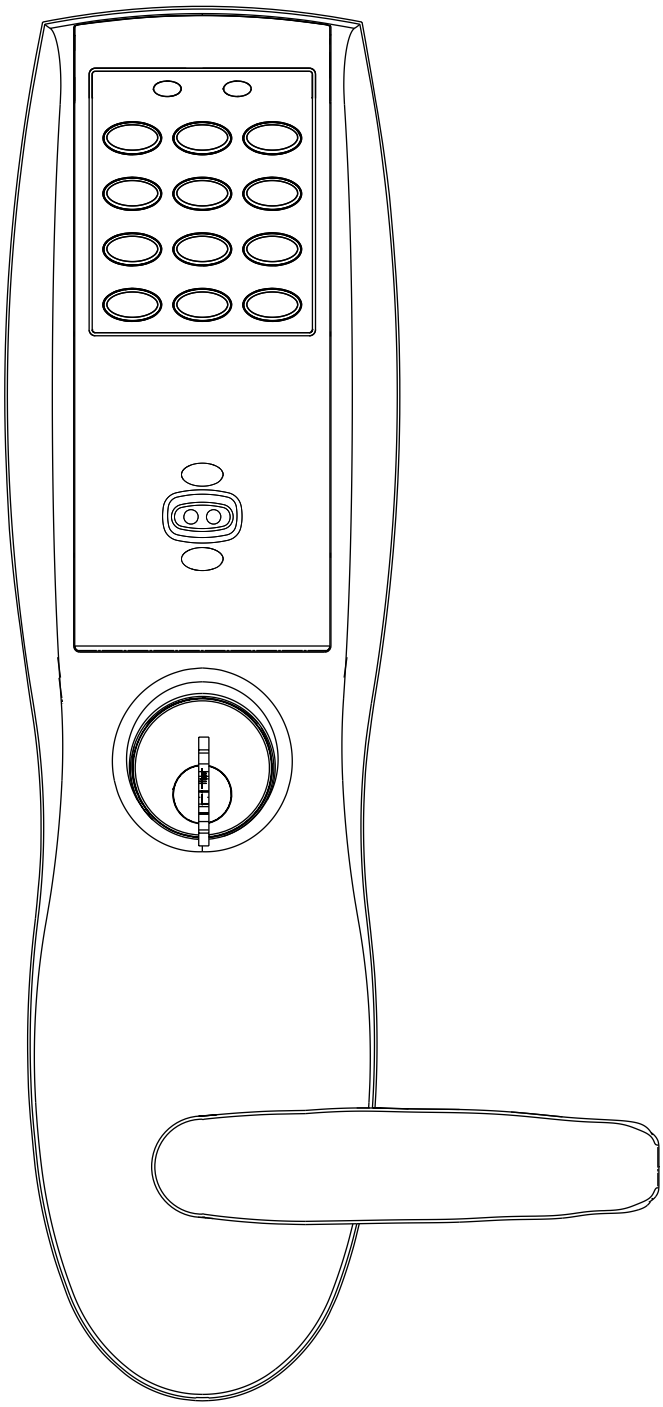

A7454A

SARGENT®

Table of Contents

Page

1 Warning 1

2 General Description 2

3 Specifications 2

4 Parts Breakdown.....3-5

5 Features 5

6 Installation Instructions.....6-13

7 Operational Check 14

8 Basic Programming Instructions 14

Keypad Only (100 Users–LK) 15

Keypad or Proximity/Keypad (500 Users–LU or PK). 18

Proximity Only (500 Users–PA) 22

9 Chain Programming 23

10 Transaction Log 24

1 Warning

Warning: Changes or modifications to this unit not expressly approved by the party responsible for compliance could void the user's authority to operate the equipment.

This device complies with Part 15 of the FCC Rules. Operation is subject to the following two conditions: (1) this device may not cause harmful interference, and (2) this device must accept any interference received, including interference that may cause undesired operation.

Note: This equipment has been tested and found to comply with the limits for a Class B digital device, pursuant to Part 15 of the FCC Rules. These limits are designed to provide reasonable protection against harmful interference in a residential installation. This equipment generates, uses and can radiate radio frequency energy and if not installed and used in accordance with the instructions, may cause harmful interference to radio communications. However, there is no guarantee that the interference will not occur in a particular installation. If this equipment does cause harmful interference to radio or television reception, which can be determined by turning the equipment off and on, the user is encouraged to try to correct the interference by one or more of the following measures:

- Reorient or relocate the receiving antenna.
- Increase the separation between the equipment and receiver.
- Connect the equipment into an outlet on a circuit different from that to which the receiver is connected.
- Consult the dealer or an experienced TV technician for help.

This Class B digital apparatus complies with Canadian ICES-003

Cet appareil numÈrique de la classe B est conforme ‡ la norme NMB-003 du Canada

2 General Description

The SARGENT Keypad Mortise Lock/Prox is designed for areas which require authorized entry. It is a self-contained microprocessor-controlled keypad with non volatile solid-state memory. The keypad will hold a total of 100(LK) / 500(LU, PK, PA) different User Codes. User Codes “01”, “02”, and “03” are utilized for Master Code, Emergency Code, and Supervisory Code, respectively.

This product is operated by six (6) “AA” Duracell Alkaline Batteries. SARGENT mortise locks are designed with high quality components to provide the high security, performance and durability.

Warning

To comply with “Fire Listed” doors, the batteries must be replaced with Alkaline batteries only.

3 Specifications

- Latchbolt - Stainless Steel
- Deadbolt - Stainless Steel
- Guardbolt - Stainless Steel, non handed
- Handed - Easily field reversible without disassembling the lock body
- Case - 12 gauge heavy duty wrought steel
- Outside lever controlled by Keypad, Keypad/Prox or Prox only
- Inside lever retracts latchbolt and deadbolt
- Locks furnished for 1 3/4" doors. Can be furnished for other door sizes upon request. Consult factory
- U.L. Listed (3 hr.)

4 Parts Breakdown

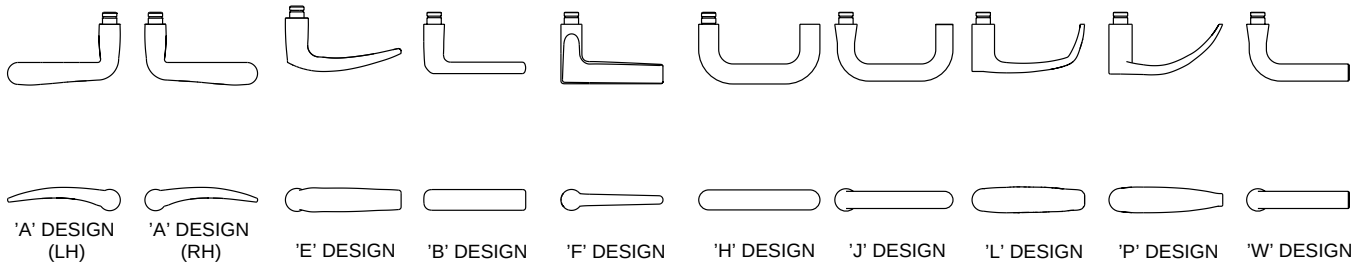

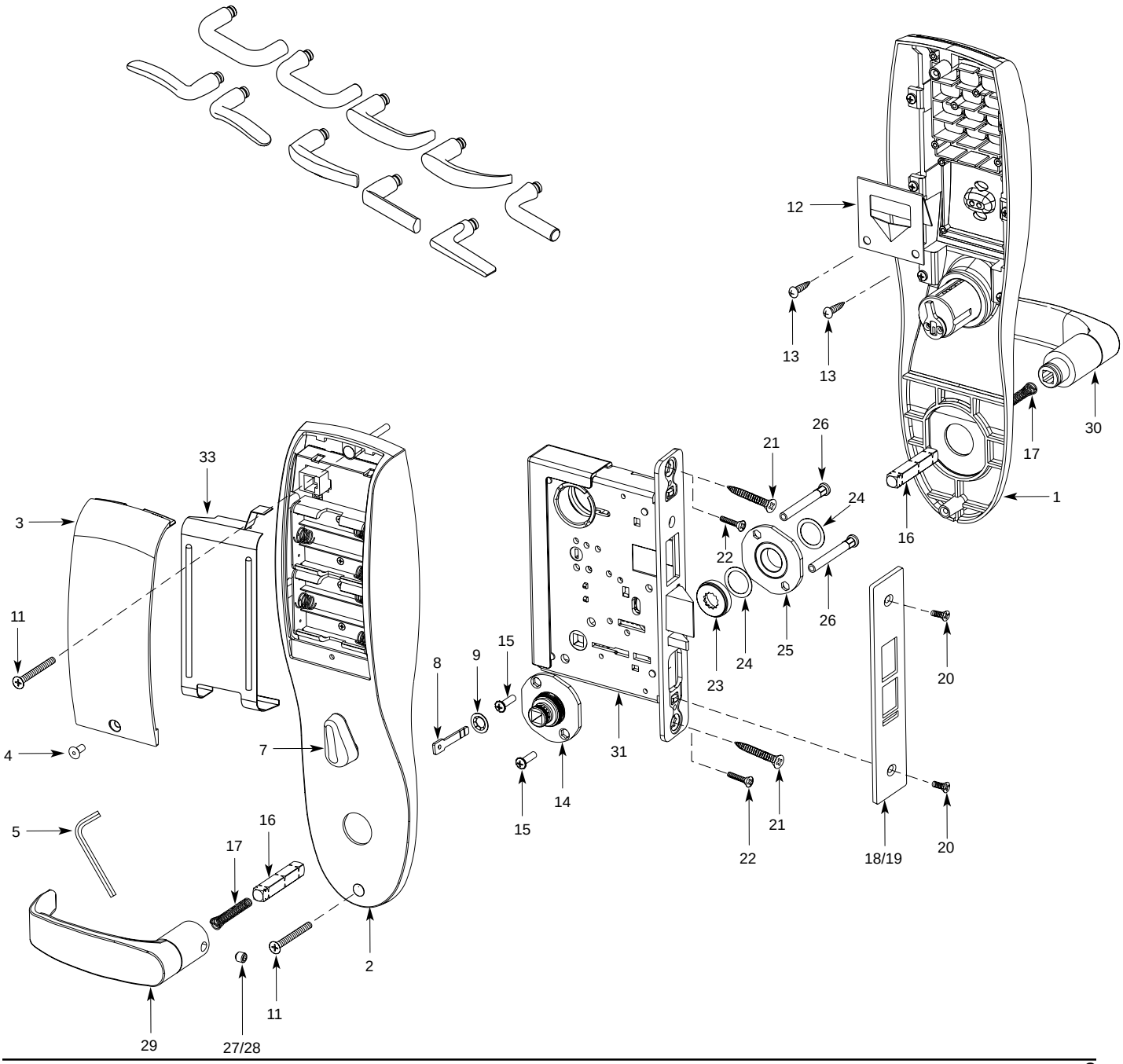

Parts Breakdown (Continued)

Item #	Part#	Description	# Required
1	82-3846	Outside Escutcheon with Cylinder Hole and Key Pad, or Key Pad / Prox	1
	82-3847	Outside Escutcheon without Cylinder Hole and Key Pad or Key Pad / Prox	1
	82-3848	Outside Escutcheon with Cylinder Hole and Prox Only	1
	82-3849	Outside Escutcheon without Cylinder Hole and Prox Only	1
	82-0493	Outside Escutcheon Housing Only with Cylinder Hole	1
	82-0495	Outside Escutcheon Housing Only without Cylinder Hole	1
		52-2431 Proximity Circuit Board and Harness Assembly	1
		52-2432 Key Pad / Proximity Circuit Board and Harness Assembly	1
2	82-3837	Inside Escutcheon with Thumb Turn and 100 User Controller	1
	82-3838	Inside Escutcheon without Thumb Turn and 100 User Controller	1
	82-3839	Inside Escutcheon with Thumb Turn and 500 User Controller	1
	82-3840	Inside Escutcheon without Thumb Turn and 500 User Controller	1
	82-3841	Inside Escutcheon with Thumb Turn Prox / Key Pad Controller	1
	82-3842	Inside Escutcheon without Thumb Turn Prox / Key Pad Cont.	1
	82-0492	Inside Escutcheon Housing Only without Thumb Turn	1
	82-0494	Inside Escutcheon Housing Only with Thumb Turn	1
		52-2440 100 (LK) User Key Pad Controller Assembly	1
		52-2447 500 (LU, PK) User Key Pad Controller Assembly	1
		52-2454 Key Pad / Proximity (PK), Proximity Only (PA) Controller Assembly	1
3	52-2437	Battery Cover Assembly	1
4	01-1212	Security Screw	1
5	01-0297	Security Tool	1
7	82-0507	Thumb Turn	1
8	77-0772	Spindle (Thumb Turn)	1
9	01-0844	Washer (Thumb Turn)	1
10	01-0543	Spring Grip Fastener (Thumb Turn)	1
11	77-0168	Thru Bolts #8-32 x 1 7/8” Flat Head Screw	2
12	52-0033	Fire Stop Plate	1
13	01-1500	Fire Stop Screws #8 x 1/2” Type “AB” Phillips Pan Head Self Tap	2
14	82-3088	Inside Spindle Adapter & Plate Assembly	1
15	01-1495	Screw #8-32 x 1/2”	2
16	82-0368	Inside Spindle / Outside Spindle	2
17	82-0347	Inside Spring / Outside Spring	2
18	82-0081	Face Plate no Dead Bolt	1
19	82-0084	Face Plate with Dead Bolt	1
20	01-1028	Face Plate Screws Machine 8-32 x 1/4”	2
21	01-2299	Lock Body Screws / Wood Door #12 x 1 1/4”	2
22	01-1019	Lock Body Screws / Metal Door 12-24 x 1/2”	2
23	82-0184	Cap Nut	1
24	01-0079	Washer	2
25	82-3082	Plate Assembly	1
26	81-0723	Post	2
27	01-1472	Lever Handle Screw, A, E & F Lever	1
28	01-1174	Lever Handle Screw, B, J, L, P & W Lever	1
29	81-0467	Inside Lever (L.H.) "A" Design	1
	81-0468	Inside Lever (R.H.) "A" Design	1
	81-0490	Inside Lever "B" Design	1
	81-0470	Inside Lever "E" Design	1
	81-0471	Inside Lever "F" Design	1
	81-0447	Inside Lever "J" Design	1
	81-0489	Inside Lever "L" Design	1
	81-0513	Inside Lever "P" Design	1
	81-0445	Inside Lever "W" Design	1

Parts Breakdown (Continued)

Item #	Part#	Description	# Required
30	82-0151	O/S Lever Handle R.H. "A" Design	1
	82-3074	O/S Lever Handle R.H. "A" Design Stainless Steel	1
	82-0152	O/S Lever Handle L.H. "A" Design	1
	82-3073	O/S Lever Handle L.H. "A" Design Stainless Steel	1
	82-0153	O/S Lever Handle "B" Design	1
	82-0154	O/S Lever Handle "E" Design	1
	82-3074	O/S Lever Handle "E" Design Stainless Steel	1
	82-0155	O/S Lever Handle "F" Design	1
	82-3076	O/S Lever Handle "F" Design Stainless Steel	1
	82-3079	O/S Lever Handle "H" Design	1
	82-0156	O/S Lever Handle "J" Design	1
	82-0157	O/S Lever Handle "L" Design	1
	82-0158	O/S Lever Handle "P" Design	1
	82-0159	O/S Lever Handle "W" Design	1
31	82-3732	Lockbody Assembly (with deadbolt) (8276 & 8277)	1
	82-3733	Lockbody Assembly (without deadbolt) (8278 & 8279)	1
32	01-0803	Battery Alkaline ("AA" cell)	6
33	52-0253	Battery Keeper	1

5 Features

- Non volatile memory
- Motor driven, battery operated mortise lock
- Battery operated with 6 each “AA” Alkaline
- Low battery alert–4 chirps after code entry
- External remote “request to exit” connector
- Supervisory code will unlock door when low battery had expired
- 100 (LK) or 500 (LU, PK, PA) users total
- Programming done at keypad or with Soflink™ Plus software and a PC (LU, PA, PK). Soflink™ Plus Software User Manual A7462
- Proximity FOB or Card optional
- Operates utilizing any two to six digits per code. Digits may be repeated and codes may start with zero
- Cylinder override optional
- Entry of three wrong User Codes disables all codes for ten seconds. Yellow LED on solid
- Piezo horn can be heard with each keystroke or turned off by Master or Supervisory Code
- Last 15 (LK) transactions can be output to portable printer via infrared link
- Last 1000 (LU, PK, PA) transactions can be output to portable printer via infrared link or PC via Soflink™ Plus software
- Deadbolt switch inside mortise lock allows Emergency Code and Master Code holders to gain entry when deadbolt is thrown

6 Installation Instructions

• Verify hand and bevel of door

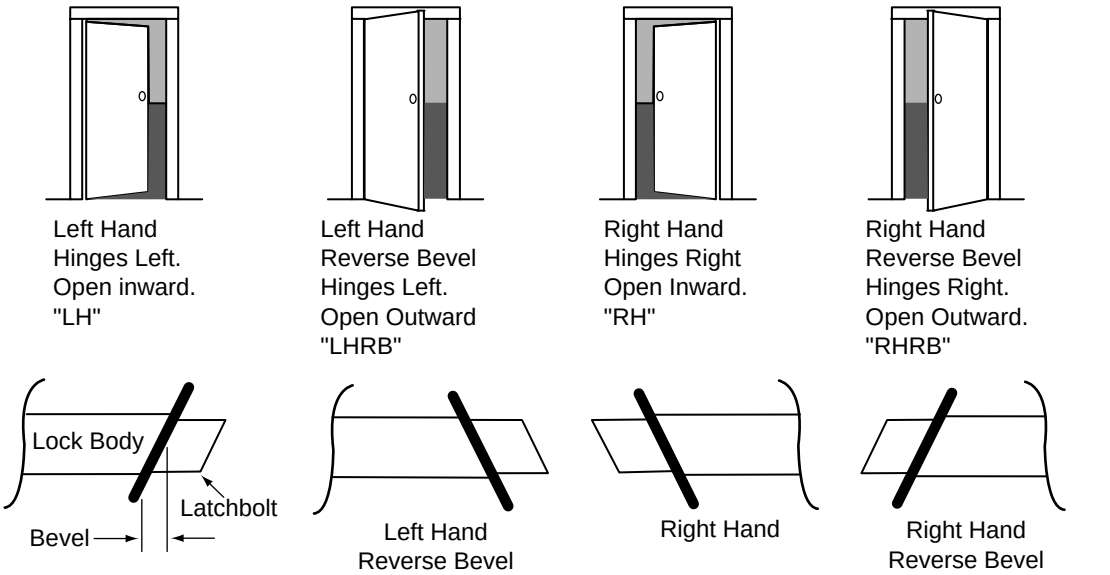

• View lock body from top and from the outside (as shown above)

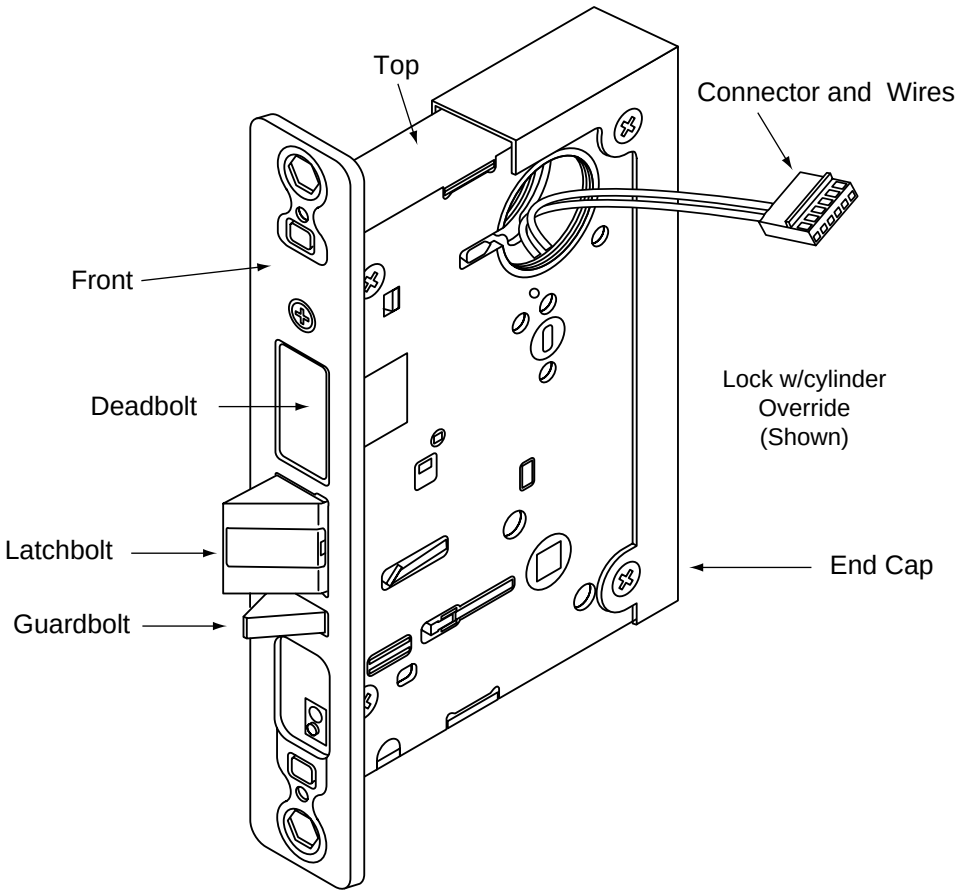

Installation Instructions (Continued)

Door Preparation

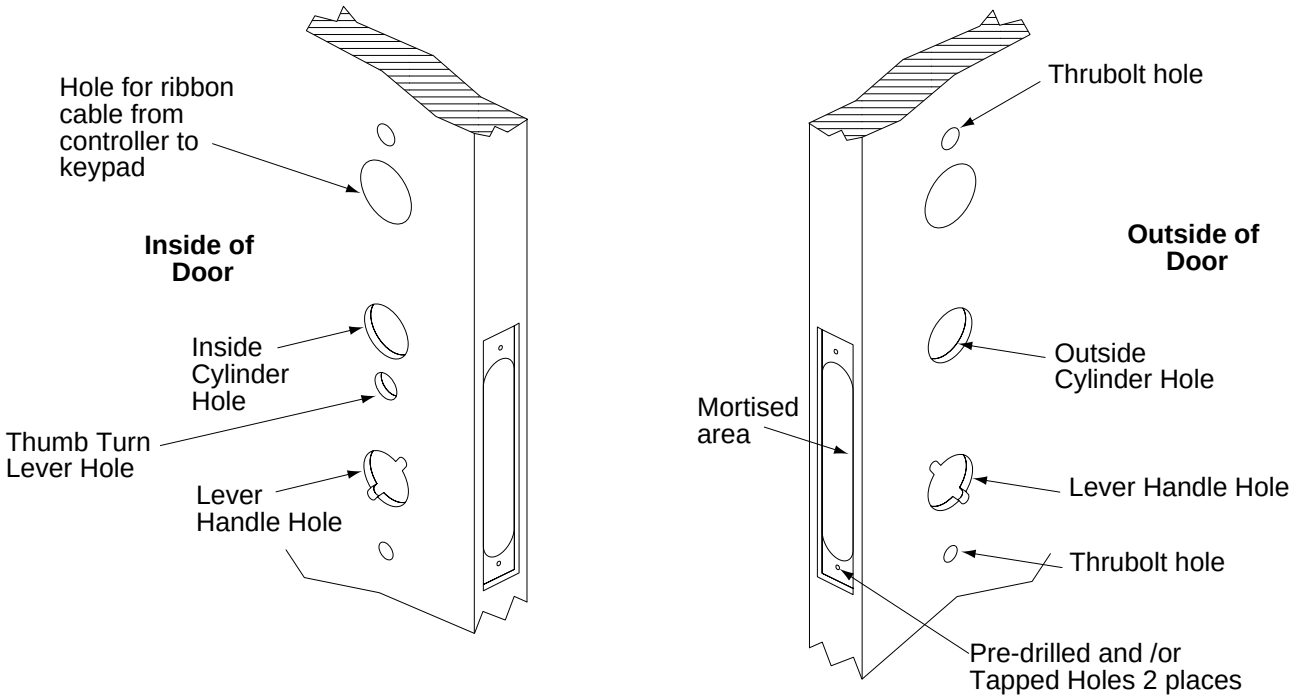

NOTE: Always consult the proper template prior to drilling any holes.

Installation Instructions (Continued)

How to Reverse Lock Hand

If it is necessary to change hand of locking piece:

1. Turn lockbody to side NOT marked with **RED** locking piece.
2. Insert blade of common screwdriver into locking piece slot.
3. Push locking piece toward front of lockbody and rotate until RED shows.
4. RED indicates locked (outside) side.
5. Wire harness **MUST** exit thru non-cylinder side.

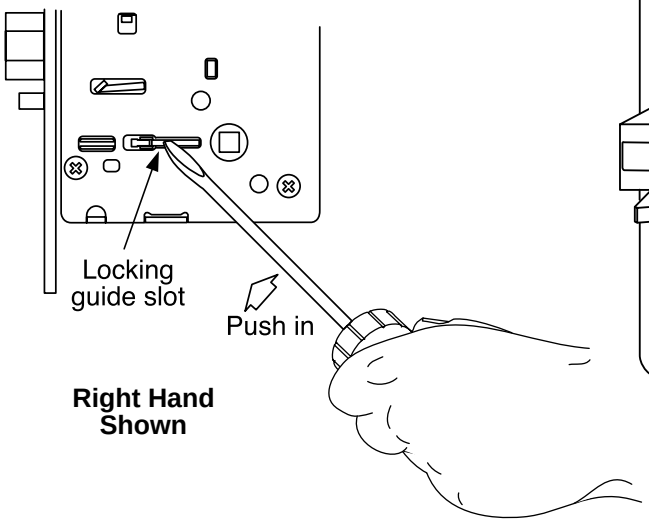

Right Hand Shown

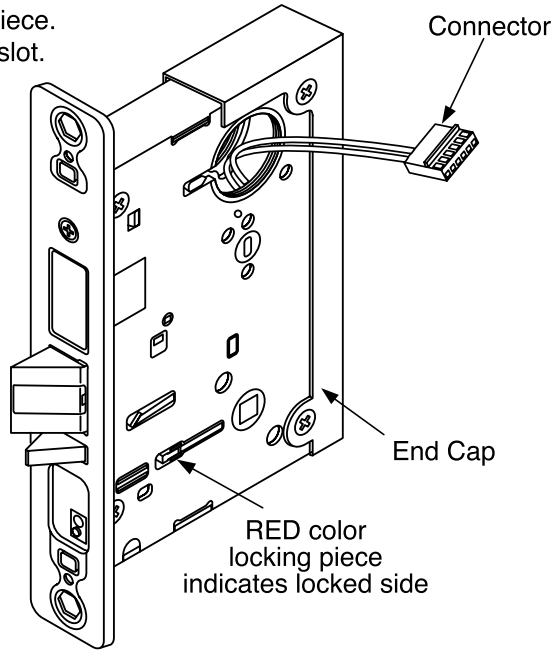

If it is necessary to change hand Latchbolt:

1. Insert blade of common screwdriver into oval slot behind latchbolt.
2. Push latchbolt out until back of bolt clears lockbody front.
3. Rotate latchbolt 180° until the latchbolt drops back into the lockbody.

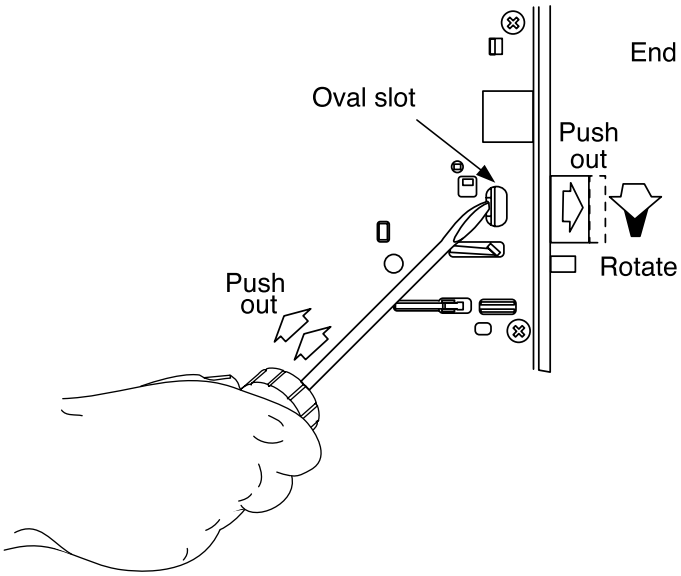

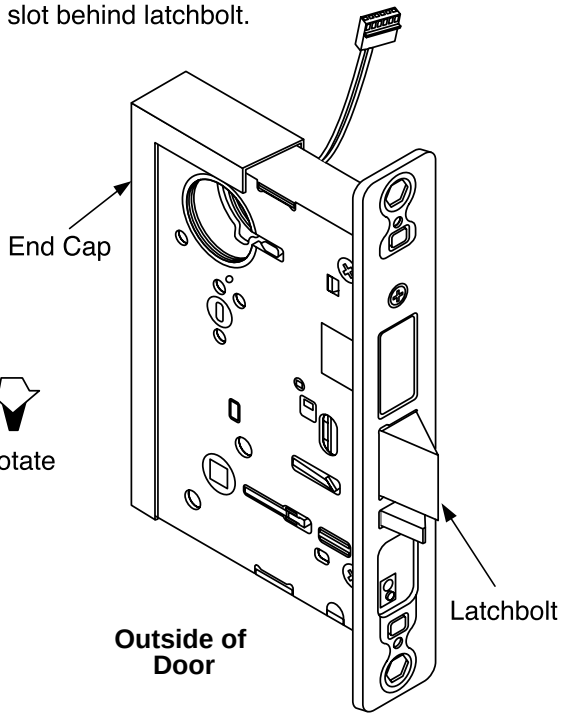

Outside of Door

Installation Instructions (Continued)

Step #1 Installation of Lockbody/Attaching Lockbody Screws

- Wires and Connector go into the mortised area and out of the inside cylinder hole

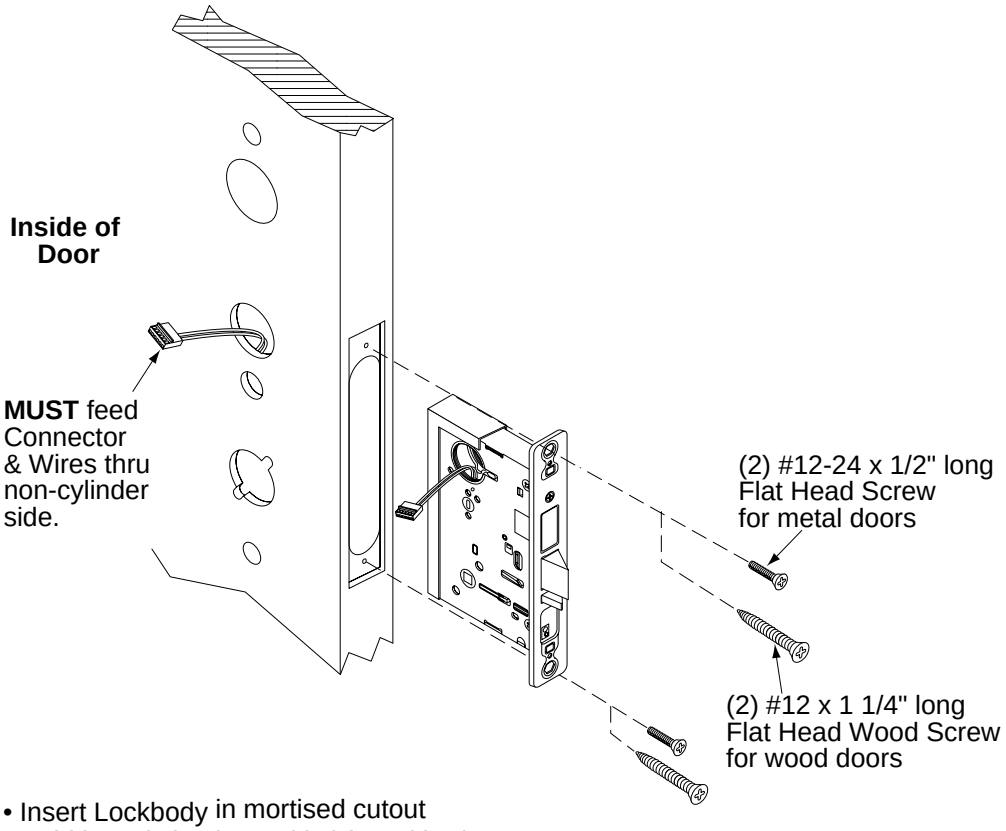

- Insert Lockbody in mortised cutout
- Hold loosely in place with (2) Lockbody screws
- **DO NOT TIGHTEN SCREWS AT THIS TIME**

Installation Instructions (Continued)

Step #2 Attaching of Fire Stop Plate

NOTE: Fire stop plate is required on all fire rated doors

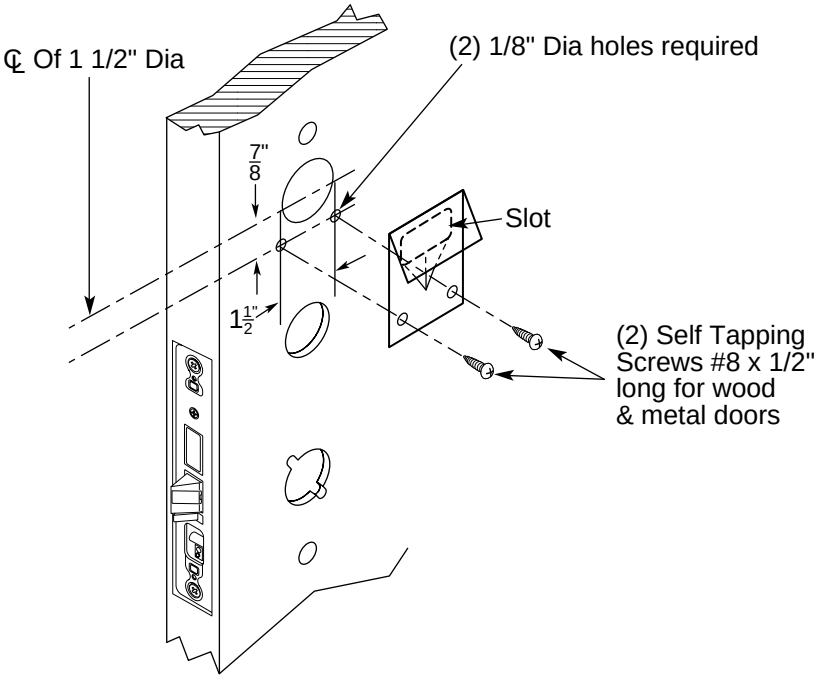

Outside of Door

Installation Instructions (Continued)

Step #3 Installation of Outside/Inside Escutcheon & Lever Assembly

To secure the adapter and plate assembly to the inside of the door, thread the screws mounting posts of the outside lever assembly.

Mortise lockbody connector and wire

Tighten retaining nut by hand. Back off retaining nut slightly until star pattern lines up with square lever assembly corners

Insert Spindle into square hole on inside of door.

From the outside of the door, feed wires and connector through fire stop plate

Keypad/prox connector and cable

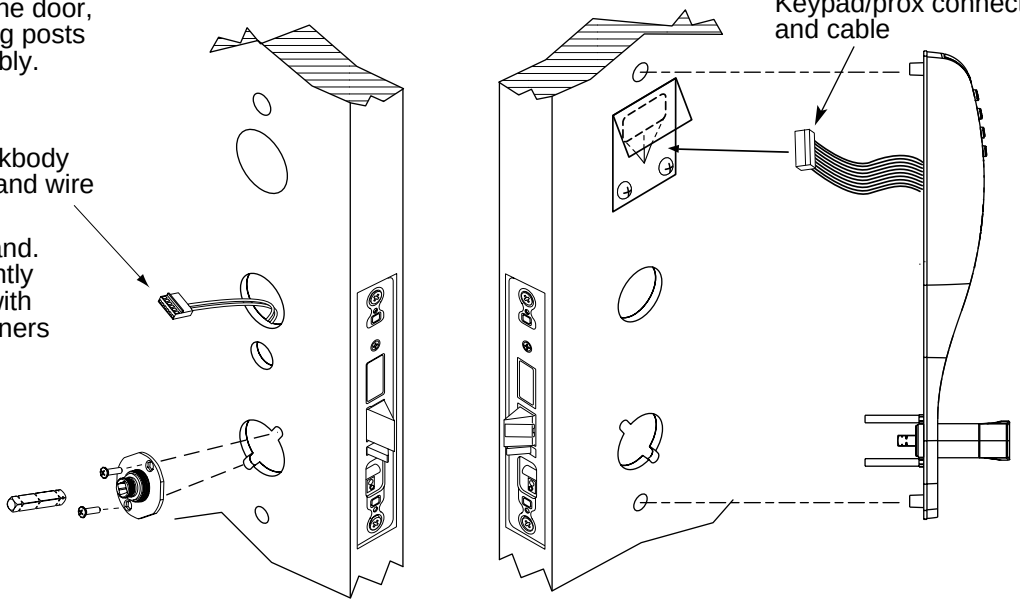

With outside lever horizontal, carefully insert the mounting posts through the door and lockbody. Make sure the spindle is properly engaged in the lock.

NOTE: For installation of optional gasket Part #82-0500 see Gasket Installation

Plug Keypad Connector into inside Escutcheon as shown. Place excessive wire in hole.

Plug smaller Connector as shown into the inside Escutcheon. Place excessive wire in inside escutcheon assembly. Keep excessive wires away from cylinder hole.

NOTE:
Both connectors go on only one way. Do not offset the connectors. Be sure connectors are seated completely. If not seated, Keypad will not function properly.

*8-32 Flat Head Screw

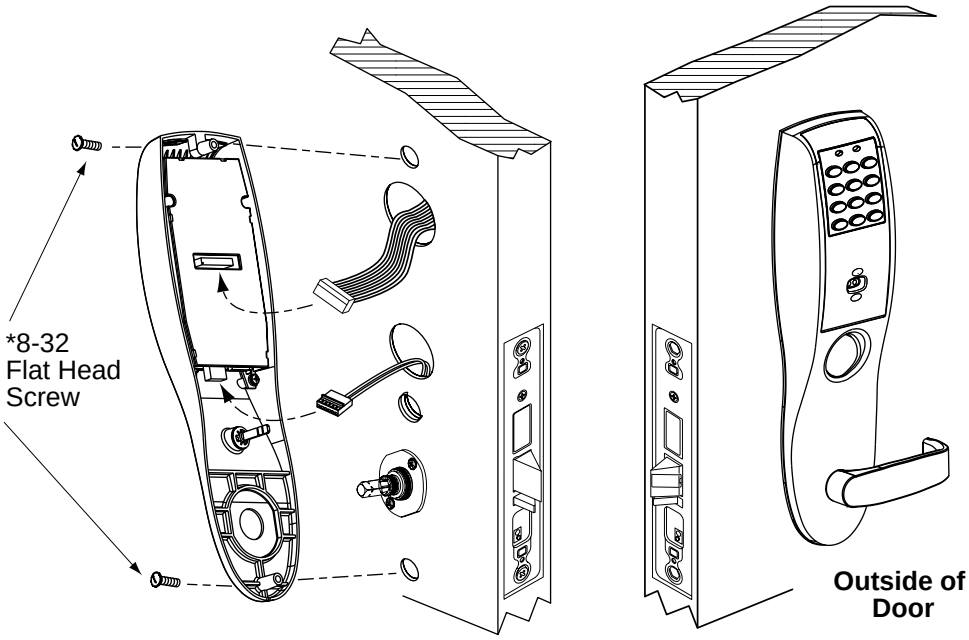

Locate (2) #8-32 Flat Head Screw and insert through the escutcheon into the outside escutcheon. Tighten firmly.

Installation Instructions (Continued)

Step #4 Installation of Inside Lever/Outside Cylinder

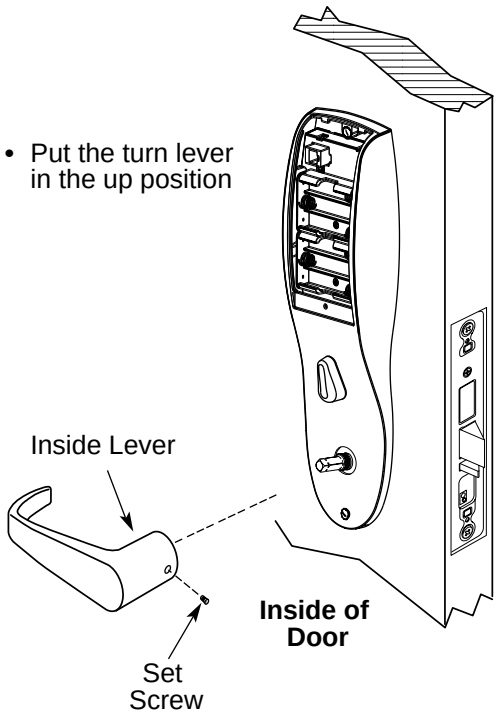

- Put the turn lever in the up position

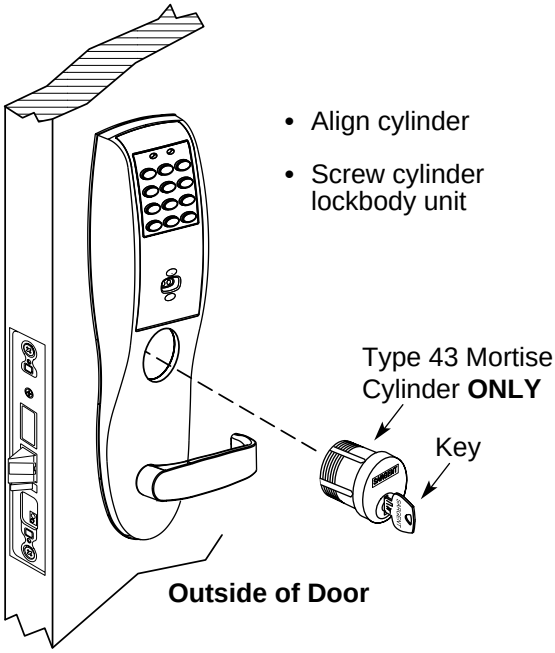

- Align cylinder
- Screw cylinder lockbody unit

- Slide lever handle onto spindle until fully seated. Be sure handle is horizontal and facing to the rear of door
- Tighten the set screw securely with 1/8" hex wrench

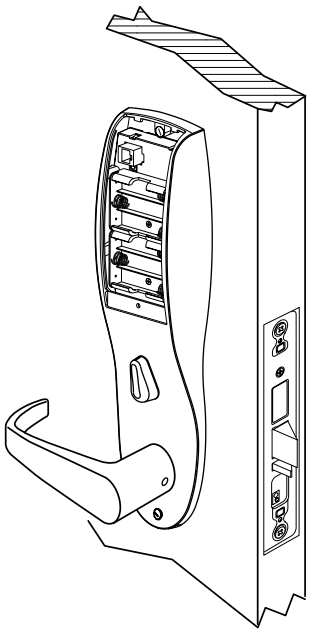

- Tighten the set screw to prevent unscrewing of the cylinder

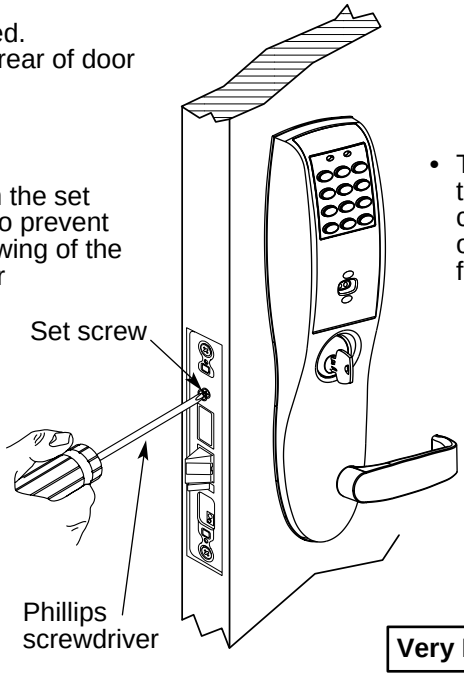

- Turn the key way in the cylinder to make certain that the locking or latching mechanism function correclly.

Very Important
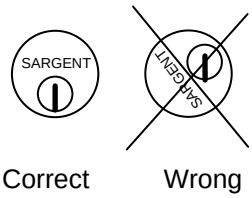
Note: Key and the cylinder must be rotated as shown