SARGENT®

Profile Series v.N1 Access Control Lock Operating Manual

For assistance, contact SARGENT at 800-810-WIRE (9473) or visit www.sargentlock.com.

An ASSA ABLOY Group company

ASSA ABLOY

Table Of Contents

TABLE OF CONTENTS 2
SECTION 1: INTRODUCTION 3
1.1 PRODUCT DESCRIPTION 3
1.2 PRODUCT FEATURES 3
1.3 SPECIFICATIONS 4
1.4 LED FUNCTIONS 5
SECTION 2: SYSTEM OPERATION 6
2.1 PRESENTING A PROXIMITY CARD / ENTERING A KEYPAD CODE 6
2.2 OPERATING THE SOLENOID 7
2.3 CONTROLLING THE REQUEST TO EXIT, DOOR POSITION SWITCH, DEADBOLT MONITOR AND LATCH BOLT MONITOR 7
SECTION 3: SYSTEM CONFIGURATION 8
3.1 SELECTING THE READER ADDRESS 8
3.2 CONFIGURING THE SOLENOID 9
3.3 ENABLING THE TAMPER SWITCH 9
3.4 CONFIGURING THE READER LED OPERATION 9
3.5 DIP-SWITCH SETTING CHART 10
SECTION 4: WIRING 11
4.1 READER CONNECTOR DIAGRAM 11
4.2 INTERFACE MODULE CONNECTOR DIAGRAM 12
4.3 AUXILIARY (AUX) RELAY BOARD CONNECTOR DIAGRAM 13
4.4 WIRING THE READER TO THE INTERFACE MODULE USING ONE POWER SUPPLY 14
4.5 WIRING THE READER TO THE INTERFACE MODULE USING MULTIPLE POWER SUPPLIES 15
4.6 WIRING A SOLENOID TO THE READER 16
4.7 CONNECTING THE AUX RELAY BOARD TO THE INTERFACE MODULE 17
4.8 WIRING A DOOR POSITION SWITCH (DPS), REQUEST TO EXIT (RX) SWITCH, LATCH BOLT (LX) AND DEADBOLT MONITOR (DX) SWITCH TO THE READER 18

Section 1: Introduction

1.1 Product Description

The Profile Series v.N1 Access Control Lock is designed to integrate into an existing Wiegand access control system.

The unit consists of three components: the Reader(s), the Interface Module and the Auxiliary Relay Board. The Reader resides within the exterior escutcheon on each door and connects to the prox antenna, the keypad and it wires back to the Interface Module. The Interface Module connects the v.N1 system to the access control system and it supports from one to four Readers.

The third component is the Auxiliary Relay Board. These relay outputs are controlled by the Latch Bolt and Deadbolt switches in lock bodies. Refer to section 4.8 for further details.

1.2 Product Features

- Supports 1 to 4 Doors
- Card Reader is 39-bit HID Compatible
- Keypad Data is Sent as 8-bit Burst
- RX (Request to Exit)
- Door Position Switch Monitor
- Deadbolt Monitor
- Latch Bolt Monitor
- Supports Fail-Safe and Fail-Secure Solenoid Locking Devices

NOTE:

> This device complies with Part 15 of the FCC Rules. Operation is subject to the following two conditions: (1) this device may not cause harmful interference, and (2) this device must accept any interference received, including interference that may cause undesired operation.
>
> Changes or modifications not expressly approved by the party responsible for compliance could void the user's authority to operate the equipment.

1.3 Specifications

Electrical Specifications	
Operating Voltage	12 to 30 VDC
Current Draw	Reader: 36mA (Typical); 46mA (Max) Interface Module: 59mA (Typical); 182mA (Max)* Aux Relay Board: 17mA (Typical); 386mA (Max)* *The max current draw on the Interface Module was calculated by adding 18mA for each relay energized. The max current draw on the Aux Relay Board was calculated by adding 21mA for each relay and LED.
Relay Contacts	12-24VAC/DC; 1A (max)
Cable Specifications	
RS-485 Cable (between Reader and Interface Module)	24 AWG, shielded two-twisted pair telephone cable with a shunt capacitance of 16pF/Ft. Maximum of 4000 Ft.
Power Supply Cable	18 AWG – 22 AWG (dependent on distance) stranded.
RX and Door Contact Cable	18 – 22 AWG (dependent on distance) stranded and shielded.
Lock Input Cable	18 – 22 AWG (depended on distance) stranded.
Wiegand Data Cable (Data 0 and Data 1	18 – 22 AWG (dependent on distance) stranded and shielded.
LED and Sounder Control Cable	18 – 22 AWG (dependent on distance) stranded and shielded.
Mechanical Specifications	
Interface Module Dimensions	4” x 6”
Aux Relay Board Dimensions	4” x 6”
Miscellaneous Specifications	
Operating Temperature	-35°C to +66°C (-31°F to + 151°F)
Compatible Proximity Cards	HID format cards up to 39 bits in length

1.4 LED Functions

The following chart describes the function of the LED's on the circuit boards.

Interface Module				
LED	**Color**	**Function**	**Normal Condition**	**Error Condition**
LED1	Yellow	Indicates a Reader is offline	Off	Solid
LED2	Red	Indicates communication errors between a Reader and Interface Module	Off	Flashing Rapidly
LED3	Green	Indicates successful communication between the Readers and the Interface Module	Flashing Rapidly	Off
LED4	Green	Indicates the 9V regulator on the PCB is functioning	On	Off
LED5	Green	Indicates the 5V regulator on the PCB is functioning	On	Off
LED6	Green	Indicates the tamper relay is energized	On	Off
Reader				
LED	**Color**	**Function**	**Normal Condition**	**Error Condition**
LED5	Red	Indicates valid proximity card read.	Flash on valid proximity card read	N/A
LED6	Green	Indicates valid proximity card read.	Flash on valid proximity card read	N/A
Auxiliary Relay Board				
LED	**Color**	**Function**	**Normal Condition**	**Error Condition**
LED1-16	Green	Indicates the Aux Relay is Energized	On = Relay energized Off = Relay de-energized	N/A

Section 2: System Operation

The following section discusses the overall operation of the Profile Series v.N1 Access Control Lock. Section 3 covers how to configure the system to fit your application.

2.1 Presenting a Proximity Card / Entering a Keypad Code

As mentioned above, the Reader is the device used at the door to gain access. Depending on the system, the user has the option to enter either keypad data, present a proximity card or both. The Reader then transmits the keypad and/or card data back to the Interface Module over the RS-485 wires. The data is processed by the Interface Module and transmitted to the access control panel. The access control system then makes the decision whether or not to allow access. If a prox card was presented to the Reader, the Interface Module transmits the wiegand data directly to the panel. The Reader can read HID format cards up to 39 bits in length. If a code is entered on the keypad, the Interface Module sends each keypress individually to the access control panel in an 8-bit burst. The chart below shows the data for each keypress.

Key	Binary Data	Hex Data
1	11100001	E1
2	11010010	D2
3	11000011	C3
4	10110100	B4
5	10100101	A5
6	10010110	96
7	10000111	87
8	01111000	78
9	01101001	69
0	11110000	F0
*	01011010	5A
#	01001011	4B

The keypad and card data is transmitted from the Data 0 and Data 1 terminals on the Interface Module.

2.2 Operating the Solenoid

The Reader operates a solenoid locking device. Once the access control system validates the users keypad or card data, the door can now be unlocked. Shorting the two lock terminals on the Interface Module together activates the locking device. Connect these terminals to a normally open dry contact on the access control panel used to control the door. When the short is removed the locking device returns to the locked condition. The solenoid configuration is discussed in section 3.2.

2.3 Controlling the Request to Exit, Door Position Switch, Deadbolt Monitor and Latch Bolt Monitor

The Reader is equipped with a Request to Exit (RX) input, a Door Position Switch (DPS) input, a Deadbolt (DX) Monitor and a Latch Bolt (LX) Monitor. These are located on connector J3. On this connector there is a Loop Common connection (pin 1). To operate these inputs just short the desired input to the Loop Common wire. When the RX or DSP inputs are closed, the corresponding relay on the Interface Module is energized. When the LX input is closed the Aux 1 relay on the Aux Relay Board is energized and when the DX is closed the Aux 2 relay is energized. See section 4.8 for further details.

Section 3: System Configuration

This section explains how to configure your Profile Series vN.1 Access Control Lock system. Each sub-section describes the various configuration options. At the end section 3 there is a chart that shows all the dip-switch settings for quick reference.

3.1 Selecting the Reader Address

One Interface Module can support from one to four Readers. You must assign each Reader an address before you connect it to the Interface Module. Each Reader must have a different address assigned to it. This enables the Interface Module to distinguish each Reader from one another. The Reader address is selected by configuring dip-switches 1 and 2 on switch SW2 on the rear of the Reader board. The chart below shows these switch settings.

Reader Address	Switch 1	Switch 2
Reader #1	Open	Open
Reader #2	Closed	Open
Reader #3	Open	Closed
Reader #4	Closed	Closed

Once you've assigned the Reader addresses you now must configure the Interface Module to communicate with them. This is done by selecting which Readers are connected using dip-switches 1 through 4 on switch S2 on the Interface Module. To select a Reader close the corresponding switch and if a Reader is not connected leave the switch open. The chart below shows these switch settings.

Switch	Function	Open	Closed
1	Reader 1 Select	Reader 1 Not Connected	Reader 1 Connected
2	Reader 2 Select	Reader 2 Not Connected	Reader 2 Connected
3	Reader 3 Select	Reader 3 Not Connected	Reader 3 Connected
4	Reader 4 Select	Reader 4 Not Connected	Reader 4 Connected

3.2 Configuring the Solenoid

The solenoid can operate in either fail-safe or fail-secure mode. Fail-safe means the solenoid is energized in the locked position and is then de-energized when unlocked. This also means when power is lost the solenoid is de-energized and the door is unlocked. Fail-secure is the opposite, meaning the solenoid is de-energized in the locked position and is then energized when unlocked. When power is lost the solenoid remains de-energized and the door is locked. This is selected with dip-switch 5 on switch S1 on the Reader. When this switch is open the unit is in fail-safe mode and when the switch is closed it's in fail-secure mode. Refer to the table in section 3.6 for the dip switch setting.

3.3 Enabling the Tamper Switch

Each Reader has a magnetic Hall Effect switch, which is used as a tamper switch. To enable the tamper switch close dip-switch 7 on switch S1 on the Reader. Each interior escutcheon is equipped with a magnet. When the magnet is in place, the tamper relay on the Interface Module is energized and LED6 is on. This is the normal condition, indicating the door is secure. When the magnet is removed the tamper relay de-energizes and LED6 turns off. This indicates the unit was tampered with.

When more than one Reader, with the tamper switch enabled, is connected, the magnets must be in place on each Reader for it to operate properly. When a magnet is removed from any one of the Readers, the tamper relay de-energizes.

There is an additional tamper option, which is used to indicate if a door goes offline (due to a malfunction or was disconnected from the Interface Module). To enable this option close dip-switch 4 on switch S1 on the Interface Module. Now, if a Reader goes offline, the tamper relay de-energizes. Please note that the tamper switch does not need to be enabled on the Reader for this feature to work.

3.4 Configuring the Reader LED Operation

The Reader has a red/green bi-color LED on the on the front of the keypad. The red LED operation is controlled by dip-switch 6 on switch S1 on the Reader. When this switch is open the red LED is off. If you close dip-switch 6, the red LED turns on.

You can use the bi-color LED to indicate the status of your control panel by changing the LED to green when the door is unlocked. The LED control terminal on the Interface Module is used to control the status of the LED on the Reader. Dip-switch 3 on S1 on the Interface Module selects how the LED control terminal operates. When this switch is open the LED turns green when the terminal is pulled low (ground). When this switch is closed the LED turns green when the terminal is pulled high (positive voltage).

3.5 Dip-Switch Setting Chart

The charts below show all the dip-switch settings on the Interface Module and the Reader. If a switch is not used, leave it open.

Reader Switch S1			
Dip-Switch	**Function**	**Open**	**Closed**
1	Not Used	N/A	N/A
2	Not Used	N/A	N/A
3	Not Used	N/A	N/A
4	Solenoid Select	N/A	Solenoid
5	Fail Safe/Fail Secure Select	Fail Safe	Fail Secure
6	Red LED Select	Red LED Off	Red LED On
7	Tamper Input Select	Tamper Disabled	Tamper Enabled
8	Not Used	N/A	N/A
Reader Switch SW2			
Dip-Switch	**Function**	**Open**	**Closed**
1	Reader Address Select	See section 3.1	
2	Reader Address Select	See section 3.1	
3	Not Used	N/A	N/A
4	Not Used	N/A	N/A
Interface Module Switch S1			
Dip-Switch	**Function**	**Open**	**Closed**
1	Not Used	N/A	N/A
2	Not Used	N/A	N/A
3	Green LED Operation	Pull Led control terminal low to operate	Pull Led control terminal high to operate
4	Tamper Operation	Tamper only activates when magnet removed	Tamper activates if any door goes offline
Interface Module Switch S2			
Dip-Switch	**Function**	**Open**	**Closed**
1	Reader 1 Select	Reader 1 Not Connected	Reader 1 Connected
2	Reader 2 Select	Reader 2 Not Connected	Reader 2 Connected
3	Reader 3 Select	Reader 3 Not Connected	Reader 3 Connected
4	Reader 4 Select	Reader 4 Not Connected	Reader 4 Connected
5	Not Used	N/A	N/A
6	Not Used	N/A	N/A
7	Not Used	N/A	N/A
8	Not Used	N/A	N/A

Section 4: Wiring

The following section contains diagrams and descriptions detailing how to wire the Profile Series v.N1 Access Control Lock.

4.1 Reader Connector Diagram

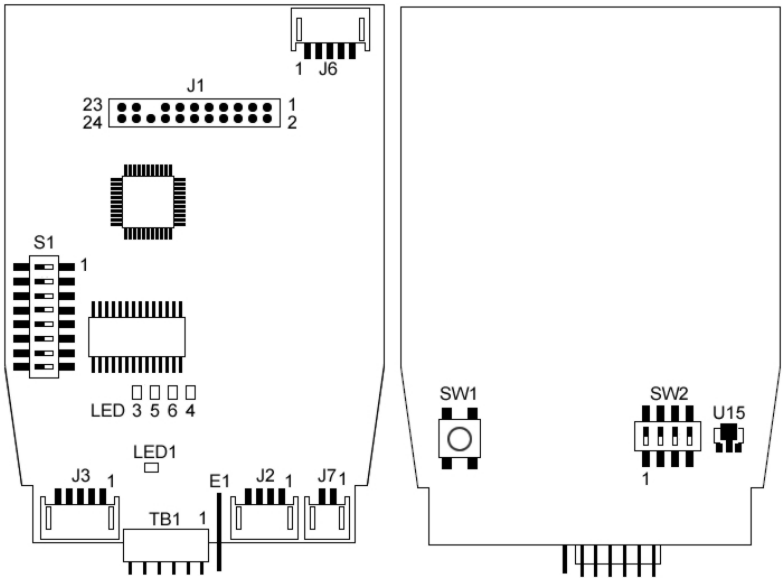

Connector J1	
Keypad Ribbon Cable Connector	
Connector J2	
Position	**Connection**
1	RS-485 Data B
2	RS-485 Data A
3	Reader +12-30VDC
4	Reader Ground
Connector J3	
Position	**Connection**
1	Loop Common
2	RX Input
3	Door Switch Monitor
4	Latch Bolt Input
5	Deadbolt Input
Connector J6	
Not Used	

Connector J7	
Position	**Connection**
1	Solenoid Positive
2	Solenoid Negative
Connector TB1	
Not Used	
Connector E1	
Earth Ground Connection	

4.2 Interface Module Connector Diagram

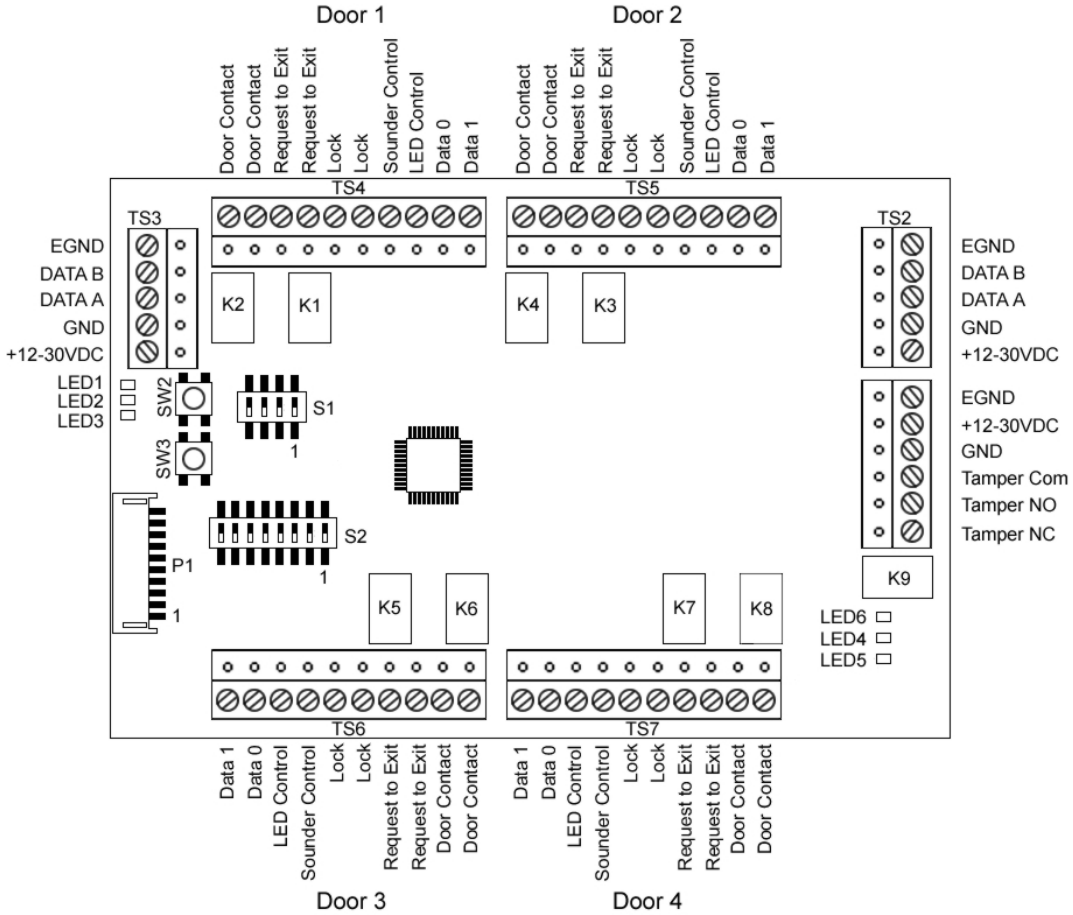

Terminal Strip TS1	
Position	**Connection**
1	Power Supply Earth Ground
2	Power Supply +12-30 VDC
3	Power Supply Ground
4	Tamper Relay Common
5	Tamper Relay Normally Open
6	Tamper Relay Normally Closed
Terminal Strips TS2 and TS3	
Position	**Connection**
1	Reader +12-30 VDC
2	Reader Ground
3	RS-485 Data A
4	RS-485 Data B
5	Reader Earth Ground

Terminal Strips TS4, TS5, TS6 and TS7	
Position	**Connection**
1	Door Switch Normally Open
2	Door Switch Common
3	Request to Exit Normally Open
4	Request to Exit Common
5	Lock Input
6	Lock Input
7	Sounder Control
8	LED Control
9	Data 0
10	Data 1

4.3 Auxiliary (Aux) Relay Board Connector Diagram

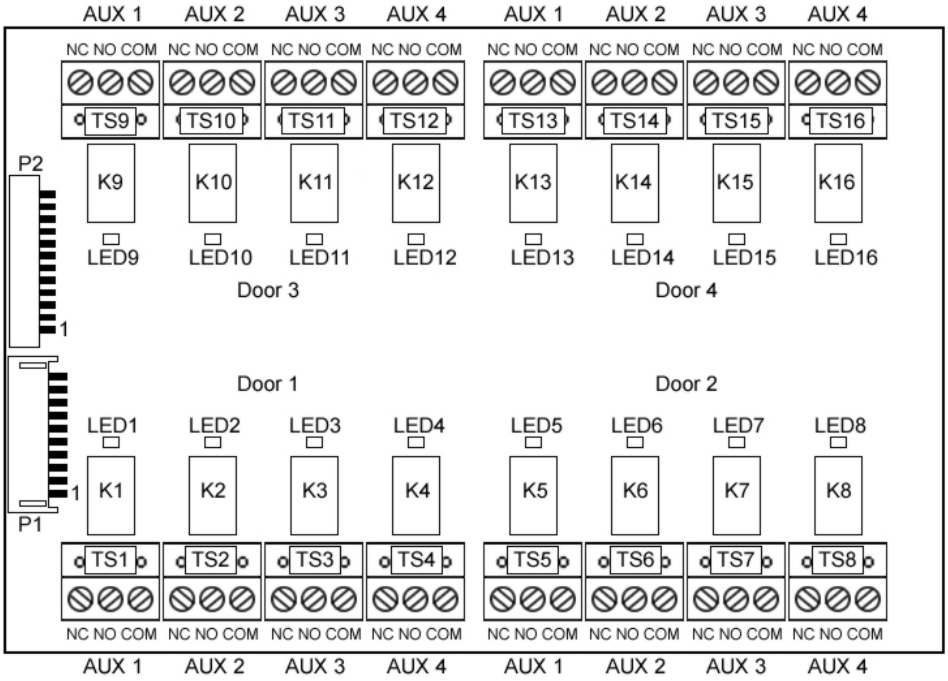

Terminal Strips 1 through16	
TS1-4	Reader 1 Aux Outputs
TS5-8	Reader 2 Aux Outputs
TS9-12	Reader 3 Aux Outputs
TS13-16	Reader 4 Aux Outputs
Terminal Strip Connections	
NC	Relay Normally Closed
NO	Relay Normally Open
COM	Relay Common
Connector P1	
Interface Module Connector	
Connector P2	
Not Used	

4.4 Wiring the Reader to the Interface Module Using One Power Supply

The Diagram below shows how to wire the Reader to the Interface Module using a single power supply. If you are connecting multiple Readers (up to 4), wire them in parallel using terminal strips TS2 and TS3, following the diagram below. The chart also shows these connections. Connect the power supply to TS1 as shown.

Note: The earth ground tab E1 on each Reader must be connected to the mounting screw in the rear housing as shown in the diagram.

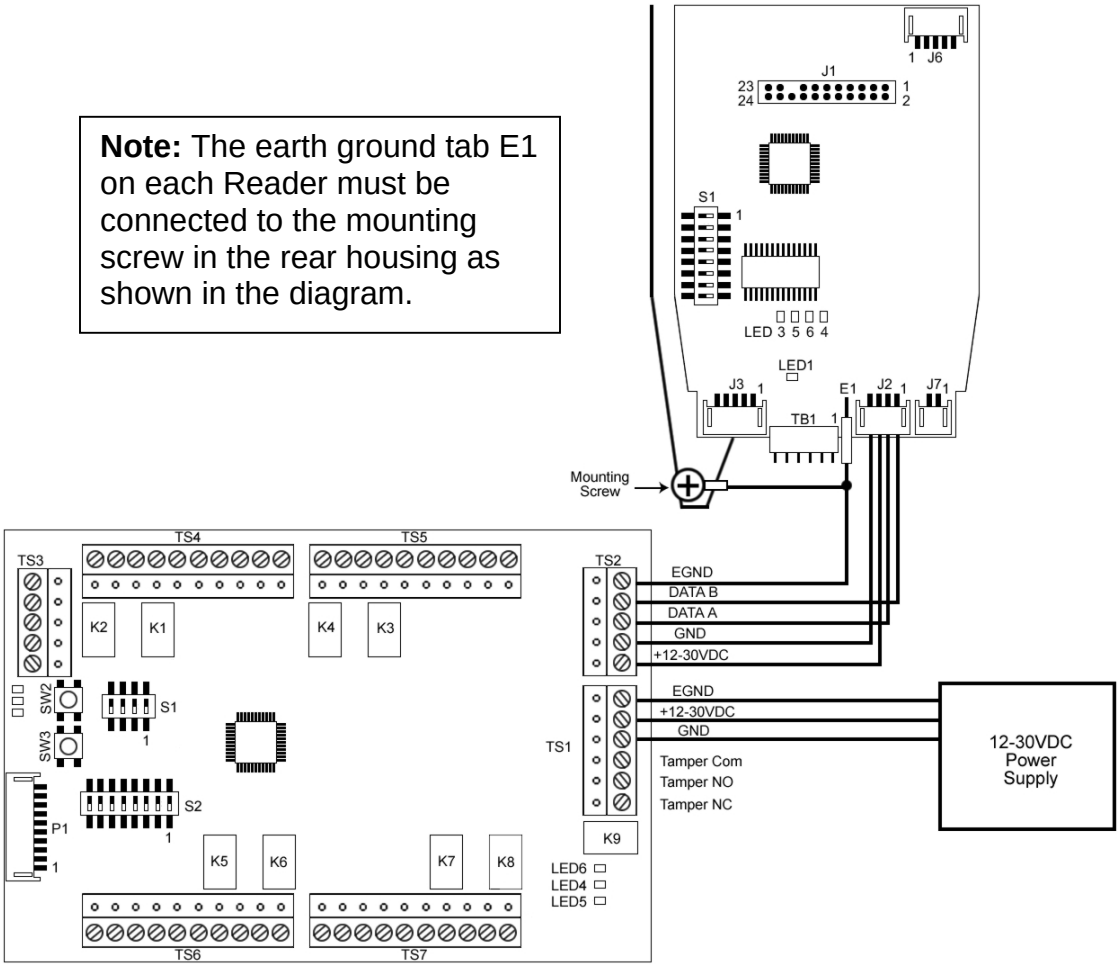

Reader	Interface Module
J2: Pin 1	TS2/TS3: Data B
J2: Pin 2	TS2/TS3: Data A
J2: Pin 3	TS2/TS3: +12-30VDC
J2: Pin 4	TS2/TS3: GND
E1 Earth Ground Tab	TS2/TS3: EGND

4.5 Wiring the Reader to the Interface Module Using Multiple Power Supplies

The Diagram below shows how to wire the Reader to the Interface Module using more than one power supply. When you are using multiple power supplies do not connect the Reader +12-30VDC (J2, pin 3) or earth ground (E1) to the Interface Module. Wire the Reader +12-30VDC and earth ground connections to the additional power supply. The Reader ground wires must be connected to the additional power supply <u>and</u> the Interface Module ground, however. You can use an additional power supply for each Reader you have connected by following the diagram below.

Note: The earth ground tab E1 on each Reader must be connected to the mounting screw in the rear housing as shown in the diagram.

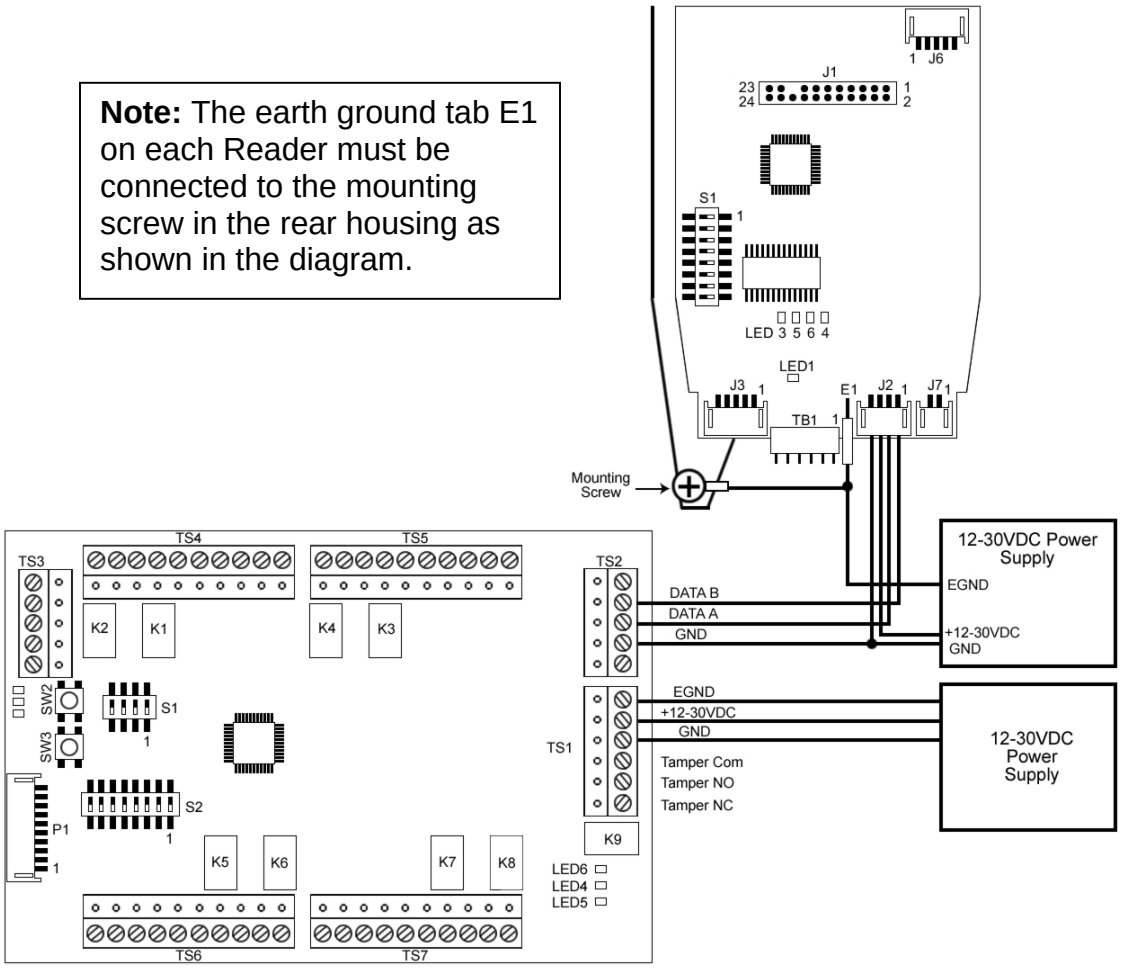

Reader	Interface Module
J2: Pin 1	TS2/TS3: Data B
J2: Pin 2	TS2/TS3: Data A
J2: Pin 3	Not Connected
J2: Pin 4	TS2/TS3: GND
E1 Earth Ground Tab	TS2/TS3: EGND

4.6 Wiring a solenoid to the Reader

The diagram below shows how to connect a solenoid to the Reader. The solenoid is connected to connector J7 as shown.

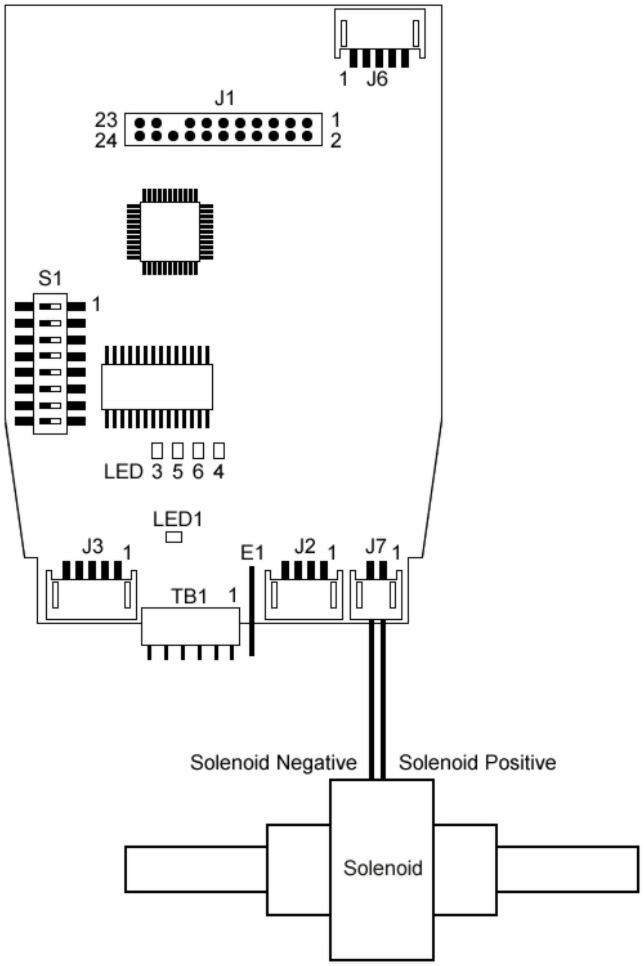

Reader Connector J7	Solenoid Connection
Pin 1	Solenoid Positive
Pin 2	Solenoid Negative

4.7 Connecting the Aux Relay Board to the Interface Module

The Aux Relay Board is connected to the Interface Module with a 10-position wire harness. This wire harness is plugged into P1 on both boards, as shown in the diagram below.

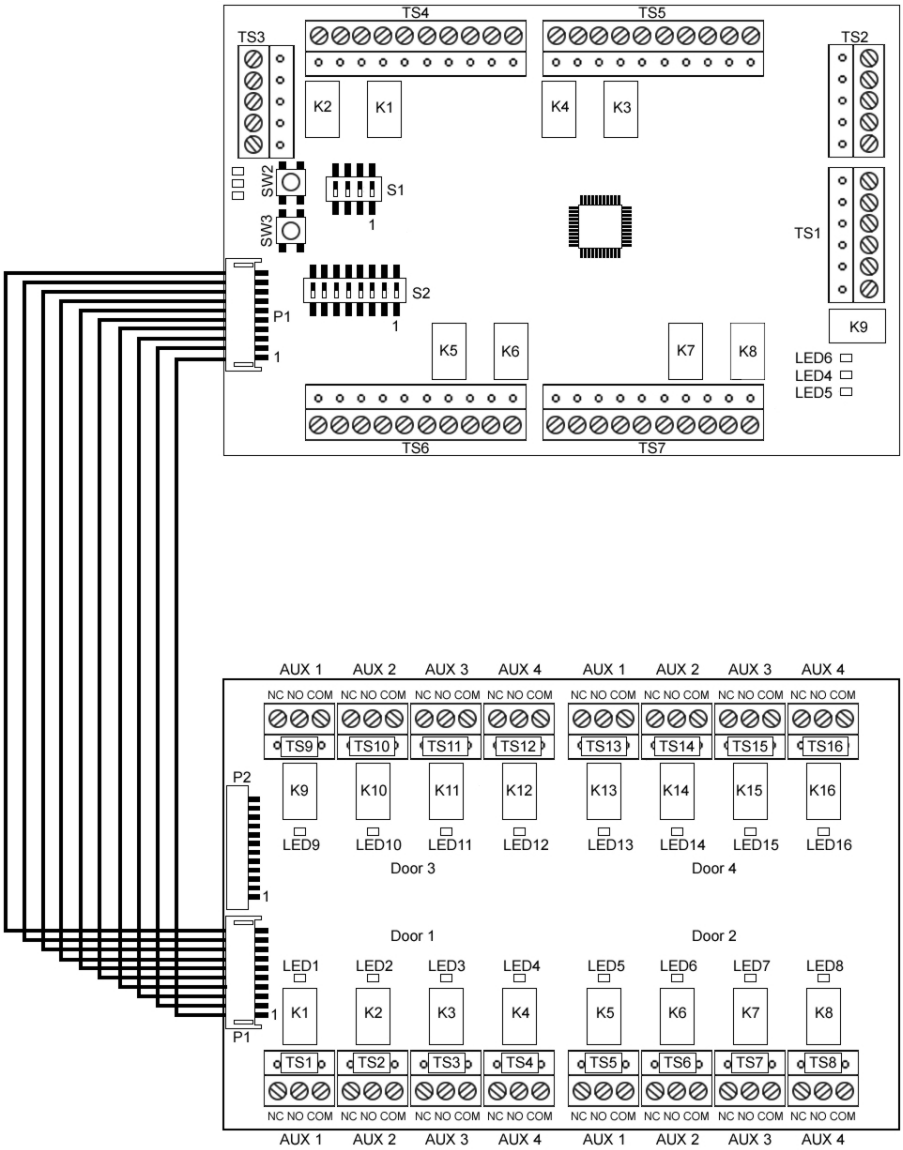

4.8 Wiring a Door Position Switch (DPS), Request to Exit (RX) switch, Latch Bolt (LX) and Deadbolt Monitor (DX) switch to the Reader

The diagram below shows how to connect a normally open Request to Exit device and a normally closed latch held closed door position switch. When the RX device is closed, the RX relay on the Interface Module energizes. When the door position switch is opened, the door contact relay on the Interface Module de-energizes.

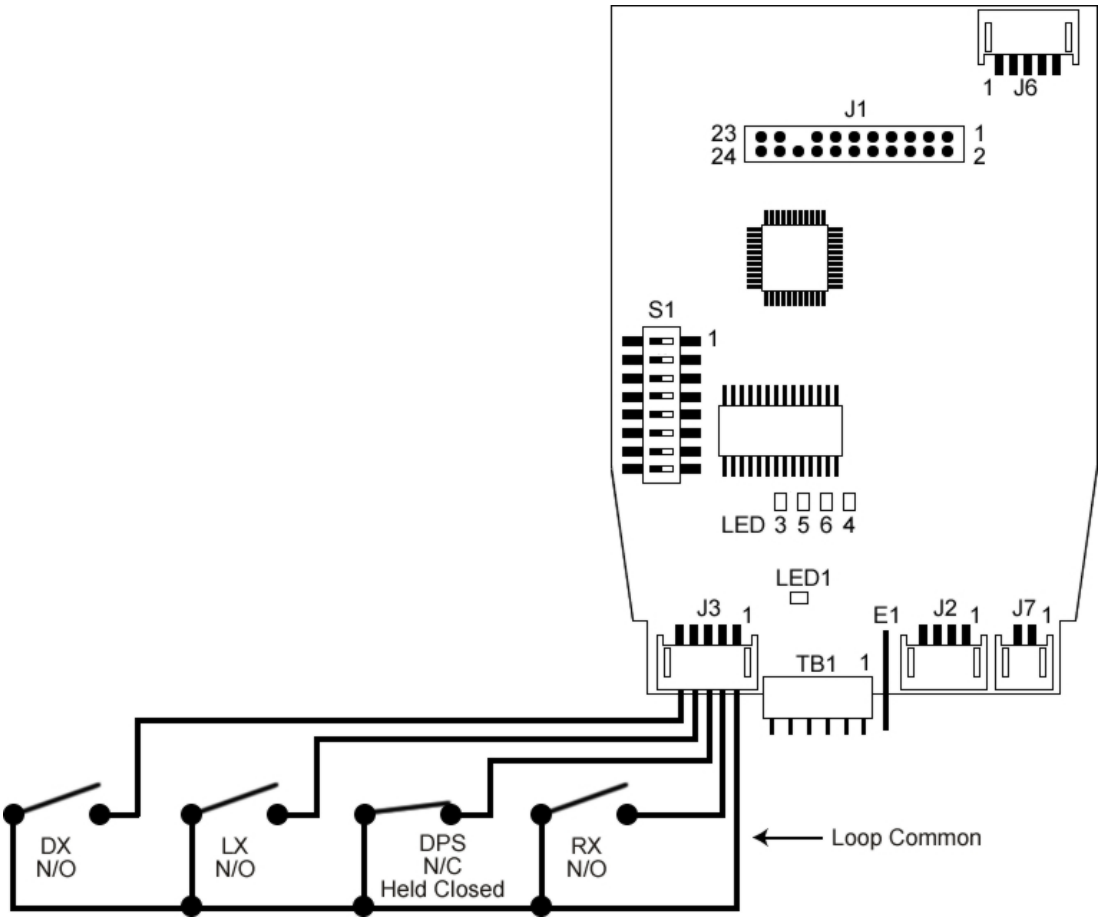

Reader J3	Connection
Pin 1	Loop Common
Pin 2	RX/Normally Open
Pin 3	Door Switch/Normally Closed/Held Closed
Pin 4	Latch Bolt/Normally Open
Pin 5	Deadbolt/Normally Open

Page left blank intentionally

SARGENT Manufacturing Company • 100 Sargent Drive • P.O. Box 9725 • New Haven • CT 06536-0915
Phone: 800-727-5477 • Fax: 888-863-5054 • Web site: www.sargentlock.com
SARGENT of Canada • Phone: 905-940-2040 • Fax: 905-940-3242 • Web site: www.sargentcanada.ca

Founded in 1864, SARGENT® is a market leader in locks, cylinders, door closers, exit devices, electro-mechanical products and access control systems for new construction, renovation and replacement applications. The company's customer base includes commercial construction, institutional and industrial markets.

The ASSA ABLOY Group is the world's leading manufacturer and supplier of locking solutions, dedicated to satisfying end-user needs for security, safety and convenience.

An ASSA ABLOY Group company

ASSA ABLOY