# Exhibit 8

# Installation and Operation Manual

# Configuring, Installing, and Using Carrier Infrastructure

**Broadband Wireless Access System**

Part Number: 104-0350-0004_DRAFT

BaseConnect, Expedience, NetProvision, and ProvisionLink are trademarks of NextNet Wireless, Inc.
©2000-2005 NextNet Wireless, Inc. All rights reserved. Revision 4_3_C

WARNING: This equipment has been tested with a 19 dBi gain antenna and found to comply with the FCC guidelines for Radio Frequency Radiation Exposure Limits as detailed below. For a single base 5 watt transmitter connected to the antenna, a minimum of 2 meters or 6.5 feet of separation between the antenna and all persons must be maintained. The minimum separation increases when additional base transmitting signals are combined and applied to the same antenna. Four base 5 watt transmitters combined to use a single antenna need a minimum separation of 4 meters or 13 feet from all persons.

Radio Frequency Radiation Exposure Limits.

**TABLE 1. Limits for Maximum Permissible Exposure (MPE)**

| Frequency range (MHz) | Electric field-strength (V/m) | Magnetic field-strength (A/m) | Power density (mW/cm 2) | Averaging time (minutes) |
|---|---|---|---|---|
| | **(A) Limits for Occupational/Controlled Exposures** | | | |
| 0.3-3.0 | 614 | 1.63 | *(100) | 6 |
| 3.0-30 | 1842/f | 4.89/f | *(900/$f^2$) | 6 |
| 30-300 | 61.4 | 0.163 | 1.0 | 6 |
| 300-1500 | — | — | f/300 | 6 |
| 1500-100,000 | — | — | 5 | 6 |
| | **(B) Limits for General Population/Uncontrolled Exposure** | | | |
| 0.3-1.34 | 614 | 1.63 | *(100) | 30 |
| 1.34-30 | 824/f | 2.19/f | *(180/$f^2$) | 30 |
| 30-300 | 27.5 | 0.073 | .2 | 30 |
| 300-1500 | — | — | f/1500 | 30 |
| 1500-100,000 | — | — | 1.0 | 30 |

f = frequency in MHz
* = Plane-wave equivalent power density

NOTE 1 TO TABLE 1: Occupational/controlled limits apply in situations in which persons are exposed as a consequence of their employment provided those persons are fully aware of the potential for exposure and can exercise control over their exposure.

Limits for occupational/controlled exposure also apply in situations when an individual is transient through a location where occupational/controlled limits apply provided he or she is made aware of the potential for exposure.

NOTE 2 TO TABLE 1: General population/uncontrolled exposures apply in situations in which the general public may be exposed, or in which persons that are exposed as a consequence of their employment may not be fully aware of the potential for exposure or can not exercise control over their exposure.

**Note:** This equipment has been tested and found to comply with the limits for a Class A digital device, pursuant to part 15 of the FCC rules. These limits are designed to provide reasonable protection against harmful interference when the equipment is operated in a commercial environment. This equipment generates, uses, and can radiate radio-frequency energy, and, if not installed and used in accordance with the installation manual, may cause harmful interference to radio communications. Operation of this equipment in a residential area is likely to cause harmful interference, in which case users will be required to correct the interference at their own expense.

**TABLE 2. Technical Information**

| | |
|---|---|
| Transmitting power | 1m watts to 2 watts<br>1m watts to 5 watts (high power option) |
| Operating voltage | 120 VAC nominal |
| Frequency band | 2500 - 2686 MHz TX/RX |
| Frequency stability | ±1.0 ppm |
| Number of channels | 31 |
| Channel bandwidth | 6 MHz |
| Modulation | Orthogonal frequency division multiplex |
| Transmission | Time division duplex/time division multiplex |

This Class A digital apparatus complies with Canadian ICES-003.

THE SPECIFICATIONS AND INFORMATION REGARDING THE PRODUCTS IN THIS MANUAL ARE SUBJECT TO CHANGE WITHOUT NOTICE. ALL STATEMENTS, INFORMATION, AND RECOMMENDATIONS IN THIS MANUAL ARE BELIEVED TO BE ACCURATE BUT ARE PRESENTED WITHOUT WARRENTY OF ANY KIND. USERS MUST TAKE FULL RESPONSIBILITY FOR THEIR APPLICATION OF ANY PRODUCT.

NOTWITHSTANDING ANY OTHER WARRANTY HEREIN, ALL DOCUMENT FILES AND SOFTWARE ARE PROVIDED “AS IS” WITH ALL FAULTS. NEXTNET WIRELESS DISCLAIMS ALL WARRANTIES, EXPRESSED OR IMPLIED, INCLUDING, WITHOUT LIMITATION, THOSE OF MERCHANTABILITY, FITNESS FOR A PARTICULAR PURPOSE AND NONINFRINGEMENT OR ARISING FOM A COUSRE OF DEALING, USAGE, OR TRADE PRACTICE.

IN NO EVENT SHALL NEXTNET WIRELESS OR ITS SUPPLIERS BE LIABLE FOR ANY INDIRECT, SPECIAL, CONSEQUENTIAL, OR INCIDENTAL DAMAGES, INCLUDING, WITHOUT LIMITATION, LOST PROFITS OR LOSS OF DAMAGE TO DATA ARISING OUT OF THE USE OR INABILITY TO USE THIS MANUAL, EVEN IF NEXTNET WIRELESS HAS BEEN ADVISED OF THE POSSIBILITY OF SUCH DAMAGES.

NextNet Wireless, Inc. recommends the antennas listed on the next page for base station installations:

Manufacturer:Stella Doradus
Frequency Range:2500-2700 MHz

| NextNet Wireess Part Number | Model / Part Number | Polarization | Gain (dBi) | Azimuth Beam-width (Degrees) | Elevation Beamwidth (Degrees) | Special Characteristics | Front to Back Ratio (dB) | Cross Pol. Disc. (dB) | Antenna Weight (lbs) | Length (in) | Width / Diame-ter (in) | Depth (in) | Windage |
|---|---|---|---|---|---|---|---|---|---|---|---|---|---|
| | 26SD9005H | Horizontal | 19 | 90 | 5 | -- | 32 | 28 | 35.2 | 63.0 | 9.1 | 5.5 | 237 lbs @ 125 mph |
| 501-1009-2701 | 26SD9890NV | Vertical | 16 | 90 | 7 | null fill | 35 | 35 | 8.6 | 35.8 | 5.5 | 4.7 | 86 lbs @ 125 mph |
| 501-1006-2701 | 26SD9860NV | Vertical | 17.5 | 60 | 7 | null fill | 40 | 30 | 8.75 | 35.8 | 5.5 | 4.7 | 86 lbs @ 125 mph |
| 501-1002-2701 | 26SD98120NV | Vertical | 15 | 120 | 7 | null fill | 21 | 30 | 8.5 | 35.8 | 5.5 | 5.3 | 86 lbs @ 125 mph |
| 501-3004-2601 | 26SD2360 | Vertical | 10 | 360 | 9 | Omni | N/A | 26 | 2.86 | 43.3 | 1.9 | -- | 100 lbs @ 125 mph |

Manufacturer:Stella Doradus
Frequency Range:3300-3600 MHz

| NextNet Wireess Part Number | Model / Part Number | Polarization | Gain (dBi) | Azimuth Beam-width (Degrees) | Elevation Beamwidth (Degrees) | Special Characteristics | Front to Back Ratio (dB) | Cross Pol. Disc. (dB) | Antenna Weight (lbs) | Length (in) | Width / Diameter (in) | Depth (in) | Windage |
|---|---|---|---|---|---|---|---|---|---|---|---|---|---|
| 501-1009-3401 | 35SD9890NV | Vertical | 16 | 90 | 7 | null fill | 35 | 35 | 5.4 | 28 | 5.5 | 4.7 | 67 lbs @ 125 mph |
| 501-1006-3401 | 35SD9860NV | Vertical | 17.5 | 60 | 7 | null fill | 33 | 30 | 6.5 | 28 | 5.5 | 4.7 | 67 lbs @ 125 mph |
| 501-1002-3401 | 35SD98120NV | Vertical | 15 | 120 | 7 | null fill | 25 | 30 | 5.4 | 28 | 5.4 | 5.3 | 67 lbs @ 125 mph |
| 501-3004-3601 | 35SD3360 | Vertical | 13 | 360 | 6 | Omni | N/A | 28 | 5.72 | 42.1 | 1.9 | -- | 4.95 lbs @ 135 mph |

# CONTENTS

## About this guide

**Preface overview** ..... **xiii**

**About this guide** ..... **xiii**
Chapters in this guide ..... xiv

**Additional documentation** ..... **xv**

**Typographical conventions this guide uses** ..... **xvi**

**Where to go for more help** ..... **xvii**
Technical support ..... xvii
Documentation additions and corrections ..... xvii

## Introduction to backhaul installations

**Chapter overview** ..... **1-1**

**System overview** ..... **1-1**
System overview ..... 1-1
Infrastructure overview ..... 1-2

**Installation overview** ..... **1-5**
Installation steps common to RMB and I-BTS ..... 1-5

**Planning the installation** ..... **1-7**
Choosing an installation location ..... 1-7
Assessing network access provider equipment needs ..... 1-8
Planning for the antennas and antenna installation tips ..... 1-9
Designing the deployment of base stations ..... 1-10

## Configuring network architecture

**Chapter overview** ..... **2-11**

**Architecture overview** ..... **2-11**

**Configuring switches** ..... **2-12**
Configuring the switch at the cell site ..... 2-12
Configuring the head end switch ..... 2-12
Configuring the ISP switch ..... 2-12

**Selecting links and circuits** ..... **2-12**
Selecting links based on maximum rate needed ..... 2-12
Selecting links based on another rate ..... 2-13

## Configuring the AP server

**Chapter overview** ..... **3-15**

**AP server overview** ..... **3-15**

**Starting the AP server** ..... **3-15**

**Configuring the AP server** ..... **3-16**
Defining AP server users and administrators ..... 3-16
Defining zone names ..... 3-21
Defining ISPs ..... 3-22
Changing ISP information ..... 3-24
Monitoring ISPs and base stations ..... 3-25

## Configuring a standby AP server

**Chapter overview** ..... **4-27**

**Standby AP server overview** ..... **4-27**

**Configuring the base station with standby AP server information** **4-27**
Setting up common configuration file and directory ..... 4-28
Switching from the primary AP server to the secondary AP server ..... 4-30

## Configuring base stations

**Chapter overview** ..... **5-31**

**Before you begin** ..... **5-31**

**Setting up connection methods used to configure base stations** ..**5-32**
Setting up terminal emulation access ..... 5-32
Setting up Telnet access ..... 5-32
Setting up web access ..... 5-34
Setting up SNMP access ..... 5-35

**Setting base station configuration parameters** ..... **5-37**
set airlink channel ..... 5-37
set airlink downlink power ..... 5-38
set airlink downlink bias ..... 5-39
set system location ..... 5-41
set system name ..... 5-42
set airlink state ..... 5-42

**Recommended parameter changes** ..... **5-42**
set system cell ..... 5-42
set system sector ..... 5-42
set DHCP state ..... 5-42
Setting legacy and management VLAN IDs ..... 5-43

**Setting up Syslog** ..... **5-43**

**Configuring the authority that grants network access to CPEs** ....**5-44**
Using base station caching feature for re-registering CPEs ..... 5-44
Remote authority: setting up the provisioning server to grant CPEs network access ..... 5-45

Local authority: setting up the base station to grant CPEs network access ..... 5-46

**Configuring the time signal used by base stations ..... 5-46**
Configuring the GPS to supply the time signal ..... 5-46
Configuring a base station to supply a time signal ..... 5-47

## Installing the integral base transceiver station (I-BTS)

**Chapter overview ..... 6-49**

**Before you begin ..... 6-49**

**Cell wiring ..... 6-50**

**Installation overview ..... 6-51**

**Antenna and bracket assembly for I-BTS ..... 6-51**

**Base station connectors ..... 6-55**
Ethernet (data) and power connector ..... 6-56
TVS module connectors ..... 6-58
GPS connectors ..... 6-59
Serial interface connector ..... 6-60
Antenna connector ..... 6-60

**Mounting and grounding the base station ..... 6-61**
Mounting the base station to a wall ..... 6-61
Mounting the base station to a tower ..... 6-62
Mounting the base station to a 19 inch rack ..... 6-62
Grounding the base station ..... 6-62

**Connecting the antenna to the base station ..... 6-63**
Antenna connection tips ..... 6-63
Connecting the antenna to the base station ..... 6-63

**Connecting the GPS equipment to a base station ..... 6-63**
GPS equipment mounting tips ..... 6-63
Connecting the GPS unit to the base station ..... 6-64

**Connecting to the backbone network ..... 6-64**

**Powering base stations ..... 6-65**
Powering tips ..... 6-65
Powering the base station ..... 6-65

## Installing the rackmount base station (RMB)

**Chapter overview ..... 7-67**

**Before you begin ..... 7-67**

**Installation overview ..... 7-68**

**Installing the mounting bracket and attaching cabinet to the 19-inch rack ..... 7-69**

**Attaching the switch and power supply to the rack ..... 7-70**

**Installing the RMBs into the cabinet** ..... **7-70**

**Connecting RMBs to cell (cell wiring)** ..... **7-71**

**Connecting power to the RMBs** ..... **7-73**
Powering the base station ..... 7-73
Powering tips ..... 7-75

**Grounding the RMBs** ..... **7-76**

**Turning on the RMB's power** ..... **7-77**

**Base station connectors** ..... **7-78**
GPS connectors ..... 7-78
Power supply cable connections ..... 7-79
Diagnostic cable connections ..... 7-79
Fuses and Ethernet cable connections on cabinet ..... 7-80

**Wiring alarms for RMBs** ..... **7-82**

**Connecting to the backbone network** ..... **7-82**

## Testing and managing the network

**Chapter overview** ..... **8-83**

**Testing the setup overview** ..... **8-83**
Installing the ISP's provisioning server ..... 8-83
Testing the connection between the AP server and the provisioning server ..... 8-84
Ensuring CPE access to ISP VLAN ..... 8-84

**Network management overview** ..... **8-84**
Fault isolation overview ..... 8-85
Performance management overview ..... 8-86
Configuration management overview ..... 8-86
Accounting feature overview ..... 8-86

## GPS status codes

**Appendix overview** ..... **A-87**

## Supported frequency ranges

**Appendix overview** ..... **B-89**
MMDS frequency range ..... B-89
3.3 GHz frequency range ..... B-91
3.5 GHz frequency range ..... B-91

# FIGURES

## About this guide

## Introduction to backhaul installations

Rackmount base station (RMB) ..... 1-2
Rackmount base stations inside cabinet ..... 1-3
Base station for indoor or outdoor installation ..... 1-4

## Configuring network architecture

## Configuring the AP server

AP server log in page ..... 3-16
Access Provider Management page ..... 3-17
Configure page ..... 3-18
Administrators page ..... 3-19
New User page ..... 3-20
Base Station Attributes page ..... 3-21
ISP Management page ..... 3-22
Create new ISP page ..... 3-23
ISP details page ..... 3-24
Monitor ISPs- Base Stations page ..... 3-25
Base Station Properties page ..... 3-26

## Configuring a standby AP server

Configuration files to share between primary and secondary AP servers ..... 4-28

## Configuring base stations

## Installing the integral base transceiver station (I-BTS)

Cell wiring diagram ..... 6-50
Attaching L-shaped brackets to I-BTS ..... 6-51
Attaching antenna bracket to the L-shape bracket ..... 6-52
Attaching tilt guide bracket to the bracket on the antenna ..... 6-52
Attaching antenna cable to I-BTS ..... 6-54
Base station connectors ..... 6-55
Ethernet (data) and power connector ..... 6-56
Ethernet (data) and power connector ..... 6-56
TVS module connector: Base station connector ..... 6-58
TVS module connector: power/Ethernet connector ..... 6-58

GPS connector ..... 6-59
Serial interface connector ..... 6-60
Base station mounting template ..... 6-61

## Installing the rackmount base station (RMB)

Cabinet mounting bracket ..... 7-69
Location of switch and power supply in rack ..... 7-70
Cell wiring diagram ..... 7-72
Power connections on bottom of cabinet ..... 7-74
Grounding the RMBs ..... 7-76
RMB LEDs ..... 7-77
Connector on the serial cable used in configuring base stations ..... 7-78
Diagnostic cable: DB9 connector pins ..... 7-80
Fuses and Ethernet cable connections on cabinet ..... 7-80
Removing fuse from cabinet ..... 7-81
External alarm connections ..... 7-82

## Testing and managing the network

## GPS status codes

## Supported frequency ranges

# TABLES

## About this guide

Chapters and appendices in the guide ..... preface-xiv
Additional documentation ..... preface-xv
Typographical conventions ..... preface-xvi
Contacting technical support ..... preface-xvii

## Introduction to backhaul installations

Advantages/disadvantages of location choices ..... 1-8

## Configuring network architecture

## Configuring the AP server

Create new ISP page ..... 3-23

## Configuring a standby AP server

## Configuring base stations

Transmit power levels ..... 5-38
Transmit power levels ..... 5-39
Downlink rate based on modulation method ..... 5-40
Uplink data rate for 4-QAM modulation method ..... 5-40
Uplink data rate for 16-QAM modulation method ..... 5-40
Uplink data rate for 64-QAM modulation method ..... 5-40
Uplink data rate for 16-QAM lite modulation method ..... 5-41
Methods used to grant CPEs access to ISPs' VLANs ..... 5-44

## Installing the integral base transceiver station (I-BTS)

Ethernet/power base station cable choices ..... 6-57
Ethernet/power cable pins ..... 6-57
Function of wires in cable 597-6027-0xxx ..... 6-57
Recommended mating connectors (optional) ..... 6-59

## Installing the rackmount base station (RMB)

Connector type to use with cabinet connectors ..... 7-74
Description of LEDs on the base station ..... 7-77
Power cable pins ..... 7-79
Diagnostic cable pin connections (RJ-45) ..... 7-79

## Testing and managing the network

## GPS status codes

GPS status codes and meaning ..... A-87

## Supported frequency ranges

# ABOUT THIS GUIDE

## Preface overview

Thank you for choosing the Expedience™ system from NextNet Wireless. This guide describes how to configure and install the system's base transceiver station (BTS) and the rack-mounted base stations system (RMB).

This preface describes:

- Audience for this guide
- Additional documentation
- Typographical conventions used in this guide
- Where to go for more help

## About this guide

This guide describes how to configure and install the system's base station. It also describes how to configure and work with the access provider (AP) server.

This guide is intended for network and system administrators who must install, configure, and manage base stations and the AP server. This guide provides detailed configuration and installation instructions.

It is assumed readers of this guide are familiar with:

- Basic networking concepts
- Layer 2 (link layer) of OSI model
- Cell structure engineering

## Chapters in this guide

Table i describes the chapters and appendices in this guide.

**Table i Chapters and appendices in the guide**

| Chapter | Description |
|---|---|
| Preface | Provides an overview of the guide, related documentation, the guide's intended audience, typographical conventions, and methods for obtaining technical support. |
| Chapter 1 Introduction to backhaul installations | Provides an overview of the Expedience system and of the system's base station component. It provides an installation overview and describes things you need to consider before installing base stations. |
| Chapter 2 Configuring network architecture | Describes a simple network topology and provides an overview of how to configure switches at the cell site, the head end, and the ISP sites. |
| Chapter 3 Configuring the AP server | Describes how to configure and use the access provider (AP) server. |
| Chapter 4 Configuring a standby AP server | Explains how to configure a standby AP server. The network will use the standby server if the primary server becomes unavailable. |
| Chapter 5 Configuring base stations | Describes how to configure base stations, including how to use Telnet or Term to set up a base station before deploying it and mounting it to a tower or building. The chapter also describes how to configure base stations after you have deployed them, for example, to maintain the system and optimize system performance. |
| Chapter 6 Installing the integral base transceiver stations (I-BTS) | Explains how to install a base station at a cell site. Also describes the components used to mount the base station on a building or tower. |
| Chapter 7 Installing the rackmount base station (RMB) | Describes how to install the rackmount base station (RMB), including installing the cabinet onto a 19 inch rack, installing the power supply and switch, installing the RMB into the base station cabinet and connecting the RMBs to the cell and to cell-site components. |
| Chapter 8 Testing and managing the network | Explains how to work with the ISP to ensure the network is installed and running correctly. |
| Appendix A GPS status codes | Describes the codes that the GPS can generate. |
| Appendix B Supported frequency ranges | Provides reference information about the frequency ranges in which the equipment can operate. |

# Additional documentation

If you cannot find the information you need in this guide, you may want to refer to the documents described in Table ii.

**Table ii Additional documentation**

| Guide | Description |
|---|---|
| Getting Started with the Expedience System | Provides an overview of the Expedience system, its components, its network architecture, and options for selecting a deployment scheme for the system in the service provider (backbone) network. |
| Configuring, Installing, and Using Carrier Infrastructure | This is the guide you are currently reading. Describes how to set up and configure base stations, including how to connect antenna systems, the backbone network equipment, and global positioning system (GPS) equipment.<br>Also provides an overview of the AP server and how to configure the AP server for your network. |
| Using the NextNet Operating System (NNOS) | Describes the NextNet operating system (NNOS), which is the common operating system for the system's base station devices and customer premise equipment (CPE) devices. This guide describes how you can configure the operating system on devices by using commands issued from Telnet, Terminal, or a Web interface. |
| Configuring and monitoring the ISP network | Intended for use by an ISP. Provides an overview of the Expedience system, its components, and its network architecture. This guide describes how to install and configure the ISP's provisioning server. It describes how to define service level agreements (SLAs). |
| Expedience Broadband Wireless Access Modem | Intended for use by your subscribers, this guide describes how to install a RSU (that is, an indoor CPE) at a subscriber site. Your subscribers can completely install the RSU.<br>The guide explains, in detail, how to connect the RSU to a computer or to a network device. It explains system pre-requisites, and provides troubleshooting information.<br>This guide is available in electronic (pdf) format, on the CD-ROM that accompanies the LinkMonitor software. |
| Installing the RSU | Intended for use by your subscribers, this guide describes how to quickly install a RSU directly to a computer. |
| Expedience NLOS Outdoor Broadband Wireless Access Modem | Intended for use by a professional installer, this guide describes how to install an outdoor CPE. |

# Typographical conventions this guide uses

Table iii describes the typographical conventions that this guide uses.

**Table iii Typographical conventions**

| Convention | Meaning |
|---|---|
| **Bold face** | If you are using a graphical user interface (GUI), bold face indicates a button, menu option, icon, and so on, that you manipulate directly.<br>If you are using a command line interface, bold face indicates commands and keywords.<br>Bold face can also indicate information that you must enter. |
| *Italic face* | Arguments for which you supply values are in italic face. |
| **`Courier (mono-spaced) font`** | A command you type in, exactly as it appears, at a command line. |
| [ ... ] | Arguments that appear inside square brackets [ ], are optional.<br>Also, when the guide shows a system prompt, the default system prompt appears inside square brackets. |
| {..} \| {..} | Required keywords are grouped in braces and separated by vertical bars. |
| Note | Notes contain helpful suggestions for the reader. |
| <...> | Non-printing characters, such as passwords, appear in angle brackets. |
| Caution | Cautions contain information about which the reader must exercise care. |
| Warning | Warnings contain information about how readers might do something resulting in harm to themselves or in damage to equipment or data. |

# Where to go for more help

This section describes how to obtain support for your NextNet Wireless product. It also describes how to provide comments on the product documentation.

## Technical support

NextNet Wireless is committed to providing our customers with high quality technical support. Table iv describes how to contact technical support.

**Table iv Contacting technical support**

| Contact | Description |
|---|---|
| Phone | 1.877.962.2200 |
| E-mail | support@nextnetwireless.com |
| Web site | www.nextnetwireless.com |

## Documentation additions and corrections

If you find documentation errors, or want to see additional information not presented in this guide, please contact our documentation group at the following e-mail address:

techdocs@nextnetwireless.com

CHAPTER

# 1

# INTRODUCTION TO BACKHAUL INSTALLATIONS

## Chapter overview

This chapter provides an overview of the Expedience system and of the system's infrastructure components:

- The base station, which comes in two forms:
  - The integral base transceiver station (I-BTS)
  - The rackmount base station (RMB)
- The access provider (AP) server
- The network switches

The chapter provides an installation overview. It also describes things you need to consider before installing base stations.

## System overview

This section provides a brief overview of the Expedience system, as well as the infrastructure that network access providers must install. For additional system overview information, refer to the guide "Getting Started with the Expedience System."

### System overview

NextNet Wireless designed the Expedience system to give small office, home office (SOHO), and residential subscribers high speed, wireless access to network communication systems, such as the Internet. The Expedience system is an end-to-end broadband wireless access system and operates in several frequency ranges.

The system was designed to allow network access providers to re-sell network bandwidth to ISPs on a wholesale basis. In turn, the ISPs sell access to their subscribers on a retail basis. To support multiple ISPs on the network, the system uses virtual LAN (VLAN) technology.

The system does **not** have a line-of-sight (LOS) requirement between the base station and the CPEs. The air link between base stations and CPEs functions as an Ethernet bridge carrying IP/ARP packets. Time division duplex (TDD) and cellular deployment offer you flexibility in adjusting downlink versus uplink airtime.

# Infrastructure overview

The base station and AP server are network infrastructure components supplied by NextNet Wireless. The network access provider configures and maintains this equipment.

Additional infrastructure components include switches for use at the base station cell sites, and the head-end switch. These switches are supplied by the network access provider. If desired, the network access provider can purchase the switches through NextNet Wireless.

## Base station overview

The base station maintains contact with CPEs at your subscribers' sites. The base station integrates the transceiver and modem into one device.

Under typical configurations, the base station covers an approximate radius of 2 to 3 miles, with a 5 mile maximum. If desired, network access providers can configure their base stations to cover a maximum radius of 20 miles. To cover up to 20 miles, the network access provider enables the extended range feature.

There are two types of base stations offered by NextNet Wireless:

- An indoor-only base station that slides into a base station cabinet after the cabinet has been installed on a standard 19 inch rack. This base station is known as the rackmount base station (RMB).
- A base station that can be installed indoors or outdoors. This base station can be installed on a tower, on a roof, on a wall, or on a rack. The antenna can be installed on the base station itself, or the antenna can be installed separately. This base station is known as the integral base transceiver station (I-BTS).

Figure 1.1 shows an individual RMB which will be installed inside a cabinet. This cabinet is then installed on a standard 19 inch rack. Up to 8 RMBs can be installed inside a cabinet.

**Figure 1.1 Rackmount base station (RMB)**

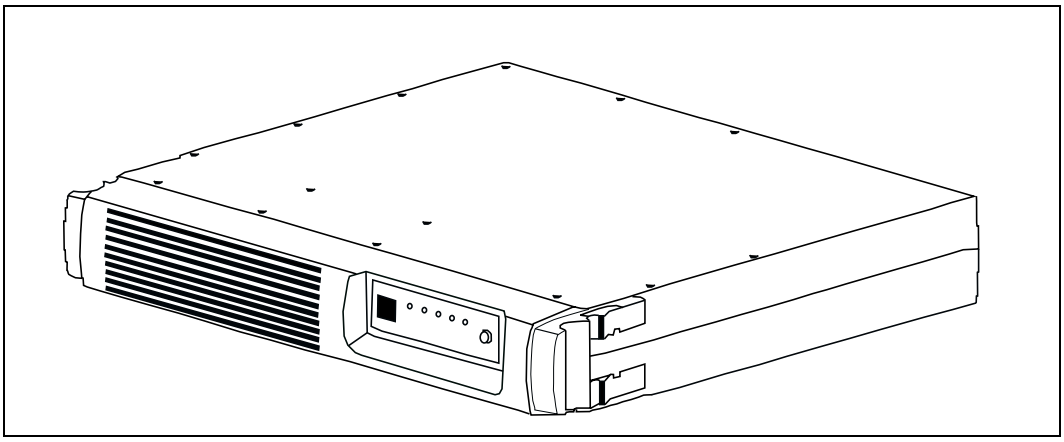

Figure 1.2 shows 8 RMBs installed inside the base station cabinet.

**Figure 1.2 Rackmount base stations inside cabinet**

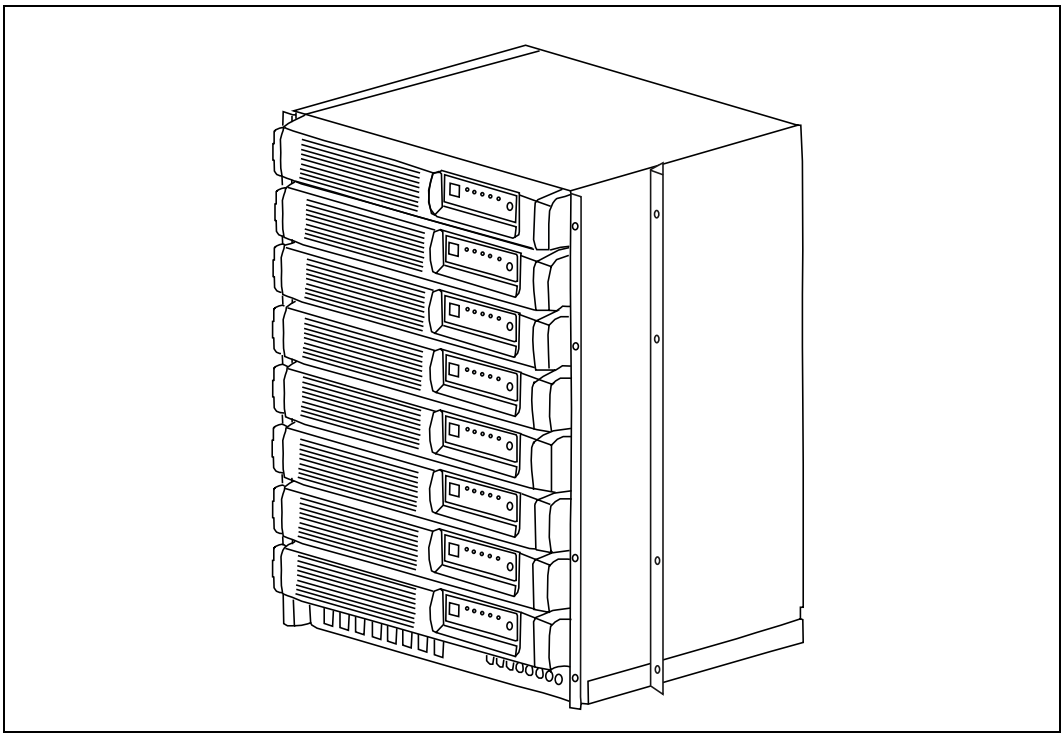

Figure 1.3 shows a base station that can be installed outdoors or indoors The figure shows the antenna installed on the base station. If desired, you can install the antenna separately from the base station.

**Figure 1.3 Base station for indoor or outdoor installation**

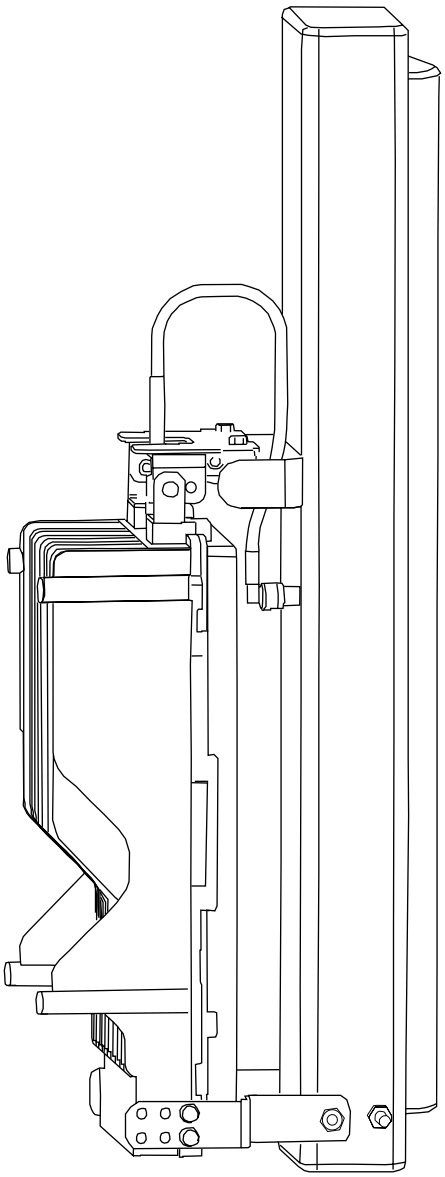

## AP server overview

The AP server acts as a relay for the CPE registration events which arrive from base stations (on the management VLAN) and are forwarded to the correct ISP provisioning server (over the control VLAN).

The base stations each have a TCP/IP connection to the AP server. The base stations use their connection to forward CPE registration requests to the AP server.

The AP server is provided by NextNet Wireless.

### Head-end switch, base station cell switch, and ISP switch overview

The network access provider must supply switches for their network, which include the head-end switch and the switches used at the base station cell site. The network access provider must also assist their ISPs when the ISPs program their switches with the proper ISP VLAN IDs.

The base stations are grouped together into cells, with between 1 and 6 base stations at a cell site. (If the network access provider chooses to stack base stations, more than 6 base stations can exist in a cell.) To form the base station LAN, the base stations are connected to a switch at the cell site.

WAN links are then used to connect the cell sites to the head end switch. The head end switch splits incoming traffic to the management VLAN and to the appropriate ISP VLAN. The ISP then has a configured switch that controls traffic coming into and out of the ISP VLANs.

# Installation overview

This section provides a high-level overview of how to install the indoor, rackmount base station (RMB), as well as the integral base transciever stations (I-BTS) that can be installed outdoors or indoors.

## Installation steps common to RMB and I-BTS

1. Plan the installation of base stations:
   a. Choose an appropriate location for the base station installation. For more information, refer to the section "Choosing an installation location" on page 1-7 in this chapter.
   b. Design the deployment of base stations. Determine how base stations will be deployed by marking a location on a map that shows where each base station will be installed. Also determine naming conventions for cells, sectors, zones, and base stations names. For more information, refer to the section, "Designing the deployment of base stations" on page 1-10.
2. Plan for system components that you need to supply to complete the network. For more information, refer to the section "Assessing network access provider equipment needs" on page 1-8 in this chapter.
3. Install and configure the access provider (AP) server. For more information, refer to Chapter 3, "Installing the AP server," in this guide.
4. On the AP server, configure zone names, VLAN IDs, and the ISP IDs. For more information, refer to Chapter 3, "Installing the AP server," in this guide.
5. Using the NextNet Operating System (NNOS), configure the base stations before deploying them in the field. For more information, refer to the chapter "Configuring base stations" in this guide.

### RMB installation overview

This section provides a high-level overview of how to install the base station cabinet onto a 19 inch rack, and then how to install the base stations into the cabinet.

1. Slide the metal base station cabinet into the 19 inch rack.
2. Install the power supply onto the 19 inch rack.

3. Install the switch onto the 19 inch rack.
4. Slide each base station into the appropriate slot in the cabinet on the rack.
5. If you are using a 5 watt base station, install the 5 watt channel specific filter.
6. Plug in the cables which include:
   - GPS cable
   - Antenna cable
   - Ethernet cables
   - Power cables
   - Alarm cables

   Also, make sure that the fuses are installed properly.
7. Plug in the power cable to the RMBs in the cabinet, make sure the power supply is working, then turn on each RMB.

## I-BTS installation overview

This section provides a high-level overview of the base station installation process. Other sections in this guide then explain these installation tasks in detail.

The tasks you perform to deploy base stations are:

1. Mount the base station at the site you selected. For more information, refer to the section "Mounting and grounding the base station" on page 6-57 in this guide.
2. Connect the antenna to the base station, as described in the section "Connecting the antenna to the base station" on page 6-59.
3. Mount the GPS device and connect it to the base station. One GPS device can service the multiple base stations at a cell site. For more information, refer to the section "Connecting the GPS equipment to a base station" on page 6-59 in this guide.
4. Connect the base station to the transcient voltage suppressor (TVS) module, then connect the TVS module to your network switch.

   The TVS module splits the connection: one connection goes to a switch that connects to your network, and the other goes to a power supply. For more information, refer to the section "Connecting to the backbone network" on page 6-60 in this guide.
5. Power the base stations by connecting the TVS module to the power supply. For more information, refer to the section "Powering base stations" on page 6-61 in this guide.
6. Configure cell site switches, the head end switch, and the ISP switches. For more information, refer to "Configuring switches" on page 2-12 in this guide.
7. Test the network by working with an ISP to:
   - Install the ISP's provisioning server
   - Test the AP server to provisioning server connection.
   - Test that CPEs can access the ISP's VLAN(s).

# Planning the installation

This section describes issues you need to consider before you install the base stations, including:

- Choosing locations for the base station installation
- Planning for service provider equipment components
- Selection antennas
- Defining naming conventions for cells, sectors, and base stations and for VLANs

## Choosing an installation location

The base station's location at a site depends on many factors, including the site's physical environment, the coverage pattern you want to achieve, and the ease of maintenance you require.

### RMB installation location

The RMB is always installed indoors, inside the base station cabinet and on a standard 19 inch rack. In turn, the rack is installed in an indoor equipment room or in another type of indoor housing unit such as a shed near the tower.

## BTS installation location

Table 1.1 describes some of the locations you might want to consider for a BTS.

**Table 1.1 Advantages/disadvantages of location choices**

| Location | Advantages | Disadvantages |
|---|---|---|
| On tower, at antennas | Installing at the antennas offers cost savings, due to the fact that you can use a shorter coaxial cable to connect the base stations to your cells. This also offers the ability to transmit at higher power levels, since there is lower signal loss in shorter cables. | When you install base stations near the top of the tower, installation and maintenance are more difficult. |
| At base of tower | Placing the base stations at the base of a tower offers simpler installation and maintenance than a base station installed on the tower, at the antennas.<br>Base station installation and maintenance are simpler than other options; | If you install at the base of the tower, you need to run a coaxial cable from the base stations to the antennas. This cable must be of sufficient size to reduce signal loss, which may increase costs.<br>Installation still requires you to install the antennas and coaxial cable. |
| On rooftop | You can use a shorter coaxial cable to connect base stations to antennas. As such, you can probably operate at higher power levels, and still stay within signal loss criteria.<br>Rooftop access is usually available, making installation and maintenance easier. Also, a housing unit for the backbone network switch, power supplies, and other equipment is typically available. | You need to obtain permission to use a rooftop, and comply with building codes. |

**Note:** Regardless of the location you choose, plan to provide a weatherproof housing unit for the network switch, the power supply, and the TVS equipment.

## Placement of base stations and switches on network

Make sure your network design places the base stations behind a switch so that the base station only sees Ethernet traffic addressed to it. The switch you choose needs to be able to handle the Ethernet traffic on your network

# Assessing network access provider equipment needs

Before you install and deploy the base station, ensure you have made provisions for the following components:

- Power and data connection between the base station and your network
- Global position system (GPS) for proper TDD functions. You must use the GPS supplied with the Expedience system.
- Antenna system for transmitting and receiving signals for the base stations.

- SNMP server
- DHCP server, if desired, to supply IP addresses to base stations
- AP server
- Weatherproof housing for the backbone network switch, power supplies, and UPS. Also supply weatherproof housing for the TVS module, which provides lightning protection.
- Coaxial cable to connect the base station to the antenna.
- Tower or building structure on which to mount cell site equipment.

### Equipment needs of ISP

As a network access provider, you provide network bandwidth to ISPs. The ISPs in turn sell network access to subscribers. Make sure your ISPs plan for the following pieces of equipment on the ISP VLAN:

- DHCP server
- Customer care server and a customer relationship management application
- Provisioning server
- Switch to receive and direct traffic from the network access provider
- Router to route traffic to the Internet

## Planning for the antennas and antenna installation tips

The type of antenna you choose depends on the cell type and pattern you want to use. Make sure:

- The antenna is a high-gain antenna, preferably at least 15dBi or higher.
- The installation of the antenna complies with the vendor's installation directions, and that it meets building codes.

After you have installed an antenna, you need to connect it to a mounted base station. For instructions on connecting the antenna to a base station, refer to the section "Connecting the antenna to the base station" on page 6-59.

## Designing the deployment of base stations

To plan for how base stations will be deployed:

1. Determine a naming convention for base stations.
2. Using a map of the area to be covered, define the zone names that will be used.

   For example, an access provider can divide a metropolitan areas into North, South, East, West, and Central zones. The network access provider then assigns base stations to a specific zone by using the set system location command. Keep in mind that multiple base stations may be assigned to the same zone. Zones allow the ISPs to differentiate services to subscribers by allowing subscribers to operate in specific regions or clusters of zones.
3. On a map, mark each location where base stations are installed.
4. For each base station, document your design choices. Please note that some parameters are optional, depending on how you design the system.
   - Base station name (required)
   - Zone name (required)
   - Cell name (optional)
   - Sector name (optional)
   - Channel (required)
   - Default VLAN for legacy CPEs (optional, default is 1)
   - Management VLAN ID (optional; default ID is 1)

CHAPTER

# 2

# CONFIGURING NETWORK ARCHITECTURE

## Chapter overview

This chapter describes a simple network topology. It provides an overview of how to configure switches at the cell site, the head end, and the ISP sites.

## Architecture overview

The hierarchy of the network architecture uses the concept of two layers: the access layer and the backbone layer.

The functions of the **access layer** include connecting users — which include subscribers and the ISPs — to the backbone layer.

Subscribers use components on the access layer (the CPEs and the base stations) to obtain broadband network services. The subscriber's CPE communicates with a base station over a radio link which is commonly called the air link. The base stations that communicate with the CPEs are grouped into cells. The base stations in each cell are connected to a switch at the cell site and a base station LAN is formed. The switches at the cell sites then use WAN links to connect to the head-end switch.

The ISPs also use the access layer to connect to the backbone layer. An ISP receives network access requests from components on the backbone layer (specifically the AP server on the management VLAN). These requests for access are sent to the appropriate ISP. The ISP then grants or denies the request. If access is granted, the ISP provides the subscriber's host computer with an IP address and traffic is shaped for that host computer according to the subscriber's service level agreement (SLA). Traffic to and from the host computer travels through the backbone layer

The functions of the **backbone layer** include quickly switching incoming WAN trunk traffic to the management VLAN and to the ISP VLANs. The backbone layer also returns Internet traffic from the ISP to the appropriate base station and subscriber's CPE.

# Configuring switches

This section describes configuration of the following switches:

- Switch connecting base stations at the cell site
- Head end switch
- ISP switch

## Configuring the switch at the cell site

At the cell site, the network access provider must program a port on the switch to be a WAN trunk to the head end switch.

## Configuring the head end switch

WAN trunk ports on the head end switch must be configured to accept traffic from the cell sites.

The head end switch then splits the traffic to the Management VLAN and the ISP VLANs. The network access provider configures edge ports on the head end switch with the Management VLAN ID, and the IDs of all the ISP VLANs.

## Configuring the ISP switch

The ISP switch must be configured with the IDs of VLANs provided to the ISP by the network access provider. A port on the switch is also configured with the ID of the control VLAN.

# Selecting links and circuits

Network access providers must select the links or circuits that connect the cells to the backbone network. Each cell may have one or more base stations, and each base station serves a sector within a cell. Service providers typically deploy cells in four or six sectors.

Downlink and uplink capacities are:

- For downlink, the base station capacity ranges from 1.364 to 3.198 Mbps.
- For uplink, the capacity ranges from 1,249 to 198 Kbps.

Typically, you adjust the downlink air time to be some multiple of the bandwidth of the uplink. This is because browsing requests from your subscribers will most likely be shorter than responses. Therefore, as an example, you can configure a base station for a capacity of 3.030 Mbps downlink, and 296 Kbps uplink.

Some commonly used link types to backhaul cell traffic are DS-3 and point-to-point microwave connections.

## Selecting links based on maximum rate needed

You can choose a link based on the maximum bit-transfer rate you might need. For example, you might use DS-3 circuits to connect cells to a switch, and then connect those switches together, using the appropriate higher-rate links.

## Selecting links based on another rate

You might want to choose a link providing another data transfer rate. The link you choose might depend on the expected and actual traffic rates for a given cell.

Choosing this option means you get lower cost circuits, but you also might get lower throughput, increased response time, and so on.

CHAPTER

# 3

# CONFIGURING THE AP SERVER

## Chapter overview

This chapter describes how to configure and use the access provider (AP) server.

## AP server overview

All base stations connect to the AP server using a TCP/IP session. Using this connection, the base stations transfer incoming registration requests from CPEs to the AP server. The AP server forwards the request to the proper provisioning server for authorization.

The AP server defines the zones and ISPs that comprise network access provider's network.

Note the following about the AP server:

- The connection between the AP server and the provisioning server is always established from the AP server to the server. Network access providers or ISPs cannot use the provisioning server to define or attempt a connection back to the AP server.
- The AP server does NOT accept CPE registrations from base stations that do not have a zone setting that the AP server can recognize.

## Starting the AP server

The AP server was designed to use a Java servlet called Tomcat.

1. To run the Tomcat server, type the following at a command prompt:

   ```
   net start tomcat
   ```

2. To stop the Tomcat server: type the following at a command prompt:

   ```
   net stop tomcat
   ```

3. To verify that the server is installed correctly, open an Internet browser. In the browser's address field, type the following address:

   http://localhost:8080/ap

# Configuring the AP server

To configure the AP server, you must define AP server users, configure zone names, VLAN IDs, ISP names, and ISP IDs.

## Defining AP server users and administrators

To define users and administrators of the AP server:

**1** Open a web browser. In the browser's address field, type the address of the AP server.

A log in page appears.

**Figure 3.1 AP server log in page**

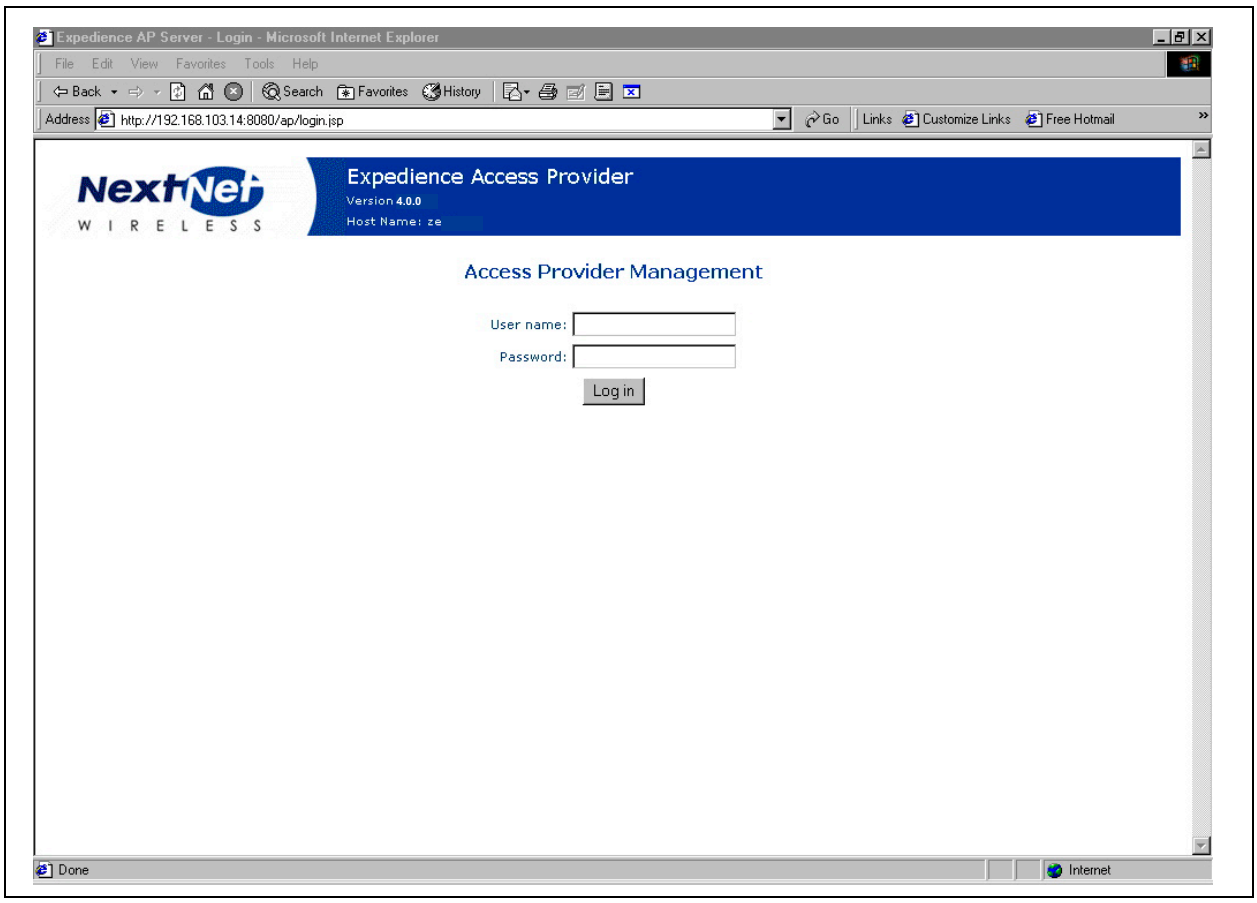


If you are logging into the server for the first time, log in with the following defaults:

- User name: administrator
- Password: password

If you are logging in for the second or subsequent time, enter your user name and password in the appropriate fields.

The Access Provider Management page opens.

**Figure 3.2 Access Provider Management page**

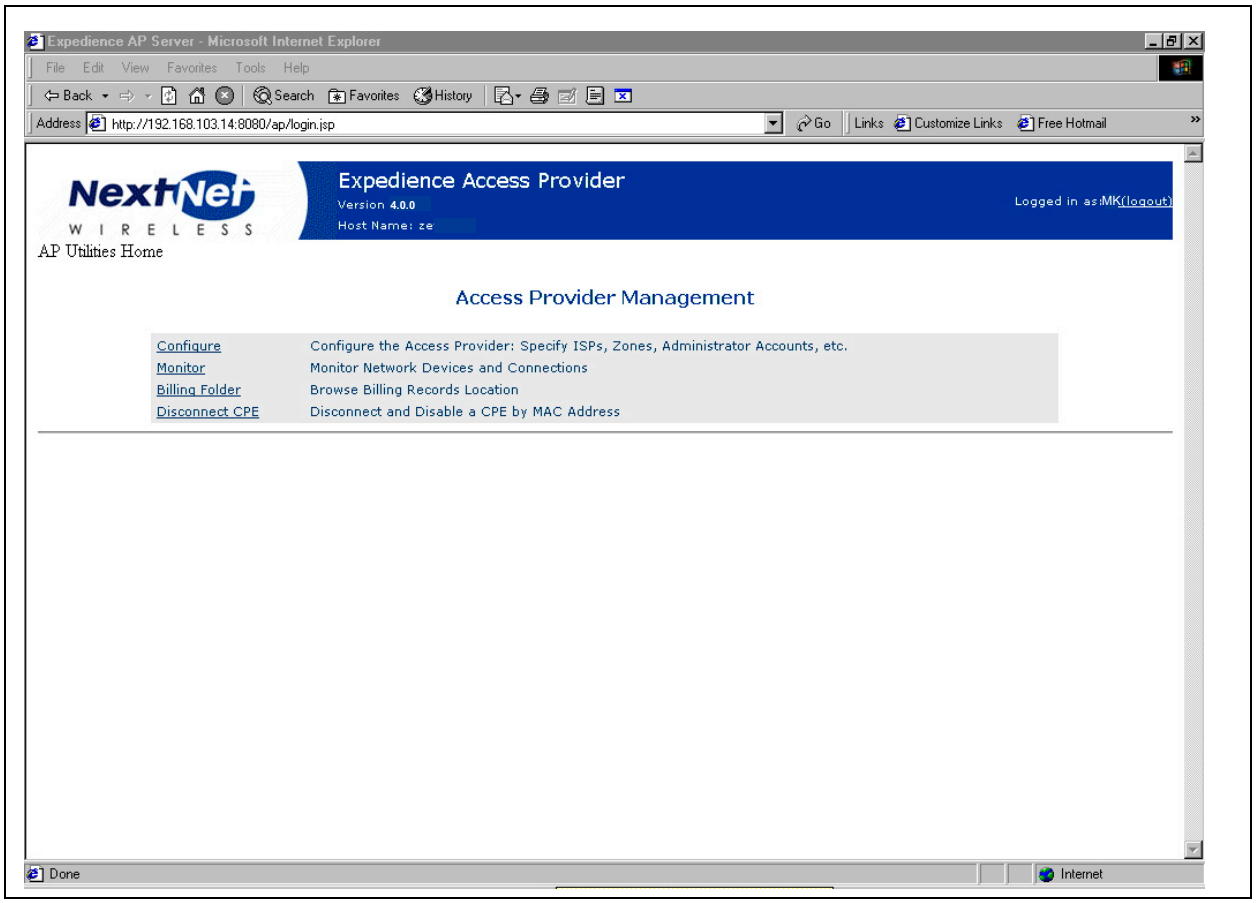

2 From the Access Provider Management page, click the **Configure** link. The Configure page opens.

**Figure 3.3 Configure page**

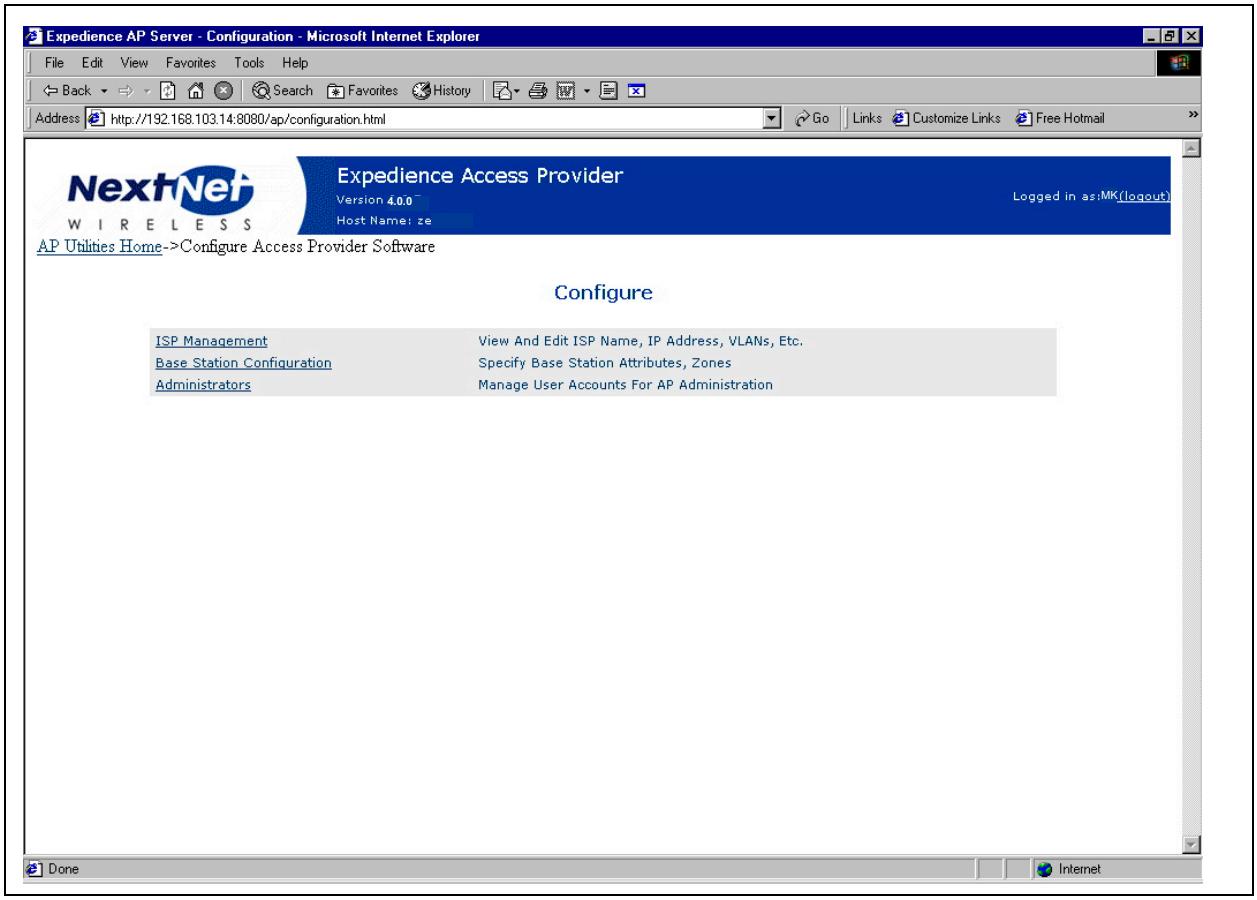

**3** From the Configure page, click **Administrators**.The Administrators page opens.

**Figure 3.4 Administrators page**

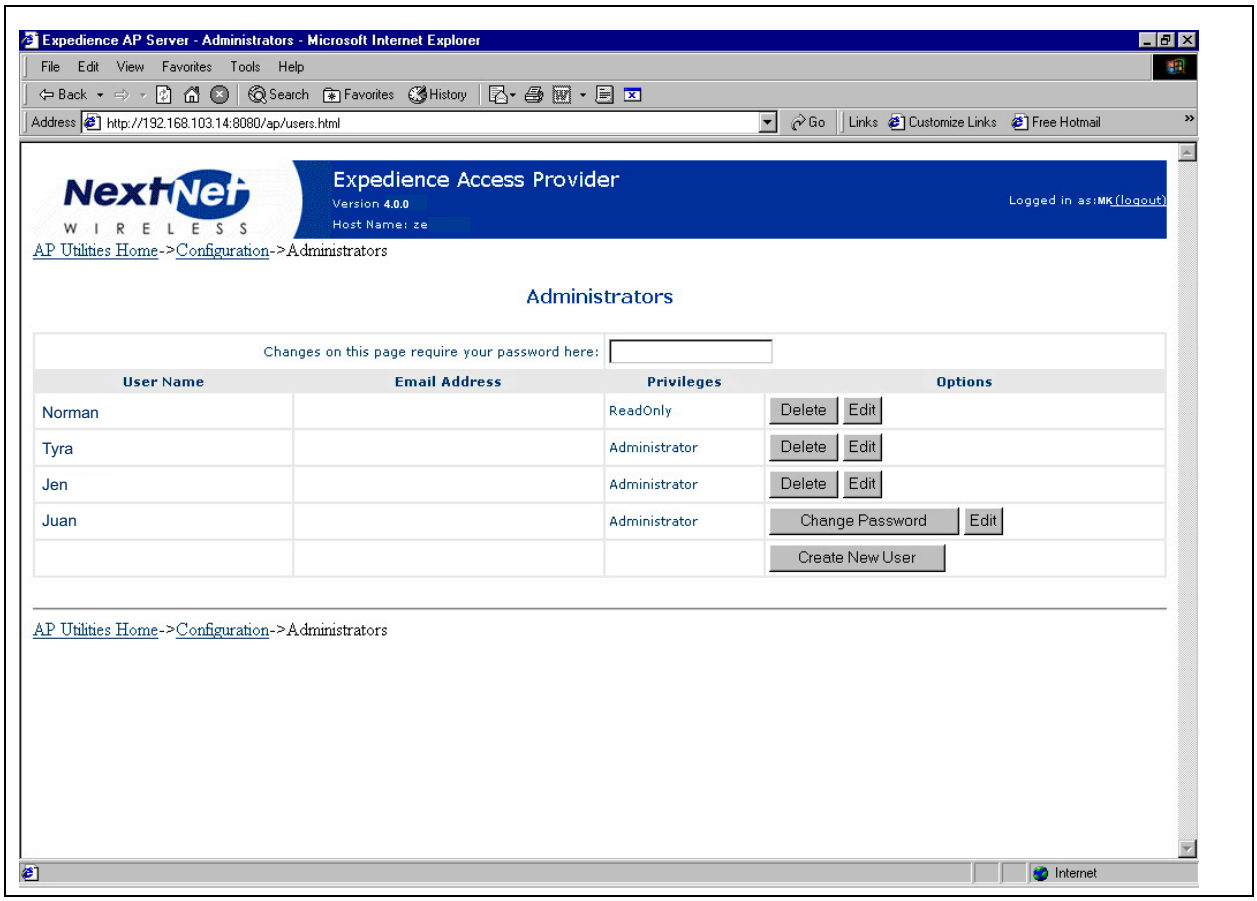


**4** In the **Changes on this page require your password here:** field, type your password.

**5** Click **Create New User**. The New User page opens.

**Figure 3.5 New User page**

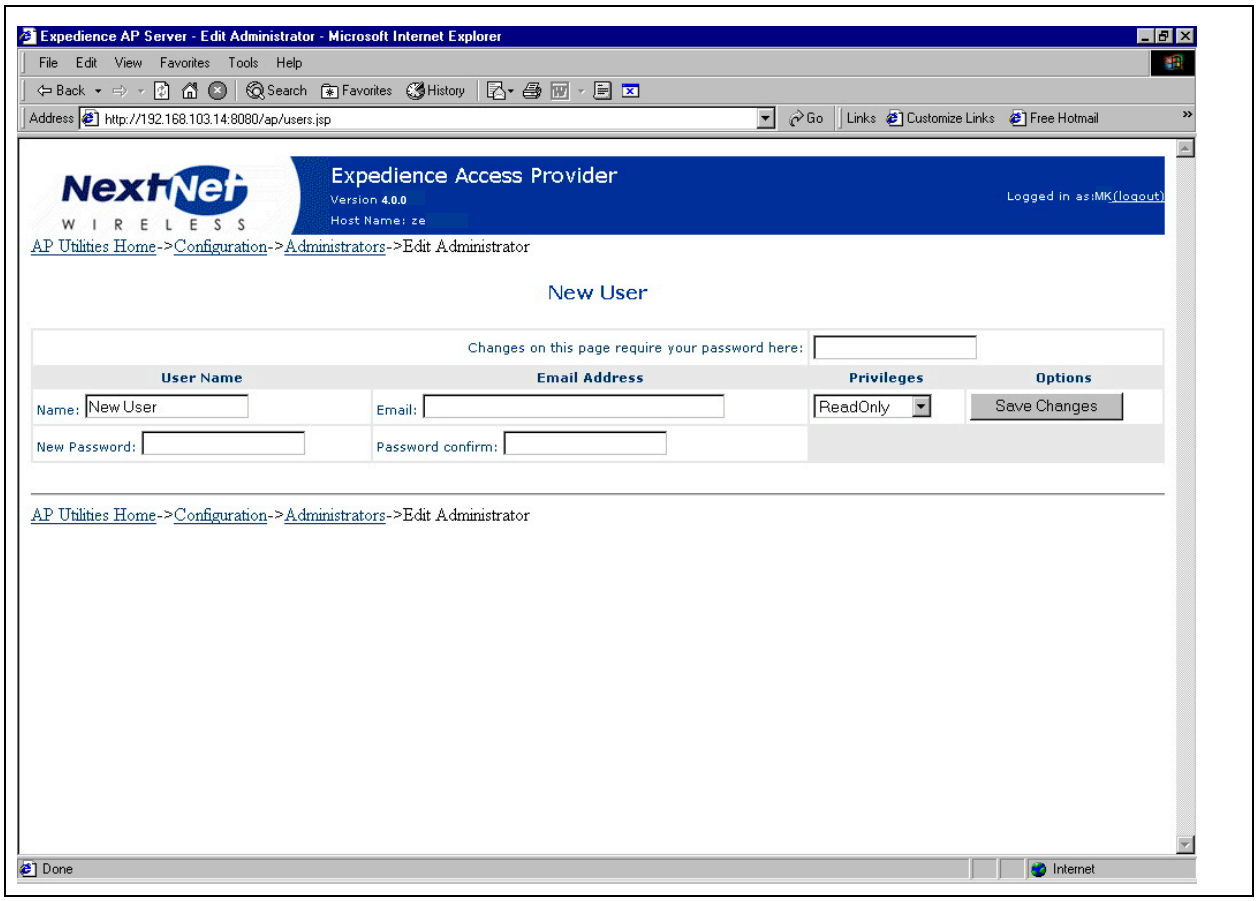


**6** In the **Changes on this page require your password here:** field, type your password.

**7** Complete the fields on the page, then click **Save Changes**.

# Defining zone names

To define zone names:

1. From the AP server's home page, click **Configure**.
2. From the Configure page, click the **Base Station Configuration** link.

**Figure 3.6 Base Station Attributes page**

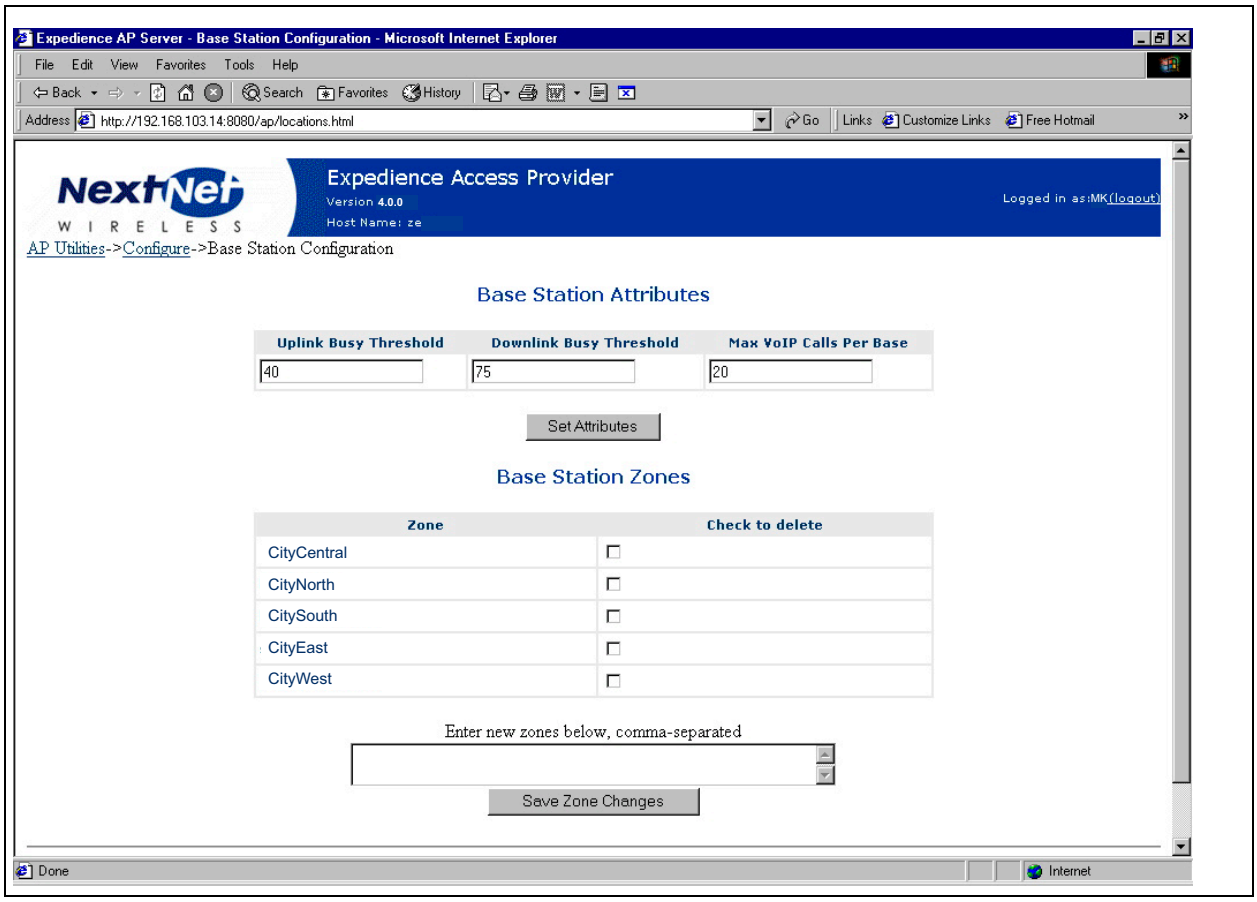


3. In the **Enter new zones below, comma separated** field, type the names of base station zones. Use commas to separate names.
4. For load balancing purposes, you can enter limits on the amount of traffic that a base station can handle on both the uplink and downlink. If a CPE tries to register with a base station when either of the limits are met, the CPE will receive a notice that it should try to register with another, less busy base station. If no such base station is available, the CPE registers with the first base station.
   - To specify the limit of uplink traffic that a base station can handle before the base stations indicates to registering CPEs to look for another base station, in the **Uplink Base Threshold** field, type the limit.
   - To specify the limit of downlink traffic that a base station can handle before the base station indicates to registering CPEs to look for another base station, in the **Downlink Base Threshold** field, type the limit.
5. To specify the maximum number of VoIP calls that a base station can handle, in the **Max VoIP calls per Base** field, type the limit.
6. Click **Save Zone Changes**. The new zone names appear in the Zone column.

### Registering with the AP server after Zones defined

After you define zones, the base stations must re-register with the AP server so that the AP server recognizes the base station as having a correct zone.

To re-register the base station with the AP server:

1. Establish a terminal session with the base station.
   a. From the Base Station Properties page (see Figure 3.11), click on the IP address of the base station.
   b. A terminal session starts, where you can log in to the NNOS.
2. To assign the base station to zone, use the NNOS command "set system location". This generates a base station registration record.
3. To save the settings on the base station, type **write**. The change is written to Flash memory on the base station.
4. Close the terminal session.
5. To verify that the base station's zone name is correct, refresh the web browser.

## Defining ISPs

To define ISPs:

1. From the AP server's home page, click **Configure**.
2. On the Configure page, click the **ISP Management** link.

**Figure 3.7 ISP Management page**

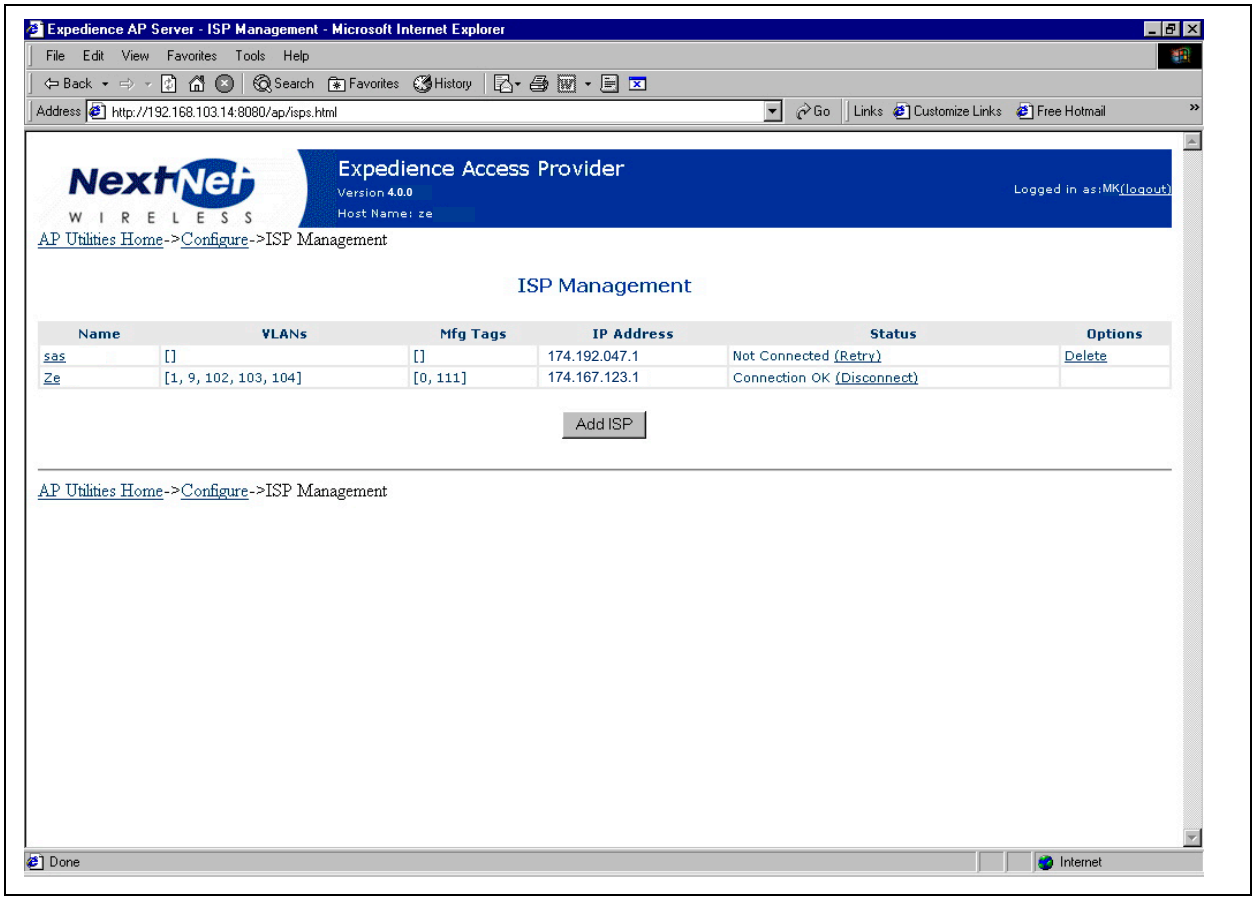

**3** To add a new ISP, click the **Add ISP** button.The Create new ISP page opens.

**Figure 3.8 Create new ISP page**

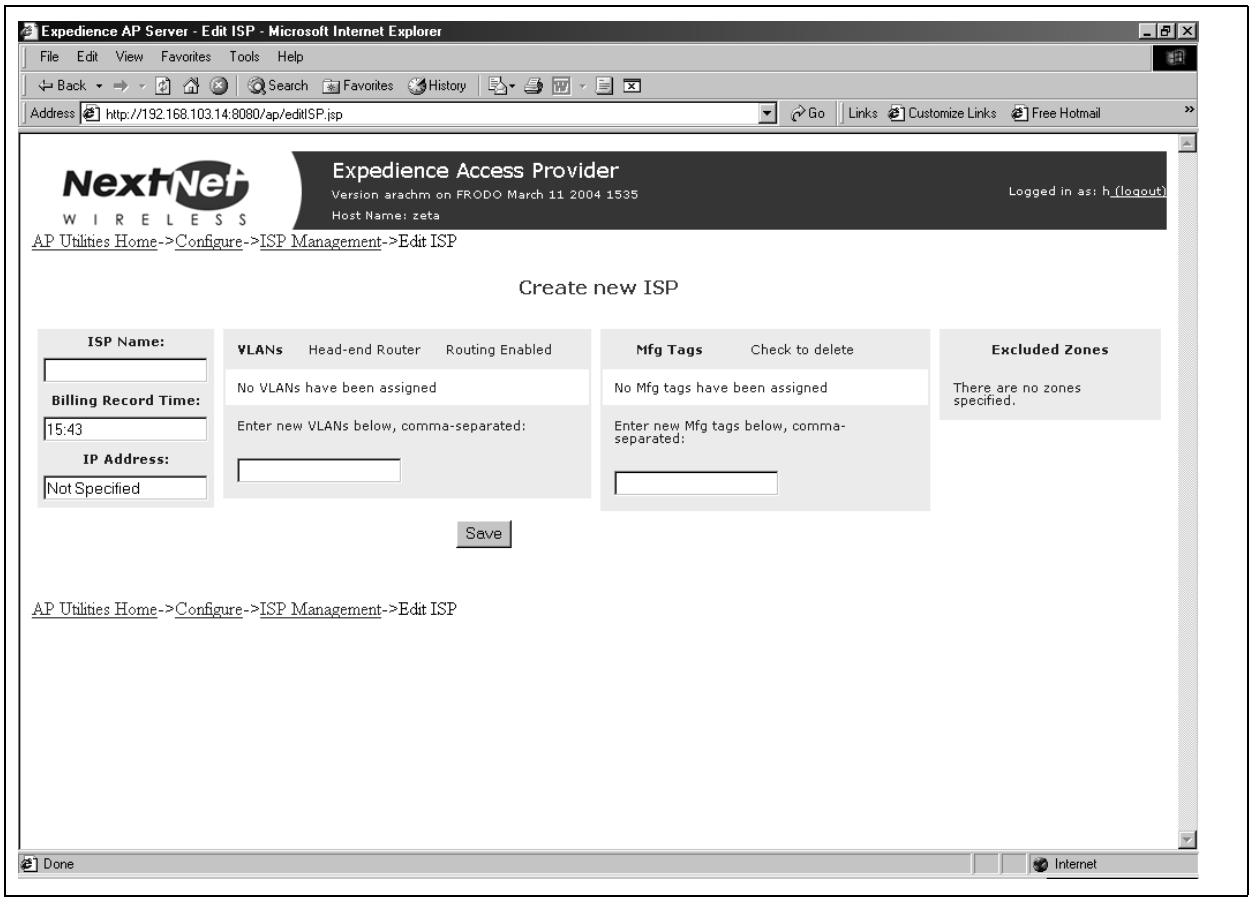


Table 3.1 describes the fields on the Create new ISP page that access providers must complete to add ISPs.

**Table 3.1 Create new ISP page**

| Field | Description |
|---|---|
| ISP Name | A name for the ISP |
| Billing Record Time | The time of day when the provisioning server is polled for billing information. This information includes the number of CPEs that are assigned to a service level agreement. |
| IP address | IP address of the ISP provisioning server |
| VLANs | ID numbers of the VLANs assigned to the ISP |
| Mfg Tags | An embedded number on the CPE that determines which Internet Service Provider (ISP) owns the CPE device |

# Changing ISP information

To change the information about the ISP:

**1** From the ISP Management page, click the link of the name of the ISP whose information you want to change.

**Figure 3.9 ISP details page**

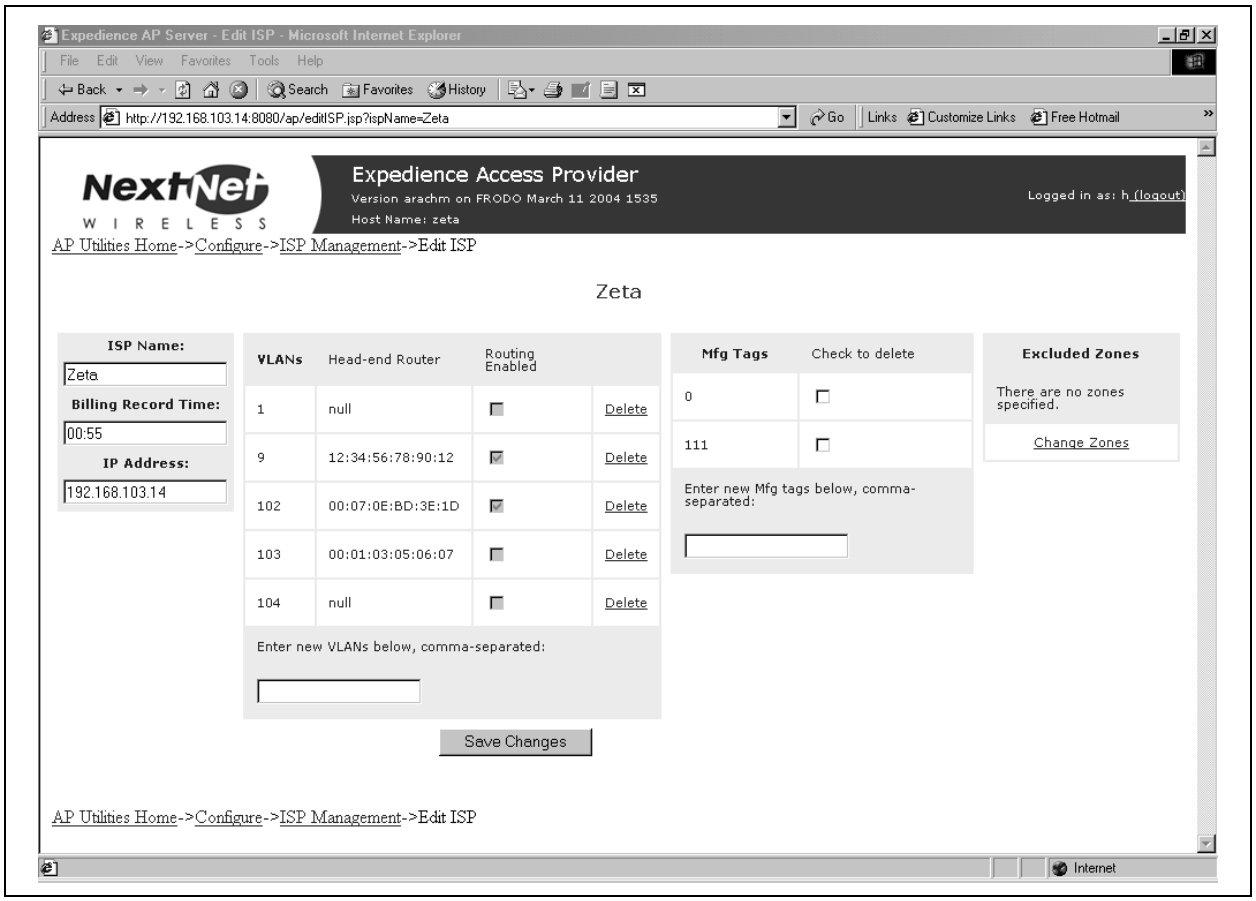


**2** Alter the fields on the page as desired. Click **Save Changes**.

# Monitoring ISPs and base stations

Using the AP server, you can view information about the status of ISPs and base stations that are part of the network access provider network.

To view information about ISPs and base stations:

1. From the AP server home page, click **Monitor**. The Monitor ISPs - Base Stations page opens.

**Figure 3.10 Monitor ISPs- Base Stations page**

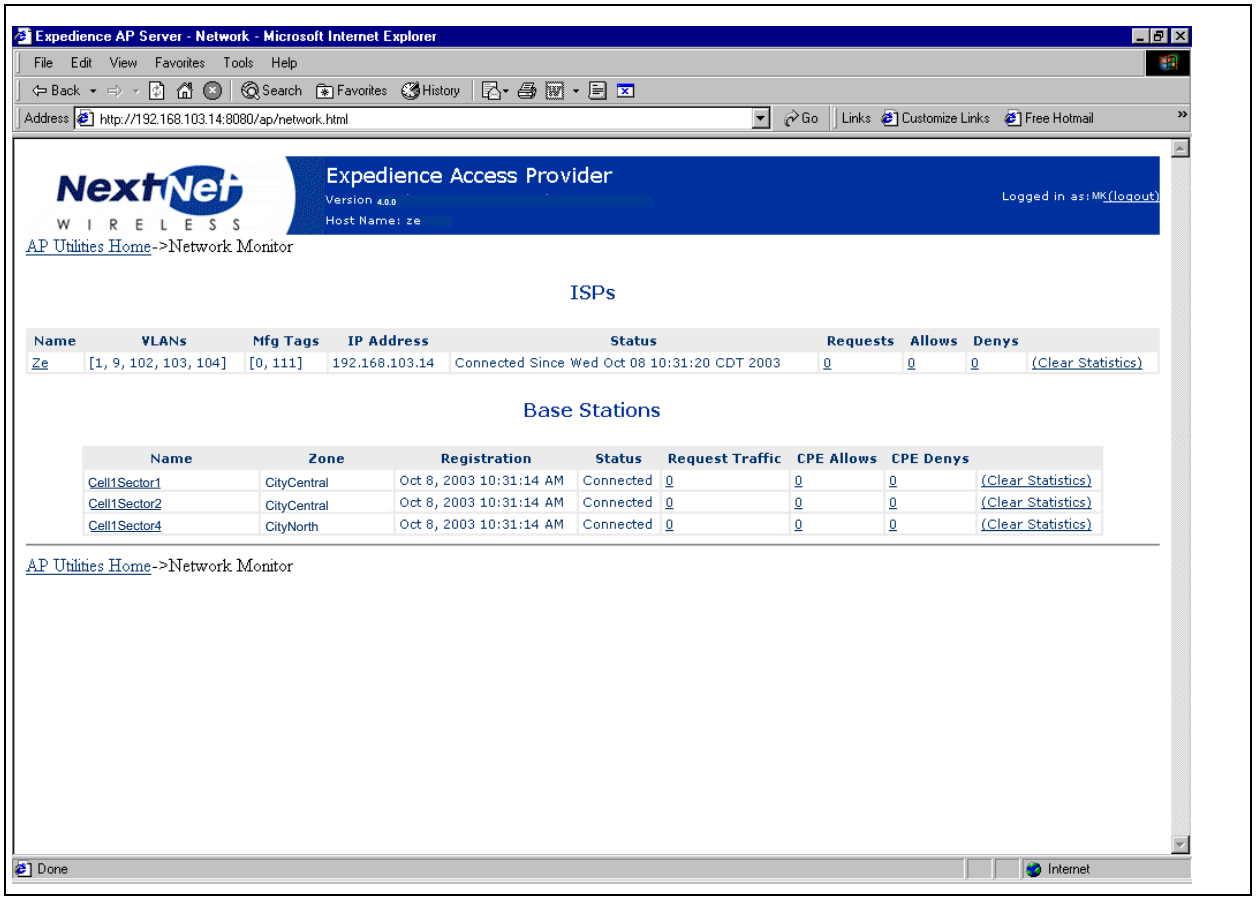

2 To start a terminal session with the base station, and change the base station's parameters using the NextNet Operating System (NNOS), click the name of the base station.The Base Station Properties page opens.

**Figure 3.11 Base Station Properties page**

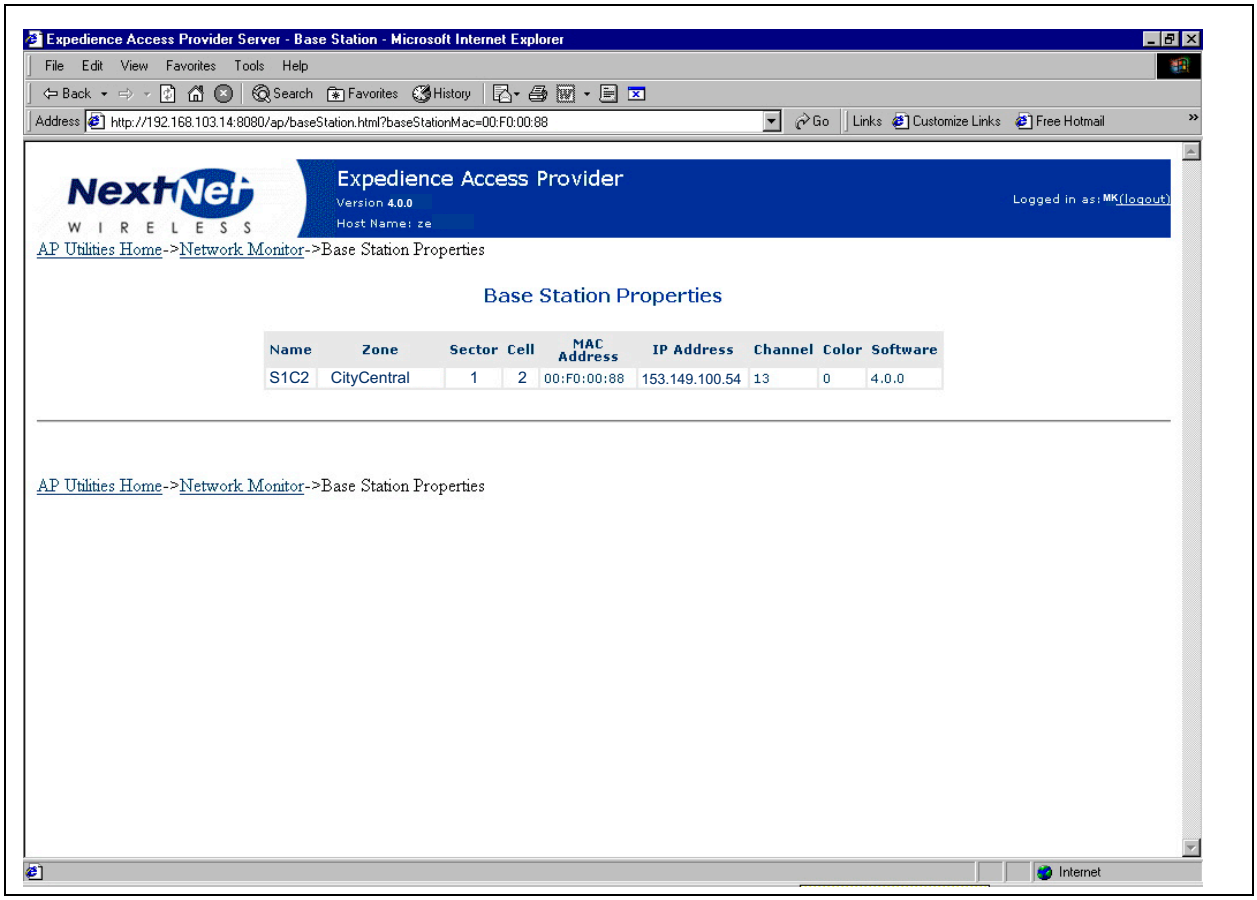


3 Click the IP address. A terminal session starts with the base station.

For more information about changing NNOS parameters on base stations, refer to the guide "Using the NextNet Operating System (NNOS), Version 2."

CHAPTER

# 4

# CONFIGURING A STANDBY AP SERVER

## Chapter overview

This chapter describes how to configure a standby AP server. The network will use the standby server if the primary server becomes unavailable.

## Standby AP server overview

The standby AP server can be put into service if the primary AP server is not available.

---

**Note:** Make sure that the primary and secondary server are not running at the same time. Also, make sure that the server on which shared AP configuration files reside is not powered off while either the primary or secondary server is running.

---

During AP server outage, subscriber data traffic is passed from CPEs and VLANs.

The elements of the standby AP server solution are:

- Primary AP server
- Secondary AP server
- Shared AP server configuration files

To maintain overall network integrity, configure the primary and secondary AP server with identical information, including the ISP ID assignments and VLAN assignments.

## Configuring the base station with standby AP server information

To configure the base station so it can use a standby AP server:

**1** Set the address of the primary and secondary server:

```
set aaa server address p.p.p.p,s.s.s.s
```

where:

**p.p.p.p** is the address of the primary AP server.

**s.s.s.s** is the IP address of the secondary AP server.

2 To save the changes to Flash memory, type the following:

```
write
```

3 To make sure the setting is correct, type:

```
show aaa
```

The following information appears:

aaa authority => remote

aaa cache => enabled

aaa port => 12541

aaa server address => 000.111.222.333 999.888.777.666

---

**Note:** 000.111.222.333 999.888.777.666 represent the IP addresses of the primary and secondary AP server respectively.

---

aaa state => enabled

## Setting up common configuration file and directory

This section describes how to set up a common configuration directory on a shared network drive.

After the AP server software is in installed, the following directories exist:

- NextNetHome
- NextNetConfigFolder

The NextNetConfigFolder contains the following configuration files which need to be shared between the primary and secondary AP servers.

**Figure 4.1 Configuration files to share between primary and secondary AP servers**

| File | Description |
|---|---|
| nextnet.properties | Specifies application parameters and the location of billing record folder |
| ap_logging.properties | Specifies the location of audit logs and application logs. Also lists logging parameters |
| users.xml | A list of user names |
| isps.xml | A list of ISPs |
| zones.xml | A list of zone names |

Create a shared directory on a server that stores these files. This shared directory can reside on either the primary or secondary server, if desired.

To create a shared directory:

1 Create the shared directory on the chosen machine:

```
\\ConfigServer\nn\config
```

2 Create a user called **TomcatServiceUser**. Set permissions on the shared directory to grant all privileges to the user.

3 On both the primary and secondary servers, set up the same user name:

```
TomcatServiceUser
```

This user ID is used to run the Tomcat service. The ID must have permission from both primary and secondary AP servers to access the shared directory on the ConfigServer.

This user should be a member of the group **`users`**. The user name and password must match the user account and password on the ConfigServer.

4. Install the AP server using the standard installation program. When the installation program prompts you:
   a. Place the NextNetHomedirectory on a local drive.
   b. Specify that the NextNetConfigFolder resides on the remote share.
5. On the primary and secondary servers, specify that the Tomcat service logs on as TomcatServiceUser:
   a. From the **Start** menu, select **Settings**, **Control Panel**, **Administrative Tools**. From the list of items that appears, select **Services**. The Services window opens.
   b. Double click on the Tomcat service. A Properties window for the service opens.
   c. Click the **Log On** tab.
   d. In the **This Account:** field, type the account name. In the **Password:** and **Confirm Password:** fields, type the password of the user account.
6. On the primary AP server, specify the startup type as **Automatic**.
7. On the secondary AP server specify the startup type as **Manual**.
8. Click on the **General** tab, and specify the following:
   a. For the primary AP server, from the **Startup type** drop down list box, select **Automatic**.
   b. For the secondary AP server, from **Startup type** the drop down list box, select **Manual**.

## Testing the installation

To test the installation:

1. From a command prompt, type:

   ```
   net start Tomcat
   ```

   If the service starts correctly, the Administrative Tools/Event Viewer shows that the service started.
2. Reboot the AP server. Without being logged on, you should be able to browse to the AP web application from another machine.

## Location of audit files and log files

Directories within the NextNetConfigFolder directory contain the audit logs and application logs. If you configured a shared space on a network directory for the primary and secondary AP server, the log files will be stored in the shared directory named NextNetConfigFolder.

If you have turned on the feature than enables debugging information to be written to a file, note that the performance of the AP server might degrade, as the server might be saving a lot of information to a network drive.

If desired, you can configure a different location where the files can be stored, such as C:/nn/logs.

## Switching from the primary AP server to the secondary AP server

To switch from the primary AP server to the secondary AP server:

1. Stop the primary AP server. To do so, from a command prompt on the primary AP server, type:

   ```
   net stop Tomcat
   ```

2. Start the secondary AP server. To do so, from a command prompt on the secondary AP server, type:

   ```
   net start Tomcat
   ```

After the primary server is stopped, each base station automatically detects the loss of the primary connection. The base station then attempts to connect with the secondary AP server.

The secondary server connects to the ISP provisioning servers. Since this connection overrides any previous connection with the provisioning servers, you must stop the primary AP server before starting the secondary AP server.

CHAPTER

# 5

# CONFIGURING BASE STATIONS

## Chapter overview

This chapter describes how to configure base stations. It describes:

- How to configure the base station so you can communicate with the base station using a term connection, an SNMP connection, a web connection, and a Telnet connection
- The operating system parameters to configure before you deploy base stations
- How to set up a system component (called an "authority") that grants CPEs access to your network

## Before you begin

To configure base stations before you deploy them on towers or buildings, you must first supply power to the base station, and connect the base station to a PC using the serial cable/ serial connection. To perform these tasks:

1. Place an RF 50 ohm load or at least a 10dB RF attenuator on the RF connector. The load or attenuator must be capable of 10 watts of dissipation.
2. Connect the base station to the TVS module by plugging the provided cable into the left-most connector on the bottom of the base station. Then, plug the TVS module into a power source.
3. Use the serial interface cable to connect your computer to the base station.
4. On your computer, set up terminal emulation access to the base station, as described in the section "Setting up terminal emulation access" on page 5-32 in this guide.
5. If you have not already done so, start a terminal emulation session with the base station you want to configure and log on to NNOS. (If you are using a Windows operating system, you may want to use the Hyperterminal application to open the connection defined in step 4.)
6. Configure the base station as described in the following sections of this chapter:
   - "Setting base station configuration parameters" on page 5-37
   - "Recommended parameter changes" on page 5-42
   - "Setting up Syslog" on page 5-43
   - "Configuring the authority that grants network access to CPEs" on page 5-44
   - "Configuring the time signal used by base stations" on page 5-46

# Setting up connection methods used to configure base stations

The Expedience system allows you to connect to a base station using many methods:

- Terminal emulation over a serial line
- Telnet
- Web server
- SNMP server

Before you can use a particular method to connect to the base station, you must configure its connection.

To configure the base station initially, you will most likely use a serial connection and a terminal emulation session. Terminal emulation allows access through a direct RS-232 connection from a personal computer to the base station.

## Setting up terminal emulation access

The terminal emulation connection is a physical RS-232 cable connection, between the base station and a PC. Once the connection is set up, you can use a program—such as Hyperterminal under the Windows operating system—to configure and communicate with the base station.

### Terminal emulation connection settings

To set up a terminal emulation connection, use these settings:

- 19.2k baud
- 8 data bits
- No parity
- 1 stop bit
- no flow control

## Setting up Telnet access

To set up your system to use Telnet to access a base station:

1. Using your Term connection, at the NNOS command prompt, issue the following command to enable Telnet:

   **`set telnet state enabled`**

2. If you want to change the default port on which the Telnet server listens:

   **`set telnet port`** {*portnumber*}

   The factory default is 23.

3 To set the IP address, or range of IP addresses, of the remote computers that are allowed to use Telnet to access the base station:

**`set telnet remote`** {*IPaddress* | *IPaddress mask*}

where:

*IPaddress* is the IP address of the computer that is allowed to use Telnet to access the base station.

*IPaddress mask* is a mask for a range IP addresses that are allowed to use Telnet to access the base station.

4 If you want to change the Telnet timeout from the factory default of 5 minutes:

**`set telnet timeout`** {*time*}

where {*time*} is the time, in seconds, that the Telnet session is allowed to sit idle before the session ends.

5 Before you can telnet to the base station, you need to set the base station's IP address.

a To set the base station's IP address, at a NNOS prompt, type:

**`set IP address`** {*IPaddress*}

where:

*IPaddress* is the IP address of the base station.

b To determine the base station's address, use Terminal emulation over a serial line connection to the base station. At a term connection's NNOS prompt:

**`show IP address`**

Remember the base station's IP address. You will need it later if you want to use Telnet a web browser, or SNMP session to configure or monitor the base station.

---

**Note:** If you have assigned names to your base stations, you can also use the "show name" command to determine the base station's name. Then, you can telnet to the base station using its name. For further information, refer to the section "Recommended parameter changes" on page 5-42 in this guide.

---

6 For changed settings to take effect, you must write the changes to Flash memory and then restart the base station.

a At the NNOS command prompt, type **`write`**.

b At the next NNOS command prompt, type **`reboot`**.

## Setting up web access

This section describes how to set up your base station for web access.

---

**Note:** To determine how parameters are currently configured, you can issue a "show" command for the parameter you want to check. For example, a "show web state" command will tell you if the base station already has the web server enabled. Most of the system's default settings for parameters will help ensure your base station is ready for web access when the factory ships the base station.

---

To set up your system for web access:

1. Using your Term connection, at the NNOS command prompt, issue the following command to enable the web server:

   `set web state enabled`

2. To change the default web port number:

   `set web port` {*port number*}

   The default port number is 80.

3. To specify the IP address of the remote computer or computers allowed to access the web server on the Expedience device, specify a mask appropriate to your network. Type the following command:

   `set web remote` {*IPaddress* | *IPaddress mask*}

   where:

   *IPaddress* is the address of the computer that is allowed to access the web server on the base station.

   *IPaddress mask* is a mask for a range of all IP addresses that are allowed to access the base station web server.

4. If you changed the settings for the **set web state** or the **set web port** parameters, write your changes to memory and then restart the base station.

   a At the NNOS command prompt, type `write`.

   b At the next NNOS command prompt, type `reboot`.

5. Open an Internet browser. In the address field, access the web server on the base station by typing the IP address of the base station.

6. A user name and password window appears.

   a If you want to be able to change configuration parameters, type the super user password.

   b If you only want to be able to view configuration parameters, type the user password.

   c If you don't know the password, contact your system administrator.

## Setting up SNMP access

This section describes how to set up your base station for SNMP access.

---

**Note:** To determine how parameters are currently configured, issue a "show" command for the parameter you want to check. For example, a "show snmp state" command will tell you if the base station already has the SNMP agent enabled. Most of the system's default settings for parameters will help ensure your base station is ready for SNMP access when the factory ships the base station.

---

To setup your system for SNMP access:

1. Using a Term or telnet connection, at the NNOS command prompt, issue the following command to enable SNMP:

   **`set snmp state enabled`**

2. To specify the IP address of the remote computer or computers allowed to access the SNMP server on the base station, specify a mask appropriate to your network. Type the following command:

   **`set snmp remote`** {*IPaddress* | *IPaddress mask*}

   where:

   *IPaddress* is the address of the remote machine that is allowed to access the SNMP server.

   *IPaddress mask* is a mask for a range of all IP addresses that are allowed to access the base station's SNMP server.

3. If you want to use SNMP traps:

   **`set snmp traps enabled`**

4. To specify the IP address of the SNMP trap server on the network management workstation:

   **`set snmp trap server`** {*IPaddress*}

   where {*IPaddress*} is the IP address of the machine to receive SNMP traps.

5. Specify the trap level for the functions whose traps can be reported. To specify the level of the SNMP trap messages that are sent to the trap server:

   **`set snmp`** {*function*} **`traplevel`** {*variable*}

   where:

   {*function*} is the feature whose trap level you want to set. Functions you can specify include **`airlink`**, **`config`**, **`nnmgr`**, **`reg mgr`**, **`relay`**, and **`stack`**.

   {*variable*} is the trap level, with a value of **`0`**, **`3`**, **`4`**, **`5`**, or **`7`**.

   For more information, refer to the guide "Using the NextNet Operating System (NNOS)."

6 Specify the SNMP community name. A community is a logical relationship between an SNMP agent and one or more SNMP managers. The community has a name, and all members of a community have the same access privileges.

   To specify the community that will have read privileges:

   **`set snmp read community`** {*name*}

   To specify the community that will have write privileges:

   **`set snmp write community`** {*name*}

   For both parameters, {*name*} specifies the name of the community.

7 To allow the ability to configure parameters through SNMP access:

   **`set snmp access enabled`**

8 If you changed the settings for the **set snmp state**, write your changes to Flash memory and then restart the base station.

   a At the NNOS command prompt, type **`write`**.

   b At the next NNOS command prompt, type **`reboot`**.

## Configuring SNMPc 5.0 for use with Expedience base stations

If you are using the network management application SNMPc 5.0 from Castle Rock, change the default community name of base stations.

1 Open the SNMPc 5.0 application and select a base station.

2 Within the application, use the set community command to set the base station's community name to "public".

   **Note:** The default community name is netman.

3 Repeat step 2 for each base station you want to manage.

# Setting base station configuration parameters

This section describes configuration parameters to set for proper base station operation.

You can use terminal emulation, Telnet, the web interface, or an SNMP session to configure the parameters on the base station.Before you can use these methods, make sure the connection is set up. For further information, refer to the section "Setting up connection methods used to configure base stations" on page 5-32 in this guide.

To set up the base station:

**1** Set the following parameters, in the order that follows:

- set airlink channel, as described on page 5-37 in this guide.
- set airlink downlink power, as described on page 5-38 in this guide.
- set airlink downlink bias, as described on page 5-39 in this guide.
- set vlan legacy id, as described on page 5-43 in this guide.
- set vlan mgmt id, as described on page 5-43 in this guide.
- set airlink state, as described on page 5-42 in this guide.

For more information about these configuration parameters, as well as a full list of configuration parameters, refer to the guide "Using the NextNet Operating System."

**2** After setting the parameters, use the write command to write the settings into the flash, non-volatile memory.

**3** For changes to take effect, perform **one** of the following:

- Re-boot the base station

  —OR—

- Power down the base station, and then re-power it.

## set airlink channel

Set this configuration parameter to the frequency channel on which to run the airlink. For an illustration of the channels that are supported in the various frequency ranges, refer to Appendix B.

**Example:** `set airlink channel 15`

# set airlink downlink power

This parameter specifies the base station's transmit power level.

The power levels you can specify depend on the type of base station you are using: a 2 watt base station, or a 5 watt base station.

## 2 watt base station

Specify a power value from 10 to 31.

The maximum system power level is 10, which specifies +33 dBm (2 watts). The other power levels are measured in 1 dB steps from the maximum.

**Example:** `set airlink downlink power 10`

**Table 5.1 Transmit power levels**

| Power value | Power level |
|---|---|
| 10 | +33 dBm = 2.0 watts |
| .<br>. | |
| 13 | +30 dBm = 1.0 watt |
| .<br>. | |
| 16 | +27 dBm = 500 milliwatts |
| .<br>. | |
| 23 | +20 dBm = 100 milliwatts |
| .<br>. | |
| 31 | +12 dBm = 15.8 milliwatts |

### 5 watt base station

Specify a power value from 6 to 31. The maximum system power level is 6, which specifies +37 dBm (5 watts) at the RF connector. The other power levels are measured in 1 dB steps from the maximum.

To operate the base station at the 5 watt level, you must install a supplied channel filter.

**Example:** `set airlink downlink power 10`

**Table 5.2 Transmit power levels**

| Power value | Power level |
|---|---|
| 6 | +37 dBm = 5 watts |
| .<br>. | |
| 10 | +33 dBm = 2.0 watts |
| .<br>. | |
| 13 | +30 dBm = 1.0 watt |
| .<br>. | |
| 16 | +27 dBm = 500 milliwatts |
| .<br>. | |
| 23 | +20 dBm = 100 milliwatts |
| .<br>. | |
| 31 | +12 dBm = 15.8 milliwatts |

## set airlink downlink bias

This parameter specifies the portion of airtime (slots) available for use on the downlink relative to the airtime for the uplink. There are always 6 slots available for the uplink.

The higher the bias, the more bandwidth is available for the downlink, due to more time allocated to the downlink.

**Example:** `set airlink downlink bias 2`

You must specify the same downlink bias for all base stations in a cell. Likewise, all base stations within your system, regardless of the cell they are in, must have the same downlink bias.

---

**Note:** If you are using both 4-QAM only RSUs and AMOD RSUs, do NOT use bias 1.

---

Table 5.3 describes the downlink rates for various modulation methods.

**Table 5.3 Downlink rate based on modulation method**

| | 4-QAM | 16-QAM | 64-QAM | 16-QAM lite |
|---|---|---|---|---|
| Bias | Downlink rate | Downlink rate | Downlink rate | Downlink rate |
| 0 | 1,337,358 | 2,100,580 | 2,863,803 | 3,627,025 |
| 1 | 1,719,413 | 2,975,037 | 4,230,661 | 5,486,284 |
| 2 | 2,127,308 | 3,906,987 | 5,686,667 | 7,466,347 |
| 3 | 2,294,515 | 4,288,741 | 6,282,967 | --- |
| 4 | 2,424,466 | 4,587,929 | 6,750,392 | --- |
| 5 | 2,530,766 | 4,828,640 | 7,126,514 | --- |

Table 5.4 describes the uplink data rate when QPSK is the modulation method.

**Table 5.4 Uplink data rate for 4-QAM modulation method**

| Bias | Uplink all | 1 slot | 2 slot |
|---|---|---|---|
| 0 | 1,314,152 | 210,264 | 431,545 |
| 1 | 1,080,996 | 172,959 | 354,981 |
| 2 | 835,728 | 133,716 | 274,439 |
| 3 | 735,804 | 117,729 | 241,625 |
| 4 | 657,076 | 105,132 | 215,772 |
| 5 | 593,488 | 94,958 | 194,891 |

Table 5.5 describes the uplink data rate when 16-QAM is the modulation method.

**Table 5.5 Uplink data rate for 16-QAM modulation method**

| Bias | Uplink all | 1 slot | 2 slot |
|---|---|---|---|
| 0 | 2,867,241 | 438,051 | 926,489 |
| 1 | 2,358,537 | 360,332 | 762,112 |
| 2 | 1,823,407 | 278,576 | 589,196 |
| 3 | 1,605,391 | 245,268 | 518,749 |
| 4 | 1,433,620 | 219,025 | 463,245 |
| 5 | 1,294,883 | 197,829 | 418,415 |

Table 5.6 describes the uplink data rate when 64-QAM is the modulation method.

**Table 5.6 Uplink data rate for 64-QAM modulation method**

| Bias | Uplink all | 1 slot | 2 slot |
|---|---|---|---|
| 0 | 3,942,456 | 584,068 | 1,260,876 |
| 1 | 3,242,988 | 480,443 | 1,037,172 |
| 2 | 2,507,184 | 371,435 | 801,847 |
| 3 | 2,207,412 | 327,024 | 705,974 |
| 4 | 1,971,228 | 292,034 | 630,438 |
| 5 | 1,780,464 | 263,772 | 569,428 |

Table 5.7 describes the uplink data rate when 16 QAM lite is the modulation method

**Table 5.7 Uplink data rate for 16-QAM lite modulation method**

| Bias | Uplink all | 1 slot | 2 slot |
|---|---|---|---|
| 0 | 5,256,608 | 750,944 | 1,661,571 |
| 1 | 4,323,964 | 617,712 | 1,366,777 |
| 2 | 3,342,912 | 477,559 | 1,056,668 |
| 3 | --- | --- | --- |
| 4 | --- | --- | --- |
| 5 | --- | --- | --- |

# set system location

This parameter defines the zone to which the base station belongs.

During the design of the network, the access provider defines zones of coverage for the network. For example, an access provider can divide a metropolitan areas into North, South, East, West, and Central zones.

In the North zone, the network access provider decides to install three base station cells. All base stations in this zone—regardless of their cell assignment—have the same zone name of North.

The network access provider then assigns base stations to a specific zone by using the set system location command.

```
Example:  set system location North
```

## set system name

The parameter specifies the name of the base station.

For example, the network access provider has three base station cells in the zone called North. All base stations in this zone—regardless of their cell assignment—have the same zone name: North.

Using the system name, the network access provider provides a name for each base station. This system name reflects where the base station is installed in the North zone.

To continue the example, a base station assigned the zone name of "North" is to be installed near the intersection of 7th street and Randolph avenue. The base station is given the name sevenandrandolphbase2. This name indicates that this is the second base station installed near the street. Another base station (also in the North zone) is to be installed near the intersection of Carmody drive and 45th avenue. It is given the name carmodyand45base1.

**Example:** `set system name SevenandRandolphBase2`

## set airlink state

This parameter enables the airlink.

After you specify the set airlink channel number, set airlink downlink power, and set downlink bias parameters, set the airlink state to enabled, so changes can take effect.

**Example:** `set airlink state enabled`

You can take the base station off the air by disabling the airlink.

# Recommended parameter changes

Before deploying a base station, it is recommended that you assign the base station a cell name and a sector name.

## set system cell

This parameter specifies the cell name in which the base station is installed.

**Example:** `set system cell RiverBendRoad`

## set system sector

This parameter specifies the sector in which the base station is installed.

**Example:** `set system sector north`

## set DHCP state

If you want to use a DHCP server to assign IP addresses to base stations, set this parameter to enabled.

**Example:** `set DHCP state enabled`

## Setting legacy and management VLAN IDs

When the base station is shipped from the factory, the identification numbers for the legacy VLAN and for the management VLAN are both set to 1.

If you or your ISPs use only CPEs that run Version 2.x software code or later, you do not need to change the default id for either VLAN.

However, if you have some CPEs running version 1.x code, you need to set up a legacy VLAN with an identification number different from the management VLAN ID. The legacy VLAN then services all CPEs that run version 1.x software code.

### set vlan legacy id

This command specifies the identification number for all legacy CPEs—CPEs that run version 1.x software code. Make sure the legacy VLAN configuration setting is identical on all base stations in the network.

**Example:** `set vlan legacy id 4`

### set vlan mgmt id

This command specifies the identification of the management VLAN. The management VLAN is used for network management. It also handles authorization protocol messages. All base stations attach to the management VLAN. A network access provider must have one management VLAN. The VLAN identification number must be the same number on all base stations in the network.

**Example:** `set vlan mgmt id 1`

# Setting up Syslog

This section describes how to set up Syslog options. Syslog is a tool that records operational data, unusual system occurrences, system commands, and messages. To set up your system's Syslog options:

1. To enable Syslog, use a command line interface run over the network (such as telnet) or use a serial line connection to the base station.
2. If you have not already done so, log on to NNOS. At the NNOS command prompt, issue the following command to enable Syslog:

   `set syslog state enabled`
3. Specify the level for the functions whose syslog events can be reported. To specify the level of the messages:

   `set syslog` {*function*} `level` {*variable*}

   where:

   {*function*} is the feature whose level you want to set. Functions you can specify include `airlink`, `config`, `nnmgr`, `reg mgr`, and `relay`.

   {*variable*} is the level, with a value of `0`, `3`, `4`, `5`, or `7`.

   For further information about the functions and Syslog levels, refer to the guide "Using the NextNet Operating System (NNOS)."
4. To set the Syslog port number:

   `set syslog port 514`

5 Set the Syslog server to the address of the network management workstation

`set syslog server` {*IPaddress*}

where {*IPaddress*} is the address of the workstation that is running the Syslog application.

6 To verify the operation of Syslog, open the Syslog server, where you can view messages or create Syslog message reports.

# Configuring the authority that grants network access to CPEs

This section describes how to set up a system component (called an authority) that grants CPEs the ability to access the ISPs' VLANs.

Table 5.8 describes the methods the network can use to grant network access to CPEs.

**Table 5.8 Methods used to grant CPEs access to ISPs' VLANs**

| Type of authority | Description |
|---|---|
| Remote authority | The ISP's provisioning server resides on the ISP VLAN and is used to grant network access to CPEs.<br>When the base station is configured to use remote authority, the CPE's network access request travels to the base station. The base station then forwards the request to the network access provider's AP server. The AP server relays the request to the proper ISP and the provisioning server.<br>The provisioning server is checked to ensure the CPE is allowed to access the ISP's VLAN. If so, the provisioning server sends a record that grants access back to the base station. |
| Local authority | The base station grants network access to CPEs. When this type of authority is used, all CPEs are placed on the same VLAN, which is the legacy VLAN. |

**Note:** The AP server, which acts to relay CPE service requests to the proper ISP VLAN, is sometimes referred to as an AAA ("authentication authorization accounting" or "triple A") server.

## Using base station caching feature for re-registering CPEs

Network access providers can also set up the base station to grant access to CPEs that have already been granted permission to operate on the network. When a CPE re-registers, the base station uses the existing parameters stored on the base station, such as the CPE's VLAN assignment and the number of hosts the CPE is allowed to service. For more information on this feature, refer to "set aaa cache" in the guide "Using the NextNet Operating System (NNOS)."

## Remote authority: setting up the provisioning server to grant CPEs network access

Under remote authority the provisioning server grants CPEs network access. All requests for access are relayed to the appropriate ISP through the network access provider's AP server.

To set up remote authority:

1. Contact the appropriate ISP to make sure the provisioning server hardware and software are properly installed.
2. Add appropriate routes to the base station's routing table.

   Use the NNOS "route add" command to add a route (from the base station to the AP server), and a reverse route (from the AP server to the base station) to the base station's route table.

---

**Note:** Steps 3 through 6 help you configure the base station to use the AP server as a relay for CPE registration requests. The AP server forwards the registration requests to the appropriate provisioning server. To complete these steps, use Terminal emulation and a serial line connection to the base station. You can also use Telnet, SNMP, or web access if access for these connection methods is configured.

---

3. To specify the address of the AP server that receives records:

   **`set aaa server address`** {*IPaddress1*},{*IPaddress2*}

   where

   {*IPaddress1*} is the address of the workstation that runs the AP server.

   {*IPaddress2*} is the address of a redundant workstation that runs the AP server if the workstation identified by IPaddress1 goes down. Control returns to the workstation identified by IPaddress1 when the redundant workstation goes down.
4. To specify the port on which the AP server listens:

   **`set aaa port 12451`**
5. Configure the method the base station uses to grant network access to CPEs:

   **`set aaa authority remote`**

   where **`remote`** indicates the provisioning server (through the AP server relay) grants network access to CPEs that are attempting to connect to the network.
6. To activate the AP server feature:

   **`set aaa server enabled`**
7. To store the changes in Flash memory:

   **`write`**

## Local authority: setting up the base station to grant CPEs network access

If you establish local authority, the base station always grants CPEs network access. All CPEs are placed on the same VLAN, which is the legacy VLAN.

To set up local authority:

1. Disable the AAA server feature:

   **`set aaa state disabled`**

2. Configure the method the base station will use to grant network access to CPEs:

   **`set aaa authority local`**

   where **`local`** indicates the base station grants access to CPEs that want to connect to your network.

3. To store the changes in Flash memory:

   **`write`**

4. Reboot the base station. When the CPEs re-register with the base station, the base station places them on the legacy VLAN.

# Configuring the time signal used by base stations

Expedience base stations require a time synchronization signal in order to determine the proper timing for time division duplexing (TDD).

Because most Expedience system deployments use multiple base stations, at multiple cell sites, most service providers will configure their base stations to use the time synchronization signal generated by the Expedience system's global positioning system (GPS).

However, if your deployment includes only one base station or one cell site, you can disable the use of an external GPS. Your base station will then use a time signal generated by a base station for time synchronization.

The GPS supplied time signal is known as an external time signal, which is the default setting of the base station when shipped from the factory.

The base station generated time signal is known as an internal time signal.

## Configuring the GPS to supply the time signal

To use the GPS to supply the time signal to base stations:

1. Supply power to the entire system, as described in the section "Powering base stations" on page 6-61 in this guide.
2. Connect the GPS to a base station, as described in the section "Connecting the GPS equipment to a base station" on page 6-59 in this guide.
3. Connect all base stations in your cell to each other, in a daisy chain manner. For further information, refer to the section "Connecting the GPS equipment to a base station" on page 6-59 in this guide.
4. Configure the base station to use an external time synchronization signal:

   **`set airlink timing external`**

5. Enable the set airlink afc parameter. This parameter allows a base station to automatically frequency lock to the external pulse from the GPS, which is one pulse per second.

   **set airlink afc enabled**

6. Save changes in Flash memory by issuing the **write** command.
7. For changes to take effect, reboot or reset the base station's power. To reboot, type the following at the command prompt:

   **reboot**

## Configuring a base station to supply a time signal

There are two scenarios in which you might want to set up a base station to use internal time synchronization.

The first is a single base station at a site that is not part of a larger system with other sites. This base station may be set to use internal time synchronization.

The second scenario is a multiple base station site that is not part of a larger system with other sites. One of the base stations is set as a master base station. The master base station is set for internal time synchronization. It generates the 1-pulse-per-second (pps) for itself, and also outputs the 1 pps pulse for the other base stations. As such, you then set the other base stations to use external time synchronization.

To use a base-station generated time signal:

1. Connect all base stations in your cell to each other, in a daisy chain manner.
2. Supply power to the entire system, as described in the section,"Powering base stations" on page 6-61 in this guide.
3. Configure the single base station or the master base stations to use an internal time synchronization signal:

   **set airlink timing internal**

4. Disable the set airlink afc parameter. You must disable this parameter, which otherwise would allow a base station to automatically frequency lock to the external pulse from the GPS.

   **set airlink afc disabled**

5. Store your changes in Flash memory by issuing the **write** command.
6. For changes to take effect, reboot or reset the base station's power. To reboot, type the following at the command prompt:

   **reboot**

NextNet
WIRELESS

CHAPTER

# 6

# INSTALLING THE INTEGRAL BASE TRANSCEIVER STATION (I-BTS)

## Chapter overview

This chapter describes how to install the integral base transceiver station (I-BTS). The I-BTS enables you to install the base station and the antenna as one item, which could save tower rental costs. You can also install the base station and antenna separately, if desired.

This chapter describes:

- Components used to mount the base station on a building or tower
- Connecting the base station to the cell and to cell-site components

## Before you begin

Before you install a base station on a roof top or tower:

- It is recommended that you assign a name to the base station. For more information refer to Chapter 2, "Configuring base stations," in this guide.
- It is also a good idea to configure the base station.

# Cell wiring

Figure 6.1 shows how a cell, base stations, and ancillary equipment are wired together.

**Figure 6.1 Cell wiring diagram**

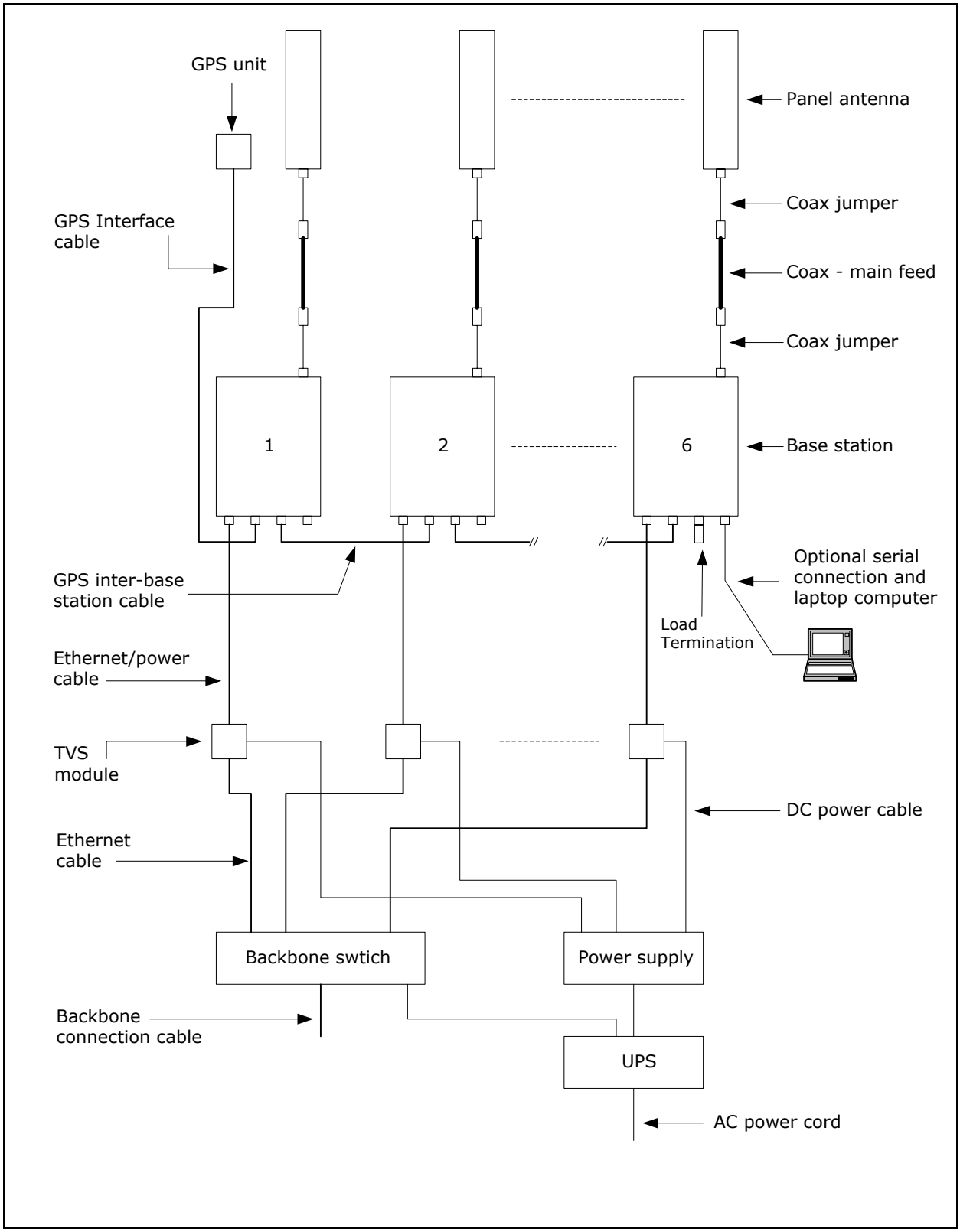

# Installation overview

If you plan to install the antenna and the base station as a single unit:

1. Attach the right angle connector of antenna cable to antenna and apply weatherproofing tape to the connector.
2. Attach the other end of the antenna cable to the base station and apply weatherproofing tape to the connector.
3. Attach the antenna mounting brackets to the I-BTS. Use the antenna bracket integral base kit (part number 123-0350-1002) to attach these brackets.
4. Attach the antenna to the mounting brackets.
5. Attach the straight end of the antenna cable to the BTS, attach the other end of the cable (the right angle end of the cable) to antenna.
6. Set the antenna's tilt.
7. Attach the pole mounting bracket to the back of the BTS.
8. Install the I-BTS to the tower, pole, or wall. Then, attach the GPS cables and Ethernet/power cable to the I-BTS.

These steps are explained in greater detail in the sections that follow.

# Antenna and bracket assembly for I-BTS

To attach the antenna mounting bracket to the I-BTS:

1. Attach the right angle connector of antenna cable to antenna. Apply weather proofing tape to the connector.
2. Attach the straight end of the antenna cable to the filter on the base station. Apply weather proofing tape to the connector.

**Figure 6.2 Attaching antenna cable to I-BTS**

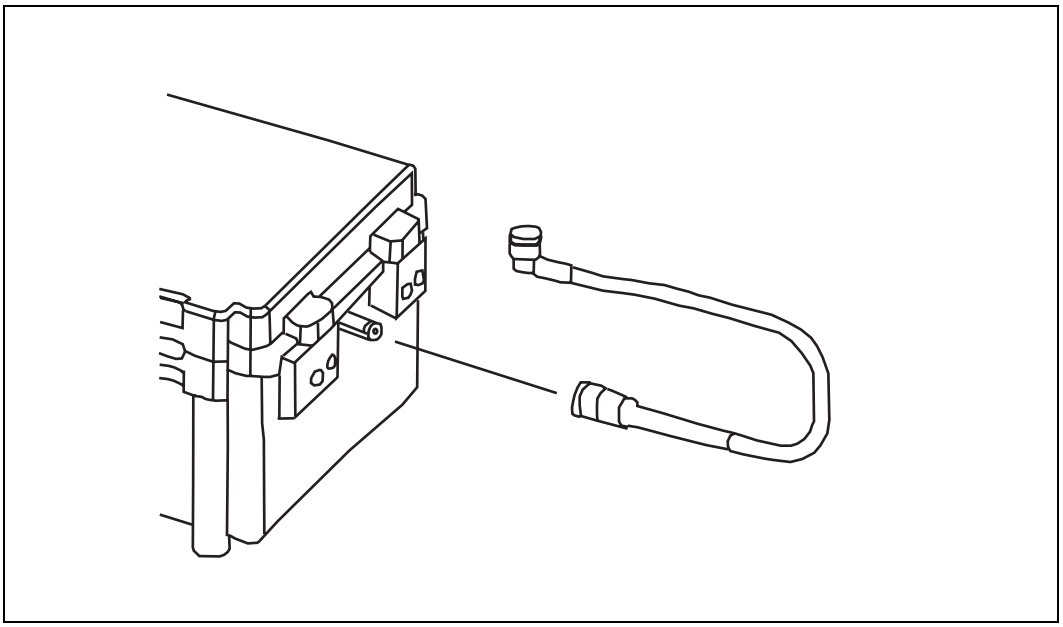

3. Attach the L-shaped brackets (MP2) to the upper left and right of the I-BTS (see Figure 6.2). You **must** attach these brackets first, so that your wrench can access the screws holding the bracket to the I-BTS.

You can tighten the bolts to 10 FT LBS.

**Figure 6.3 Attaching L-shaped brackets to I-BTS**

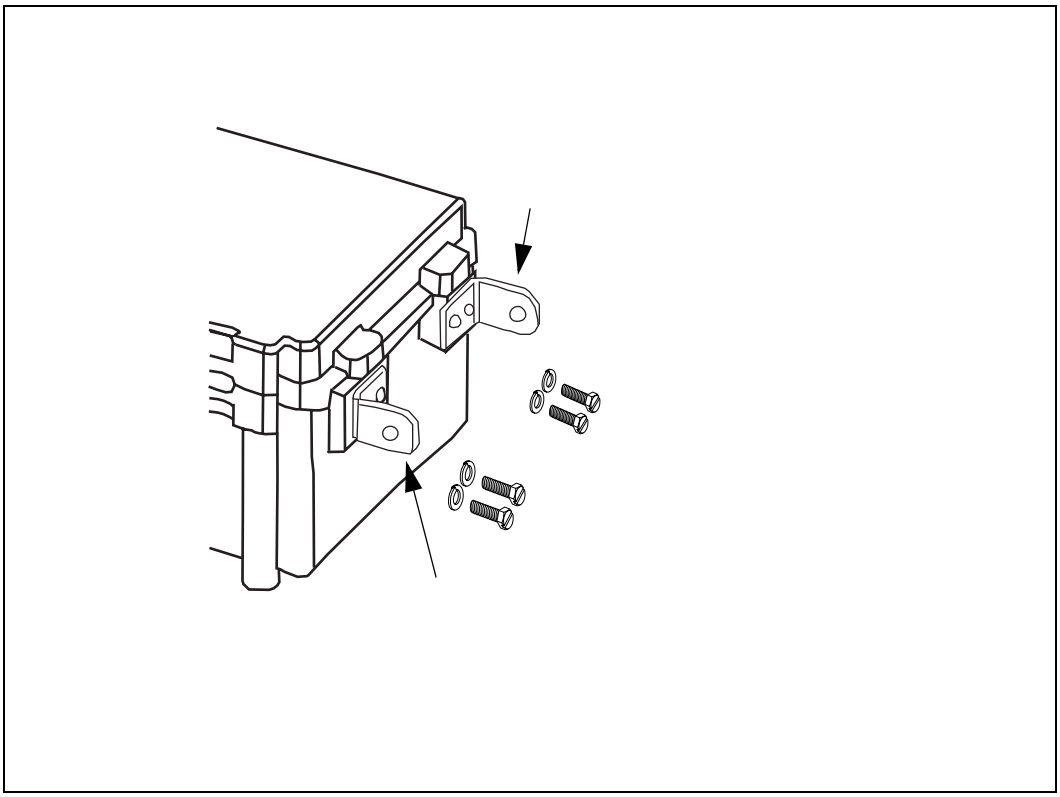

**4** Attach the antenna bracket (MP4) to the L-shape bracket (see Figure 6.3).

**Figure 6.4 Attaching antenna bracket to the L-shape bracket**

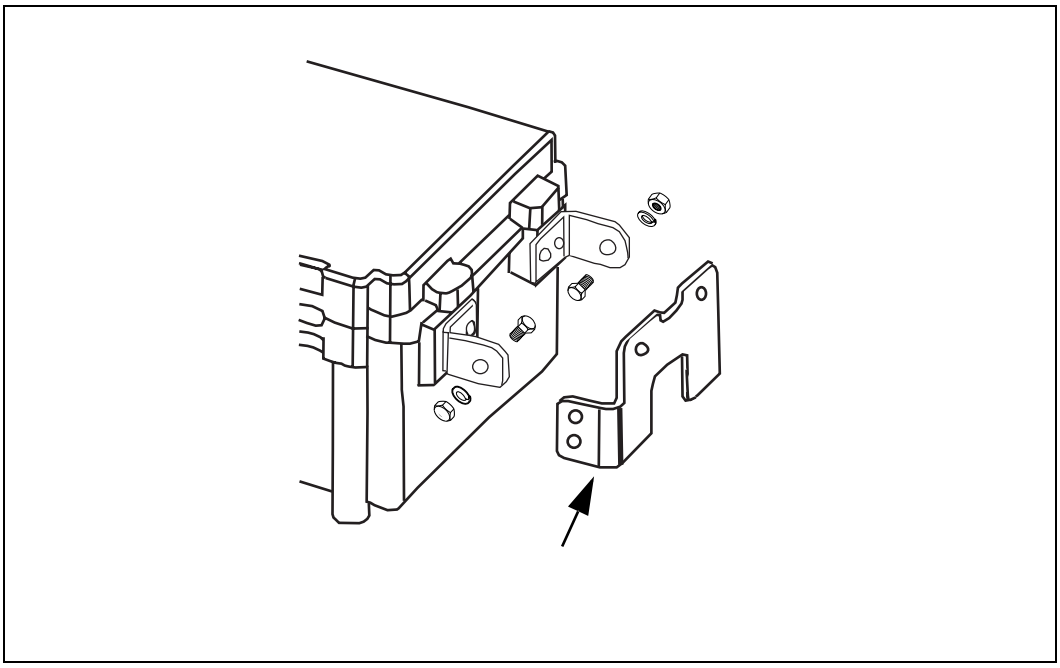

**5** Attach the tilt guide bracket to the bracket on the antenna (see Figure 6.4):

a Align the holes on the side of the bracket with the holes on either side of the antenna's bracket.

b Insert a bolt through each hole, and tighten a nut and washer on each bolt to hold the tilt guide bracket to the antenna..

**Figure 6.5 Attaching tilt guide bracket to the bracket on the antenna**

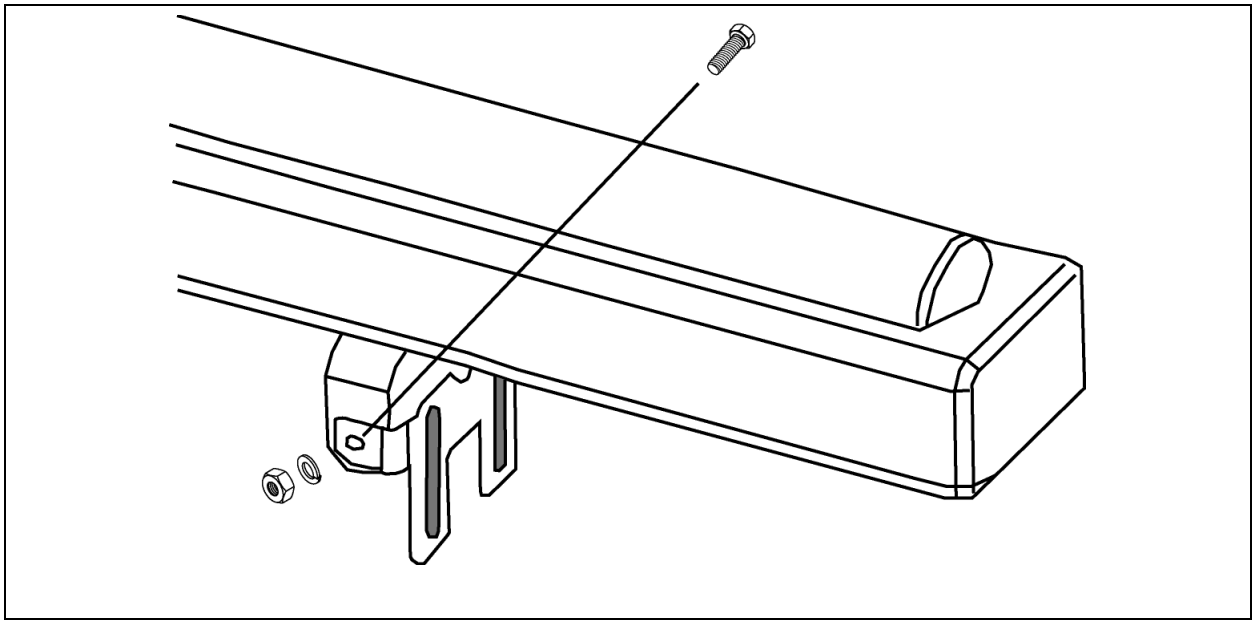

**6** Attach the tilt guide bracket (MP3) to the antenna bracket.Make sure the domed-side of the washer faces the nut.

**Figure 6.6**

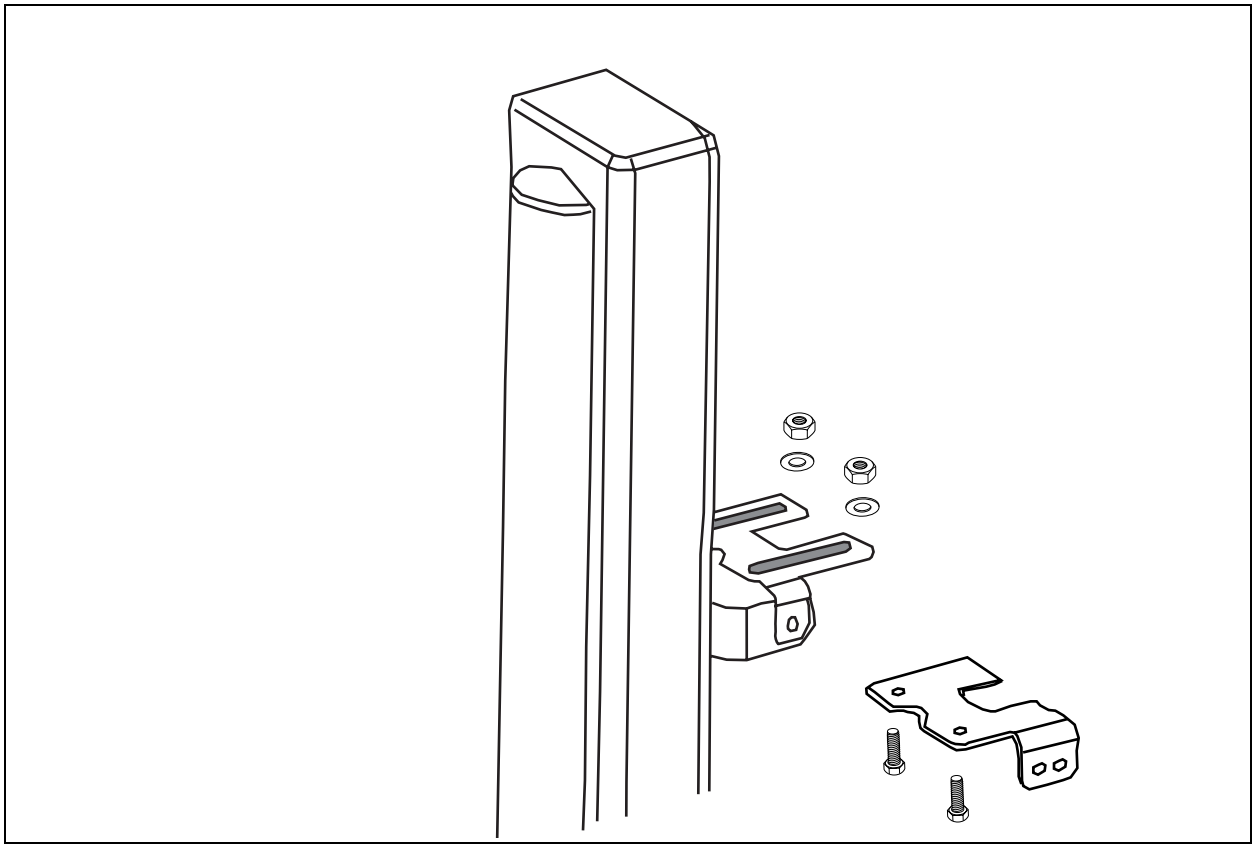

**7** Attach the antenna brackets to the bolts on the left and right side of the antenna (Figure 6.6)..You **must** attach these brackets to the antenna bolts before attaching the brackets to the base station.

**Figure 6.7 Bracket on antenna bolt**

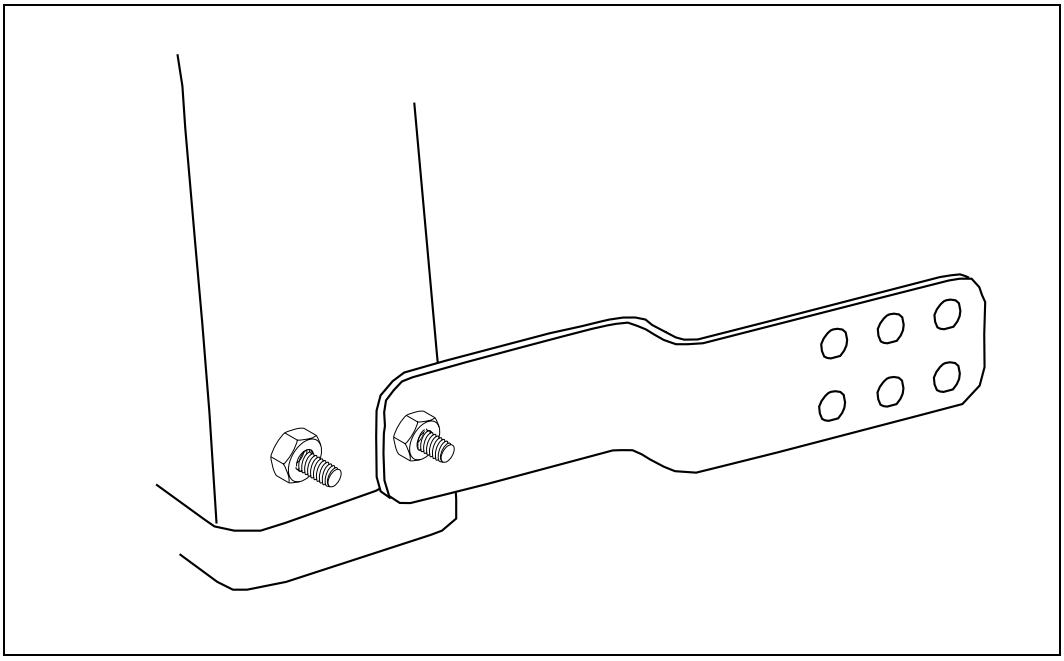

**8** Attach the antenna brackets to the bottom left and right sides of the I-BTS. Insert the bolts through the hole in the bracket which provides the desired level of down tilt.

- Top set of holes (the holes closest to the antenna bolt) provide a ___ level of tilt.
- Middle set of holes provide a ___ level of tilt.

- Bottom set of holes (the holes farthest from the antenna bolt) provide a ___ level of tilt.

**Figure 6.8 Antenna brackets on bottom left and right sides of I-BTS**

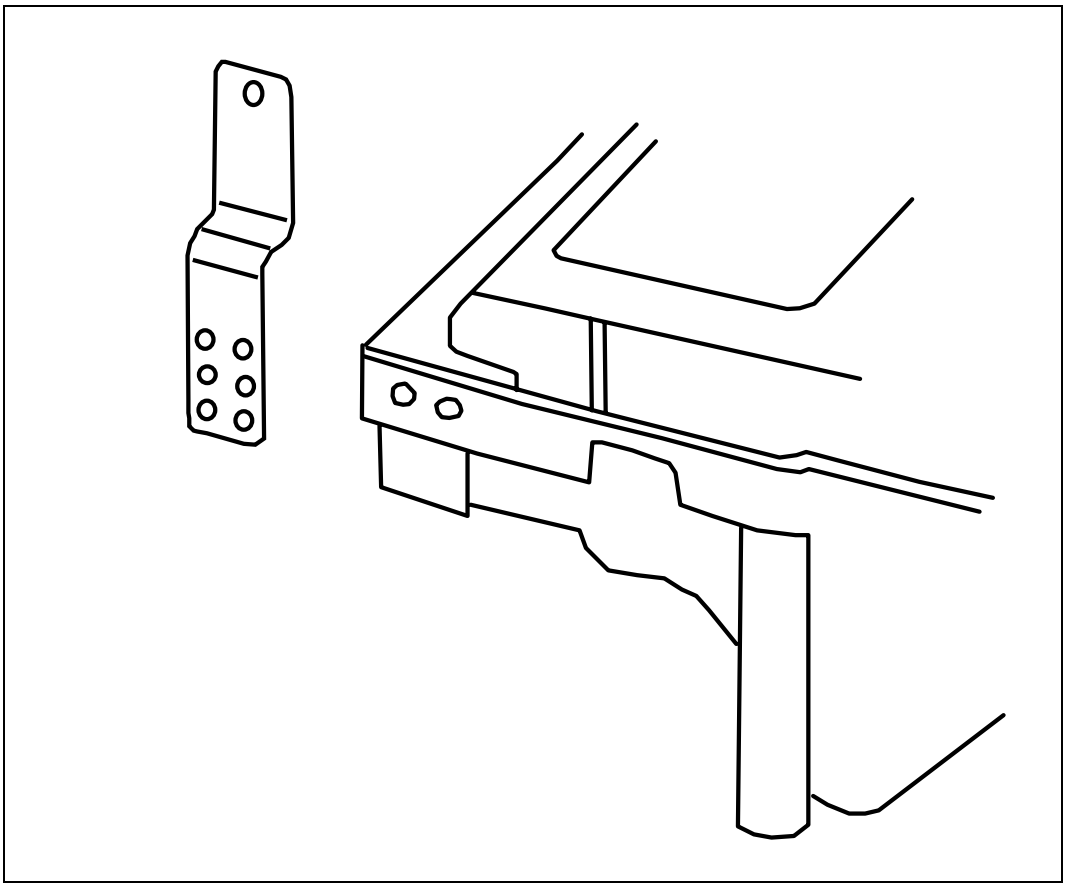

**9** Adjust the antenna tilt and tighten hardware.

**10** Connect the cables on the bottom of the I-BTS.

# Base station connectors

Figure 6.8 shows the connectors that the base station supports.

**Figure 6.9 Base station connectors**

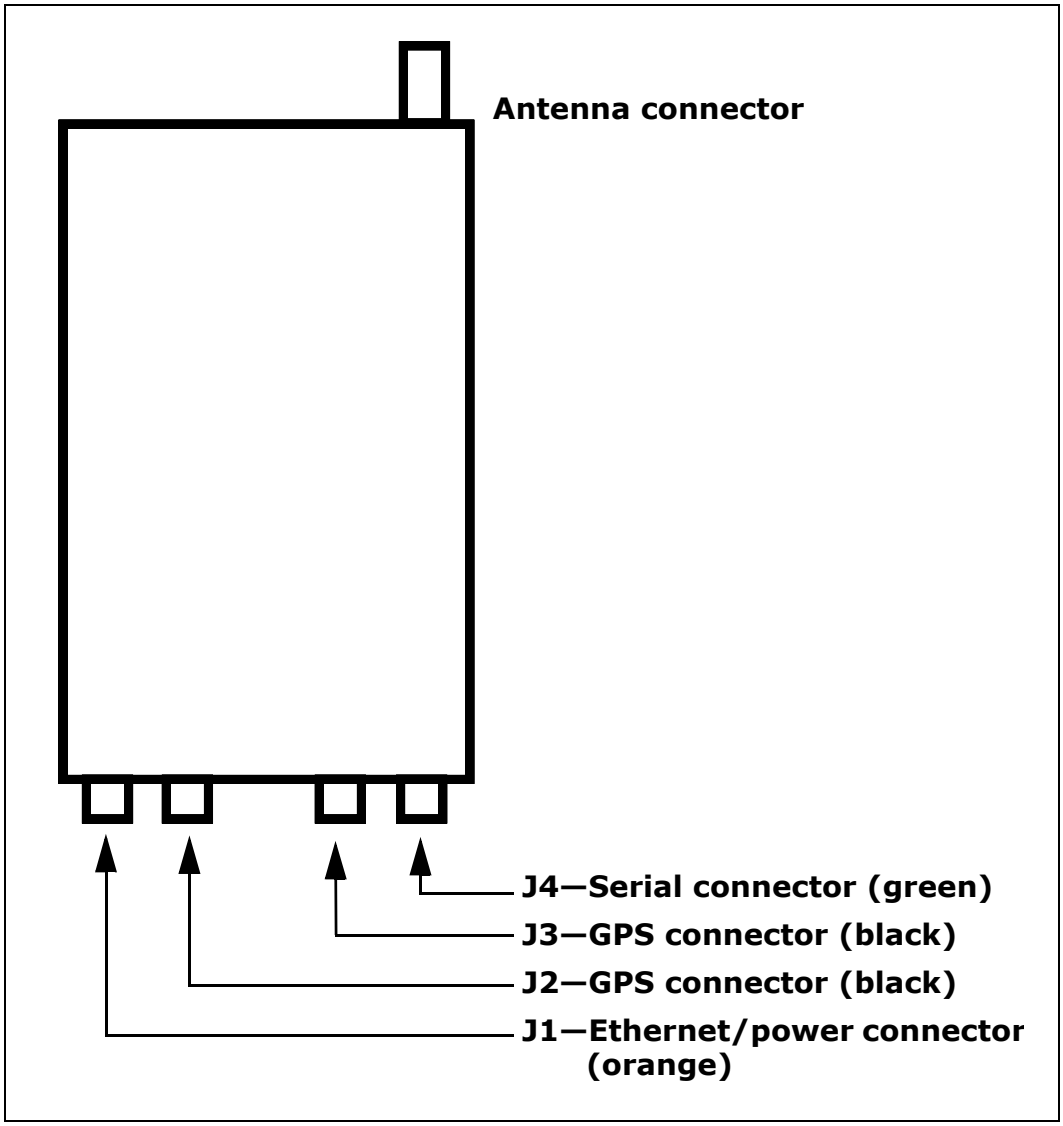

# Ethernet (data) and power connector

On the base station, the Ethernet/power connector is orange.

The Ethernet and power connector supplies data and DC power to the base station. The connector to the TVS module has 8 pins:

- Ethernet transmit uses 2 pins.
- Ethernet receive uses 2 pins.
- Power V- uses 2 pins.
- Power V+ uses 2 pins.

Figure 6.9 shows the Ethernet and power connector which plugs into the TVS module.

**Figure 6.10 Ethernet (data) and power connector**

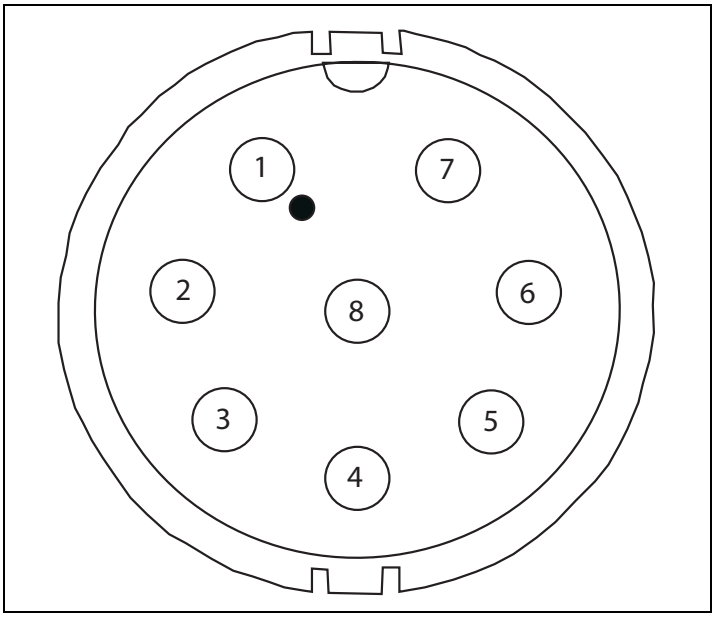


The connector to the base station has 13 pins.

**Figure 6.11 Ethernet (data) and power connector**

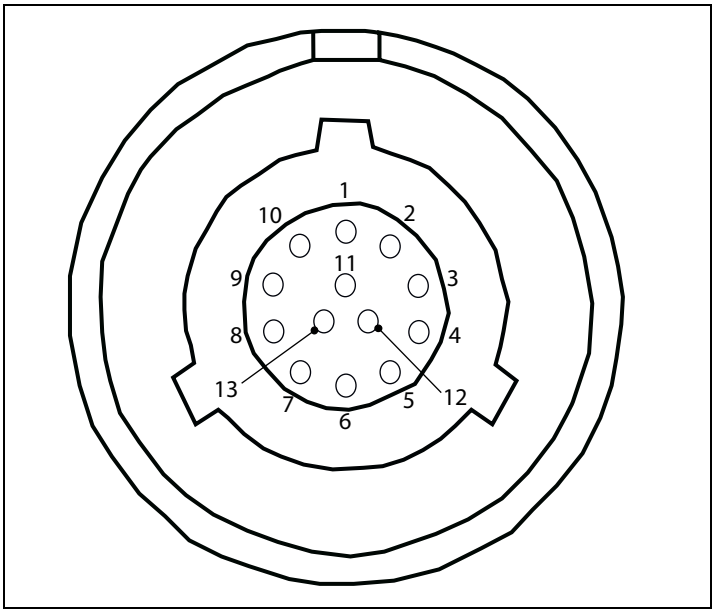

## Ethernet/power connecting cable

Depending on your needs, you can order any of the following cables to connect the base station to the TVS module.

**Table 6.1 Ethernet/power base station cable choices**

| Cable part number | Length (feet) |
|---|---|
| 597-6027-0002 | 2 |
| 597-6027-0004 | 4 |
| 597-6027-0006 | 6 |
| 597-6027-0010 | 10 |
| 597-6027-0025 | 25 |
| 597-6027-0050 | 50 |
| 597-6027-0100 | 100 |
| 597-6027-0200 | 200 |
| 597-6027-0300 | 300 |

Table 6.2 describes the pins of the Ethernet/power cable that connects the base station to the TVS device.

**Table 6.2 Ethernet/power cable pins**

| Pin | TVS connection | Base connection |
|---|---|---|
| 1 | Tx+ | -48 VDC |
| 2 | Tx- | -48 VDC |
| 3 | Rx+ | +48 VDC |
| 4 | Rx- | +48 VDC |
| 5 | +48 VDC | Rx- |
| 6 | +48 VDC | Rx+ |
| 7 | -48 VDC | not used |
| 8 | -48 VDC | not used |
| 9 | | Tx- |
| 10 | | Tx+ |
| 11 | | not used |
| 12 | | not used |
| 13 | | not used |

Table 6.3 describes the color and function of the wires in cable 597-6027-0xxx.

**Table 6.3 Function of wires in cable 597-6027-0xxx**

| Wire color | Wire function |
|---|---|
| White/orange | Tx+ Ethernet |
| Orange | Tx- Ethernet |
| White/green | Rx+ Ethernet |
| Green | Rx- Ethernet |
| Red | +48 VDC |
| Red/white | +48 VDC |
| Black | -48 VDC |
| Black/white | -48 VDC |

# TVS module connectors

The TVS module has connectors on both its right and left sides.

## Base station to TVS connector

The base station connector supplies power and an Ethernet connection to the base station. Connect cable 597-6027-0xxx to this side of the TVS module.

**Figure 6.12 TVS module connector: Base station connector**

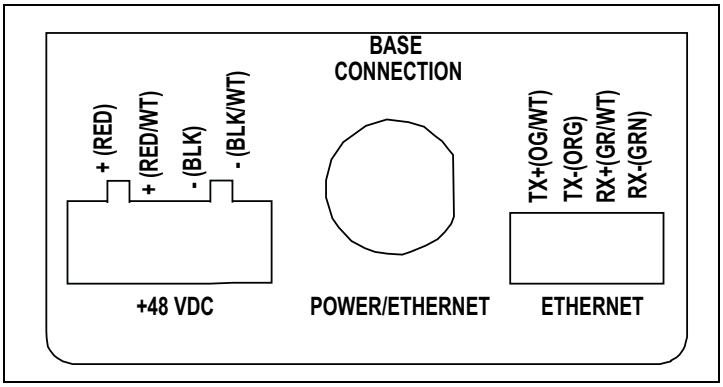


**Note:** Use the AUX +48 VDC and AUX ETHERNET connections only if you need to cut off the circular connector from the power/Ethernet cable (597-6013-0xxx). For example, you might not be able to use the circular connector if it cannot fit through a space or hole in a wall at the installation site. Instead, you may split the cable and put a 4 position .150" spaced terminal block on the Ethernet wires, and a 4 position .200" spaced terminal block on the power wires. Then, you will plug the appropriate connector from the split cable into the corresponding connector in the TVS module. Table 6.3, "Function of wires in cable 597-6027-0xxx" on page 6-57 describes the wires in the cable.

## Power supply cable and ISP Ethernet network connector

The other side of the module has a connector for both an Ethernet cable coming from your ISP network and for the +48 VDC power coming from a power supply.

**Note:** To ensure your base station is properly protected from possible lightning strikes, ensure you plug the power cable coming from your power supply into this connector in the TVS module. If you plug the power cable into the base station connector side, the base station will power up, but you will not be properly protected against possible lightning strikes.

**Figure 6.13 TVS module connector: power/Ethernet connector**

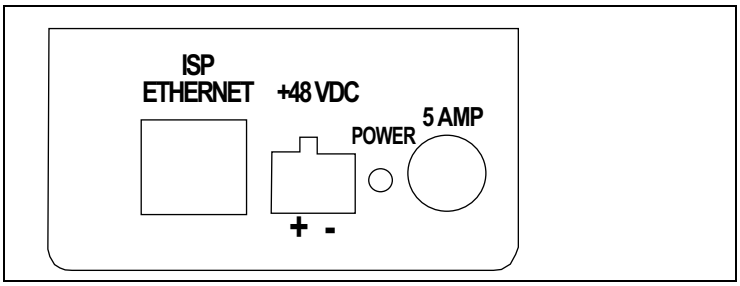

Table 6.4 describes the recommended mating connectors. The use of these connectors are optional.

**Table 6.4 Recommended mating connectors (optional)**

| Ref des | Description | Phoenix contact part number | Digi-key part number |
|---|---|---|---|
| J1 | 2pin, 5.08mm Terminal Plug | 1757019 | 277-1011-ND |
| J3 | 4pin, 5.08mm Terminal Plug | 1757035 | 277-1013-ND |
| J4 | 4pin, 3.81mm Terminal Plug | 1803594 | 277-1163-ND |

# GPS connectors

On the base station, the GPS connectors are black.

The base station supports two GPS connectors: one connector is used to supply the GPS signal, either by a direct connection to the GPS device, or by a daisy chain connection to another base station in the cell. The other GPS connector is used to make a daisy-chain connection from the current base station to the next base station.

**Figure 6.14 GPS connector**

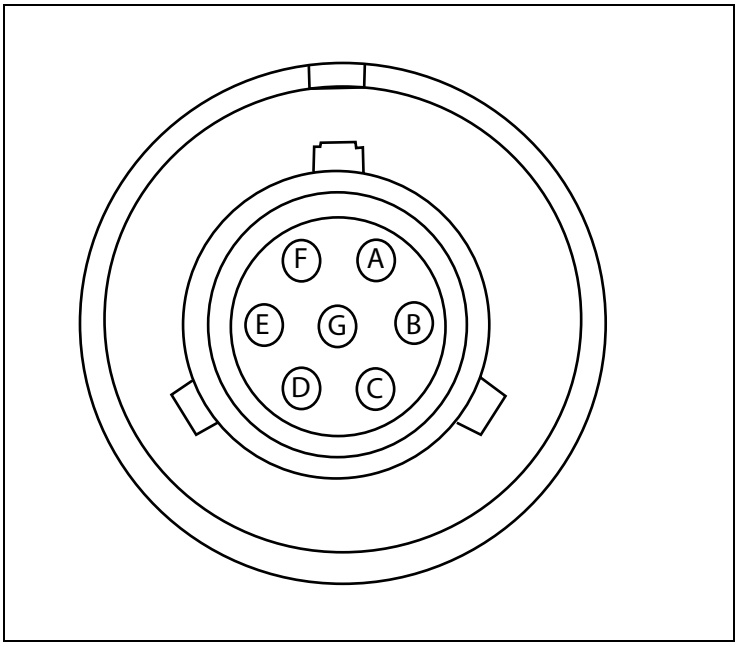


An RS-422 line feeds 1PPS+ and 1PPS- with the time synchronization pulse from the GPS equipment to the base station.

An RS-422 line also feeds 422Data+ and 422Data-, to allow data communication from the GPS device to the base station. This is one-way communication, with the GPS device giving the base station time information.

The 18V+ and ground pin supply power to the GPS device from the base station. The GPS device uses 18 volts DC at 150 milliamperes.

## GPS connecting cable/Inter-base station connecting cables

You need one GPS device per cell. You then directly connect one base station within that cell to the GPS device. Next, the other base stations are connected to each other, using a daisy chain wiring scheme, so that all base stations in the cell can receive a GPS signal.

You can choose the length of the cable that connects the base station to the GPS receiver.

- The cable that comes standard in the base station site installation kit is 100 ft. (part number 597-6025-0100).
- If desired, you can use a shorter cable to connect the base station to the GPS receiver. This alternate cable is 25 ft. (part number 597-6025-0025).

You can also choose the length of the daisy-chain cable that connects one base station to another base station.

- The standard cable shipped in the base station installation kit is 3 ft. (part number 597-6026-0003).
- If desired, you can use a longer cable to connect one base station to another. This cable is 10 ft. (part number 597-6026-0010)
- If you need to remove a base station for service, you can use the longer, 10 ft. cable to jumper the GPS cables together, and continue cell operation.

The last base station in the daisy chain requires a load termination to be connected to the GPS connection. This base terminator plug is 100 ohm (part number 515-6005-0001).

# Serial interface connector

On the base station, the serial interface connector is green.

For base station configuration, the serial interface connector lets you directly connect the base station to a computer. The seven-pin connector is an RS-232 cable (10 ft.), physical interface.

**Figure 6.15 Serial interface connector**

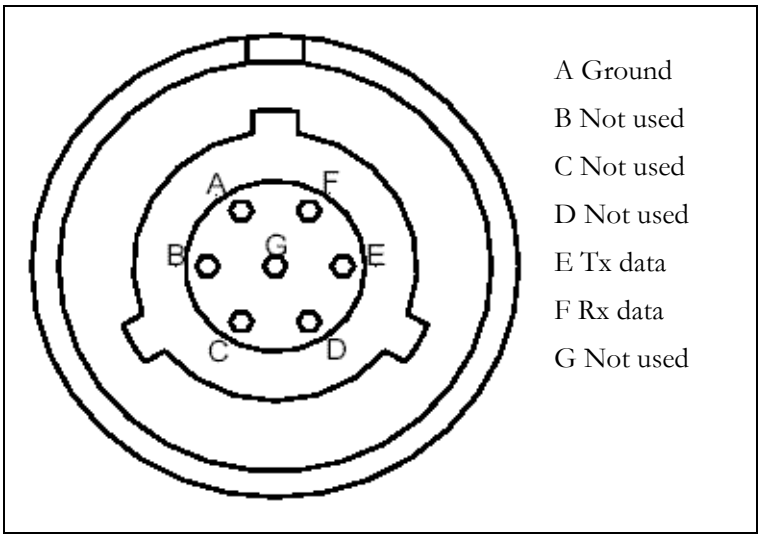


## Serial interface connecting cable

Cable 597-6028-0010 has a female, circular connector on one end, and a DB-9 female connector on the other end. Plug the DB-9 end of the cable into a computer. Plug the other end of the cable into the serial interface connector.

# Antenna connector

The antenna connector is a type N female connector. It has a built-in, internal 1/4 wave stub lightning protector. Connect the base station to the antenna using a coaxial cable. Connect the proper lightning ground wiring to the antenna lightning protector.

# Mounting and grounding the base station

You can mount the base station to any surface. To mount the base station to a wall, you need to use the supplied mounting brackets. If you are installing the base station on a tower, you need to use mounting plates, which you need to acquire from another equipment supplier.

## Mounting the base station to a wall

To mount the base station to a wall:

**1** Find a surface suited to base station installation.

a Use installation kit 123-0100-0130 to install the base station to a wall or back board. The kit supplies a bracket and hardware that are necessary to mount the base station.

b Plan to install the base station vertically, so the antenna connector is at the top (facing skyward), and the other circular connectors are at the bottom (facing the ground).

c Make sure the area above and below the location where you want to install the base station has a good distance for clearance. This clearance allows for proper air circulation and heat flow from the heat sink fins on the back of the base station. The clearance also allows for the coaxial cable and the other cable connections.

**2** Drill mounting holes into the surface, according to the dimensions shown in Figure 6.15.

**Figure 6.16 Base station mounting template**

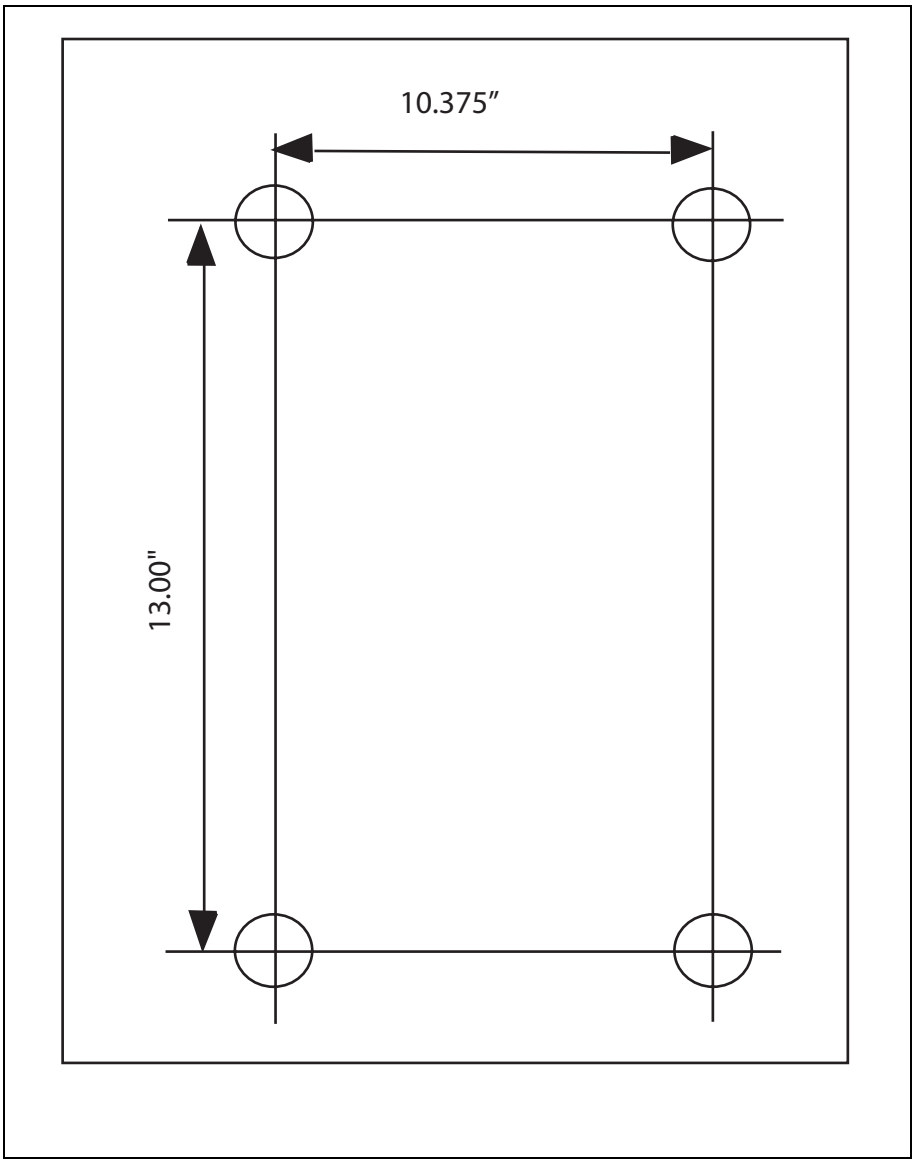


**3** To attach the base station to a wall, use the mounting brackets. Install them on the base station first, then attach the brackets to the wall. To attach the brackets to the base station, use 5/16 inch x 18 inch UNC thread bolts and a lock washer which are supplied in the installation kit. Use the optional bolts to then attach the bracket to the surface.

## Mounting the base station to a tower

To mount the base station on a tower:

1. Mount a back board or plate to the tower.

   This back board or plate is custom hardware supplied by you, the service provider. Examples of material you may want to use for your back board or plate include a 1/4 inch aluminum plate, 3/4 inch green-treated plywood, or 2/12 inch green treated lumber.

2. After you have mounted your back board or plate to the tower, mount the base station to the plate using installation kit 123-0100-0130.

## Mounting the base station to a 19 inch rack

Base stations can be mounted to a 19 inch relay rack. Typically, NextNet Wireless stages this rack for customers as a service.

After staging, the base stations are mounted in the rack and wired to the TVS modules, the power supply, the backbone switch, and grounding plate.

If you desire to stage your own relay rack, you must use two 19 inch brackets (part number 350-0100-0101) and at least one grounding plate (part number 30-0100-0020).

## Grounding the base station

The grounding location differs depending on the type of base station you are using.

- Base stations with the ability to change their modulation method (AMOD base stations) have a grounding connection on the hinged side of the base station.
- Base stations without the ability to change their modulation method have a grounding connection at the base of the antenna connection.

To ground either type of base station, run a 6-gauge or higher grounding wire from this connection to the ground bar on the rack, to the building's ground connection on the roof, or to the grounding location at the tower.

The ground of the power can be either negative or positive. The 48 volt power input to the base station is floating, so either the positive or negative can be grounded.

# Connecting the antenna to the base station

This section provides tips you can use to connect the antenna to the base station for installations where the antenna is not mechanically mounted to the Integrated Base Station

It also provides step-by-step instructions for connecting the components to each other.

## Antenna connection tips

Use the following tips when connecting the base station to the antenna:

- You connect the antenna to the base station using a coaxial cable. The size of the cable depends on the distance between the base station and the antenna.
  - The greater the distance, the larger your coaxial cable needs to be, in order to maintain low signal loss.
  - It is recommended that you keep signal loss to a minimum. At a maximum, the signal loss should be no more than 2 to 3 dB, including all coaxial cable and connectors.
- Use short coaxial jumpers from the base station to the main coaxial line, and from the main coaxial line to the antenna. It is recommended you use 1/2 inch flexible line, of the shortest length possible, while still allowing the flexibility to make a good connection.
- The base station contains an antenna connector with a 1/4 inch wave stub lightning protector. You do not need to place an external lightning protector in the coaxial cable.

## Connecting the antenna to the base station

To attach the antenna to the base station:

1. Mount the antenna according to the manufacturer's instructions.
2. Connect one end of a short coaxial jumper to the antenna. Connect the other jumper end to the main coaxial cable.
3. On the base station's antenna connector, connect one end of a short coaxial jumper. Connect the other jumper end to the main coaxial cable coming from the antenna.
4. Make sure the coaxial line is properly grounded.
5. Properly seal the co-axial connections with weatherproof components, tape and wrap.

# Connecting the GPS equipment to a base station

The GPS equipment provides a time synchronization signal to the base station. This signal is needed to ascertain the proper timing for time division duplexing (TDD).

The equipment is a smart antenna in a sealed, shielded, self-contained unit that houses a GPS receiver, GPS antenna, and interface circuitry.

When powered, the GPS provides accurate time, with a time pulse of one pulse per second, synchronized to Universal Time, Coordinated (UTC) within 150 nanoseconds.

## GPS equipment mounting tips

You must use the NextNet Wireless supplied GPS system to supply a time synchronization signal to the base stations in a cell. You cannot use a GPS from another manufacturer.

The GPS does not ship with mounting accessories. You can obtain these accessories from many suppliers around the world, especially distributors of marine products.

Follow these tips when mounting the GPS:

- Mount the GPS unit on a threaded pipe or pole.
- The GPS mounting socket accepts a 1.0000 x 14 straight thread. It is recommended that the pole/pipe you use be 1.000 inch.
- Secure the pipe or pole to the building or other support structure.
- Ensure at least half of the sky is clearly visible to the unit.
- Expose the unit to the southern portion of the sky. GPS satellites move generally from the southwest to the northeast.

## Connecting the GPS unit to the base station

One GPS unit can support numerous base stations in the same cell.

Use the GPS-to-base station cable to attach the GPS unit to one of the base stations in the cell.

To connect the cable to the GPS unit and to the base station (both of which have already been installed and mounted):

1. Connect the cable's molded, circular female connector to the GPS unit.
2. After connecting the cable to the GPS unit, run the cable to the base station. Plug the cable's other end into the base station's GPS connector.
3. Secure the cable that you just ran to an appropriate support structure. Coil and tie any excess cable.
4. The GPS unit receives its power from the base station. The base station supplies power to the GPS device, which uses 18 volts DC at 150 milliamperes.
5. So that the remaining base stations in the cell can receive a GPS signal, connect a base station adjacent to the base station you just connected to the GPS unit.

   Continue to use the daisy chain wiring scheme to connect the remaining base stations, until all of the base stations within the cell are connected to each other.

   On the last base station in the daisy chain, connect the load termination on the open GPS connection.

# Connecting to the backbone network

The base station connects to a TVS module. You then connect the TVS module to your network. Typically, base stations connect to a level 2 switch at the cell site, using a 10BaseT connection. The switch controls the base station data traffic to and from the backbone network.

Connect the switch to the backhaul network using the appropriate cabling.

# Powering base stations

This section describes tips for powering base stations, as well as the component connection sequence you need to use to properly power base stations.

## Powering tips

- It is recommended that you use a redundant power supply for base stations.
- Each base station requires 48 volts DC at 3.0 amps maximum.
- The ground of the power can be either negative or positive. The 48 volt power input to the base station is floating, so either the positive or negative can be grounded.
- Power input is polarity sensitive, so be sure you connect V+ and V- properly.
- Depending on the type of equipment you own, supply power to the Ethernet switch and backbone network equipment.
- It is recommended that you use an uninterruptable power supply (UPS).

  Tips for sizing the UPS include:

  - Size the voltage and amperage of the power supply according to the number of base stations at your cell site.
  - Size the UPS according to the efficiency of the DC power supplies and power requirements of the other ancillary equipment, such as the Ethernet switch and backbone network equipment.
  - Consider the time you want to allow the system to operate on the UPS.

## Powering the base station

The base station does not have a power switch. Rather, it receives its power when the UPS, power supply, and TVS module are connected to the base station through the Ethernet/ power cable.

To connect the base station to a power supply, connect these components in the order that follows:

1. Connect the base station to the antenna.
2. Connect the GPS to a base station, and use a daisy chain wiring scheme to connect the other base stations.
3. Connect the base station to the TVS module using the Ethernet/power cable of the desired length.
4. Use an Ethernet cable to connect the TVS module to the network. Use a standard DC power cable to connect the TVS module to the power supply.
5. Connect the power supply to the UPS.
6. Connect the UPS to an AC power supply.

CHAPTER

# 7

# INSTALLING THE RACKMOUNT BASE STATION (RMB)

## Chapter overview

This chapter describes how to install the rackmount base station (RMB). It describes:

- Installing the cabinet onto a 19 inch rack
- Installing the power supply and switch
- Installing the RMB into the base station cabinet
- Connecting the RMBs to the cell and to cell-site components

## Before you begin

Before you install RMBs:

- It is recommended that you assign a name to the RMB. For more information refer to Chapter 4, "Configuring base stations" in this guide.
- It is also a good idea to configure the base station with channel, VLAN, power, and other parameters, as described in Chapter 4, "Configuring base stations" in this guide.

# Installation overview

This section provides an overview of the tasks you will perform when installing RMBs.

To install the RMBs:

1. Install the mounting brackets to the cabinet, then attach the cabinet to the rack.

---

**Note:** Do not operate the system before you have securely mounted the cabinet to a standard 19" rack that can handle the weight of the total system. To calculate the weight of your system, note that the housing weighs 43 pounds, each base station weighs 18 pounds, and each filter weighs 3.5 pounds.

So, if you have one cabinet, one RMB, and one filter, the weight of the total system is 64.5 pounds. Adjust this figure according to the number of RMBs and filters that you are using.

---

2. Attach the power supply and switch to the rack.
3. Insert the pre-configured RMBs into the cabinet.
4. Connect the cabinet to the following components:
   - Switch
   - Power supply
   - Antennas or antenna filters, if filters are required.
   - GPS
5. Follow your company's good grounding practices. Typically, you will ground the cabinet bus bar and the power supply.
6. Power on the base stations.

For further information about these tasks, refer to the sections in this chapter.

# Installing the mounting bracket and attaching cabinet to the 19-inch rack

Before inserting RMBs into the cabinet, attach the cabinet to the rack. To attach the cabinet to the rack:

**1** Attach a mounting bracket to the left side and right side of the cabinet using the 16 supplied screws (8 per side).

**Figure 7.1 Cabinet mounting bracket**

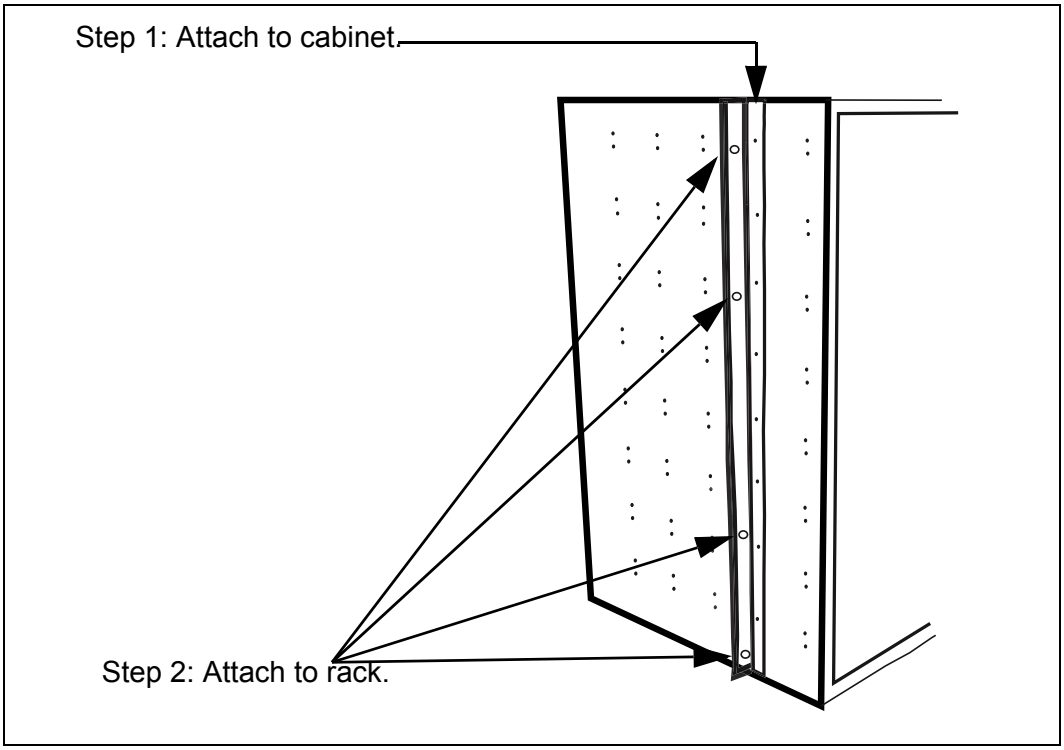


**2** Attach the cabinet to the rack with the 8 supplied screws, 4 for each side.

---

**Note:** Do not operate the system before you have securely mounted the cabinet to a standard 19" rack that can handle the weight of the total system. To calculate the weight of your system, note that the housing weighs 43 pounds, each base station weighs 18 pounds, and each filter weighs 3.5 pounds.

So, if you have one cabinet, one RMB, and one filter, the weight of the total system is 64.5 pounds. Adjust this figure according to the number of RMBs and filters that you are using.

---

# Attaching the switch and power supply to the rack

Figure 7.2 shows where the switch and power supply should be installed on the rack, in relation to the cabinet and RMBs.

**Figure 7.2 Location of switch and power supply in rack**

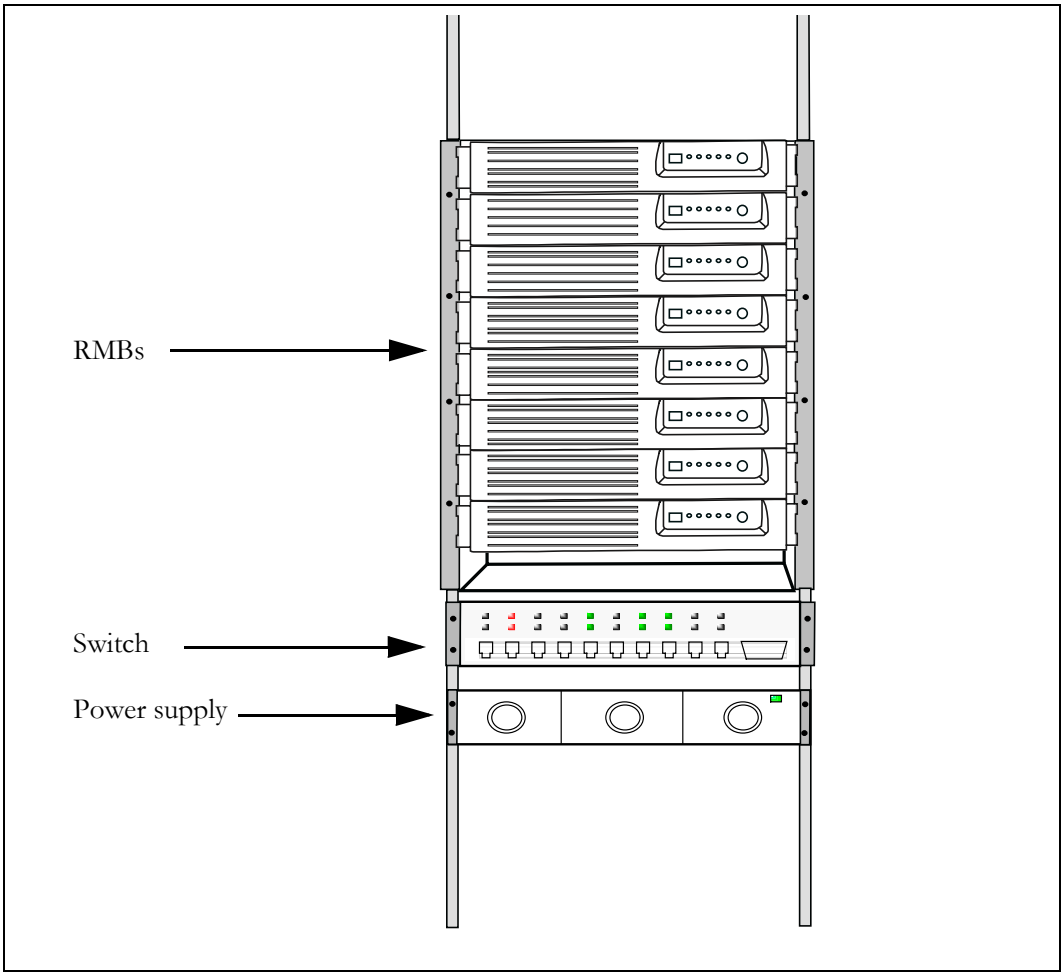


# Installing the RMBs into the cabinet

To install the RMB in the cabinet:

1. Grasp the RMB by handles on each side of the RMB.
2. Slide the RMB into the cabinet, aligning the guides along the side of the RMB with the gliders inside the cabinet.

   To ensure you align the RMB properly into the pre-installed harness connections, there is a guide pin on the back of the cabinet that fits into a guide pin opening on the back of the RMB. This guide pin will help the connectors on the back to align correctly.
3. When the RMB is properly installed and aligned in the cabinet, the plastic latches on the side of the front plate snap into place.

---

**Note:** Always make sure the RMB is slid greater than halfway into the cabinet. An RMB that is not at least halfway installed in the cabinet could fall out of the cabinet.

---

# Connecting RMBs to cell (cell wiring)

There are minimal wiring tasks for you to perform, as the RMB simply slides into the pre-existing wiring when you place the RMB in the cabinet.

The cabinet into which the RMB is installed has a pre-wired harness. This harness supplies power and Ethernet connectivity to the RMB. After you connect the antenna to the appropriate connector, the RMB also receives airlink traffic. Finally, the harness supplies an alarm capability to the RMB, as well as a GPS signal.

---

**Note:** Make sure you have made all antenna connections before attempting to transmit. Do not attempt to transmit before the antennas are connected.

---

Figure 7.3 shows how a cell, 4 RMBs, and ancillary equipment are wired together.

**Figure 7.3 Cell wiring diagram**

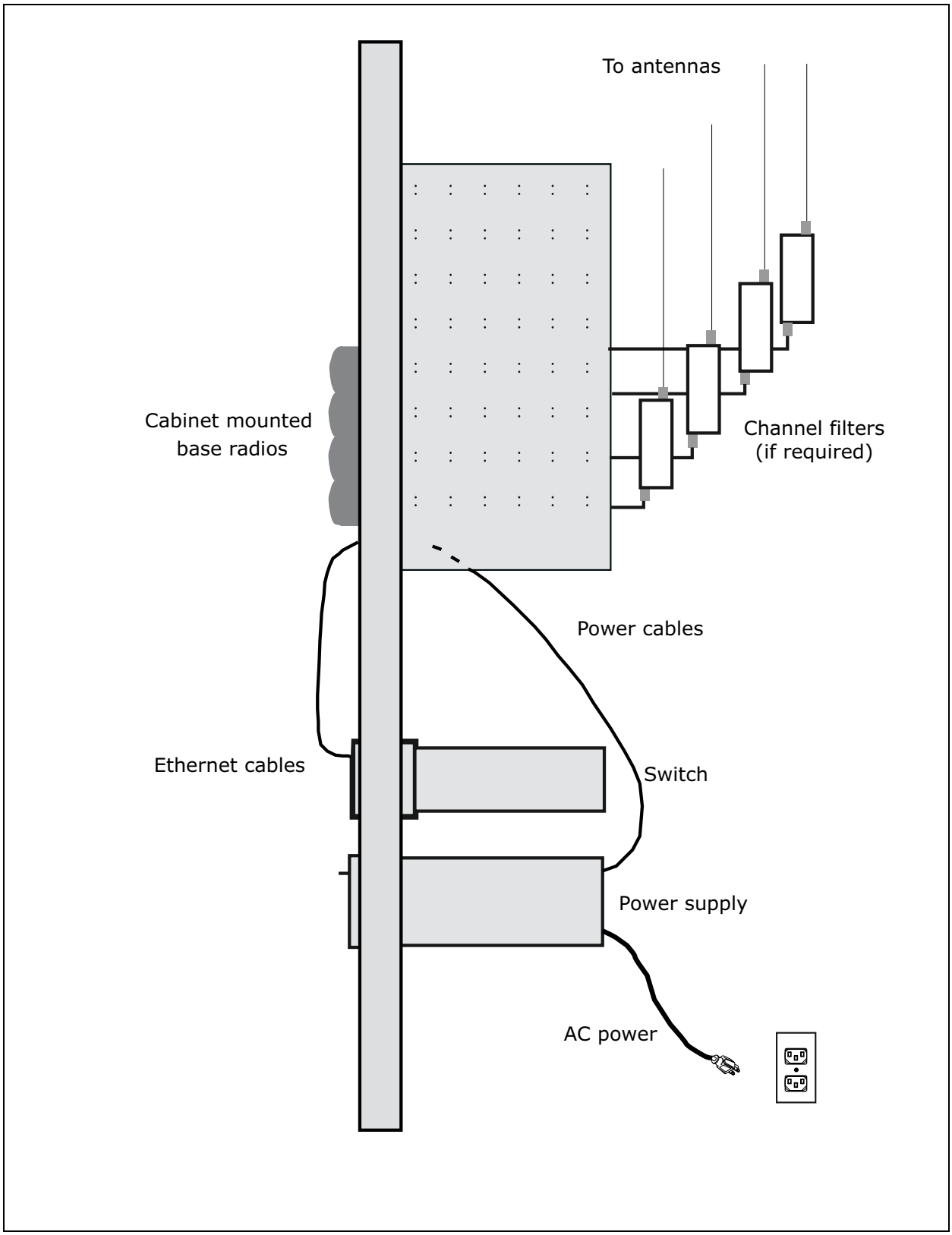

# Connecting power to the RMBs

This section describes how to supply power to RMBs in the cabinet, as well as recommendations for the type of power supply to use.

When choosing a power supply, keep in mind:

- Each base station requires 150 watts at 48 volts. So, if your cabinet holds 8 RMBs, the power supply should provide 1250 watts, at a minimum.
- The power supply you choose should use an "n + 1" configuration, so that the RMBs have a backup power source in case one of the power supply modules fails.

## Powering the base station

To connect the base station to a power supply, connect these components in the order that follows:

1. Connect the RMB to the antenna.
2. If you are using a GPS to supply a timing pulse to the base stations, connect the GPS to the GPS connector on the cabinet. Place a terminal plug on the other GPS connector on the cabinet.

---

**Note:** If you are using an RMB to supply the timing pulse to the other RMBs, set up the base station as described in the section "Configuring the time signal used by base stations." The cable harness in the cabinet then supplies the other RMBs in the cabinet with timing information.

---

3. Connect the Ethernet cable to the switch.
4. Connect the RMB to the power supply.
5. Connect the power supply to the UPS, if a UPS is available.
6. Connect the power supply and the UPS to an AC power supply.

Figure 7.4 shows the location of the power connection on the bottom of the cabinet.

**Figure 7.4 Power connections on bottom of cabinet**

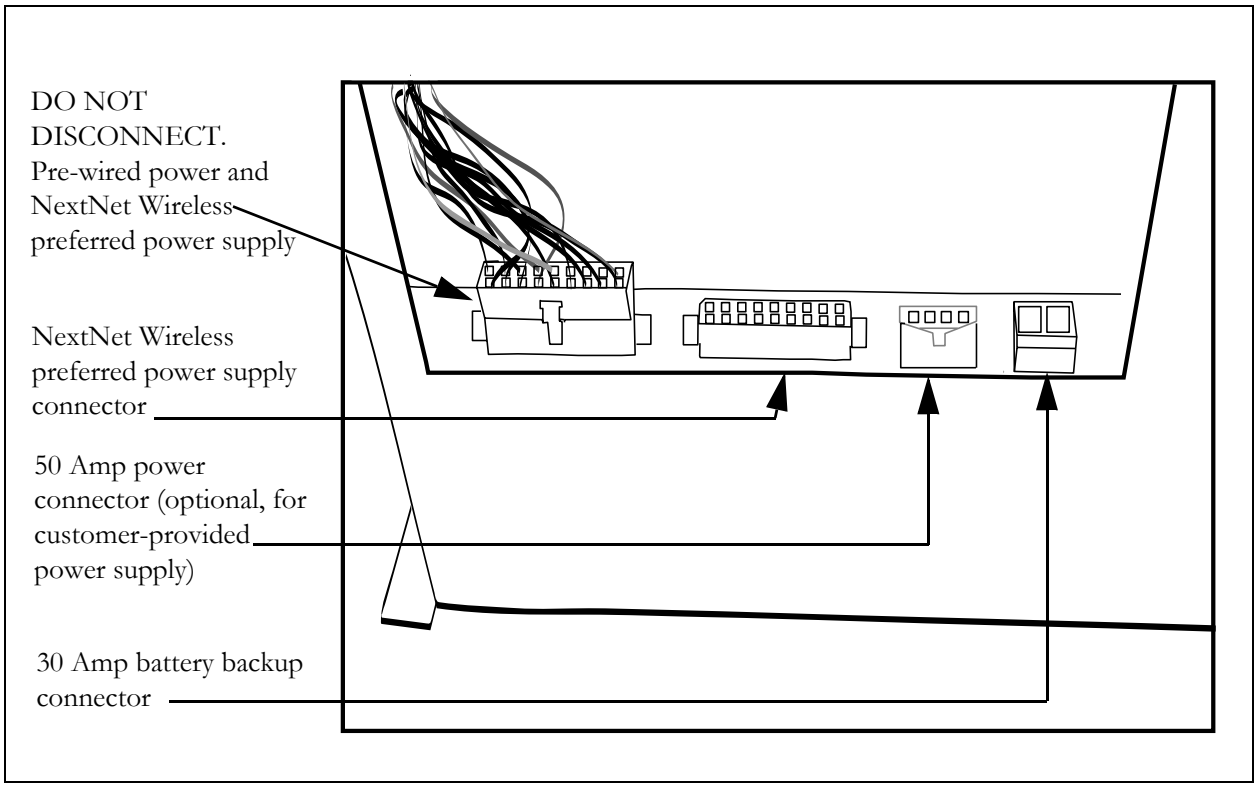


Table 7.1 describes the power connectors that you must use with the cabinet. If the exact connector is not available, use a connector that is similar to the one listed

**Table 7.1 Connector type to use with cabinet connectors**

| Connector | Connector type to use with |
|---|---|
| NextNet Wireless preferred power supply connector | Molex #39-01-2180 |
| 50 Amp power connector (optional, for customer-provided power supply) | Molex #42816-0212 |
| 30 Amp battery backup connector | Phoenix #1848892 |

To connect power:

**1** Perform one of the following:

- If you are using a power supply from or recommended by Nextnet Wireless, plug that connector into the NextNet Wireless supplied power connector on the bottom of the cabinet.
- If you are using a different power supply, connect it to the 50-amp power connector, found on the bottom of the cabinet.

**2** If desired, connect a battery backup power supply to the battery backup connector.

## Powering tips

- It is recommended that you use a redundant power supply for base stations.
- Each base station requires 150 watts at 48 volts of power.
- The ground of the power can be either negative or positive. The 48 volt power input to the base station is floating, so either the positive or negative can be grounded.
- Power input is polarity sensitive, so be sure you connect V+ and V- properly.
- Depending on the type of equipment you own, supply power to the Ethernet switch and backbone network equipment.
- It is recommended that you use an uninterruptable power supply (UPS).

  Tips for sizing the UPS include:

  - Size the voltage and amperage of the power supply according to the number of base stations at your cell site.
  - Size the UPS according to the efficiency of the DC power supplies and power requirements of the other ancillary equipment, such as the Ethernet switch and backbone network equipment.
  - Consider the time you want to allow the system to operate on the UPS.

# Grounding the RMBs

There is one grounding bar in each cabinet. Each bank of 4 RMBs are grounded to the bar.

The grounding bar also contains locations for grounding terminals so that you can ground the RMBs to your building's ground bar.

**Figure 7.5 Grounding the RMBs**

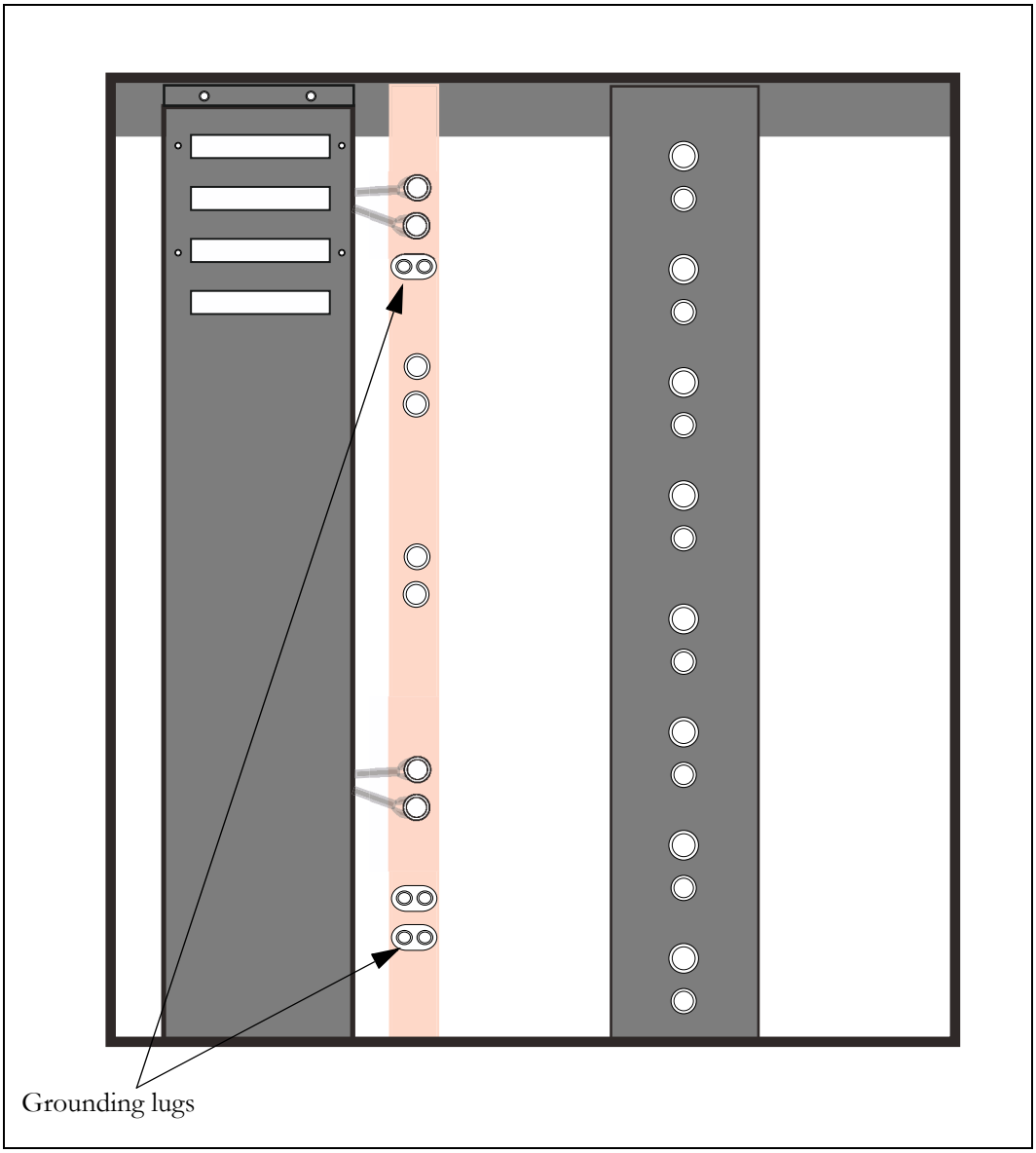

# Turning on the RMB's power

The front panel of the RMB has a programming cable connection, 5 light-emitting diodes, and a power button. Figure 7.6 shows the front panel of the RMB.

**Figure 7.6 RMB LEDs**

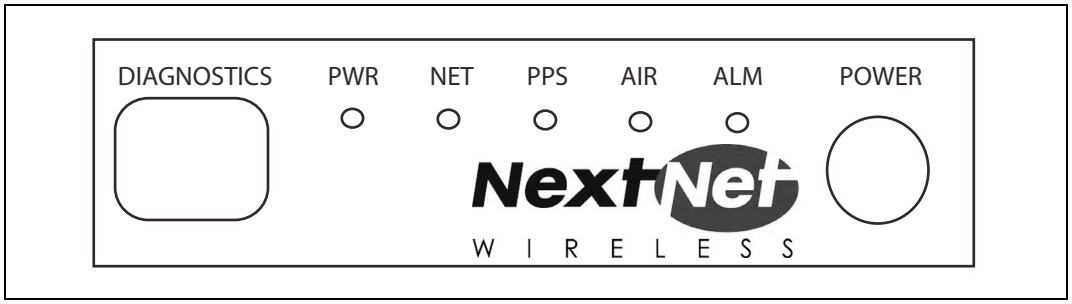


To turn on the RMB, press the power button. The LEDs then light. Table 7.2 describes what the base station LEDs indicate.

**Table 7.2 Description of LEDs on the base station**

| LED | Description |
|---|---|
| 1 (PWR) | When this green LED is lit, the RMB has power. |
| 2 (NET) | When this yellow LED is lit and blinking, information is being received on the RMB's Ethernet port. |
| 3 (PPS) | The LED indicates that the RMB is receiving the 1 pulse per second signal. |
| 4 (AIR) | When this LED is lit, the airlink on the RMB is operating. |
| 5 (ALM) | When this red LED is lit, an alarm on the RMB has been triggered. |

# Base station connectors

This section describes the GPS connectors and the serial cable connectors. The serial cable is used to configure the base station with information that is unique to the carrier.

## GPS connectors

Figure 7.7 shows the connectors that the base station supports.

**Figure 7.7 Connector on the serial cable used in configuring base stations**

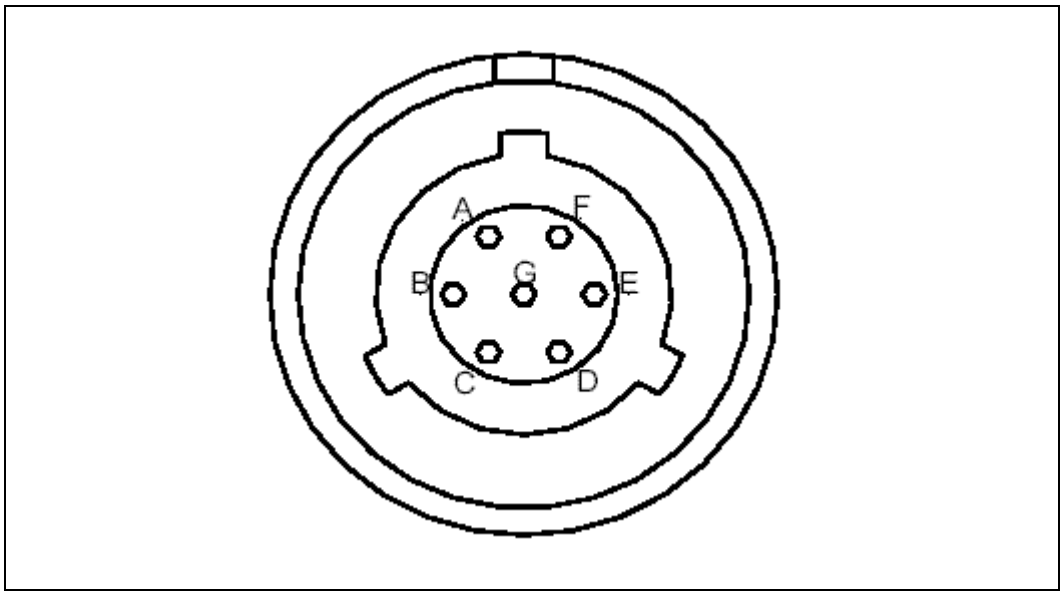


An RS-422 line feeds 1PPS+ and 1PPS- with the time synchronization pulse from the GPS equipment to the base station.

An RS-422 line also feeds 422Data+ and 422Data-, to allow data communication from the GPS device to the base station. This is one-way communication, with the GPS device giving the base station time information.

The 18V+ and ground pin supply power to the GPS device from the base station. The GPS device uses 18 volts DC at 150 milliamperes.

### GPS connecting cable/Inter-base station connecting cables

You need one GPS device per cell. You then directly connect one GPS connector on the cabinet to the GPS device. Then, on the remaining GPS connector on the cabinet, you connect the load termination.

## Power supply cable connections

Table 7.3 describes the pins of the power cable used with the RMB.

**Table 7.3 Power cable pins**

| Pin number | American wire gauge (AWG) | Color |
|---|---|---|
| Pin 1 | 18 AWG | Black |
| Pin 2 | 18 AWG | Black |
| Pin 3 | | |
| Pin 4 | 18 AWG | Black |
| Pin 5 | 18 AWG | Black |
| Pin 6 | | |
| Pin 7 | 18 AWG | Black |
| Pin 8 | 18 AWG | Black |
| Pin 9 | 22 AWG | White |
| Pin 10 | 22 AWG | Green |
| Pin 11 | 18 AWG | Red |
| Pin 12 | 18 AWG | Red |
| Pin 13 | | |
| Pin 14 | 18 AWG | Red |
| Pin 15 | 18 AWG | Red |
| Pin 16 | | |
| Pin 17 | 18 AWG | Red |
| Pin 18 | 18 AWG | Red |

## Diagnostic cable connections

It is recommended that you use the diagnostic cable provided by NextNet Wireless to configure the RMBs. One end of the cable has a RJ-45 type connector.

Table 7.4 describes the cable's pins.

**Table 7.4 Diagnostic cable pin connections (RJ-45)**

| Pin number, color | Connection |
|---|---|
| 1 | no connection |
| 2 | no connection |
| 3 | no connection |
| 4, red | GND |
| 5, green | RXD |
| 6, yellow | TXD |
| 7 | no connection |
| 8 | no connection |
| 9 | no connection |

The other end of the cable has a DB9 cable connector. Figure 7.8 describes the cable's pins.

**Figure 7.8 Diagnostic cable: DB9 connector pins**

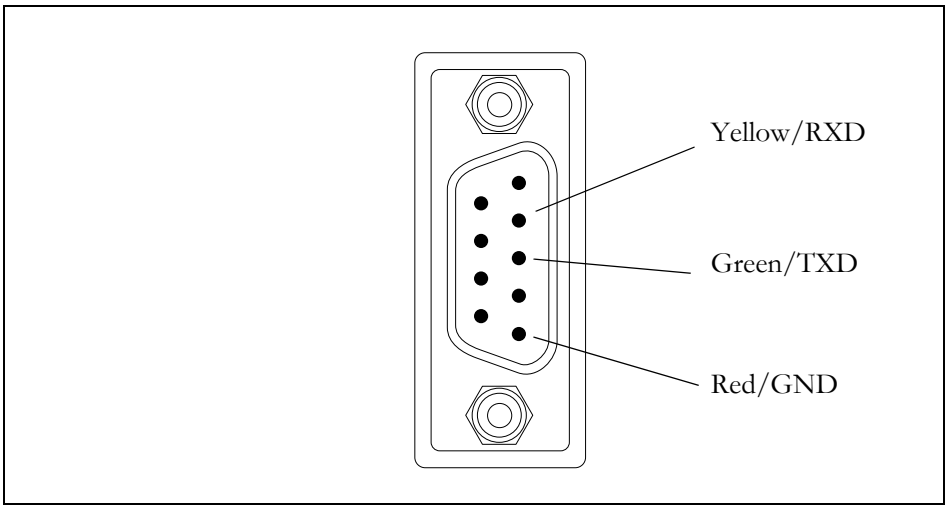


## Fuses and Ethernet cable connections on cabinet

Each RMB has a corresponding fuse and Ethernet cable connection on the cabinet. The RMB that occupies the lowest position in the cabinet is number 1, and the RMB that occupies the highest point in the cabinet is number 8.

Figure 7.9 illustrates the Ethernet cable and fuses that correspond to each RMB.

**Figure 7.9 Fuses and Ethernet cable connections on cabinet**

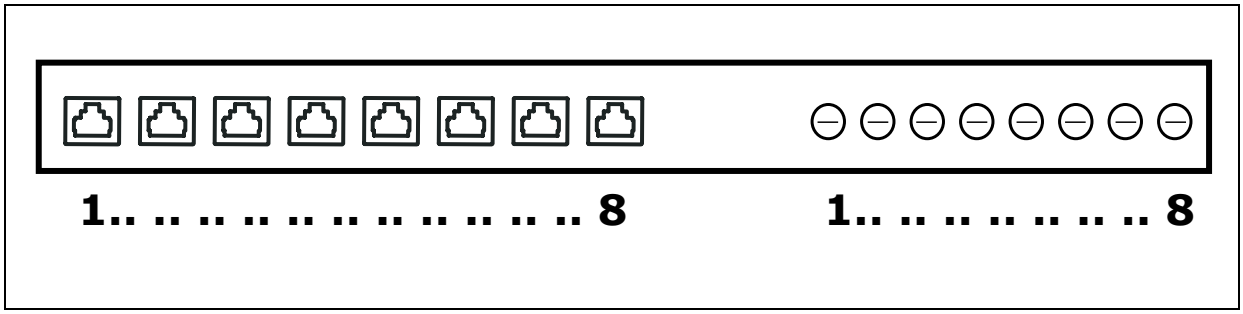

## Checking and replacing fuses

The system uses a standard fuse, AG3, 5 amps, 250 volts.

To remove a fuse from the cabinet:

**1** Insert a flat head screw driver into the slot on the front of the gray fuse case.

**2** Turn the screw driver counter-clockwise about 1/8th of a turn, until the fuse case pops out of the slot.

**Figure 7.10 Removing fuse from cabinet**

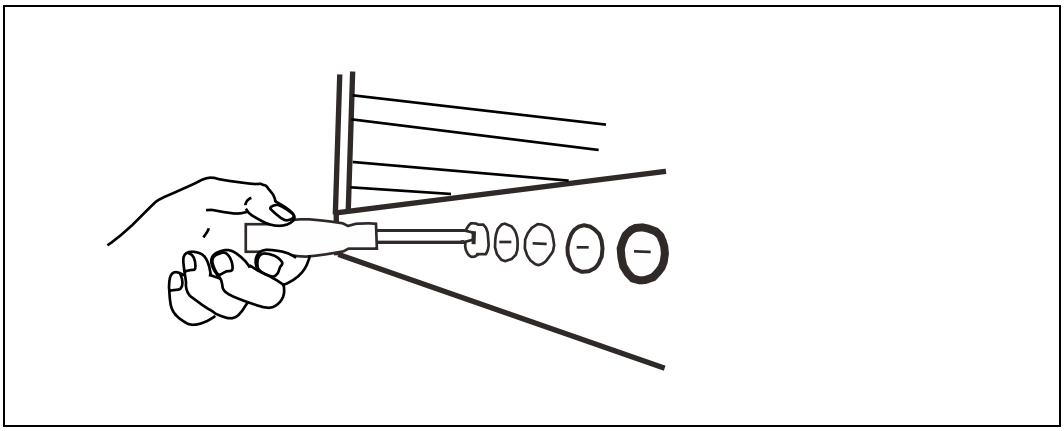

**3** The fuse slides out of the back of the case.

# Wiring alarms for RMBs

Figure 7.11 shows the alarm connections on the cabinet.

**Figure 7.11 External alarm connections**

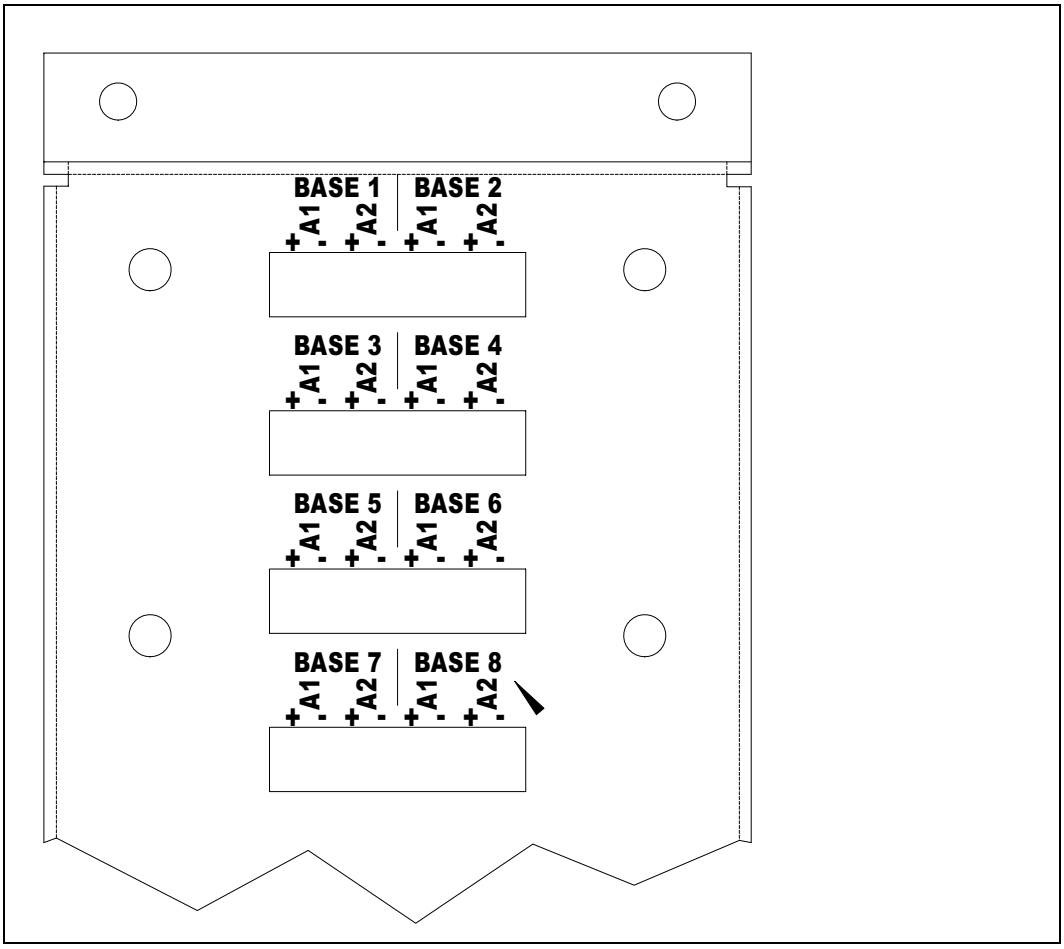


# Connecting to the backbone network

Typically, base stations connect to a level 2 switch, which is also installed on the rack. The switch controls the base station data traffic to and from the backbone network.

Connect the switch to the backhaul network using the appropriate cabling.

CHAPTER

# 8

# TESTING AND MANAGING THE NETWORK

## Chapter overview

This chapter describes how to test the network before the network is used by ISPs. The chapter also provides an overview of network management tasks.

## Testing the setup overview

This section provides an overview of the steps that help network access providers test the setup of the network before the network is rolled out.

To test the network setup:

1. Install and configure the AP server, as described in this guide.
2. Install and configure the base station, as described in this guide.
3. Power the base station, as described in this guide.
4. Work with the ISP to install the ISP's provisioning server
5. Test the connection between the AP server and the ISP provisioning server.
6. Ensure that CPEs can access the ISP's VLAN.

Steps 4 through 6 are described in the sections that follow.

### Installing the ISP's provisioning server

The provisioning server on the ISP VLAN contains a record for each CPE used by the ISP's subscribers.

The ISP is responsible for installing and configuring the provisioning server, and for adding CPE records to the CPE database on the provisioning server.

For information about installing and using the provisioning server, refer to the guide, "Configuring and monitoring the ISP network."

As a network access provider, you must work closely with the ISP to ensure the server is set up correctly and is operating with the network access provider's control VLAN.

## Testing the connection between the AP server and the provisioning server

To make sure that the AP server and the provisioning server are communicating:

1. On the provisioning server, open the home page of the provisioning server interface.

   For more information about the provisioning server, refer to Chapter 2, "Working with the provisioning server" in the guide "Configuring and monitoring the ISP network."

2. On the home page, check the Access Provider Connection group. The **Status** field shows if the provisioning server and the AP server are connected.
3. To refresh the status, click the **Refresh Status** link.

## Ensuring CPE access to ISP VLAN

Use an indoor CPE to test CPE access to the ISP's VLAN.

To ensure that CPEs can access the ISP VLAN:

1. Make sure the ISP has integrated their customer relationship management (CRM) application with the provisioning server and the server's CPE database. Use the CRM application to add a CPE to the CPE database on the provisioning server.
2. Install and power up the indoor CPE as described in the guide "Expedience Broadband Wireless Access Modem". This guide describes how to set up the CPE and scan for service. During installation, the CPE attempts to register with the base station on which you are performing the test.
3. If the AP server recognizes the base station's zone (as defined in the section "set system location" on page 5-41) the AP server forwards the request to the proper ISP, that is the ISP that is being tested.
4. The ISP's provisioning server recognizes the CPE in the CPE database. Permission to access the ISP network is granted to the CPE.
5. Once the CPE has received permission to access, the indication lights on the CPE stop blinking and remain continuously lit. On the host computer attached to the CPE, you should be able to access web sites.

# Network management overview

This section provides an overview of the network management features. These features are grouped into the following categories:

- Fault isolation
- Performance management
- Configuration management
- Accounting

# Fault isolation overview

This section describes the fault isolation features of the network.

## Using SNMP server to receive and report trap information

The network access provider can use an SNMP management station. This station reports all abnormal system conditions. Based on the severity of the event, the SNMP management system issues visual, audio, email and paging alerts.

## Using Syslog to receive system information

The base stations and CPEs use Syslog to record system information to a remote Syslog server for processing. Network access providers configure which remote server will handle the Syslog messages.

The following levels of Syslog messages are supported: emergency, error, warning, notice, and debug.

## Using the AP server interface to monitor base station and ISP network activity

The network access provider can monitor network activity and diagnose network problems by using the AP server interface. This web-based interface allows service providers to monitor base station statistics such as the records that were successfully handled by the base station and how many requests for network access that the base station received.

Information about specific ISPs and how many requests for network access have been recorded for a specific ISP also appears in the AP server interface.

Network access providers can see detailed log files for all CPEs that were allowed network access and for CPEs that were denied network access. Details in the log files include the date of the network registration request, the base station with which the CPE is registered, and how many hosts the CPE is allowed to serve.

For more information about this feature, refer to "Monitoring ISPs and base stations" on page 3-25.

## Remote CPE diagnostics

For CPEs, ISPs can use the provisioning server interface to show information about CPEs such as their serial number, the host computers they serve, the IP addresses assigned to the host computers, and the base station that serves the CPE.

The provisioning server interface allows ISPs to establish an SNMP session with a specific CPE, in order to retrieve diagnostic information from the CPE. For more information about this feature, refer to the guide "Configuring and Monitoring the ISP Network".

Network access providers can also use the ElementManager or other SNMP tool to access information about a particular CPE.

# Performance management overview

This section describes the performance management features of the network.

## Using SNMP features to monitor network activity

The base station runs an SNMP agent supporting MIB-II and a NextNet Wireless enterprise MIB. The SNMP agent allows a standard way of managing the Expedience system.

The NetManage Element Management system (NetManage EMS) provides a complete set of management tools that allow network access providers to configure, manage, monitor and report on elements that make up their network. This tool, based on SNMPc, is customized for the Expedience network.

Alternatively, network access providers can use any SNMP interface (such as OpenView/ Netview) to perform system configuration and management tasks.

For CPEs, ISPs can use the provisioning server interface to show information about CPEs such as their serial number, the host computers they serve, the IP addresses assigned to the host computers, and the base station that serves the CPE.

# Configuration management overview

This section describes features that help you configure devices on your network.

## Using Telnet, terminal session, or web interface to configure and monitor base stations

In addition to using an SNMP interface to configure the base station, network access providers can use Telnet, a terminal session, or a web interface with the base station to view and change base station settings.

In addition to many operating system parameters that can be configured, the network access provider can display device statistics such as downlink and uplink traffic, buffer information, and the number of CPEs communicating with a base station.

For more information about these features, refer to the user guide "Using the NextNet Operating System (NNOS)".

## Using FTP in network management

The network access provider can use FTP to transfer files to a device, in order to maintain the operating system on the device. FTP is also used for over-the-air upgrades for CPEs.

# Accounting feature overview

This section describes a feature of the network that helps you bill the ISPs for their use of your network.

## Managing billing information

Network access providers can use network generated records about the number of CPEs that exist on an ISP's VLAN.

The records contain information about the total number of known CPEs on the ISPs VLAN, as well as the service level agreement assigned to the CPEs. Using this information, the network access provider can bill the ISP for network use according to the business relationship with the ISP.

APPENDIX

# A

# GPS STATUS CODES

## Appendix overview

This appendix describes codes that the GPS can generate. These codes are displayed on a hand-held device manufactured to work with the GPS. Use these codes to determine if the time output of the GPS is valid.

**Table A.1 GPS status codes and meaning**

| Code | Status | Meaning |
|---|---|---|
| 0 | DOING_FIXES | Receiver is navigating |
| 1 | GOOD_1SV | Receiver is limiting using one satellite |
| 2 | APPX_1SV | Approximate time |
| 3 | NEED_TIME | Start-up |
| 4 | NEED_INITALIZATION | Start-up |
| 5 | PDOP_HIGH | Dilution of precision too high |
| 6 | BAD_1SV | Satellite is unstable |
| 7 | 0SVs | No satellites usable |
| 8 | 1SV | Only 1 satellite usable |
| 9 | 2SVs | Only 2 satellites usable |
| 10 | 3SVs | Only 3 satellites usable |
| 11 | NO_INTEGRITY | Invalid solution |
| 12 | DCORR_GEN | Differential corrections |
| 13 | OVERDET_CLK | Overdetermined fixes |

NextNet
WIRELESS

APPENDIX

# B

# SUPPORTED FREQUENCY RANGES

## Appendix overview

This appendix provides reference information about the frequency ranges in which the equipment can operate.

## MMDS frequency range

MMDS stands for multichannel multipoint distribution service and is a system of transmitting signals through microwave. MMDS represents frequencies in the 2.5 to 2.686 GHz band.

Although initially used to transmit video signals, MMDS has gone through regulatory changes which allow licensees of the frequency range to engage in fixed, two-way digital transmissions. The MMDS frequencies are ideally suited for broadband delivery of data, voice, and Internet services.

Note that the MMDS band shares it range with the instructional television fixed service (ITFS) band. ITFS makes up the A, B, C, D and G blocks. Each block contains 4 channels. Blocks A through D occupy the contiguous space from 2500-2596 MHz and the G block occupies space from 2644 to 2680 MHz, alternating every other channel with the H block.

Although the Federal Communication Commission (FCC) did not auction licenses for the ITFS frequencies, operators often lease the ITFS frequencies. These leases are allowed as long as the operator transmits up to 40 hours of educational programming per week. Sometimes, MMDS is referred to as wireless cable.

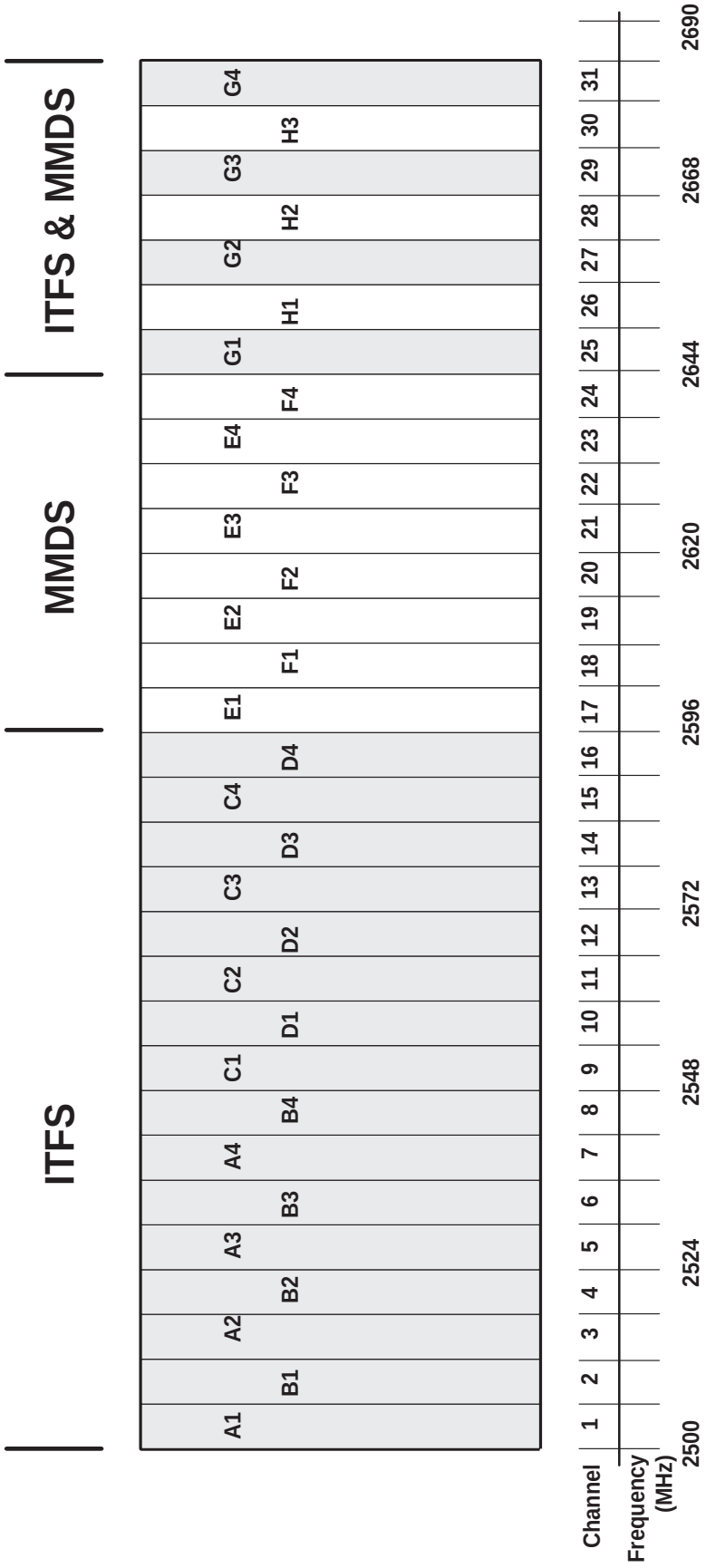
ITFS
MMDS
ITFS & MMDS
A1
A2
A3
A4
B1
B2
B3
B4
C1
C2
C3
C4
D1
D2
D3
D4
E1
E2
E3
E4
F1
F2
F3
F4
G1
G2
G3
G4
H1
H2
H3
Channel
1
2
3
4
5
6
7
8
9
10
11
12
13
14
15
16
17
18
19
20
21
22
23
24
25
26
27
28
29
30
31
Frequency (MHz)
2500
2524
2548
2572
2596
2620
2644
2668
2690

## 3.3 GHz frequency range

The Expedience system operates in the 3.3 GHz frequency range. For more information about channel assignments in this range, contact NextNet Wireless.

## 3.5 GHz frequency range

The Expedience system operates in the 3.5 GHz frequency range. For more information about channel assignments in this range, contact NextNet Wireless.

# Index


## A

AAA server *See* AP server
airlink
  enabling, 5-42
alarm
  triggered on RMB, 7-77
ancilliary equipment
  housing requirements, 1-9
antenna
  coaxial cable, 6-60
  connector, 6-60
  gain recommended, 1-9
  installation tips, 6-63
  lightning protection, 6-60
  planning installation, 1-9
  type used to transmit MMDS channels, B-89
AP server
  configuring, 3-16
  defining users and administrators, 3-16
  installing, 3-15
  overview, 1-4
  setting up redundant, 5-45
  standby, 4-27
  starting, 3-15
authority
  definitions, 5-44
  setting up local authority, 5-46
  setting up remote authority, 5-45
AUX +48 VDC connector, 6-58
AUX ETHERNET connector, 6-58

## B

backbone network
  connecting to, 6-64, 7-82
bandwidth
  increasing on the downlink, 5-39
base station
  connecting to TVS module, 6-58
  connectors, 6-55, 7-77, 7-78
  daisy chaining within cell, 6-64, 7-78
  mounting, 6-61
  power, 6-65, 7-73
  setting configuration parameters, 5-37
base stations
  starting term session, 3-26
battery backup connector
  RMB, 7-74
BTS
  installation overview, 1-6

## C

cabinet
  Ethernet cable connection, 7-80
cable
  coaxial cable, 6-60
  Ethernet/power, 6-57
  GPS inter-base station cable, 6-59, 7-78
  GPS interface cable, 6-59, 7-78
  serial interface, 6-60
cell wiring diagram
  for RMB, 7-72
channel number
  setting, 5-37
channels
  in MMDS frequencies, B-89
coaxial cable, 6-60
  jumpers recommended, 6-63
  maximum signal loss allowed, 6-63
configuration parameters
  setting before deploying base station, 5-37
connector
  data, 6-56
  Ethernet, 6-56
  GPS, 6-59
  ISP Ethernet in TVS module, 6-58
  power, 6-56
  serial interface, 6-60
  TVS module, 6-58
connectors
  supported by base station, 6-55, 7-78
CPEs
  how access is granted, 5-44

## D

daisy chain cable *see* GPS Inter-base station cable
daisy-chaining base stations, 6-64, 7-78
DHCP server equipment, 1-9
diagnostic cable
  connections, 7-79
documentation
  finding additional, preface-xv

## E

equipment
provided by service providers, 1-8
Ethernet
LED indicator, 7-77
Ethernet/power cable, 6-57
function of wires within, 6-57
splitting, 6-58
Expedience system
obtaining technical support for, preface-xvii

## F

fuses
replacing, 7-81
RMB, 7-80

## G

GPS
components of, 6-63
connecting to base station, 6-64
connector, 6-59
daisy-chained base stations, 6-64, 7-78
determining validity of output, A-87
exposure requirements, 6-64
interface cable, 6-59, 7-78
mounting pole and socket, 6-64
powering, 6-64
status codes, A-87
TDD impact, 1-8
time pulse generated, 6-63
used to generate time signal, 5-46
GPS inter-base station cable, 6-59, 7-78
grounding
RMB, 7-76

## H

Hyperterminal
using to configure base station, 5-32

## I

indoor/outdoor base station
overview, 1-2
inter-base station cable, 6-59, 7-78
ISPs
defining names, 3-22

## L

lightning protection, 1-9, 6-63
antenna, 6-60
supplied through TVS module, 6-58
links
selecting, 2-12
local authority
setting up, 5-46
LOS requirement elimination, 1-1

## M

MMDS frequency range
channels, B-89
mounting
brackets, 6-61
template, 6-61

## N

network access
setting up for CPEs, 5-44
NNOS web interface
setting base station configuration parameters, 5-37

## P

power supply
for RMB, 7-73
provisioning server
user interface
New User page, 3-20

## R

rack
attaching switch and power supply, 7-70
remote authority
setting up, 5-45
RMB
cell wiring diagram, 7-72
diagnostic cable, 7-79
Ethernet cable connection, 7-80
fuses, 7-80
grounding, 7-76
installation overview, 1-5
installing in cabinet, 7-70
LED locations and meaning, 7-77
overview, 1-2
power cable connectors, 7-79
power connectors, 7-74
power supply requirements, 7-73
wiring to cell, 7-71
RS-232 cable, 5-32

## S

serial interface
  cable, 6-60
  connector, 6-60
set airlink channel, 5-37
set airlink downlink power, 5-38
set airlink state, 5-42
set downlink bias, 5-39
SNMP server equipment, 1-9
SNMP session
  setting base station configuration
    parameters, 5-37
subscribers
  typical of the Expedience system, 1-1
Syslog
  setting up options, 5-43

## T

TDD, 5-46
technical support, preface-xvii
telnet access to base station, 5-32
telnet session
  setting base station configuration
    parameters, 5-37
terminal emulation
  access to base station, 5-32
  connection settings, 5-32
  setting base station configuration
    parameters, 5-37
terminal emulation connection
  settings, 5-32
time
  setting up on base station, 5-46
time signal
  external, 5-46
  internal, 5-46
transmit power level of base station, 5-38
TVS module, 1-6
  connectors, 6-58
typographical conventions
  overview, preface-xvi

## U

UPS
  sizing considerations, 6-65, 7-75

## W

weatherproof housing requirements, 1-8

## Z

zones
  defining, 3-21

NextNet
WIRELESS