NextNet WIRELESS

Configuring, Installing, and Operating Base Stations

MMDS Broadband Wireless Access System

Date: April 4, 2001
Part Number:104-0100-0001-A

Expedience is a trademark of NextNet Wireless.

©2000-2001 NextNet Wireless, Inc. All rights reserved.

NOTICE: This equipment has been tested with a 20 dB gain antenna and found to comply with the Radio Frequency Radiation Exposure Limits detailed below. A minimum of 1-meter separation between the installation/operator technician and the transmitting antenna should be maintained.

Radio Frequency Radiation Exposure Limits.

TABLE 1. Limits for Maximum Permissible Exposure (MPE)

Frequency range (MHz)	Electric field-strength (V/m)	Magnetic field-strength (A/m)	Power density (mW/cm 2)	Averaging time (minutes)
	(A) Limits for Occupational/Controlled Exposures			
0.3-3.0	614	1.63	*(100)	6
3.0-30	1842/f	4.89/f	*(900/f^2)	6
30-300	61.4	0.163	1.0	6
300-1500	—	—	f/300	6
1500-100,000	—	—	5	6
	(B) Limits for General Population/Uncontrolled Exposure			
0.3-1.34	614	1.63	*(100)	30
1.34-30	824/f	2.19/f	*(180/f^2)	30
30-300	27.5	0.073	.2	30
300-1500	—	—	f/1500	30
1500-100,000	—	—	1.0	30

f = frequency in MHz

* = Plane-wave equivalent power density

NOTE 1 TO TABLE 1: Occupational/controlled limits apply in situations in which persons are exposed as a consequence of their employment provided those persons are fully aware of the potential for exposure and can exercise control over their exposure.

Limits for occupational/controlled exposure also apply in situations when an individual is transient through a location where occupational/controlled limits apply provided he or she is made aware of the potential for exposure.

NOTE 2 TO TABLE 1: General population/uncontrolled exposures apply in situations in which the general public may be exposed, or in which persons that are exposed as a consequence of their employment may not be fully aware of the potential for exposure or can not exercise control over their exposure.

Note: This equipment has been tested and found to comply with the limits for a Class A digital device, pursuant to part 15 of the FCC rules. These limits are designed to provide reasonable protection against harmful interference when the equipment is operated in a commercial environment. This equipment generates, uses, and can radiate radio-frequency energy, and, if not installed and used in accordance with the installation manual, may cause harmful interference to radio communications. Operation of this equipment in a residential area is likely to cause harmful interference, in which case users will be required to correct the interference at their own expense.

THE SPECIFICATIONS AND INFORMATION REGARDING THE PRODUCTS IN THIS MANUAL ARE SUBJECT TO CHANGE WITHOUT NOTICE. ALL STATEMENTS, INFORMATION, AND RECOMMENDATIONS IN THIS MANUAL ARE BELIEVED TO BE ACCURATE BUT ARE PRESENTED WITHOUT WARRENTY OF ANY KIND. USERS MUST TAKE FULL RESPONSIBILITY FOR THEIR APPLICATION OF ANY PRODUCT.

NOTWITHSTANDING ANY OTHER WARRANTY HEREIN, ALL DOCUMENT FILES AND SOFTWARE ARE PROVIDED "AS IS" WITH ALL FAULTS. NEXTNET WIRELESS DISCLAIMS ALL WARRANTIES, EXPRESSED OR IMPLIED, INCLUDING, WITHOUT LIMITATION, THOSE OF MERCHANTABILITY, FITNESS FOR A PARTICULAR PURPOSE AND NONINFRINGEMENT OR ARISING FOM A COUSRE OF DEALING, USAGE, OR TRADE PRACTICE.

IN NO EVENT SHALL NEXTNET WIRELESS OR ITS SUPPLIERS BE LIABLE FOR ANY INDIRECT, SPECIAL, CONSEQUENTIAL, OR INCIDENTAL DAMAGES, INCLUDING, WITHOUT LIMITATION, LOST PROFITS OR LOSS OF DAMAGE TO DATA ARISING OUT OF THE USE OR INABILITY TO USE THIS MANUAL, EVEN IF NEXTNET WIRELESS HAS BEEN ADVISED OF THE POSSIBILITY OF SUCH DAMAGES.

NextNet
WIRELESS

CONTENTS

Preface About this guide

Preface Overview ..... **ix**

About this guide ..... **ix**
Chapters in this guide x

Additional documentation ..... **xi**
How to obtain additional documentation xi

Typographical conventions this guide uses ..... **xii**

Where to go for more help ..... **xiii**
Technical support xiii
Documentation additions and corrections xiii

Chapter 1 Introduction to base station installations

Chapter overview **1-1**

System overview **1-1**
Base station overview 1-2

Installation overview **1-3**

Planning the installation **1-4**
Choosing an installation location 1-4
Assessing service provider equipment needs 1-6
Planning for the antennas and antenna installation tips 1-6

Chapter 2 Configuring base stations

Chapter overview **2-7**

Before you begin **2-7**

Using Term or Telnet to help configure base stations **2-8**
Connecting through Telnet 2-8
Connecting through terminal emulation 2-9

Terminal emulation connection settings 2-9

Setting base station configuration parameters 2-9
set airlink channel number 2-10
set airlink downlink power 2-11
set downlink bias 2-11
set airlink state 2-12

Chapter 3 Installing base stations

Chapter overview 3-13

Before you begin 3-13

Cell wiring 3-14

Base station connectors 3-15
Ethernet (data) and power connector 3-15
Ethernet/power connecting cable 3-16
TVS module connectors 3-18
Base station to TVS connector 3-18
Power supply cable and ISP Ethernet network connector 3-18
GPS connectors 3-19
GPS connecting cable/Inter-base station connecting cables 3-20
Serial interface connector 3-21
Serial interface connecting cable 3-21
Antenna connector 3-21

Mounting the base station 3-21
Mounting the base station to a wall 3-22
Mounting the base station to a tower 3-23

Connecting the antenna to the base station 3-23
Antenna connection tips 3-23
Connecting the antenna to the base station 3-24

Connecting the GPS equipment to a base station 3-24
GPS equipment mounting tips 3-24
Connecting the GPS unit to the base station 3-25

Connecting to the backbone network 3-26

Powering base stations 3-26
Powering tips 3-26

Powering the base station 3-27

Verifying system operation 3-27

Appendix A Parts list

Appendix overview A-29

Appendix B MMDS frequency range

Appendix overview B-31

NextNet
WIRELESS

FIGURES

Preface About this guide

Chapter 1 Introduction to base station installations

Figure 1.1 Base station mounted on tower with antenna connection 1-2

Chapter 2 Configuring base stations

Chapter 3 Installing base stations

Figure 3.1 Cell wiring diagram 3-14
Figure 3.2 Base station connectors 3-15
Figure 3.3 Ethernet (data) and power connector 3-16
Figure 3.4 TVS module connector: Base station connector . 3-18
Figure 3.5 TVS module connector: Power/Ethernet connector 3-19
Figure 3.6 GPS connector 3-19
Figure 3.7 Serial interface connector 3-21
Figure 3.8 Base station mounting template 3-22

Appendix A Parts list

Appendix B MMDS frequency range

NextNet
WIRELESS

TABLES

Preface About this guide

Chapter 1 Introduction to base station installations

Table 1.1 Base station physical characteristics 1-3
Table 1.2 Advantages/disadvantages of location choices 1-5

Chapter 2 Configuring base stations

Table 2.1 Base station transmit power level 2-11
Table 2.2 Data transfer rate associated with set downlink bias command 2-12

Chapter 3 Installing base stations

Table 3.1 RJ-45 base station cable choices 3-16
Table 3.2 RJ-45 cable pins 3-16
Table 3.3 Function of wires in cable 597-6013-0xxx 3-17

Appendix AParts list

Table A.1 Parts list A-29

Appendix BMMDS frequency range

NextNet
WIRELESS

ABOUT THIS GUIDE

Preface Overview

Thank you for choosing the Expedience system from NextNet Wireless. This guide describes how to configure and install the system's base station component.

This preface describes:

- Audience for this guide
- Additional documentation
- Typographical conventions used in this guide
- Where to go for more help

About this guide

This guide describes how to configure and install the system's base station.

This guide is intended for network and system administrators who must install, configure, and manage base stations. This guide provides detailed configuration and installation instructions.

It is assumed readers of this guide are familiar with:

- Basic networking concepts
- Layer 2 (link layer) of OSI model
- Cell structure engineering

Chapters in this guide

Table i describes the chapters and appendices in this guide.

Table i Chapters and appendices in the guide

Chapter	Description
Preface	Provides an overview of the guide, related documentation, the guide's intended audience, typographical conventions, and methods for obtaining technical support.
Chapter 1 Introduction to base station installations	Provides an overview of the Expedience system and of the system's base station component. It provides an installation overview and describes things you need to consider before installing base stations.
Chapter 2 Configuring base stations	Describes how to configure base stations, including how to use Telnet or Term to set up a base station before deploying it and mounting it to a tower or building. The chapter also describes how to configure base stations after you have deployed them, for example, to maintain the system and optimize system performance.
Chapter 3 Installing base stations	Explains how to install a base station at a cell site. Also describes the components used to mount the base station on a building or tower.
Appendix A Parts list	Lists part numbers of system components that are related to base station installations

Additional documentation

If you cannot find the information you need in this guide, you may want to refer to the documents described in Table ii.

Table ii Additional documentation

Guide	Description
Getting Started with the Expedience System	Provides an overview of the Expedience system, its components, its network architecture, and options for selecting a deployment scheme for the system in your backbone network.
Using the NextNet Operating System (NNOS)	Describes the operating system commands you can use to configure and control the Expedience system, as well as the interfaces (command line and Web) that you can use to issue NNOS commands to base stations and CPEs.
Installing and using the CPE	Intended for use by your subscribers, this guide describes how to install a CPE at a subscriber site. The CPE is completely installable by your subscribers.
White paper	TBD

How to obtain additional documentation

These documents are available in hard copy format. You can also download documents from the NextNet Wireless web site. You need a user name and password to do so. To download the documentation:

1. Use your Internet browser to go to:

   www.nextnetwireless.com
2. On the home page, click the **Products** link.
3. On the page that appears, click the product name for which you want documentation.
4. Click the document link.
5. A list of documentation appears. To access the documentation file, click the title of the file you want to review.

Typographical conventions this guide uses

Table iii describes the typographical conventions that this guide uses.

Table iii Typographical conventions

Convention	Meaning
Bold face	If you are using a graphical user interface (GUI), bold face indicates a button, menu option, icon, and so on, that you manipulate directly. If you are using a command line interface, bold face indicates commands and keywords. Bold face can also indicate information that you must enter.
Italic face	Arguments for which you supply values are in italic face.
`Courier (mono-spaced) font`	A command you type in, exactly as it appears, at a command line.
[...]	Arguments that appear inside square brackets [ ], are optional. Also, when the guide shows a system prompt, the default system prompt appears inside square brackets.
{..} | {..}	Required keywords are grouped in braces and separated by vertical bars.
Note	Notes contain helpful suggestions for the reader.
<...>	Non-printing characters, such as passwords, appear in angle brackets.
Caution	Cautions contain information about which the reader must exercise care.
Warning	Warnings contain information about how readers might do something resulting in harm to themselves or in damage to equipment or data.

Where to go for more help

This section describes how to obtain support for your NextNet Wireless product. It also describes how to provide comments on the product documentation.

Technical support

NextNet Wireless is committed to providing our customers with high quality technical support. Table iv describes how to contact technical support.

Table iv Contacting technical support

Contact	Description
Phone	800.000.0000 (United States) 1.952.###.#### (Internationally)
E-mail	support@nextnetwireless.com
Web site	www.nextnetwireless.com

Documentation additions and corrections

If you find documentation errors, or want to see additional information not presented in this guide, please contact our documentation group at the following e-mail address:

techdocs@nextnetwireless.com

NextNet
WIRELESS

CHAPTER

1

INTRODUCTION TO BASE STATION INSTALLATIONS

Chapter overview

This chapter provides an overview of the Expedience system and of the system's base station component. It provides an installation overview. The chapter also describes things you need to consider before installing base stations.

System overview

NextNet Wireless designed the Expedience system to give small office, home office (SOHO), and residential subscribers high speed, wireless access to network communication systems, such as the Internet.

The Expedience system is an end-to-end broadband wireless access system for multichannel multipoint distribution service (MMDS) frequencies (2.5 - 2.686 GHz). The system is a local loop, wireless alternative that offers a last mile solution for packet data and voice.

The Expedience system consists of two equipment components: customer premise equipment (CPE) and base stations. You install base stations in sectors, within cells.

The system does **not** have a line-of-sight (LOS) requirement between the base station and the CPEs. The air link between base stations and CPEs functions as an Ethernet bridge carrying IP/ARP packets. Time division duplex (TDD) and

cellular deployment offer you flexibility in adjusting downlink versus uplink airtime.

For more system overview information, refer to the guide “Getting Started with the Expedience System.”

Base station overview

The base station maintains contact with CPEs at your subscribers’ sites. The base station integrates the transceiver and modem into one device.

From a transmitting tower, the base station can cover can approximate radius of 1 to 3 miles, with a 5 mile maximum. Figure 1.1 shows a base station.

Figure 1.1 Base station mounted on tower with antenna connection

Table 1.1 describes base station physical characteristics.

Table 1.1 Base station physical characteristics

Characteristic	Description
Dimensions	18.34 in. x 11.25 in. x 5.25in.
Weight	40 pounds
Temperature range	-30 C to 50 C
Heat load	If housed in environmentally controlled enclosure, heat load is 490 BTU/hour

Installation overview

This section provides a high-level overview of the base station installation process. Other sections in this guide then explain these installation tasks in detail.

The tasks you perform to deploy base stations are:

1. Choose an appropriate location for the base station installation. For more information, refer to the section, "Choosing an installation location" on page 1-4 in this chapter.
2. Plan for system components that you need to supply to complete the network. For more information, refer to the section, "Assessing service provider equipment needs" on page 1-6 in this chapter.
3. Configure the base stations, before deploying them in the field. For more information, refer to the chapter, in this guide.
4. Mount the base station at the site you selected. For more information, refer to the section, "Mounting the base station" on page 3-21 in this guide.
5. Connect the antenna to the base station, as described in the section, "Connecting the antenna to the base station" on page 3-23.
6. Mount the GPS device and connect it to the base station. One GPS device can service the multiple base stations at a cell site. For more information, refer to the section, "Connecting the GPS equipment to a base station" on page 3-24 in this guide.
7. Connect the base station to the transcient voltage suppressor (TVS) module, then connect the TVS module to your network switch.

   The TVS module splits the connection: one connection goes to a switch that connects to your network, and the other goes to a power supply. For more

information, refer to the section, “Connecting to the backbone network” on page 3-26 in this guide.

8 Power the base stations by connecting the TVS module to the power supply. For more information, refer to the section, “Powering base stations” on page 3-26 in this guide.

9 Before leaving the site, verify that the system is operating. For more information, refer to the section, “Verifying system operation” on page 3-27 in this guide.

Planning the installation

This section describes issues you need to consider before you install the base stations, including:

- Location considerations
- Service provider equipment components

Choosing an installation location

The base station’s location at a site depends on many factors, including the site’s physical environment, the coverage pattern you want to achieve, and the ease of

maintenance you require. Table 1.2 describes some of the locations you might want to consider.

Table 1.2 Advantages/disadvantages of location choices

Location	Advantages	Disadvantages
On tower, at antennas	Installing at the antennas offers cost savings, due to the fact that you can use a shorter coaxial cable to connect the base stations to your cells. This also offers the ability to transmit at higher power levels, since there is lower signal loss in shorter cables.	When you install base stations near the top of the tower, installation and maintenance are more difficult.
At base of tower	Placing the base stations at the base of a tower offers simpler installation and maintenance than a base station installed on the tower, at the antennas. Base station installation and maintenance are simpler than other options;	If you install at the base of the tower, you need to run a coaxial cable from the base stations to the cells. This cable must be of sufficient size to reduce signal loss, which may increase costs. Installation still requires you to install the antennas and coaxial cable.
On rooftop	You can use a shorter coaxial cable to connect base stations to cells. As such, you can probably operate at higher power levels, and still stay within signal loss criteria. Rooftop access is usually available, making installation and maintenance easier. Also, a housing unit for the backbone network switch, power supplies, and other equipment is typically available.	You need to obtain permission to use a rooftop, and comply with building codes.

Note: Regardless of the location you choose, plan to provide a weatherproof housing unit for the network switch, the power supply, and the TVS equipment.

Assessing service provider equipment needs

The Expedience system supplies the base stations, the CPEs, and an Ethernet cable that connects the CPE to the subscriber's PC or LAN network interface card (NIC).

Before you install and deploy the base station, ensure you have made provisions for the following components:

- Power and data connection between the base station and your network
- Domain name server (DNS), DHCP server, SNMP server, and authentication, authorization, and accounting (AAA) server
- Global position system (GPS) for proper TDD functions. You must use the GPS supplied with the Expedience system.
- Antenna system for transmitting and receiving signals for the base stations.
- Weatherproof housing for the backbone network switch, power supplies, UPS, and lightning protection.
- Co-axial cable to connect the base station to the panel antenna.
- Tower or building structure on which to mount cell site equipment.

Planning for the antennas and antenna installation tips

The type of antenna you choose depends on the cell type and pattern you want to use. Make sure:

- The antenna is a high-gain antenna, at least 20dBi, or higher.
- The installation of the antenna complies with the vendor's installation directions, and that it meets building codes.

After you have installed an antenna, you need to connect it to a mounted base station. For instructions on connecting the antenna to a base station, refer to the section, "Connecting the antenna to the base station" on page 3-23.

CHAPTER

2

CONFIGURING BASE STATIONS

Chapter overview

This chapter describes how to configure base stations. It describes:

- How to configure base stations before you deploy them.
- How to configure base stations after you have deployed them, for example, to maintain the system and optimize system performance

Before you begin

To configure base stations before you deploy them on towers or buildings, you must first supply power to the base station, and connect the base station to a PC or laptop using the serial cable/serial connection. To perform these tasks:

1. Plug one end of the base station-to-TVS cable into the base station. Plug the other end into the TVS module. Then, plug the TVS module into a power source.
2. Use the serial interface cable to connect your management station to the base station to enable communication between the devices.
3. On your computer, start a terminal emulation or Telnet session with the base station you want to configure.
4. Configure the base station using the parameters described in the section "Setting base station configuration parameters" on page 2-9 in this guide.

Using Term or Telnet to help configure base stations

The base station supports the following methods of configuration and management:

- SNMP server
- Web server
- Telnet, terminal emulation over a serial line

To configure the device initially, you will most likely use a serial connection and a terminal emulation session.

- Telnet allows access to the base station through remote access over the Ethernet network using the base station's IP address.
- Terminal emulation allows access through a direct RS-232 connection from a personal computer to the base station.

Before you mount a base station, it is recommended that you use the terminal emulation connection to assign a name to the base station.

Connecting through Telnet

To use Telnet, the base station's IP address must be known, or referenced through the base station's name stored on a domain name server (DNS).

Before installing a base station, it is recommended that you use the terminal emulation serial connection (described in the section that follows) to assign a name to the base station, for example "Cell2Sector4." Assigning the base station a name makes it easier for you to identify devices in the network.

When you implement the base station in your network, the base station acquires an IP address from a DHCP server on your network. After receiving the IP address, the base station supplies the now associated name and assigned IP address to DNS.

Note: During initial set up of your equipment, you can use a DHCP server on your network to assign the base station an IP address, or you can set the address manually. For more information, refer to the guide "Using the NextNet Operating System (NNOS)."

Connecting through terminal emulation

The terminal emulation connection is a physical RS-232 cable connection, between the base station and a PC. Once the connection is made, you can use a program such as Hyperterminal under the Windows operating system to configure and communicate with the station.

Before installing a base station, it is recommended that you assign the base station a name, using terminal emulation and the "set name" and "set location" commands in NNOS. Assigning a name makes it easier for you to identify the device in the network. Also, depending on IP lease time, an IP address can change each time you power on the base station or reset it.

Terminal emulation connection settings

To set up a terminal emulation connection, use these settings:

- 19.2 baud
- 8 data bits
- No parity
- 1 stop bit
- no flow control

Setting base station configuration parameters

This section describes configuration parameters you must set for proper base station functioning.

You can use Telnet, terminal emulation, the NNOS web interface, or an SNMP session to configure the parameters on the base station.

When setting up the base station, you must:

1. Set the following parameters, in the order that follows:
   - set airlink channel number
   - set airlink power
   - set airlink downlink bias
   - set airlink state
2. After setting the parameters, use the write command to write the settings into the flash, non-volatile memory.

3 For your changes to take effect, perform **one** of the following:

- Re-boot the base station

  --OR--

- Power down the base station, and then re-power it.

For more information about these configuration parameters, as well as a full list of configuration parameters, refer to the guide "Using the NextNet Operating System."

set airlink channel number

Set this configuration parameter to the channel on which you want to run the airlink. The channel range for ITFS and MMDS frequencies is 1-31. For an illustration of the channels, refer to Appendix B.

Example: **`set airlink channel number 15`**

set airlink downlink power

This parameter specifies the base station's transmit power level. Specify a power value from 0 to 31.

The maximum system power level is 10, which specifies +33 dB at 2 watts. The other power levels are measured in 1 dB steps from the maximum.

Example: **`set airlink downlink power 10`**

Table 2.1Base station transmit power level

Power value	Power level
10	+33 dBm or 2.0 watts
.	
.	
13	+30 dBm 1.0 watt
.	
.	
16	+27 dBm 500 milliwatts
.	
.	
23	+20 dBm 100 milliwatts
.	
.	
31	+12 dBm 15.8 milliwatts

set downlink bias

This parameter specifies the portion of airtime (slots) available for use on the downlink relative to the airtime for the uplink. There are always 6 slots available for the uplink.

The higher the bias, the more bandwidth is available for the downlink, due to more time allocated to the downlink.

Example: **`set airlink downlink bias 9`**

You must specify the same downlink bias for all base stations in a cell. Likewise, all base stations within your system, regardless of the cell they are in, must have the same downlink bias.

Table 2.2 Data transfer rate associated with set downlink bias command

Bias number variable	Downlink slots available*	Downlink rate (bps)	Uplink rate (bps)
0	6 downlink slots	1,364,496	1,249,920
1	9	1,747,872	1,028,160
2	14	2,157,216	794,880
3	17	2,325,024	699,840
4	20	2,456,440	624,960
5	23	2,562,112	564,480
6	29	2,718,464	472,320
7	33	2,798,976	426,240
8	37	2,868,480	388,800
9	41	2,924,416	357,120
10	54	3,055,248	282,240
11	61	3,103,232	253,440
12	67	3,140,208	233,280
13	73	3,170,400	216,000
14	80	3,198,840	198,720
15	90	3,236,400	178,560

***Note:** There are always 6 slots available for the uplink.

set airlink state

This parameter enables the airlink.

After you specify the set airlink channel number, set airlink downlink power, and set downlink bias parameters, you must set the airlink state to enabled, for your changes to take effect.

Example: **`set airlink state enabled`**

You can take the base station off the air by disabling the airlink.

CHAPTER

3

INSTALLING BASE STATIONS

Chapter overview

This chapter describes how to install base stations. It describes:

- Components used to mount the base station on a building or tower.
- Connecting the base station to the cell and to cell-site components

Before you begin

Before you install a base station on a roof top or tower:

- It is recommended that you assign a name to the base station. For more information refer to Chapter 2, "Configuring base stations," in this guide.
- It is also a good idea to configure the base station.

Cell wiring

Figure 3.1 shows how a cell, base stations, and ancillary equipment are wired together.

Figure 3.1 Cell wiring diagram

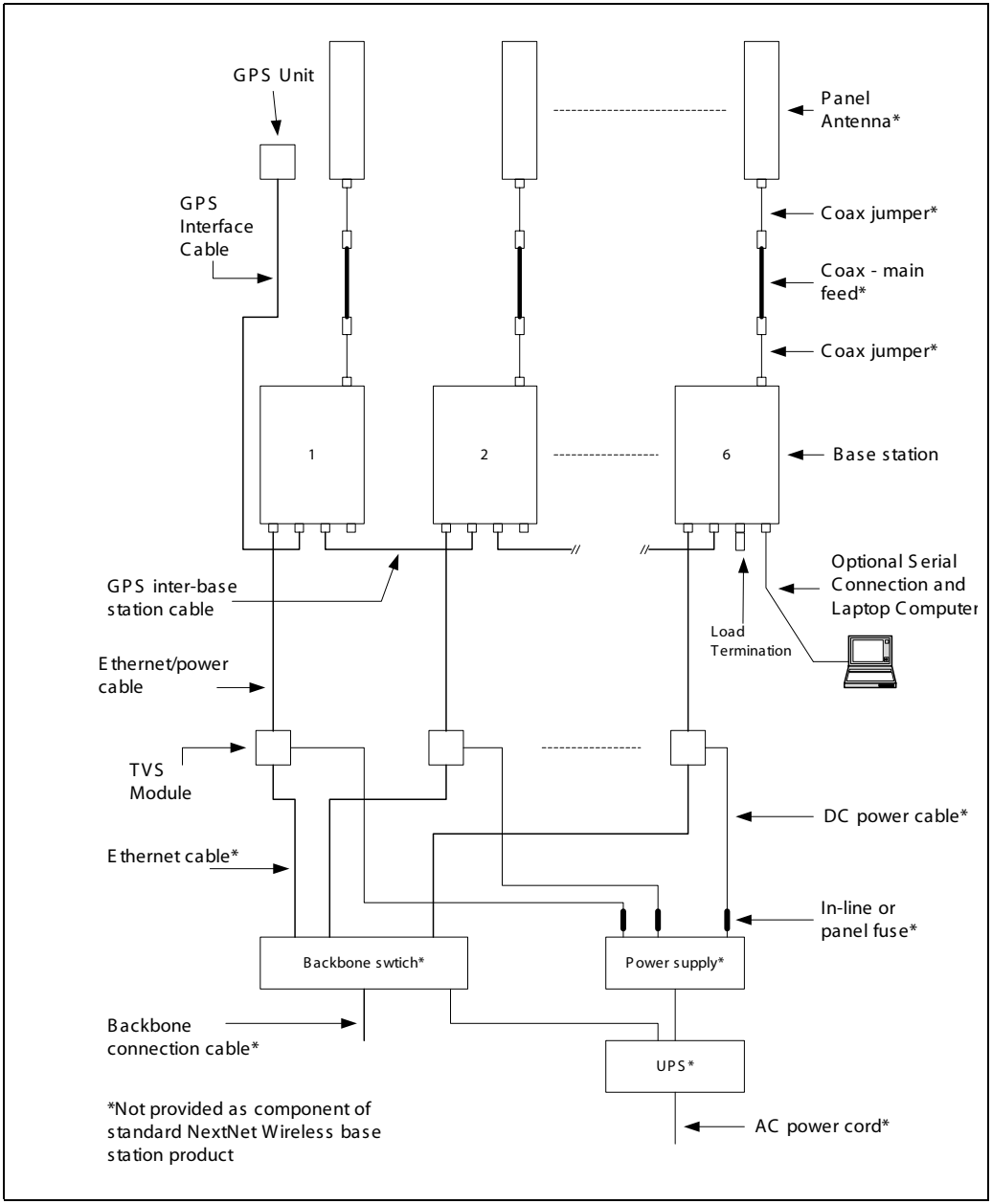

Base station connectors

Figure 3.2 shows the connectors that the base station supports.

Figure 3.2 Base station connectors

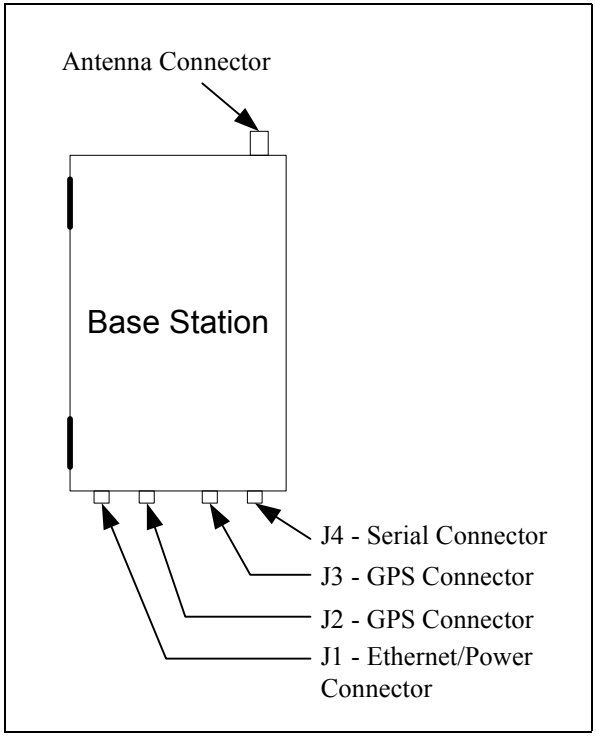

Ethernet (data) and power connector

The Ethernet and power connector supplies data and DC power to the base station. The circular connector has 8 pins:

- Ethernet transmit uses 2 pins.
- Ethernet receive uses 2 pins.
- Power ground uses 2 pins
- Power V+ uses 2 pins.

Figure 3.3 shows the pins of the Ethernet and power connector on the base station, looking at the connector on the base station.

Figure 3.3 Ethernet (data) and power connector

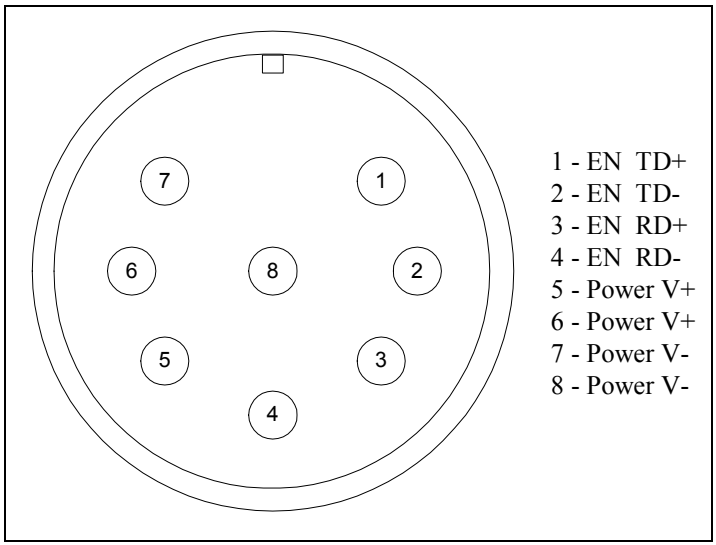

Ethernet/power connecting cable

Depending on your needs, you can order any of the following cables to connect the base station to the TVS module.

Table 3.1 RJ-45 base station cable choices

Cable part number	Length (feet)
597-6013-0010	10
597-6013-0025	25
597-6013-0050	50
597-6013-0100	100
597-6013-0200	200

Table 3.2 describes the pins of the RJ-45 cable (the Ethernet/power cable) that connects the base station to the TVS device.

Table 3.2 RJ-45 cable pins

Pin	Connection
1	Tx+
2	Tx-
3	Rx+

Table 3.2 RJ-45 cable pins

Pin	Connection
4	Rx-
5	+48 VDC
6	+48 VDC
7	-48 VDC
8	-48 VDC

Table 3.3 describes the color and function of the wires in cable 597-6013-0xxx.

Table 3.3 Function of wires in cable 597-6013-0xxx

Wire color	Wire function
White/orange	Tx+ Ethernet
Orange	Tx- Ethernet
White/green	Rx+ Ethernet
Green	Rx- Ethernet
Red	+48 VDC
Red/white	+48 VDC
Black	-48 VDC
Black/white	-48 VDC

TVS module connectors

The TVS module has connectors on both its right and left sides.

Base station to TVS connector

The base station connector supplies power and an Ethernet connection to the base station. Connect cable 597-6013-0xxx to this side of the TVS module.

Figure 3.4 TVS module connector: Base station connector

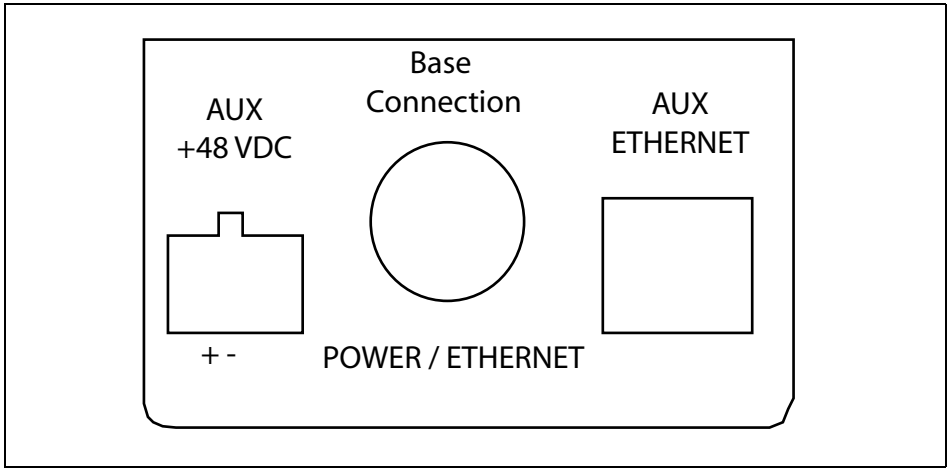

Note: Use the AUX +48 VDC and AUX ETHERNET connections only if you need to cut off the circular connector from the power/Ethernet cable (597-6013-0xxx). For example, if you need to route the cable through a wall at your installation site, you will not use the circular connector. Instead, you will split the cable and put a 6-pin, RJ-11 connector on some wires, and a power connector on others. Then, you will plug the appropriate connector from the split cable into the corresponding connector in the TVS module. Table 3.3 describes the wires in the cable.

Power supply cable and ISP Ethernet network connector

The other side of the module has a connector for both an Ethernet cable coming from your ISP network and for the +48 VDC power coming from a power supply.

Note: To ensure your base station is properly protected from possible lightning strikes, ensure you plug the power cable coming from your power supply into this connector in the TVS module. If you plug the power cable into the

base station connector side, the base station will power up, but you will NOT be properly protected against possible lightning strikes.

Figure 3.5 TVS module connector: Power/Ethernet connector

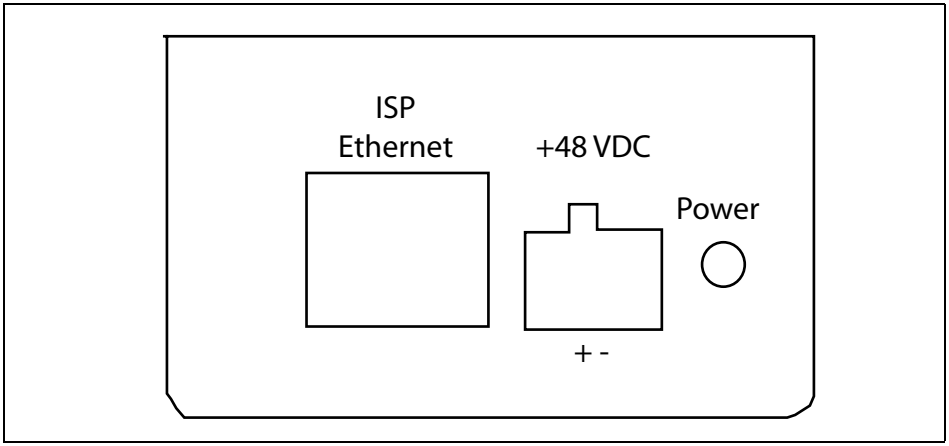

GPS connectors

The base station supports two GPS connectors: one connector is used to supply the GPS signal, either by a direct connection to the GPS device, or by a daisy chain connection to another base station in the cell. The other GPS connector is used to make a daisy-chain connection from the current base station to the next base station.

Figure 3.6 GPS connector

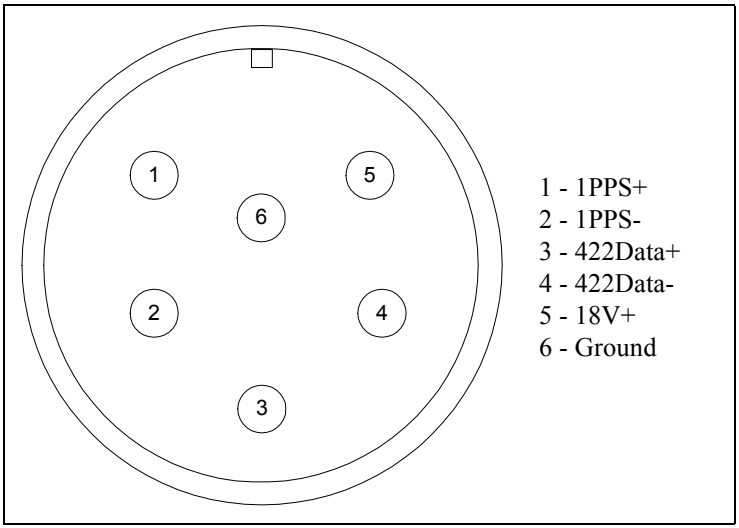

An RS-422 line feeds 1PPS+ and 1PPS- with the time synchronization pulse from the GPS equipment to the base station.

An RS-422 line also feeds 422Data+ and 422Data-, to allow data communication from the GPS device to the base station. Currently, this is one-way communication, with the GPS device giving the base station time information.

The 18V+ and ground pin supply power to the GPS device from the base station. The GPS device uses 18 volts DC at 150 milliamperes.

GPS connecting cable/Inter-base station connecting cables

You need one GPS device per cell. You then directly connect one base station within that cell to the GPS device. Next, the other base stations are connected to each other, using a daisy chain wiring scheme, so that all base stations in the cell can receive a GPS signal.

You can choose the length of the cable that connects the base station to the GPS receiver.

- The cable that comes standard in the base station site installation kit is 100 ft (part number 597-6011-0100).
- If desired, you can use a shorter cable to connect the base station to the GPS receiver. This alternate cable is 25 ft (part number 597-6011-0025).

You can also choose the length of the daisy-chain cable that connects one base station to another base station.

- The standard cable shipped in the base station installation kit is 3 ft (part number 597-6012-0003).
- If desired, you can use a longer cable to connect one base station to another. This cable is 10 ft (part number 597-6012-0010)

If you need to remove a base station for service, you can use the longer, 10 ft. cable to jumper the GPS cables together, and continue cell operation.

The last base station in the daisy chain requires a load termination to be connected to the GPS connection. This base terminator plug is 100 ohm (part number 515-6005-0001).

Serial interface connector

For base station configuration, the serial interface connector lets you directly connect the base station to a PC or laptop. The six-pin connector is an RS-232 cable (10 ft), physical interface.

Figure 3.7 Serial interface connector

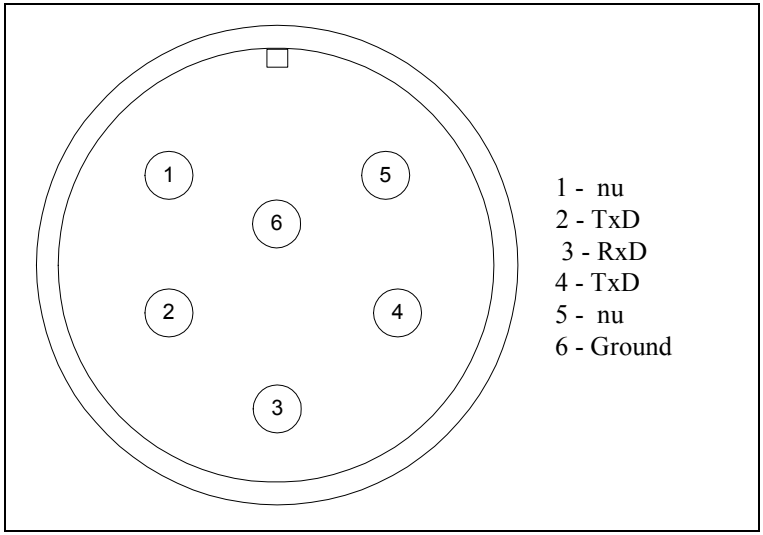

Note: "nu" indicates that the pin is not used.

Serial interface connecting cable

Cable 597-6014-0010 has a female, circular connector on one end, and a DB-9 female connector on the other end. Plug the DB-9 end of the cable into your PC or laptop. Plug the other end of the cable into the serial interface connector.

Antenna connector

The antenna connector is a type N female connector. It has a built-in, internal 1/4 wave stub lightning protector. Connect the base station to the antenna using a coaxial cable. Connect the proper lightning ground wiring to the antenna lightning protector.

Mounting the base station

You can mount the base station to any surface. To mount the base station to a wall, you need to use the supplied mounting brackets. If you are installing the base

station on a tower, you need to use mounting plates, which you need to acquire from another equipment supplier.

Mounting the base station to a wall

To mount the base station to a wall:

1. Find a surface suited to base station installation.
   a. Plan to install the base station vertically, so the antenna connector is at the top (facing skyward), and the other circular connectors are at the bottom (facing the ground).
   b. Make sure the area above and below the location where you want to install the base station has a good distance for clearance. This clearance allows for proper air circulation and heat flow from the heat sink fins on the back of the base station. The clearance also allows for the coaxial cable and the other cable connections.
2. Drill mounting holes into the surface, according to the dimensions shown in Figure 3.8.

Figure 3.8 Base station mounting template

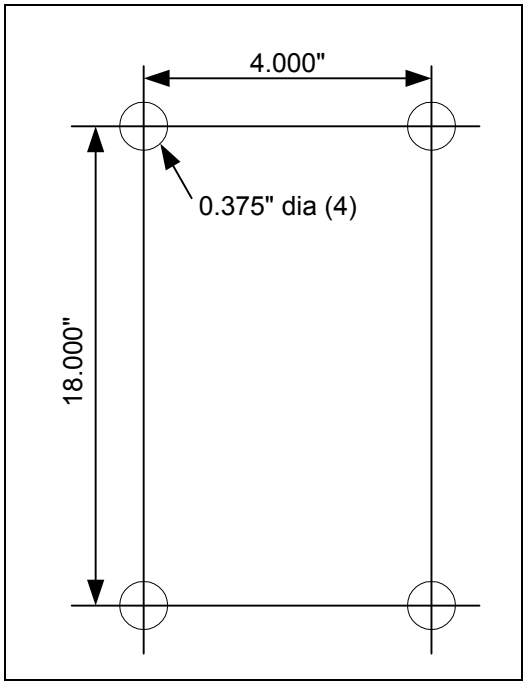

3. To attach the base station to a wall, use the mounting brackets. Install them on the base station first, then attach the brackets to the wall. To attach the brackets

to the base station, use 5/16 inch x 18 inch UNC thread bolts and a lock washer. Use your own bolts to then attach the bracket to the surface.

Mounting the base station to a tower

Use the tower connecting plate to attach the base station to a tower. To mount the base station on a tower:

1. Find a place on the tower that is suited to base station installation.
   a. Plan to install the base station vertically, so the antenna connector is at the top (facing skyward), and the other circular connectors are at the bottom (facing the ground).
   b. Make sure the area above and below the location where you want to install the base station has a good distance for clearance. This clearance allows for proper air circulation and heat flow from the heat sink fins on the back of the base station and for cable connections.
2. If you are installing the base station to a tower, you must use mounting plates. Attach the plates to the base station, then attach the mounting plates to the tower according to the directions from the plate manufacturer.

Connecting the antenna to the base station

This section provides tips you can use to connect the antenna to the base station. It also provides step-by-step instructions for connecting the components to each other.

Antenna connection tips

Use the following tips when connecting the base station to the antenna:

- You connect the antenna to the base station using a coaxial cable. The size of the cable depends on the distance between the base station and the antenna.
  - The greater the distance, the larger your coaxial cable needs to be, in order to maintain low signal loss.
  - It is recommended that you keep signal loss to a minimum. At a maximum, the signal loss should be no more than 2 to 3 dB, including all coaxial cable and connectors.
- Use short coaxial jumpers from the base station to the main coaxial line, and from the main coaxial line to the antenna. It is recommended you use 1/2 inch

flexible line, of the shortest length possible, while still allowing the flexibility to make a good connection.

- The base station contains an antenna connector with a 1/4 inch wave stub lightning protector. You do not need to place an external lightning protector in the coaxial cable.

Connecting the antenna to the base station

To attach the antenna to the base station:

1. Mount the antenna according to the manufacturer's instructions.
2. Connect one end of a short coaxial jumper to the antenna. Connect the other jumper end to the main coaxial cable.
3. On the base station's antenna connector, connect one end of a short coaxial jumper. Connect the other jumper end to the main coaxial cable coming from the antenna.
4. Make sure the coaxial line is properly grounded.
5. Properly seal the co-axial connections with weatherproof components, tape and wrap.

Connecting the GPS equipment to a base station

The GPS equipment provides a time synchronization signal to the base station. This signal is needed to ascertain the proper timing for time division duplexing (TDD).

The equipment — supplied by NextNet and manufactured by Trimble Navigation Limited — is a smart antenna in a sealed, shielded, self-contained unit that houses a GPS receiver, GPS antenna, and interface circuitry. A lightning protector is also supplied.

When powered, the GPS provides accurate time, with a time pulse of one pulse per second, synchronized to Universal Time, Coordinated (UTC) within 150 nanoseconds.

GPS equipment mounting tips

You must use the supplied Trimble GPS system to supply a time synchronization signal to the base stations in a cell. You cannot use a GPS from another manufacturer.

The GPS and lightning protector do not ship with mounting accessories. You can obtain these accessories from many suppliers around the world, especially distributors of marine products.

Follow these tips when mounting the GPS:

- Mount the GPS unit on a threaded pipe or pole.
- The GPS mounting socket accepts a 1.0000 x 14 straight thread. It is recommended that the pole/pipe you use be 1.000 inch.
- Secure the pipe or pole to the building or other support structure.
- You must install lightning protection equipment. It is recommended that the lightning protector be installed at the smart antenna end of the time source interface cable. You must then directly connect the protection ground wire to a properly grounded equipment chassis or antenna mast.
- Ensure at least half of the sky is clearly visible to the unit.
- Expose the unit to the southern portion of the sky. GPS satellites move generally from the southwest to the northeast.

Connecting the GPS unit to the base station

One GPS unit can support numerous base stations in the same cell.

Use the GPS-to-base station cable to attach the GPS unit to one of the base stations in the cell.

To connect the cable to the GPS unit and to the base station (both of which have already been installed and mounted):

1. Connect the cable's molded, circular female connector to the GPS unit.
2. Install the lightning protection equipment. It is recommended that the lightning protector be installed at the smart antenna end of the time source interface cable. You must then directly connect the protection ground wire to a properly grounded equipment chassis or antenna mast.
3. After connecting the cable to the GPS unit, run the cable to the base station. Plug the cable's other end into the base station's GPS connector.
4. Secure the cable that you just ran to an appropriate support structure. Coil and tie any excess cable.
5. The GPS unit receives its power from the base station. The base station supplies power to the GPS device, which uses 18 volts DC at 150 milliamperes.
6. So that the remaining base stations in the cell can receive a GPS signal, connect a base station adjacent to the base station you just connected to the GPS unit.

Continue to use the daisy chain wiring scheme to connect the remaining base stations, until all of the base stations within the cell are connected to each other.

On the last base station in the daisy chain, connect the load termination on the open GPS connection.

Connecting to the backbone network

The base station connects to a TVS module. You then connect the TVS module to your network. Typically, base stations connect to a level 2 switch at the cell site, using a 10BaseT connection. The switch controls the base station data traffic to and from the backbone network.

Connect the switch to the backhaul network using the appropriate cabling.

Powering base stations

This section describes tips for powering base stations, as well as the component connection sequence you need to use to properly power base stations.

Powering tips

- It is recommended that you use a redundant power supply for base stations.
- Each base station requires 48 volts DC at 3.0 amps maximum
- Depending on the type of equipment you own, supply power to the Ethernet switch and backbone network equipment.
- It is recommended that you use an uninterruptable power supply (UPS).

  Tips for sizing the UPS include:

  - Size the voltage and amperage of the power supply according to the number of base stations at your cell site.
  - Size the UPS according to the efficiency of the DC power supplies and power requirements of the other ancillary equipment, such as the Ethernet switch and backbone network equipment.
  - Consider the time you want to allow the system to operate on the UPS.

Powering the base station

The base station does not have a power switch. Rather, it receives its power when the UPS, power supply, and TVS module are connected to the base station through the Ethernet/power cable.

To connect the base station to a power supply, connect these components in the order that follows:

1. Connect the base station to the antenna.
2. Connect the GPS to a base station, and use a daisy chain wiring scheme to connect the other base stations.
3. Connect the base station to the TVS module using the Ethernet/power cable of the desired length.
4. Use an Ethernet cable to connect the TVS module to the network. Use a standard DC power cable to connect the TVS module to the power supply.
5. Connect the power supply to the UPS.
6. Connect the UPS to an AC power supply.

Verifying system operation

Before you leave the cell site, make sure the system is operational. To do so:

1. TBD
2. TBD
3. TBD

APPENDIX

A

PARTS LIST

Appendix overview

This appendix provides you with part numbers for the base station and for the system components which support the base station.

Table A.1 Parts list

Component	Part number
Base station	123-0100-1000
Base station mounting bracket	123-0100-0130
TVS module	123-0100-0125
"Configuring, Installing, and Operating Base Stations" manual	104-0100-0001-A
Base station site installation kit, which includes:	123-0100-0135
GPS unit	450-0010-2000
GPS lightning protector	450-0010-2001
Base station terminator plug (100 ohm)	515-6005-0001
Base-to-base daisy chain cables (5 cables, 3 ft. each)	597-6012-0003
Base to GPS receiver cable, 100 ft.	597-6011-0100
Serial interface cable, for base station programming, 10 ft.	597-6014-0010

Table A.1 Parts list

Component	Part number
Base station power/Ethernet cable. Depending on your needs, the following lengths are available:	
Base station power/Ethernet cable, 10 ft.	597-6013-0010
Base station power/Ethernet cable, 25 ft.	597-6013-0025
Base station power/Ethernet cable, 100 ft.	597-6013-0100
Base station power/Ethernet cable, 200 ft.	597-6013-0200
Base station site power supply kit, which includes:	123-0100-0140
3 power supply modules	420-0100-0500
19 inch rack mounting chassis	420-0100-0501
Cable alternatives	
Base station to GPS receiver, 25 ft.	597-6011-0025
Base station to GPS receiver, 100 ft.	597-6011-0100
Base-to-base daisy chain cable, 3 ft.	597-6012-0003
Base-to-base daisy chain cable, 10 ft.	597-6012-0010

APPENDIX

B

MMDS FREQUENCY RANGE

Appendix overview

This appendix provides reference information about the MMDS frequency range.

MMDS stands for multichannel multipoint distribution service and is a system of transmitting signals through microwave. MMDS represents frequencies in the 2.5 to 2.686 GHz band.

Although initially used to transmit video signals, MMDS has gone through regulatory changes which allow licensees of the frequency range to engage in fixed, two-way digital transmissions. The MMDS frequencies are ideally suited for broadband delivery of data, voice, and Internet services.

Note that the MMDS band shares its range with the instructional television fixed service (ITFS) band. ITFS makes up the A, B, C, D and G blocks. Each block contains 4 channels. Blocks A through D occupy the contiguous space from 2500-2596 MHz and the G block occupies space from 2644 to 2680 MHz, alternating every other channel with the H block.

Although the Federal Communication Commission (FCC) did not auction licenses for the ITFS frequencies, operators often lease the ITFS frequencies. These leases are allowed as long as the operator transmits up to 40 hours of educational programming per week. Sometimes, MMDS is referred to as wireless cable.

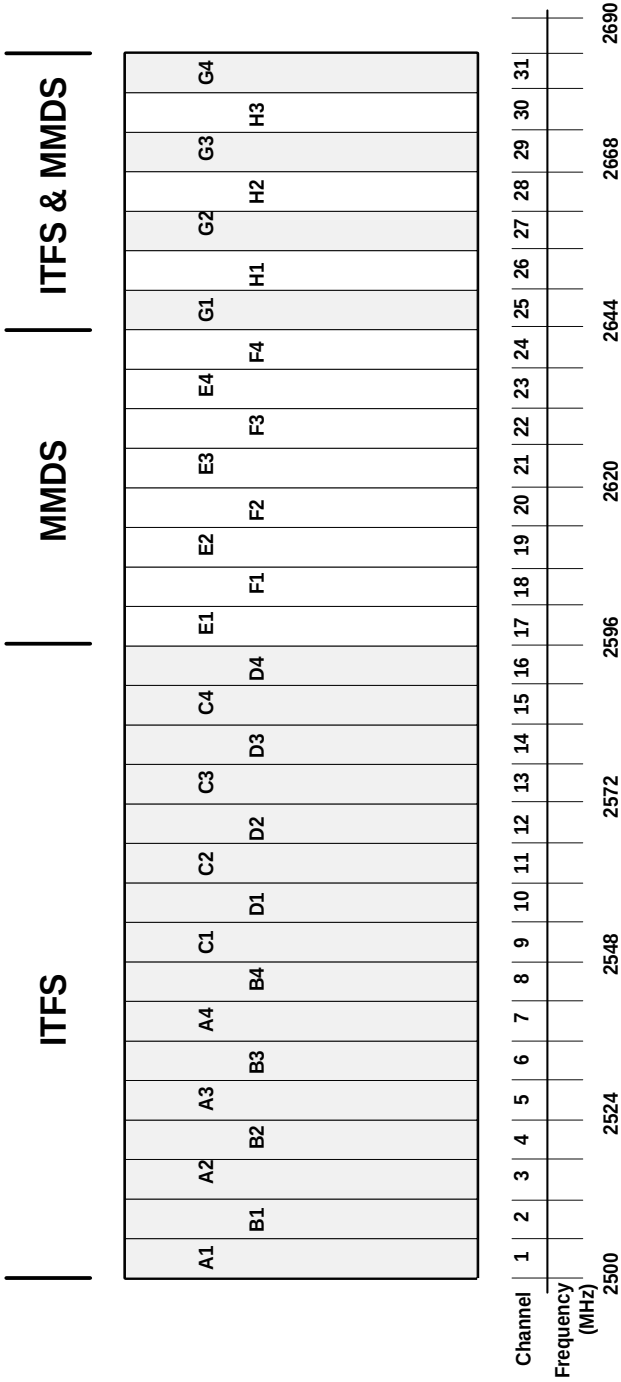
ITFS
MMDS
ITFS & MMDS
A1
A2
A3
A4
B1
B2
B3
B4
C1
C2
C3
C4
D1
D2
D3
D4
E1
E2
E3
E4
F1
F2
F3
F4
G1
G2
G3
G4
H1
H2
H3
Channel
1 2 3 4 5 6 7 8 9 10 11 12 13 14 15 16 17 18 19 20 21 22 23 24 25 26 27 28 29 30 31
Frequency (MHz)
2500 2524 2548 2572 2596 2620 2644 2668 2690

Index

A

AAA server equipment, 1-6
Airlink
  enabling, 2-12
Ancilliary equipment
  housing requirements, 1-6
Antenna
  coaxial cable, 3-21
  connector, 3-21
  gain recommended, 1-6
  installation tips, 3-23
  lightning protection, 3-21
  planning installation, 1-6
  type used to transmit MMDS channels, B-31

B

Backbone network
  connecting to, 3-26
bandwidth
  increasing on the downlink, 2-11
Base station
  connectors, 3-15
  daisy chaining within cell, 3-26
  mounting, 3-21
  naming, 2-8
  power, 3-26
  transmit power level, 2-11

C

Cable
  coaxial cable, 3-21
  Ethernet/power, 3-16
  GPS inter-base station cable, 3-20
  GPS interface cable, 3-20
  serial interface, 3-21
Cell
  wiring, 3-14
Channels
  in MMDS frequencies, B-31
Coaxial cable, 3-21
  jumpers recommended, 3-24
  maximum signal loss allowed, 3-23
configuration parameters
  setting before deploying base station, 2-9
Connector
  data, 3-15
  Ethernet, 3-15
  GPS, 3-19
  power, 3-15
  serial interface, 3-21
Connectors
  supported by base station, 3-15

D

Daisy chain cable *See* GPS Inter-base station cable
Daisy-chaining base stations, 3-26
DHCP server equipment, 1-6
DNS equipment, 1-6
Documentation
  finding additional, preface-xi

E

Equipment
  provided by service providers, 1-6
Ethernet/power cable, 3-16
Expedience system
  obtaining technical support for, preface-xiii
  overview of, 1-1

F

Frequency range, 1-1

G

GPS
  components of, 3-24

connecting to base station, 3-25
connector, 3-19
daisy-chained base stations, 3-26
exposure requirements, 3-25
interface cable, 3-20
mounting pole and socket, 3-25
powering, 3-25
TDD impact, 1-6
time pulse generated, 3-24
GPS Inter-base station cable, 3-20

I

Inter-base station cable, 3-20

L

Lightning protection, 1-5, 1-6, 3-24, A-29
antenna, 3-21
LOS requirement elimination, 1-1

M

MMDS frequency range
channels, B-31
Mounting
brackets, 3-21
template, 3-22

S

Serial interface
cable, 3-21
connector, 3-21
set airlink channel number, 2-10
set airlink downlink power, 2-11
set airlink state, 2-12
set downlink bias, 2-11
SNMP server equipment, 1-6
Subscribers
typical of the Expedience system, 1-1

T

Technical support, preface-xiii
Telnet access to base station, 2-8
Term connection
settings, 2-9
Terminal emulation
access to base station, 2-9
connection settings, 2-9
TVS module, 1-3, 1-4
Typographical conventions
overview, preface-xii

U

UPS
sizing considerations, 3-26

W

Wiring cells, 3-14