AIRVELOCITY 2700 5G SUB-6HZ

4T4R INDOOR RADIO UNIT

Installation Guide

Document Part Number: DUG01251
Document Revision: A3
Published: April 2021

© Copyright by **Airspan Networks Ltd.,** 2021. All rights reserved worldwide.

© Copyright by **Airspan Networks Ltd.,** 2021. All rights reserved worldwide.

Legal Notices

The information contained within this document is proprietary, privileged and intended only for the recipient. As such, the information is subject to all relevant copyright, patent and other laws protecting intellectual property, as well as any specific agreements protecting Airspan Networks Ltd. rights in the aforesaid information. Neither this document nor the information contained herein may be published, reproduced, transmitted or disclosed to third parties, in whole or in part, without the express, prior, written permission of Airspan Networks Ltd. In addition, any use of this document or the information contained herein for the purposes other than those for which it is disclosed is strictly forbidden.

Airspan Networks Ltd. reserves the right, without prior notice or liability, to make changes in equipment design or specifications.

Information supplied by Airspan Networks Ltd. is believed in good faith to be accurate and reliable, while every care has been taken in preparing these documents. However, Airspan Networks Ltd. does not make any representations and gives no warranties of whatever nature in respect of these documents, including without limitation, the accuracy or completeness of any information, facts and/or opinions contained therein. No responsibility is assumed by Airspan Networks Ltd. for the use of the documents nor for the rights of third parties which may be effected in any way by the use thereof. The provision of these documents (and the documents themselves) does not constitute professional advice of any kind. Any representation(s) in these documents concerning performance of Airspan Networks Ltd. product(s) are for informational purposes only and are not warranties of future performance, either expressed or implied. Airspan Networks Ltd., its affiliates, directors, employees and agents shall not be held liable for any damages or losses, of any nature whatsoever, arising from any use of and/or reliance on the documents.

These documents may contain flaws, omissions or typesetting errors; no warranty is granted nor liability assumed in relation thereto unless specifically undertaken in Airspan Networks Ltd. sales contract or order confirmation. Information contained herein is periodically updated and changes will be incorporated into subsequent editions. If you have encountered an error, please notify Airspan Networks Ltd.

Product performance figures quoted within this document are indicative and for information purposes only.

TABLE OF CONTENTS

Document Information 1

Revision History 1

Warnings and Cautions 2

Human Exposure to Radio Frequencies 2
Radio Interference 2
Modifications 2
General 3
⚠ Important Safety Instructions 3
Safety 3
Warning of Hazardous Voltages 3
Adherence to European Directive 2014/53/EU 4
Warning Symbols 4
Service Information 4

About This Document 5

Purpose 5
Intended Audience 5
Document Conventions 5
Related Reading 5

1 Introduction 6

1.1 AirVelocity 2700 5G Sub-6Hz 6

2 Getting Started 7

2.1 AirVelocity 2700 Job Sheet 7

3 Verifying Prerequisites 8

3.1 Verifying Site Requirements 8
3.2 Verify Installation Requirements 8

4 AirVelocity 2700 5G Sub-6 Installation 11

4.1 Ceiling Mount 11
4.2 Wall Mount 17
4.3 Cable Connections 18
4.4 LED Display 19

Appendix A. Job Sheet 20
Acronyms, Abbreviations, and Definitions 21
Customer Service Help Desk 22
Airspan Encourages Comments 22

© Copyright **Airspan Networks Ltd.**, 2021

FIGURES

Figure 1: AirVelocity 2700 5G 6
Figure 2: AirVelocity 2700 5G Sub-6 Physical Dimensions 10
Figure 3: Assemble Ceiling Clip 11
Figure 4: Attaching the Ceiling Clip to the Mounting Bracket 11
Figure 5: Assemble the Mounting Bracket with the Clip onto the Keel/T-bar 12
Figure 6: Tighten Clip to T-bar 12
Figure 7: Tighten the Screws 12
Figure 8: View from the Bottom 13
Figure 9: M3X6 Locking Screw 13
Figure 10: Install Security Lock 14
Figure 11: Hole Spacing for Mounting Bracket 15
Figure 12: Fasten the Mounting Bracket to the Ceiling 15
Figure 13: Mounting AirVelocity Unit on the Mounting Bracket 16
Figure 14: Locking Screw M3X6 16
Figure 15: Fix Mounting Bracket on Wall 17
Figure 16: Mount Unit on Mounting Bracket 17
Figure 17: Fasten Unit on Mounting Bracket 18
Figure 18: Cable Connections 19

TABLES

Table 1: Typographic Conventions 5
Table 2. Minimum Hardware Requirements 8
Table 3. Parts & Kits 8
Table 4: AirVelocity 2700 5G Sub-6 Physical Dimensions 10
Table 5 Wiring Table 18
Table 6: LED Display 19
Table 7: Job Sheet 20
Table 8: Acronyms, Abbreviations, and Definitions 21

© Copyright **Airspan Networks Ltd.,** 2021

Document Information

This document details procedures for installing the Airspan's AirVelocity 2700 5G Sub-6Hz, RU aimed as part of the 5G NR standard and its place in the Airspan product suite. This document is intended for qualified personnel with a working knowledge of 5G.

Revision History

Revision	Date	Summary of Changes	Created by
Rev 0.1	December 2020	• Initial document – draft • Comments	MSF
Rev 0.2 + 0.3	January 2021	Additions from comments	MSF + YS
Rev A	January 2021	Published	MSF
Rev A1-A2	January 2021	Modifications from comments	MSF
Rev A3	April 2021	Additional variants and PSU types	MSF + YS

© Copyright **Airspan Networks Ltd.,** 2021

Warnings and Cautions

Human Exposure to Radio Frequencies

The AirVelocity 2700 5G Sub-6 should be operated from a minimum safe distance of 20 cm (7.87 in.) during normal operation.

Radio Interference

The AirVelocity 2700 5G Sub-6 generates, uses, and can radiate radio frequency energy and, if not installed and used in accordance with the instructions, may cause harmful interference to radio communications. However, there is no guarantee that interference will not occur in a particular installation. If this equipment does cause harmful interference to radio or television reception, which can be determined by turning the equipment on and off, the technician is encouraged to try to correct the interference by performing one or more of the following measures:

- Re-orientate or relocate the unit
- Increase separation between the units and/or End Devices
- Connect the equipment to a circuit different from that to which the power source is connected

Modifications

Any changes and modifications to this device that are not expressly approved by Airspan Networks may void the user's authority to operate the equipment.

© Copyright **Airspan Networks Ltd.,** 2021

General

- Only qualified personnel should be allowed to install, replace, and service the equipment.
- The device cannot be sold retail, to the general public or by mail order. It must be sold to operators.
- Installation must be controlled.
- Installation must be performed by licensed professionals.
- Installation requires special training. The AirVelocity 2700 5G Sub-6 should be installed ONLY by experienced installation professionals who are familiar with local building and safety codes and, wherever applicable, are licensed by the appropriate government regulatory authorities. Failure to do so may void Airspan's product warranty and may expose the end user or the service provider to legal and financial liabilities. Airspan and its resellers or distributors are not liable for injury, damage or violation of regulations associated with the installation of outdoor units or antennas.
- The device is to be installed in a Restricted Access Location.

⚠ Important Safety Instructions

- Read and Save these instructions
- This Installation Guide contains instructions and warnings that should be followed during installation, and operation.
- Failure to follow these instructions could cause bodily injury and/or product failure

Safety

1. Read this guide and follow all operating and safety instructions.
2. Static sensitive components inside - do not remove the lid or base: No user serviceable parts inside.
3. Position the power cord to avoid possible damage; do not overload circuits.
4. Do not place this product on or near a direct heat source, and avoid placing objects on the terminal.
5. Use only a damp cloth for cleaning. Do not use liquid or aerosol cleaners. Disconnect the power before cleaning.
6. The units should not be located too near power lines or other electrical power circuits, where it can come into contact with such power lines or circuits.
7. The radio transceiver must be properly grounded to protect against power surges and accumulated static electricity. It is the user's responsibility to install this device in accordance with the local electrical codes.
8. Installation of the AirVelocity 2700 5G Sub-6 must be contracted to a professional installer.
9. When installed in the final configuration, the product must comply with the applicable Safety Standards and regulatory requirements of the country in which it is installed. If necessary, consult with the appropriate regulatory agencies and inspection authorities to ensure compliance.

Warning of Hazardous Voltages

On AC installations, hazardous voltages exist. Use caution when verifying or working with AC power. Remove metal jewelry that could come into contact with AC power.

On DC sections, short-circuiting the low voltage, low impedance circuits can cause severe arcing that may result in burns or eye damage. Remove rings, watches etc. to avoid shorting DC circuits.

© Copyright **Airspan Networks Ltd.,** 2021

Airspan products do not contain hazardous substances (as defined in UK Control of Substances Hazardous to Health Regulations 1989 and the Dangerous Substances Regulations 1990). At the end of any Airspan products life cycle, the customer should consult with Airspan to ensure that the product is disposed of in conformance with the relevant regulatory requirements.

Adherence to European Directive 2014/53/EU

European Council Recommendation 2014/53/EU details basic restrictions and reference levels on human exposure to electromagnetic fields as advised by the ICNIRP. Adherence to these recommended restrictions and reference levels should provide a high level of protection as regards the established health effects that may result from exposure to electromagnetic fields.

Warning Symbols

The following symbols may be encountered during installation or troubleshooting. These warning symbols mean danger. Bodily injury may result if you are not aware of the safety hazards involved in working with electrical equipment and radio transmitters. Familiarize yourself with standard safety practices before continuing.

Caution, hot surface

Caution

Electro-Magnetic Radiation

High Voltage

DC

Service Information

Refer all repairs to qualified service personnel. Do not modify any part of this device, as this will void the warranty.

Disconnect the power to this product and return it for service if the following conditions apply:

1. The terminal does not function after following the operating instructions outlined in this manual.
2. The product has been dropped or the housing is damaged.

Locate the serial number of the terminal and record this on your registration card for future reference. Also record the MAC address, located on the product sticker.

© Copyright **Airspan Networks Ltd.,** 2021

About This Document

Purpose

This guide provides the workflow and step-by-step procedures for installing the Airspan's AirVelocity 2700 a high performing RU variant. These procedures include:

- Verify prerequisites
- Install Mounting bracket (Ceiling (Suspended or Solid) or Wall)
- Install the AirVelocity 2700
- Connect and manage cables
- Connect power

Intended Audience

This guide is intended for persons who are responsible for installing the AirVelocity 2700 5G Sub-6.

These persons should have a working knowledge of the equipment.

Document Conventions

This document uses the following typographic conventions.

Table 1: Typographic Conventions

Convention	Element
Blue underlined text	Cross-reference links.
Bold text	Keyboard buttons and GUI elements.
Command	Command names or phrases.
Computer output	Text displayed by the computer.
Hyperlinks	Website and e-mail addresses.
Danger	Signifies a hazardous situation—if not avoided—will cause death or serious injury. Describes how to avoid it.
Warning	Signifies a hazardous situation—if not avoided—can cause death or serious personal injury. Describes how to avoid it.
Caution	Signifies a hazardous situation—if not avoided—can void the product warranty, and cause property damage. Describes how to avoid it.
Information/Note	Provides necessary information to explain a task.
Tip	Provides helpful hints.

Related Reading

The following documents contain related information:

- AirVelocity 2700 5G Sub-6 Product Specification

© Copyright **Airspan Networks Ltd.**, 2021

1 Introduction

This section provides a descriptive overview of the Airspan's AirVelocity 2700 and its place in the Airspan product suite.

This document is intended for readers with 5G working knowledge.

All information in this document is for general information only, and is subject for change without notice.

1.1 AirVelocity 2700 5G Sub-6Hz

The AirVelocity 2700 RU is a Radio Unit (RU) for 5G Radio Access Network (RAN). It is combined with additional RAN elements in order to provide a complete 5G mobile radio communication system.

The AirVelocity 2700 is based on open interfaces as defined by the O-RAN alliance. The fronthaul interface between the AirVelocity 2700 and the DU complies with RAN split 7.2a and includes the following signals:

- User plane data (IQ data)
- Control plane data
- Synchronization signals
- Management plane data

Figure 1: AirVelocity 2700 5G

© Copyright **Airspan Networks Ltd.,** 2021

2 Getting Started

2.1 AirVelocity 2700 Job Sheet

Plan the installation of the AirVelocity 2700 by using the Job Sheet, which you can find as a removable job aid in Appendix A for this guide.

© Copyright **Airspan Networks Ltd.,** 2021

3 Verifying Prerequisites

Prior to installing the AirVelocity 2700 5G Sub-6Hz, verify the required safety, power, tools, parts and components. This chapter includes the hardware, software, and client requirements for installation.

> Important: Set up requirements for the installation is detailed in the Job Sheet, see Appendix A.

3.1 Verifying Site Requirements

To set up the AirVelocity 2700 5G Sub-6Hz, an IP connection to an Airspan Control Platform (ACP) is required.

3.2 Verify Installation Requirements

3.2.1 Verify the Tools

Table 2. Minimum Hardware Requirements

Tool	Use
Philips screwdriver (PH2)	for securing the suspended ceiling bracket with M3X6 screws, and safety screw after unit is attached to bracket
Screwdriver/wrench	Appropriate tool for fastening bracket to ceiling or wall

3.2.2 Verify the Parts and Kits

> Verify your order and requirements to ensure the correct unit type is being installed.

Table 3. Parts & Kits

Installation Kit / Part	Part No.	Airspan No.	Consisting of:	Image
AirVelocity 2700 5G Sub-6 unit	AV27-F330-P4CXP-FM-A AV27-F360-P4CXP-FM-A AV27-N48-P4CXP-FM-A AV27-N41-P4CXP-FM-A AV27-F460-P4CXP-FM-A AV27-F470-P4CXP-FM-A AV27-F330-P4CXP-FM-C AV27-F360-P4CXP-FM-C AV27-N48-P4CXP-FM-C AV27-N41-P4CXP-FM-C AV27-F460-P4CXP-FM-C	998-20-042 998-20-040 998-20-146 998-20-151 998-20-148 998-20-144 998-20-170 998-20-172 998-20-174 998-20-176 998-20-178	AirVelocity 2700 5G Sub-6Hz	

© Copyright **Airspan Networks Ltd.**, 2021

Installation Kit / Part	Part No.	Airspan No.	Consisting of:	Image
AirVelocity 2700 5G Sub-6 Mounting Kit	AV27-WCMK-ID-1	903-03-049	Mounting Kit is included in the packaging: • Mounting Bracket • Suspended Ceiling clip • Hardware – 5 M3X6 screws	
AirVelocity External AC to DC Power Supply (EU)	AV27-PSU-ID-AC-EU-1		AC ADAPTER,150W, IN 100-240VAC,OUT 56VDC/2.679A – Plug Type E	
OR				
AirVelocity External AC to DC Power Supply (US)	AV27-PSU-ID-AC-US-1		AC ADAPTER,150W, IN 100-240VAC,OUT 56VDC/2.679A – Plug Type B	
OR				
AirVelocity External AC to DC Power Supply (JP)	AV27-PSU-ID-AC-JP-1		AC ADAPTER,150W, IN 100-240VAC,OUT 56VDC/2.679A – Plug Type A	

Depending on field conditions, either a suspended ceiling or standard ceiling mounting kit is required, which is included in the packaging.

© Copyright **Airspan Networks Ltd.,** 2021

3.2.3 Physical Dimensions

AirVelocity 2700 5G Sub-6 is in an indoor enclosure.

Table 4: AirVelocity 2700 5G Sub-6 Physical Dimensions

Dimensions (H x W x D)	Volume	Weight
225 x 225 x 44mm / 8.8 x 8.8 x 1.7”	2.22l	1.65Kg / 3.6 Lbs.

Figure 2: AirVelocity 2700 5G Sub-6 Physical Dimensions

© Copyright **Airspan Networks Ltd.,** 2021

4 AirVelocity 2700 5G Sub-6 Installation

AirVelocity 2700 supports ceiling (suspended ceiling and conventional ceiling) and wall mounting by using these elements.

AirVelocity 2700 Mounting Kit:

- Mounting plate – used for mounting on either a suspended ceiling, a conventional ceiling or on the wall.
- Ceiling Clip – used for mounting on a suspended ceiling – provided with screws, (M3x 6mm x5), (M3x6 for locking).

4.1 Ceiling Mount

The following defines the AirVelocity 2700 ceiling mount assembly procedure for a suspended ceiling and a conventional ceiling.

> Prior to assembly, in any mounting scenario, determine where the unit is to be installed.

4.1.1 Suspended Ceiling Assembly

1. Determine the optimal position where the AirVelocity unit is to be installed at an intersection between the suspended ceiling keel/T-bar supports.
2. Assemble the Ceiling clip as shown below:

Figure 3: Assemble Ceiling Clip

3. Connect the ceiling clip to the mounting bracket using the four (4) Philips-head screws (M3x6 – supplied) onto the threaded holes in the Mounting bracket, as displayed below:

Figure 4: Attaching the Ceiling Clip to the Mounting Bracket

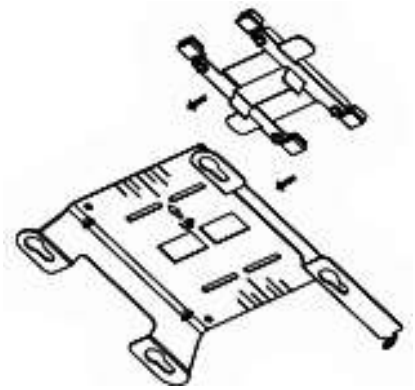

© Copyright **Airspan Networks Ltd.,** 2021

4. Fasten the Mounting bracket ceiling clip onto the suspended ceiling's keel/T-bar.

Figure 5: Assemble the Mounting Bracket with the Clip onto the Keel/T-bar

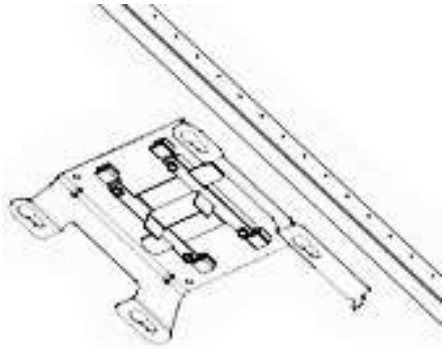

5. Slide together the clip onto the suspended ceiling's T-bar, as shown below:

Figure 6: Tighten Clip to T-bar

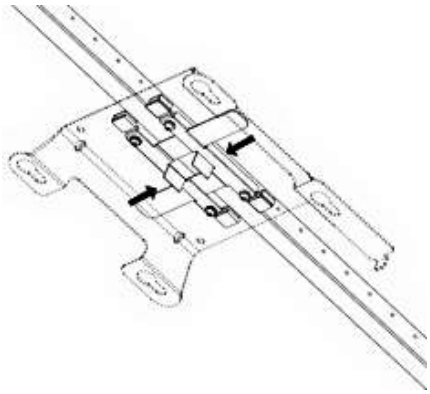

6. Fasten the clip with the 4 – M3x6 screws, as shown below:

Figure 7: Tighten the Screws

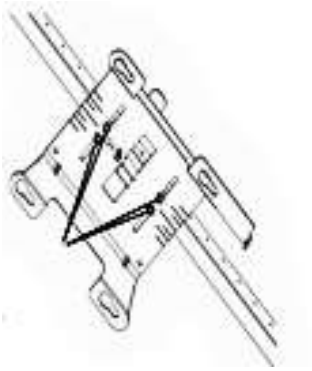

© Copyright **Airspan Networks Ltd.,** 2021

7. Lift the AirVelocity 2700 5G Sub-6 into position and align the mounting screws (supplied) into the key-holes on the underside of the mounting bracket, as shown below:

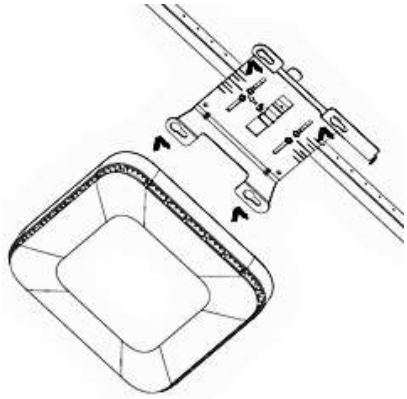

8. Slide unit to engage the key-hole slots.

Figure 8: View from the Bottom

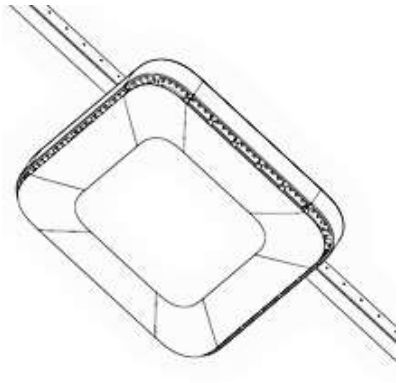

9. Insert the M3X6 screw to lock the unit onto the Mounting bracket.

Figure 9: M3X6 Locking Screw

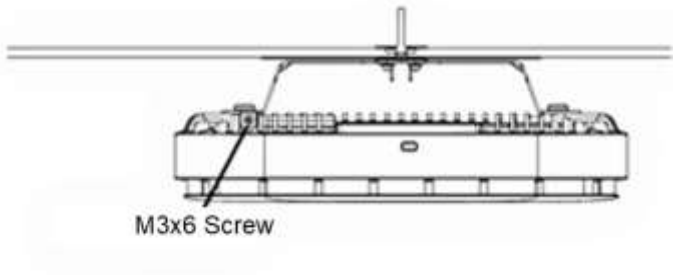

© Copyright **Airspan Networks Ltd.,** 2021

10. After installation is completed install the Kensington Security lock, this is used both for anti-theft and anti-drop purposes. Loop the other end of the Security cable to a secure riser.

Figure 10: Install Security Lock

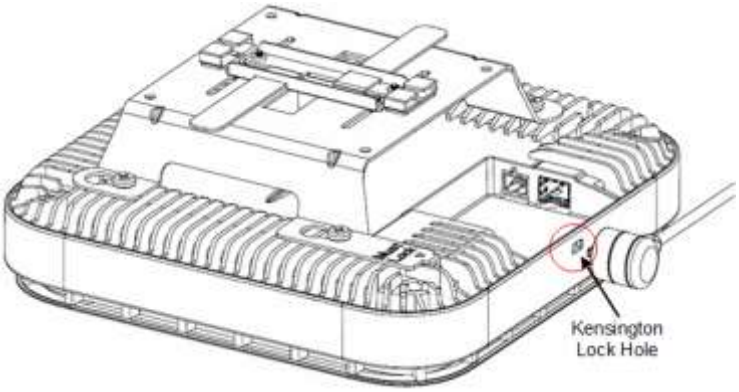

11. Connect the necessary cables to the relevant ports, see Cable Connections.
    - Fiber Ethernet port – SFP+ 10GbE – if applicable
    - Copper Ethernet port – ETH 10GbE – if applicable
    - Connect to power using a Phoenix Type Connector 2-Pole 5mm Pitch – (input range 42-57vDC)

© Copyright **Airspan Networks Ltd.,** 2021

4.1.2 Conventional Ceiling Assembly

1. Determine the optimal position where the AirVelocity unit is to be installed.
2. Set aside the Ceiling clip (it is not needed for conventional ceiling assembly).
3. Position the mounting bracket on the ceiling. Be sure to position the mounting bracket straight to ensure the unit sits as required.
4. Mark the screw positions carefully through the provided holes on the mounting bracket onto the ceiling.

Figure 11: Hole Spacing for Mounting Bracket

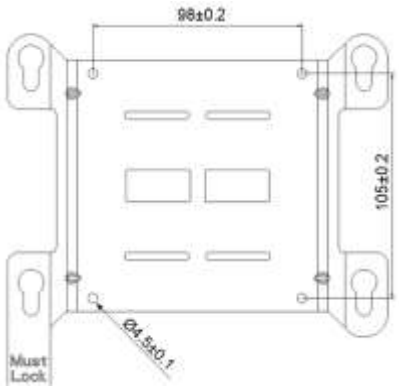

5. After drilling holes and inserting approved ceiling anchors (plugs) fasten the mounting bracket to the ceiling with approved screws and washers (not included).

Figure 12: Fasten the Mounting Bracket to the Ceiling

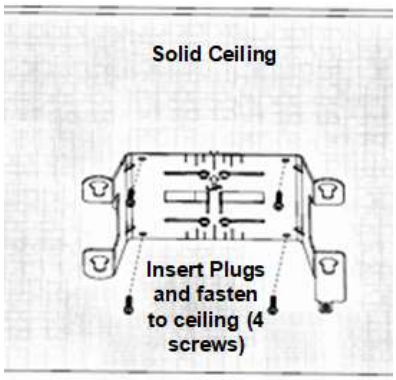

6. The mounting bracket is installed and ready for AirVelocity 2700 unit mounting.

> Screws and washers (x4) and any necessary hardware are not supplied by Airspan and are the responsibility of the installer. Use appropriate ceiling hardware according to field conditions.

7. Lift the AirVelocity 2700 into position and align the mounting screws (supplied) into the key-holes on the underside of the mounting bracket, as shown below:

© Copyright **Airspan Networks Ltd.,** 2021

Figure 13: Mounting AirVelocity Unit on the Mounting Bracket

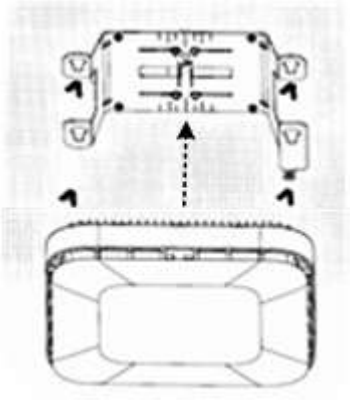

8. Insert the M3X6 screw to lock the unit onto the Mounting bracket. as shown below:

Figure 14: Locking Screw M3X6

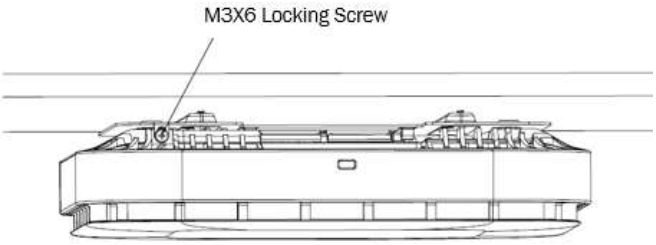

9. After installation is completed install the Kensington Security lock, this is used both for anti-theft and anti-drop purposes. Fasten the other end of the Security cable to the ceiling using a screw & plug into a secure area of the ceiling.
10. Connect the necessary cables to the relevant ports, see Cable Connections.
    - Fiber Ethernet port – SFP+ 10GbE – if applicable
    - Copper Ethernet port – ETH 10GbE – if applicable
    - Connect to power using a Phoenix Type Connector 2-Pole 5mm Pitch – (input range 42-57vDC)

© Copyright **Airspan Networks Ltd.,** 2021

4.2 Wall Mount

The following describes the Wall mounting procedure:

1. Select the required location where the AirVelocity unit is to be installed on the wall.

2. Utilize the mounting bracket and position it against the wall where the unit is to be mounted. Position with the Arrow symbol pointing up. Be sure to position the mounting bracket straight and level mounting to ensure the unit sits level.

3. Mark the holes positions carefully through the mounting bracket onto the wall. See Figure 11.

4. Drill the four (4) holes. After drilling insert wall plugs (x4) (not included).

> Wall plugs (x4) and necessary hardware are **not** supplied by Airspan and are the responsibility of the installer. Use appropriate wall plugs according to field conditions.

5. Position the back bracket on the wall and drive the screws into inserted plugs, as shown below:

Figure 15: Fix Mounting Bracket on Wall

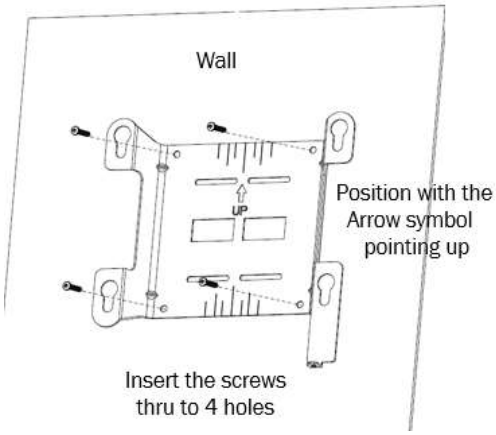

6. Lift and carefully align and position the unit (verify that the 4 screws already inserted) so that the protruding screw heads engage the key-hole slots on the mounting bracket.

Figure 16: Mount Unit on Mounting Bracket

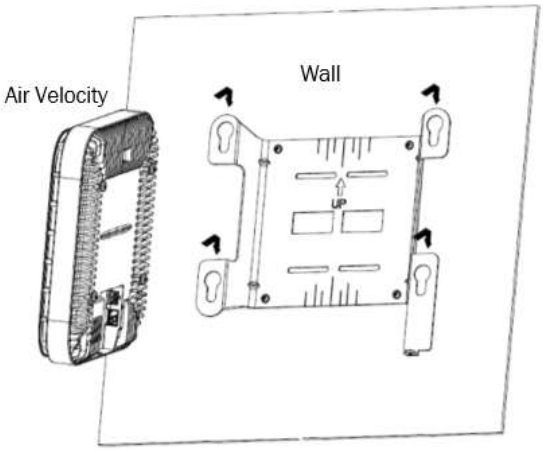

© Copyright **Airspan Networks Ltd.,** 2021

7. Push down slightly to engage the heads of the screws onto the slots.
8. Insert the M3X6 screw to lock the unit onto the Mounting bracket. as shown below:

Figure 17: Fasten Unit on Mounting Bracket

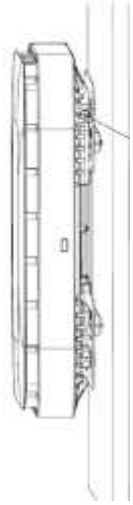

9. Optionally after installation is completed install the Kensington Security lock, this is used both for anti-theft and anti-drop purposes. Fasten the other end of the Security cable to a secure connection on the wall.
10. Connect the necessary cables to the relevant ports, see Cable Connections.
    - Fiber Ethernet port – SFP+ 10GbE – if applicable
    - Copper Ethernet port – ETH 10GbE – if applicable
    - Connect to power using a Phoenix Type Connector 2-Pole 5mm Pitch – (input range 42-57vDC)

4.3 Cable Connections

4.3.1 DC Cable Connection

1. Insert the power cable wires into the Phoenix Type Connector (2-Pole 5mm Pitch).

Table 5 Wiring Table

Wire Color	Polarity	Symbol
Black	Negative	-
Red	Positive	+

2. Secure the wires by tightening the retention screws, as shown in figure below.

4.3.2 Fiber Ethernet (SFP+) Cable Connection

Insert SFP+ module and connector (when applicable), as shown in figure below.

© Copyright **Airspan Networks Ltd.,** 2021

4.3.3 Copper Ethernet Cable Connection

Insert RJ45 connection (when applicable), as shown in figure below.

Figure 18: Cable Connections

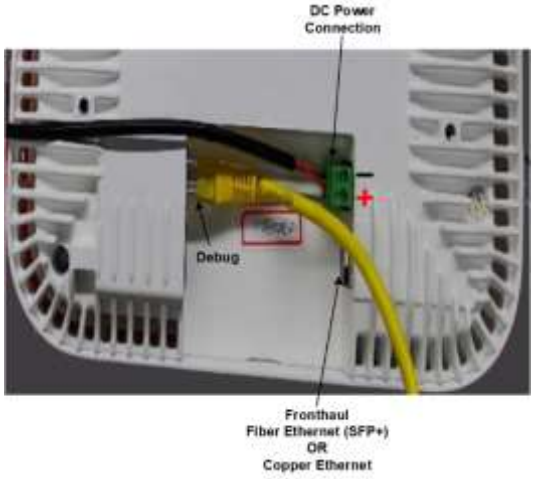

4.4 LED Display

The two LEDs on the unit panel, provide unit status indication.

When powering up refer to the following table for indication of current status:

Table 6: LED Display

LED	State	Red	Green
Power	Power On	Flash Once	Flash Once
	Startup Ongoing	Off	Off
	Hardware Error	On	Off
	Clock Locking	N/A	Blink@1HZ
	Clock Locked	N/A	On
STATUS	Power On	Flash Once	Flash Once
	Fronthaul Interface Linkdown	Off	Off
	Connect	Off	Blink@1HZ
	Normal Operating	Off	On
	eCPRI Packet Error	Blink@1HZ	Off

© Copyright **Airspan Networks Ltd.,** 2021

Appendix A. Job Sheet

This job sheet enables the users to keep track of their installation. It covers all the prerequisites required for accomplishing the AirVelocity 2700 installation.

Table 7: Job Sheet

Site Requirements

• Area for installation identified
• Position on ceiling or wall identified
• Method of reaching ceiling / wall positions (ladders, elevated work platform)
• All equipment items available at the installation site:
  • AirVelocity 2700 5G Sub-6 unit
  • Mounting bracket, and required hardware
  • Required cables

Tool Requirements (For further information, see Verify the Tools.)
• Philips screwdriver - securing screws • Screw driver or wrench (for Wall mounting if required)
Other installed materials
• Cable ties (good to have) • Labels (good to have)

© Copyright **Airspan Networks Ltd.,** 2021

Acronyms, Abbreviations, and Definitions

Table 8: Acronyms, Abbreviations, and Definitions

Term	Expansion
LED	Light Emitting Diode
NR	New Radio
5G	Long Term Evolution
RU	Radio Unit
UE	User Equipment. The end user in 5G

© Copyright **Airspan Networks Ltd.,** 2021

Customer Service Help Desk

Airspan's *Customer Care Help Desk* offers prompt and efficient customer support services.

> To take advantage of Airspan's *Customer Care Help Desk* support, you must be a registered user and must have a valid support contract. To register, click here and fill the Registration form.

To create and update issue logs, send e-mails to Customer Care Help Desk. Once you submit your issue, the system generates a new issue and sends an issue number for your reference. The system uses this issue number to categorize and store e-mails under the appropriate issue.

To help *Customer Care Help Desk* identify your issue, include the issue number and your *Customer Care Helpdesk* account details in all further communications.

Main Operations	**Worldwide Headquarters**
Airspan Communications Ltd. Capital Point 33 Bath Road Slough, Berkshire SL1 3UF, United Kingdom Tel: +44-1895-467-100	Airspan Networks Inc. 777, Yamato Road, Suite 310 Boca Raton, FL 33431, USA Tel: +1-561-893-8670

Airspan Encourages Comments

Airspan welcomes any feedback and suggestions that help to improve the quality of the documentation. Send your feedback to documentfeedback@airspan.com.

Find more at www.airspan.com.

© Copyright **Airspan Networks Ltd.,** 2021

Federal Communications Commission (FCC) Interference Statement

This equipment has been tested and found to comply with the limits for a Class B digital device, pursuant to Part15 of the FCC Rules.

These limits are designed to provide reasonable protection against harmful interference in a residential installation. This equipment generate, uses and can radiate radio frequency energy and, if not installed and used in accordance with the instructions, may cause harmful interference to radio communications.

However, there is no guarantee that interference will not occur in a particular installation. If this equipment does cause harmful interference to radio or television reception, which can be determined by turning the equipment off and on, the user is encouraged to try to correct the interference by one of the following measures:

- Reorient or relocate the receiving antenna.
- Increase the separation between the equipment and receiver.
- Connect the equipment into an outlet on a circuit different from that to which the receiver is connected.
- Consult the dealer or an experienced radio/TV technician for help.

This device complies with Part 15 of the FCC Rules. Operation is subject to the following two conditions:
(1) This device may not cause harmful interference, and (2) this device must accept any interference received, including interference that may cause undesired operation.
FCC Caution: Any changes or modifications not expressly approved by the party responsible for compliance could void the user's authority to operate this equipment.

RF Exposure Warning

This equipment complies with FCC radiation exposure limits set forth for an uncontrolled environment.
This product may not be collocated or operated in conjunction with any other antenna or transmitter
This equipment must be installed and operated in accordance with provided instructions and the antenna(s) used for this transmitter must be installed to provide a separation distance of at least 20 cm from all persons and must not be collocated or operating in conjunction with any other antenna or transmitter.