ASST.K8517
K7231/32/33/34-0920

Hot Wheels® R/C SUPPORT

Questions or problems with your product?
DON'T RETURN IT TO THE STORE!
Just call us for help.

U.S. consumers may also register their products at this number.

1-888-557-8926

⚠ CAUTION: Surfaces may become hot and cause burns if electronics get wet. Do not operate vehicle through water or snow.

CAUTION-ELECTRIC TOY: NOT RECOMMENDED FOR CHILDREN UNDER 6 YEARS OF AGE. AS WITH ALL ELECTRIC PRODUCTS,PRECAUTIONS SHOULD BE OBSERVED DURING HANDLING AND USE TO PREVENT ELECTRIC SHOCK. INPUT: 120VAC, 60Hz, 0.05A. OUTPUT:5.6VDC, 230mA, 1.29VA.

Keep these instructions for future reference: they contain important information.

I. CONTENTS

- Vehicle
- Transmitter
- 2 AA Batteries (if supplied)
- 4.8V Jet Turbo® Battery Pack (if supplied)
- 4.8V Jet Turbo® Charger (if supplied)

Please check the package for the specific power system for this vehicle:

Vehicles use the Tyco® R/C 4.8V Jet Turbo® rechargeable NiCd Battery Pack & Charger.

You'll find detailed information about all these power systems in this Owner's Manual.
For information about the 4.8V Jet Turbo® NiCd power system, please refer to Section VI.

II. CHASSIS

Your vehicle's chassis will look like one of the chassis shown, depending on the vehicle's design.

❶ Battery latch
❷ ON/OFF switch
❸ Steering adjuster

Refer to label on transmitter and vehicle for frequency.
Do not race vehicles with the same frequency.

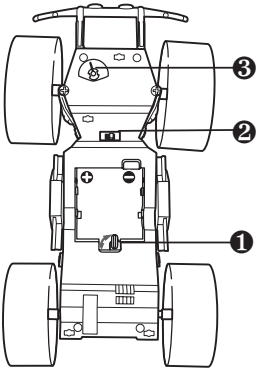

III. VEHICLE OPERATION

❶ FORWARD
❷ REVERSE
❸ LEFT
❹ RIGHT

FORWARD

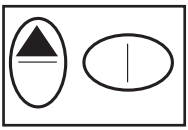

REVERSE

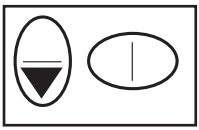

LEFT

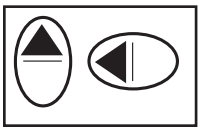

RIGHT

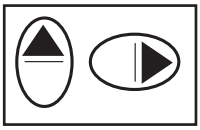

IV. TRANSMITTER

Transmitters are equipped with a special automatic ON battery-saving feature. Just turn your vehicle ON. Then push either transmitter stick and you will be able to run and control your vehicle.

TRANSMITTER

1. To install the transmitter battery, open the battery cover as shown.
2. Install 2 AA batteries with polarity (+/-) as shown inside the battery compartment.
3. Replace the battery cover.

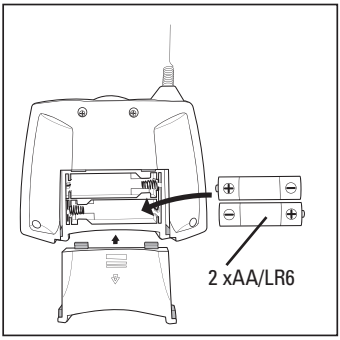

V. POWER CLIP

Please check the package for the specific power system for this vehicle:

Vehicles use the Tyco® R/C 4.8V Jet Turbo® rechargeable NiCd Battery Pack & Charger.

For detailed information regarding NiCd battery charging and safety, please follow the specific instructions that came with your battery pack and charger.

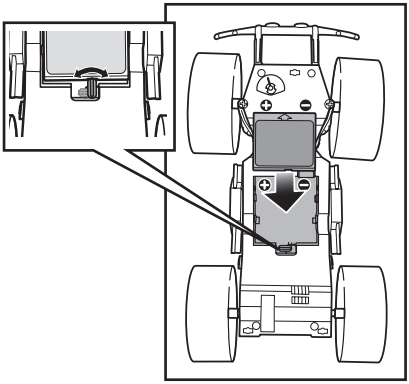

VEHICLE BATTERY INSTALLATION

These instructions apply to the 4.8V Jet Turbo® rechargeable NiCd Battery Pack.

1. Rotate the battery latch to the open position.
2. Insert the rechargeable NiCd battery pack) into the battery compartment and slide it away from the latch.
3. Make sure the rechargeable NiCd battery pack) snaps securely in place. Rotate the latch to the locked position.
4. To remove: turn the latch, slide it toward the latch and lift it out.

VI. 4.8V JET TURBO® NiCd

1. Rotate the battery latch to the open position.
2. Insert the battery pack into the battery compartment and slide it away from the latch.
3. Make sure the battery pack snaps securely in place and rotate the latch to the locked position.
4. To remove the battery pack: turn the latch, slide the battery pack toward the latch and lift it out.

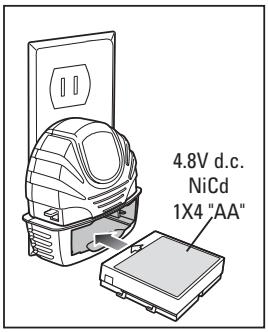

BATTERY CHARGING/CARE – 4.8V JET TURBO® BATTERY

⚠ **CAUTION:** Use only the charger supplied with this toy. Do not use any other charging source.

1. Plug the wall pack charger into a standard wall outlet.
2. Click the battery pack into the charger. Make certain the battery pack is secure in the charger.
3. To disconnect, push the red button on the side of charger and simultaneously slide the battery pack out.
4. After charging, the battery will feel warm. This condition is normal for fully charged batteries.
5. New battery packs must be charged for 10 hours the first two times charged. Subsequent charges will require 6 hours. Charging the battery pack for more than 6 hours will not give you a longer running time. 6 hours is all that is required for a fully charged battery pack.
6. Unlike alkaline batteries, where the power loss is gradual, a NiCd battery will run for its normal running time and then lose most of its power at once. That's when you'll know it is time to recharge the battery pack.
7. After use, the battery pack will be hot! Wait at least 20 minutes until the battery pack cools before recharging. Recharging a warm or hot battery pack will greatly reduce the number of times your battery pack can be recharged. Charge only TYCO® R/C Jet Turbo® 4.8V NiCd 700 or 800mAh rechargeable battery packs. Other types of batteries may burst and causing injury to persons and damage.
8. The charger must be disconnected from the electric supply.

RECHARGEABLE BATTERY INFORMATION:

- DO NOT RECHARGE BATTERY PACK IF IT'S HOT. ALLOW IT TO COOL BEFORE RECHARGING.
- DO NOT RECHARGE A BATTERY PACK THAT SHOWS LEAKAGE OR CORROSION.
- DO NOT DISASSEMBLE THE BATTERY PACK. THE BATTERY PACK IS A SEALED RECHARGEABLE NiCd BATTERY PACK.
- EXERCISE CAUTION IN HANDLING A HOT BATTERY PACK.
- IF BATTERY PACK AND/OR CHARGER ARE WET, THOROUGHLY DRY BEFORE CHARGING.
- DO NOT RECHARGE NON-RECHARGEABLE BATTERIES.
- THIS POWER UNIT IS INTENDED TO BE CORRECTLY ORIENTATED IN A VERTICAL OR FLOOR MOUNT POSITION.

Note to Adults:

- Remove rechargeable batteries before recharging.
- The battery charger is for adult use only.
- Regularly examine for damage to the plug, enclosure and other parts. In the event of any damage, the toy must not be used with the charger until the damage has been repaired.
- The charger is not a toy.

NiCd

THIS PRODUCT USES A NICKEL-CADMIUM RECHARGEABLE BATTERY PACK. BATTERY MUST BE RECYCLED OR DISPOSED OF PROPERLY. FOR FURTHER INFORMATION REGARDING BATTERIES OR THEIR DISPOSAL PLEASE CALL 1-888-557-8926.

QUICK TIPS

1. When your vehicle starts to lose power, it may lose functions or performance. It's time for a recharge. For best stunt performance, always start with a fully-charged battery.
2. Your vehicle's running time may change depending on your driving style.
3. Radio interference can make your vehicle run badly. Interference can be caused by other R/C vehicles running on the same frequency; electrical wires; large buildings; CB radios; or other wireless gear. Try to stay away from these!
4. Point your transmitter antenna up - not down toward your vehicle. If your vehicle gets too far away, it won't work properly.
5. Don't drive your vehicle in sand or through water or snow. f your vehicle does get wet, wipe with a towel and allow to dry completely.
6. Don't store your vehicle near heat or in direct sunlight. Always turn switches OFF and remove all batteries for storage.

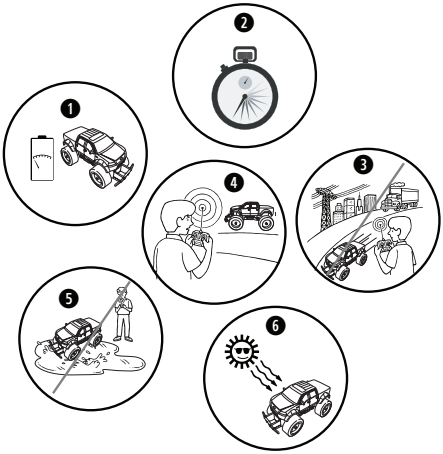

CONSUMER INFORMATION

Note to Adults: To ensure that the child's play is both safe and fun, please review all operating instructions and safety rules with your child.

SAFETY TIPS

- NEVER drive your vehicle on streets! They're for real cars!
- DO NOT pick up vehicle while in motion.
- Keep fingers, hair and loose clothing away from the tires and the wheel hubs while the vehicle is switched ON.

⚠ **CAUTION:** To prevent entanglement, keep hair away from wheels.

- Adult supervision is recommended when this vehicle is being operated.
- To avoid accidental operation, remove all batteries when not in use. Always turn the vehicle OFF before removing batteries.

BATTERY SAFETY INFORMATION

In exceptional circumstances batteries may leak fluids that can cause a chemical burn injury or ruin your toy (product). To avoid battery leakage:

- Non-rechargeable batteries are not to be recharged.
- Rechargeable batteries are to be removed from the toy before being charged (if designed to be removable).
- Rechargeable batteries are only to be charged under adult supervision (if designed to be removable).
- Do not mix alkaline, standard (carbon-zinc), or rechargeable (nickel-cadmium) batteries.
- Do not mix old and new batteries.
- Only batteries of the same or equivalent type as recommended are to be used.
- Batteries are to be inserted with the correct polarity.
- Exhausted batteries are to be removed from the toy.
- The supply terminals are not to be short-circuited.
- Dispose of battery(ies) safely.
- Do not dispose of this toy in a fire. The batteries inside may explode or leak.

Battery Performance Note:
For best performance use regular or high-performance alkaline batteries (where disposable batteries are called for). If your vehicle is supplied with standard (carbon-zinc) batteries for initial use and/or demonstration purposes, we recommend replacing them with alkaline batteries when necessary.
Battery life may vary depending on battery brand.

90 DAY LIMITED WARRANTY – Hot Wheels® R/C PRODUCTS

Mattel, Inc. warrants to the original consumer purchaser that this product will be free of defects in material and workmanship for ninety (90) days (unless specified in alternate warranties) from the date of purchase. Mattel will repair or replace the product, at our sole option, in the event of such a defect within the warranty period.

In the event of a defect covered under this warranty, first call the toll-free number listed below. Many problems can be solved in this manner. If necessary, you will be instructed to return the product, postage prepaid and insured, to the address below. Enclose your name, address, dated sales receipt, and a brief explanation of the defect. Repair or replacement, and return shipment, will be free of charge. Please return only the defective part or unit, packed securely.

This warranty does not cover damage resulting from unauthorized modification, accident, misuse or abuse. If the product is returned without a dated sales receipt, the product may be excluded from coverage under this warranty.

Mattel's liability for defects in material and workmanship under this warranty shall be limited to repair or replacement, at our sole option, and in no event shall we be responsible for incidental, consequential, or contingent damages (except in those states that do not allow this exclusion or limitation). This warranty is exclusive, and is made in lieu of any express or implied warranty. This warranty gives you specific legal rights and you may have other rights, which vary from state to state. Some states do not allow the exclusion of incidental or consequential damages, so the above exclusions or limitations may not apply to you.

TOLL-FREE NUMBER: 1-888-557-8926 - **Valid only in U.S.A.**

Hours: 8:00 A.M.-5:00 P.M. Eastern Time; Monday - Friday. Expect some delay in January following the holiday season. Please be patient and keep trying the toll-free number.

ADDRESS FOR RETURNS:
CONSUMER RELATIONS
636 GIRARD AVENUE
EAST AURORA, NY 14052

Valid only in U.S.A.

© 2006 Mattel, Inc., 333 Continental Blvd., El Segundo, CA 90245 U.S.A. Consumer Relations 1-888-557-8926 **PRINTED IN CHINA.** service.mattel.com. • Mattel Canada Inc., Mississauga, Ontario L5R 3W2. • Mattel U.K. Ltd., Vanwall Business Park, Maidenhead SL6 4UB. Helpline 01628500303 • Mattel Australia Pty., Ltd., Richmond, Victoria. 3121.Consumer Advisory Service - 1300 135 312. • Mattel East Asia Ltd., Room 1106, South Tower, World Finance Centre, Harbour City, Tsimshatsui, HK, China. • Diimport & Diedarkan Oleh: Mattel SEA Ptd Ltd.(993532-P) Lot 13.5, 13th Floor, Menara Lien Hoe, Persiaran Tropicana Golf Country Resort, 47410 P.J. Tel:03-78803817, Fax:03-78803867.

Protect the environment by not disposing of this product with household waste (2002/96/EC). Check your local authority for recycling advice and facilities.

COMPLIANCE WITH FCC REGULATIONS (VALID IN U.S. ONLY)
This device complies with part 15 of the FCC Rules. Operation is subject to the following two conditions: (1) This device may not cause harmful interference, and (2) this device must accept any interference received, including interference that may cause undesired operation.
This device generates and uses radio frequency energy and if not used properly may cause interference to radio and television reception. It has been tested and found to comply with the limits set by the FCC which are designed to provide reasonable protection against such interference.

NOTE: Changes or modifications not expressively approved by the manufacturer responsible for compliance could void the user's authority to operate the equipment.