Raymarine UK Limited
www.raymarine.com

Print Specification

Document Number:	81381-3
Document Title:	Ray53/63/73 VHF Radios - Installation & ops
Date Raised:	04/05/2020
Size:	A5 (210mmx148mm)
Page Orientation:	Landscape
Total Pages:	144
Single or Double Sided:	Double Sided
Paper Cover:	157 gsm coated, or similar
Paper Body Pages:	80 gsm uncoated offset/book paper
Cover Ink Colour:	Colour
Body Pages Ink Colour:	Monochrome
Colour Matching:	FOGRA39 (ISO 12647-2:2004)
Tech Pubs Contact:	Wilman, Andy,
Binding:	Perfect Binding (Glued)

Colour matching instructions:

Any artwork featuring the colour Raymairne logo or the "Ray maroon" colour tint shown below, must be matched to the following CMYK or Pantone colour specification:

Cyan (C): 29
Magenta (M): 97
Yellow (Y): 49
Black (K): 33

Pantone PMS 208

Raymarine

RAY53/63/73

Installation & operation instructions

English (en-US)
Date: 04-2020
Document number: 81381-3
© 2020 Raymarine UK Limited

Trademark and patents notice

Raymarine, **Tacktick**, **Clear Pulse**, **Truzoom**, **SeaTalk**, **SeaTalk hs**, **SeaTalkng**, and **Micronet**, are registered or claimed trademarks of Raymarine Belgium.

FLIR, **LightHouse**, **DownVision**, **SideVision**, **RealVision**, **HyperVision**, **Dragonfly**, **Element**, **Quantum**, **Axiom**, **Instalert**, **Infrared Everywhere**, **The World's Sixth Sense** and **ClearCruise** are registered or claimed trademarks of FLIR Systems, Inc.

All other trademarks, trade names, or company names referenced herein are used for identification only and are the property of their respective owners.

This product is protected by patents, design patents, patents pending, or design patents pending.

Fair Use Statement

You may print no more than three copies of this manual for your own use. You may not make any further copies or distribute or use the manual in any other way including without limitation exploiting the manual commercially or giving or selling copies to third parties.

Software updates

Check the Raymarine website for the latest software releases for your product.
www.raymarine.com/software

Product documentation

The latest versions of all English and translated documents are available to download in PDF format from the website:
www.raymarine.com/manuals.
Please check the website to ensure you have the latest documentation.

Publication copyright

Copyright ©2020 Raymarine UK Ltd. All rights reserved.

English (en-US)
Document number: 81381-3
AE;20276;2020-05-04T13:12:54

Contents

Chapter 1 Important information 11

Certified Installation 11

FCC 11

Compliance Statement (Part 15.19) 11

FCC Interference Statement (Part 15.105 (b)) 11

Innovation, Science and Economic Development Canada (ISED) 12

Innovation, Sciences et Développement économique Canada (Français) 12

Water ingress 12

Disclaimer 12

Declaration of Conformity 12

Product disposal 13

Warranty registration 13

IMO and SOLAS 13

Technical accuracy 13

Chapter 2 Document and product information 15

2.1 Product documentation 16

SeaTalkng ® documentation 16

User manuals Print Shop 16

Document conventions 16

Document illustrations 16

2.2 Product overview 16

2.3 Applicable products 17

Required additional components 17

Optional additional components 17

Optional wireless components 18

Compatible MFDs 18

Incompatible MFDs 18

2.4 Parts supplied – Ray53 18

2.5 Parts supplied – Ray63 / Ray73 19

2.6 Licensing 19

USA licensing requirements 19

Canada licensing requirements 19

Europe and rest of world licensing requirements 19

Additional information – Ray53 19

Additional information – Ray63 19

Additional information – Ray73 20

Additional information - wireless handset 20

Additional information - wireless charging holster 20

Additional information - wireless hub 20

Additional information - wireless speaker 20

2.7 Obtain MMSI (Maritime Mobile Service Identity) number 20

2.8 Automatic Transmitter Identification System (ATIS) 21

2.9 Software updates 21

Checking software versions 21

Chapter 3 Installation 23

3.1 Selecting a location 24

General location requirements 24

GNSS (GPS) location requirements 24

External GNSS (GPS) antenna location requirements 25

Antenna mounting and EME exposure 25

Multiple antenna installations 25

Loud hailer location requirements 25

3.2 EMC installation guidelines 25

Suppression ferrites 25

Connections to other equipment 26
3.3 Wireless product location requirements 26
Wireless location requirements 26
Pre-installation site survey 26
3.4 Product dimensions 27
Product dimensions — Ray53 27
Product dimensions — Ray63 / Ray73 27
Product dimensions — Fistmic 28
Product dimensions - Wired handset (Raymic) 28
Product dimensions - speakers 28
Product dimensions - Wireless hub 29
Product dimensions - Wireless handset and holster 29
3.5 Mounting 29
Tools required for installation 29
Mounting options 30
Bracket mounting 30
Panel mounting — Ray53 30
Panel mounting — Ray63 / Ray73 31
Fistmic mounting 32
Wired handset mounting using the holster 33
Wired and wireless speaker mounting 33
Pass-through panel kit mounting 33
Mounting the wireless hub 34
Mounting the charging holster for the wireless handset 35

Chapter 4 Cables and connections 37

4.1 General cabling guidance 38
Cable types and length 38
Cable routing 38
Strain relief 38
Circuit isolation 38
Cable shielding 38
Connections to other equipment 38
Dust caps 38
Bare end wire connections 38
4.2 Connections overview — Ray53 38
4.3 Connections overview — Ray63 / Ray73 39
Primary and secondary station connectors 39
4.4 Power connection 39
In-line fuse and thermal breaker ratings 40
Grounding 40
Power distribution 40
4.5 Fistmic connection (Ray63 / Ray73 only) 42
4.6 Secondary handset station (Ray63 / Ray73 only) 42
Wired handset extension cables 42
Connecting handsets and cables 42
4.7 SeaTalkng ® / NMEA 2000 connection 42
Connecting SeaTalkng ® cables 43
4.8 NMEA 0183 connection 43
4.9 Connecting a VHF antenna 43
4.10 GNSS (GPS) antenna connection 44
4.11 Passive speaker connection 44
4.12 Wireless hub connection 44
4.13 Wireless handset charging holster – power connection 44
In-line fuse and thermal breaker ratings 44
4.14 Wireless handset connections 44
4.15 Wireless speaker – power connection 45
In-line fuse and thermal breaker ratings 45
4.16 Loud hailer connection (Ray73 only) 45

81381-3-en-US_A5_PRINT.pdf 6
5/4/2020 3:26:30 PM

Chapter 5 Getting started 47
5.1 Controls and interface 48
5.2 Handset controls 48
5.3 Powering the unit on 49
Powering the handset 49
5.4 Powering the unit off 49
5.5 Homescreen overview 49
Status bar symbols 50
Main menu overview 50
5.6 Shortcut list 51
Adjusting Brightness and Contrast 51
5.7 Shared Brightness 52
Enabling Shared Brightness 52
5.8 Initial startup 52
5.9 Accessing the menu 53
5.10 Selecting a language 53
5.11 Switching on the AIS receiver 53
5.12 Selecting a network type 53
5.13 Entering your MMSI number 53
5.14 Entering your ATIS ID 54
Enabling and disabling ATIS mode 55
5.15 Changing the radio region 55
5.16 Switching between high and low transmit power 55
5.17 GNSS (GPS) set up 55
Enabling and disabling the internal GNSS (GPS) 55
Switching between internal and external antenna 55
No position data 55
Entering position manually 56
Selecting (GNSS) GPS information to display 56
Setting time format and offset 56
5.18 Station priority (Ray63 and Ray73 only) 56

Chapter 6 Wireless handset stations 57
6.1 Wireless handsets 58
Wireless handset charging 58
6.2 Connecting a wireless handset to the hub 58
Checking the Wireless hub's password 59
Changing your wireless hub's password 59
Changing the hub's wireless channel 59
Changing the Wireless hub's name 59
6.3 Connecting the wireless speaker to the Wireless handset 59
Disconnecting a Wireless speaker 60
6.4 Wireless set-up menu options 60
Wireless hub set-up menu options 60
Wireless handset not connected menu 61

Chapter 7 Digital selective calling (DSC) 63
7.1 Digital Selective Calling (DSC) 64
7.2 Distress calls 64
Making a designated distress call 64
Making a distress call 65
Making a Mayday call 65
Cancelling a distress call before transmission 65
Cancelling a distress call after transmission 65
Receiving a distress call 66
Ignoring a distress call 66
Acknowledging a distress call 66
Manually relaying a distress call 66
Distress relays sent by other stations 66

81381-3-en-US_A5_PRINT.pdf 7
5/4/2020 3:26:30 PM

7.3 Urgency calls 67
Making an urgency call 67
Receiving an urgency call 67
7.4 Safety calls 67
Making a safety call 67
Receiving a safety call 67
7.5 Individual (routine) calls 67
Making an Individual call 68
Receiving an Individual call 68
7.6 Group calls 68
Making a group call 68
Receiving a group call 68
7.7 Position requests 68
Making a position request 68
Responding to a position request 69
Setting automatic response to position requests 69
7.8 Phonebook 69
Adding a Phonebook entry 69
Editing a Ponebook entry 69
Deleting a Phonebook entry 69
7.9 Call logs 69
Accessing the call logs 70
7.10 Test calls 70
Making a Test call 70
Receiving a test call 70
7.11 DSC set-up menu options 70

Chapter 8 VHF operations 73

8.1 Watch modes 74
Setting Watch mode 74
8.2 Scan Mode 74
Setting Scan mode 74
8.3 Priority channels 74
Switching between priority channels 74
Setting a second priority channel 74
8.4 Sensitivity 74
Switching sensitivity modes 74
8.5 Private channels 74
Selecting a private channel set 75
8.6 Automatic Transmitter Identification System (ATIS) and Marcom-C mode 75
Enabling and disabling ATIS mode 75
8.7 AIS receiver 75
Switching AIS on and off 75
8.8 Set-up menu options 75
Display Set-up menu 77
Shared Brightness menu 77

Chapter 9 Hailer, Fog horn, and Intercom 79

9.1 Hailer Fog Intercom menu 80
9.2 Loud hailer 80
Using the hailer 80
9.3 Fog horn 80
Using the fog horn in manual mode 80
Using automatic fog horn modes 80
Switching off Fog Horn mode 81
9.4 Intercom 81
Using the intercom 81
Responding to the intercom 81

81381-3-en-US_A5_PRINT.pdf 8
5/4/2020 3:26:30 PM

Chapter 10 Maintenance 83
10.1 Maintenance 84
Routine checks..... 84
Unit cleaning instructions 84
Chapter 11 Troubleshooting 85
11.1 Troubleshooting 86
Performing a system reset..... 86
System test 86
Checking for RF interference..... 86
11.2 Power up troubleshooting 87
11.3 Audio troubleshooting (transmission / reception)..... 89
Passive speaker troubleshooting..... 90
11.4 GNSS (GPS) troubleshooting 91
11.5 DSC troubleshooting 92
Obtain MMSI (Maritime Mobile Service Identity) number 92
11.6 AIS troubleshooting (Ray70 / 73 / 91 only)..... 93
11.7 Wired handset troubleshooting..... 94
11.8 Wireless troubleshooting (Ray63 / 73 / 90 / 91 only) 95
LED diagnostics - Wireless (Active) speaker 97
Chapter 12 Technical support..... 99
12.1 Raymarine product support and servicing..... 100
12.2 Viewing product information..... 100
12.3 Learning resources 101
Chapter 13 Technical specification 103
13.1 Technical specification — Ray53 104
13.2 Technical specification — Ray63 105
13.3 Technical specification — Ray73..... 106
13.4 Technical specification — Wired handset (Raymic) 107
13.5 Technical specification - Wired (Passive) speaker 108
13.6 Technical specification - Wireless hub 108
13.7 Technical specification - Wireless handset 108
13.8 Technical specification - Wireless handset charging holster 108
13.9 Technical specification - Wireless (Active) speaker..... 109
Chapter 14 Spares and accessories 111
14.1 Accessories 112
14.2 Ray53 / Ray63 / Ray73 spares 112
14.3 SeaTalkng ® cables and accessories 112
Appendix A NMEA 0183 sentences 115
Appendix B NMEA 2000 PGN list.....116
Appendix C MMSI Regulatory bodies and application submissions.....118
Appendix D VHF Channels 120
Appendix E Phonetic alphabet..... 135
Appendix F Prowords 136

81381-3-en-US_A5_PRINT.pdf 9
5/4/2020 3:26:30 PM

Chapter 1: Important information

Certified Installation

Raymarine recommends certified installation by a Raymarine approved installer. A certified installation qualifies for enhanced product warranty benefits. Contact your Raymarine dealer for further details, and refer to the separate warranty document packed with your product.

Warning: Product installation and operation

- This product must be installed and operated in accordance with the instructions provided. Failure to do so could result in personal injury, damage to your vessel and/or poor product performance.
- Raymarine recommends certified installation by a Raymarine approved installer. A certified installation qualifies for enhanced product warranty benefits. Contact your Raymarine dealer for further details, and refer to the separate warranty document packed with your product.

Warning: Potential ignition source

This product is NOT approved for use in hazardous/flammable atmospheres. Do NOT install in a hazardous/flammable atmosphere (such as in an engine room or near fuel tanks).

Warning: 12 Volt dc only

This product must only be connected to a **12 volt dc** power source.

Warning: Chassis grounding

Do NOT ground this product using the chassis ground terminal.

Grounding this product to a vessel's RF ground may cause galvanic corrosion.

Warning: VHF Antenna isolation

To prevent galvanic corrosion your VHF antenna must be isolated from any vessel metalwork using a suitable, insulated (e.g. plastic) mounting bracket.

Warning: Positive ground systems

Do not connect this unit to a system which has positive grounding.

Warning: Switch off power supply

Ensure the vessel's power supply is switched OFF before starting to install this product. Do NOT connect or disconnect equipment with the power switched on, unless instructed in this document.

FCC

Compliance Statement

This device complies with Part 15 of the FCC Rules. Operation is subject to the following two conditions:

1. This device may not cause harmful interference.
2. This device must accept any interference received, including interference that may cause undesired operation.

1. Reorient or relocate the receiving antenna.
2. Increase the separation between the equipment and receiver.

81381-3-en-US_A5_PRINT.pdf 11

5/4/2020 3:26:30 PM

3. Connect the equipment into an outlet on a circuit different from that to which the receiver is connected.
4. Consult the dealer or an experienced radio / TV technician for help.

Innovation, Science and Economic Development Canada (ISED)

This device complies with RSS standard(s).

Operation is subject to the following two conditions:

1. This device may not cause interference; and
2. This device must accept any interference, including interference that may cause undesired operation of the device.

This Class B digital apparatus complies with Canadian ICES-003.

Innovation, Sciences et Développement économique Canada (Français)

Cet appareil est conforme aux normes d'exemption de RSS.

Son fonctionnement est soumis aux deux conditions suivantes:

1. cet appareil ne doit pas causer d'interférence, et
2. cet appareil doit accepter toute interférence, notamment les interférences qui peuvent affecter son fonctionnement.

Cet appareil numérique de la classe B est conforme à la norme NMB-003 du Canada.

Warning: Maximum Permissible Exposure

For optimal radio performance and minimal human exposure to Radio Frequency (RF) electromagnetic energy, you must ensure that the antenna is:

- connected to the radio before transmitting
- located where it will be away from people
- located at least 1.8 meters (5.9 feet) from the radio's main unit

Failure to observe these guidelines may expose those within the Maximum Permissible Exposure (MPE) radius to RF radiation absorption that exceeds the FCC MPE limit. It is the radio operator's responsibility to ensure that no person comes within this radius.

Caution: Perform regular radio checks

Perform regular radio checks when using your vessel, as recommended in radio training and certification schemes and radio equipment rules of use.

Caution: Ensure proper radio use

Under no circumstances should a DSC distress alert be sent from your radio for test purposes. Such action is a violation of rules of use for radio equipment, and can result in heavy fines.

Water ingress

Water ingress disclaimer

Although the waterproof rating capacity of this product meets the stated water ingress protection standard (refer to the product's *Technical Specification*), water intrusion and subsequent equipment failure may occur if the product is subjected to high-pressure washing. Raymarine will not warrant products subjected to high-pressure washing.

Disclaimer

Raymarine does not warrant that this product is error-free or that it is compatible with products manufactured by any person or entity other than Raymarine.

Raymarine is not responsible for damages or injuries caused by your use or inability to use the product, by the interaction of the product with products manufactured by others, or by errors in information utilized by the product supplied by third parties.

Declaration of Conformity

FLIR Belgium BVBA declares that the radio equipment types listed below are in compliance with the Radio Equipment Directive 2014/53/EU.

Product	Part number
Ray53	E70524
Ray63	E70516
Ray73	E70517

The original Declaration of Conformity certificate may be viewed on the relevant product page at www.raymarine.com/manuals.

81381-3-en-US_A5_PRINT.pdf 12 5/4/2020 3:26:30 PM

Product disposal

Dispose of this product in accordance with the WEEE Directive.

The Waste Electrical and Electronic Equipment (WEEE) Directive requires the recycling of waste electrical and electronic equipment which contains materials, components and substances that may be hazardous and present a risk to human health and the environment when WEEE is not handled correctly.

Equipment marked with the crossed-out wheeled bin symbol indicates that the equipment should not be disposed of in unsorted household waste.
Local authorities in many regions have established collection schemes under which residents can dispose of waste electrical and electronic equipment at a recycling center or other collection point. For more information about suitable collection points for waste electrical and electronic equipment in your region, refer to the Raymarine website: www.raymarine.eu/recycling.

Warranty registration

To register your Raymarine product ownership, please visit www.raymarine.com and register online.

It is important that you register your product to receive full warranty benefits. Your unit package includes a bar code label indicating the serial number of the unit. You will need this serial number when registering your product online. You should retain the label for future reference.

IMO and SOLAS

The equipment described within this document is intended for use on leisure marine boats and workboats NOT covered by International Maritime Organization (IMO) and Safety of Life at Sea (SOLAS) Carriage Regulations.

Technical accuracy

To the best of our knowledge, the information in this document was correct at the time it was produced. However, Raymarine cannot accept liability for any inaccuracies or omissions it may contain. In addition, our policy of continuous product improvement may change specifications without notice. As a result, Raymarine cannot accept liability for any differences between the product and this document. Please check the Raymarine website (www.raymarine.com) to ensure you have the most up-to-date version(s) of the documentation for your product.

81381-3-en-US_A5_PRINT.pdf 13 5/4/2020 3:26:30 PM

Chapter 2: Document and product information

Chapter contents

- 2.1 Product documentation on page 16
- 2.2 Product overview on page 16
- 2.3 Applicable products on page 17
- 2.4 Parts supplied – Ray53 on page 18
- 2.5 Parts supplied – Ray63 / Ray73 on page 19
- 2.6 Licensing on page 19
- 2.7 Obtain MMSI (Maritime Mobile Service Identity) number on page 20
- 2.8 Automatic Transmitter Identification System (ATIS) on page 21
- 2.9 Software updates on page 21

2.1 Product documentation

The following documentation is applicable to your product:

Description	Part number
Installation and operation instructions	81381 (This document)
Ray53 mounting template	87218
Ray63 / Ray73 mounting template	87219

All documents are available to download in pdf format from the Raymarine website www.raymarine.com/manuals.

SeaTalkng® documentation

Description	Part number
SeaTalkng® reference manual Planning and connection of systems based around the SeaTalkng® network.	81300
SeaTalk — SeaTalkng® converter installation instructions Installation and connection of the SeaTalk — SeaTalkng® converter.	87121

User manuals Print Shop

Raymarine provides a Print Shop service, enabling you to purchase a high-quality, professionally-printed manual for your Raymarine product.

Printed manuals are ideal for keeping onboard your vessel, as a useful source of reference whenever you need assistance with your Raymarine product.

Visit http://www.raymarine.co.uk/view/?id=5175 to order a printed manual, delivered directly to your door.

For further information about the Print Shop, please visit the Print Shop FAQ pages: http://www.raymarine.co.uk/view/?id=5751.

Note:

- Accepted methods of payment for printed manuals are credit cards and PayPal.
- Printed manuals can be shipped worldwide.
- Further manuals will be added to the Print Shop over the coming months for both new and legacy products.
- Raymarine user manuals are also available to download free-of-charge from the Raymarine website, in the popular PDF format. These PDF files can be viewed on a PC / laptop, tablet, smartphone, or on the latest generation of Raymarine multifunction displays.

Document conventions

The following conventions are used throughout this document.

Procedures for performing specific tasks using the product's user interface.

The term "Select" is used to refer to the action of:

- Touchscreen control — using your finger to select a menu option or item on the screen.
- Physical buttons — Highlighting an item using the navigational controls and confirming the selection by pressing the **OK** button.

Examples:

- Select **Ok** to confirm your selection.
- Select **Set-up**

Procedures for navigating menu hierarchies.

Menu hierarchies are used in this document to provide a quick summary on how to access a particular function or menu option.

Examples:

- The internal sonar module is turned off from the Fishfinder application menu: **Menu** > **Set-up** > **Sounder Set-up** > **Internal Sounder**.
- The internal GPS can be switched off from the Set-up menu: **Menu** > **Set-up** > **GPS Set-up** > **Internal GPS**.

Document illustrations

Your product and if applicable, its user interface may differ slightly from that shown in the illustrations in this document, depending on product variant and date of manufacture.

All images are provided for illustration purposes only.

2.2 Product overview

The Ray53, Ray63 and Ray73 are 12 V dc, Class D Digital Selective Calling (DSC) VHF radios. DSC enables you to make a selective call to a specific radio, and to transmit and receive position information to and from the selected radio. DSC also allows transmission of a distress alert to all radios within range at the touch of a button. Once a DSC request is sent and acknowledged, voice communication is carried out on the channel chosen by the caller. The radio can transmit and receive on all available US, Canadian, International and Private marine VHF channels.

Your product includes the following features:

- Built-in GNSS (GPS) receiver with internal antenna and an external antenna connection.
- Built-in GNSS (GPS) receiver can be used as a source of GNSS position data for other devices in your network.
- Networkable: Connect to NMEA 2000 / SeaTalkng® or NMEA 0183.
- Expandible:
  - Add an optional passive speaker (all variants).
  - Add a second fully functional wired handset station (Ray63 / Ray73 only), or

81381-3-en-US_A5_PRINT.pdf 16 5/4/2020 3:26:30 PM

– Connect the optional Wireless hub to the second station connector, allowing up to 2 fully functioning wireless handset stations.

– Add an optional Loud Hailer the Ray73 can be used as a fog horn or loud public address (PA) system.

- Built-in AIS receiver (Ray73 only).

2.3 Applicable products

This document is applicable to the following products:

	Name	Part number	Features
	E70524	Ray53	• SeaTalkng ® / NMEA 2000 • NMEA 0183 • Built-in GNSS (GPS and GLONASS) receiver • Passive speaker connection
	E70516	Ray63	Same as Ray53 with additional: • Up to 2 Wired handset stations, or • 1 Wired handset station and up to 2 Wireless handset stations
	E70517	Ray73	Same as Ray63 with additional: • Built-in AIS receiver • Loud hailer connection

Required additional components

Your product requires a VHF antenna.

Part number	Description
N/A	3rd Party 50 ohm VHF antenna

Optional additional components

GNSS / GPS antenna

You can improve the performance of your radio's built-in GNSS (GPS) receiver using an external antenna.

Part number	Description
A80288	Passive GNSS (GPS) antenna

Ray53

Part number	Description
A80542	Wired speaker (passive)

Ray63 / Ray73

Part number	Description
A80542	Wired speaker (passive)
A80289	Wired handset (Raymic)

Ray73

Part number	Description
M95435	Loud Hailer

Extension cables

The following extension cables are available:

Part number	Description
A80291	Wired handset extension cable 5 m (16.4 ft)
A80292	Wired handset extension cable 10 m (32.8 ft)

Part number	Description
A80290	Wired handset extension cable 15 m (49.2 ft)
A80297	Wired handset adaptor cable with male RCA audio (400 mm 1.3 ft)

Optional wireless components

Your radio supports connection of wireless handsets and speakers via a wireless hub, enabling creation of additional fully functional, wireless handset stations.

The following wireless components are available:

Part number	Component	Description
A80540	Wireless hub	Allows connection of up to 2 Wireless handsets.
R70739	Wireless hub adaptor	Allows Wireless hub connection to Ray63 / Ray73 radios.
A80544	Wireless handset (including holster)	Wireless handset with inductive charging and wireless speaker connection.
A80543	Wireless speaker (Active)	Connects to the Wireless handset.

Compatible MFDs

Your radio can be integrated with compatible MFDs, enabling DSC distress message information and position data on your MFD screen.

Compatible LightHouse™ 3 MFDs

	Axiom™		Axiom™ Pro
	Axiom™ XL		eS Series
	gS Series		

Compatible LightHouse™ 2 MFDs

	eS Series		gS Series
	e Series		c Series
	a Series		

Compatible Legacy MFDs

	E-Series Widescr-een		C-Series Widescr-een
	E-Series Classic		G-Series

Incompatible MFDs

This product is NOT compatible with the following legacy Raymarine multifunction displays.

Legacy MFDs

	C-Series Classic		A-Series Classic

2.4 Parts supplied – Ray53

The parts listed below are supplied with the Ray53.

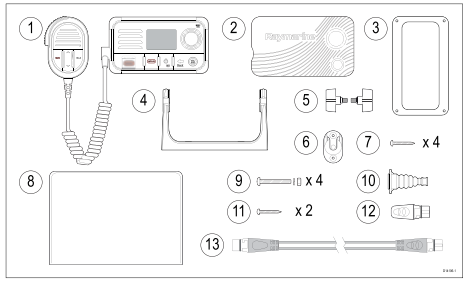

Item	Description
1	VHF Radio
2	Sun cover
3	Panel mount gasket
4	Mounting bracket (Trunnion)
5	Mounting bracket knobs
6	Fistmic hook plate
7	4 x M4x25 screws (For Bracket (Trunnion) mounting)

81381-3-en-US_A5_PRINT.pdf 18

5/4/2020 3:26:30 PM

Item	Description
8	Documentation
9	4 x M4 nuts, spring washers and M4x25 machine screws (For Panel mounting)
10	Protective antenna boot
11	2 x M4x12 screws (For Fistmic hook plate mounting).
12	SeaTalkng ® blanking plug
13	SeaTalkng ® 400 mm (15.7 in.) spur cable

2.5 Parts supplied – Ray63 / Ray73

The parts listed below are supplied with the Ray63 and Ray73.

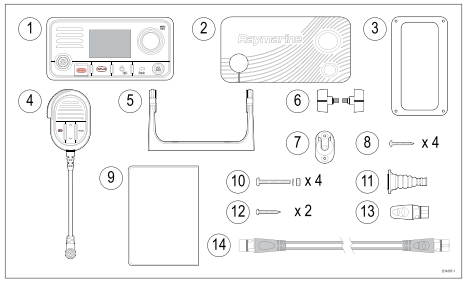

Item	Description
1	VHF Radio
2	Sun cover
3	Panel mount gasket
4	Fistmic
5	Mounting bracket (Trunnion)
6	Mounting bracket knobs
7	Fistmic hook plate
8	4 x M4x25 screws (For Bracket (Trunnion) mounting)
9	Documentation
10	4 x M4 nuts, spring washers and M4x25 machine screws (For Panel mounting)
11	Protective antenna boot
12	2 x M4x12 screws (For Fistmic hook plate mounting).
13	SeaTalkng ® blanking plug
14	SeaTalkng ® 400 mm (15.7 in.) spur cable

2.6 Licensing

Prior to using this product please check your national requirements for both operator and equipment licensing.

USA licensing requirements

FCC station license requirement

An FCC Ship Radio Station License and Call Sign are not required for most recreational vessels travelling in US waters. However, you must obtain a license if your vessel travels to foreign ports.

Ships that use MF/HF single side-band radio, satellite communications, or telegraphy must be licensed by the FCC. You can obtain a Station License by filing FCC Form 605.

Canada licensing requirements

You do not need a license to operate this product within the sovereign waters of Canada or the United States of America (USA).

You will need a license to operate this radio outside of Canada or the USA. To obtain licensing information, visit the Innovation, Science and Economic Development Canada (ISED) (previously known as Industry Canada) website: https://www.tc.gc.ca/eng/marinesafety/oep-navigation-radiocomms-faqs-1489.htm.

Europe and rest of world licensing requirements

Regulations in some areas require that an Operator's license is obtained before operating a VHF radio. It is your responsibility to determine whether a license is required in your area before operating this equipment.

Additional information – Ray53

The following additional information is required for completing a license application in Canada and the US.

ISED ID	4069B-RAY501D
FCC ID	PJ5–RAY501
FCC Type accepted	Parts 2, 15 and 80
Output power	0.75 watt (low) and 25 watt (high)
Modulation	FM
Frequency range	155.500 MHz to 163.275 MHz

Additional information – Ray63

The following additional information is required for completing a license application in Canada and the US.

ISED ID	4069B-RAY601D
FCC ID	PJ5–RAY601

81381-3-en-US_A5_PRINT.pdf 19

5/4/2020 3:26:30 PM

FCC Type accepted	Parts 2, 15 and 80
Output power	0.75watt (low) and 25 watt
Modulation	(high) FM
Frequency range	155.500 MHz to 163.275 MHz

Additional information – Ray73

The following additional information is required for completing a license application in Canada and the US.

ISED ID	4069B-RAY701D
FCC ID	PJ5–RAY701
FCC Type accepted	Parts 2, 15 and 80
Output power	0.75watt (low) and 25 watt
Modulation	(high) FM
Frequency range	155.500 MHz to 163.275 MHz

Additional information - wireless handset

ISED ID:	4069B–RAY90W
FCC ID:	PJ5–RAY90W
FCC type accepted	Parts, 2, 15 and 80
Output power	1. 19 dBm 2. 4dBm
Modulation	1. MIMO-OFDM/DSSS/CCK 2. GFSK
Frequency	1. 2412MHz to 2472MHz 2. 2412MHz to 2472MHz

Note:
ISED previously IC (Industry Canada)

Additional information - wireless charging holster

ISED ID:	4069B–RAYCGR
FCC ID:	PJ5–RAYCGR
FCC type accepted	Parts, 2, 15 and 80
Output power	5 watt
Modulation	QI
Frequency	110KHz to 205KHz

Note:
ISED previously IC (Industry Canada)

Additional information - wireless hub

ISED ID:	4069B–RAYHUB
FCC ID:	PJ5–RAYHUB
FCC type accepted	Parts, 2, 15 and 80
Output power	19 dbm
Modulation	MIMO-OFDM/DSSS/CCK
Frequency	2412-2472MHz

Note:
ISED previously IC (Industry Canada)

Additional information - wireless speaker

ISED ID:	4069B–RAYSPK
FCC ID:	PJ5–RAYSPK
FCC type accepted	Parts, 2, 15 and 80
Output power	4 dbm
Modulation	GFSK
Frequency	2412MHz to 2472MHz

Note:
ISED previously IC (Industry Canada)

2.7 Obtain MMSI (Maritime Mobile Service Identity) number

Before commencing installation ensure you have obtained an MMSI number for your vessel.

An MMSI is a 9 digit number which is sent over a radio frequency channel in order to identify the originating vessel/station. If your vessel already has an MMSI number (used for a VHF DSC radio) then the same MMSI number must be used to program your product.

Note:
If an MMSI number is not entered, the DSC functionality of your radio will be disabled.

81381-3-en-US_A5_PRINT.pdf 20 5/4/2020 3:26:30 PM

In the United States of America, the MMSI and Static Data must be entered only by a Raymarine® dealer or other appropriately qualified installer of marine communications equipment on board vessels. The user is NOT authorized to do this.

In some areas, a radio operator licence is required before an MMSI number will be issued. You can request an MMSI number from same agency that issues radio or Ship Radio licences in your area.

In Europe and other parts of the world outside of the United States of America, the MMSI and Static data can be set up by the user.

For further details, refer to the relevant Telecommunications Regulatory Body for your area.

Refer to Appendix C **MMSI Regulatory bodies and application submissions**
for a list of contacts for obtaining MMSI numbers for some areas.

Warning: MMSI entry

You can only enter a MMSI number once, if you enter the number incorrectly or need to change your MMSI number, the unit will require re-programming by an authorized Raymarine dealer.

2.8 Automatic Transmitter Identification System (ATIS)

Your product includes ATIS functionality for use on the inland waterways of contracting governments of the *"Regional Arrangement on the Radiocommunication Service for Inland Waterways"* — also known as *"RAINWAT"*.

ATIS adds data at the end of radio transmissions that identifies your station. ATIS operation can be turned on or off as needed via the radio's menu.

An ATIS ID can be obtained from the same agency that issues radio operator licenses in your area.

Your ATIS ID should be programed into your product using the instructions provided.

Note:

Contracting RAINWAT countries include: Austria, Belgium, Bulgaria, Croatia, the Czech Republic, France, Germany, Hungary, Luxembourg, Moldova, Montenegro, the Netherlands, Poland, Romania, Serbia, the Slovak Republic and Switzerland.

Note:

When ATIS is enabled, certain programing steps have been implemented to protect the integrity of the RAINWAT agreement, including the blocking of DSC functions when ATIS is enabled.

2.9 Software updates

Raymarine periodically releases software updates for its products. These updates provide new features, current feature enhancements and bug fixes which improves product performance and usability.

Check the Raymarine website: ww.raymarine.com/software regularly to ensure you have the latest software for your products.

The software update process requires a compatible MFD, powered by LightHouse™ 2 release 13.37 or above, or LightHouse™ 3 version LH3.2 or above.

- Please refer to the operation instructions for your MFD / operating system version for details on how to perform the software update, alternatively refer to the instructions provided on the software download area for your product on the Raymarine website: ww.raymarine.com/software.
- The MFD used to perform the software update must be the designated Data master and be connected / networked to the product being updated.
- If you are in any doubt as to the correct procedure for updating your product software, please refer to your local authorized dealer or Raymarine technical support for assistance.

Caution: Installing software updates

- The software update process is carried out at your own risk. Before initiating the update process ensure you have backed up any important files.
- Ensure that the unit has a reliable power supply and that the update process is not interrupted.
- Damage caused by an incomplete update is not covered by Raymarine warranty.
- By downloading the software update package, you agree to these terms.

Checking software versions

You can check the software version of your radio and connected components.

From the Homescreen:

1. Select **Menu** > **Set-up** > **Maintenance** > **About this unit**.
2. Scroll down.

   Software versions of connected components are displayed.

81381-3-en-US_A5_PRINT.pdf 21

5/4/2020 3:26:30 PM

Chapter 3: Installation

Chapter contents

- 3.1 Selecting a location on page 24
- 3.2 EMC installation guidelines on page 25
- 3.3 Wireless product location requirements on page 26
- 3.4 Product dimensions on page 27
- 3.5 Mounting on page 29

81381-3-en-US_A5_PRINT.pdf 23 5/4/2020 3:26:30 PM

3.1 Selecting a location

Warning: Potential ignition source

This product is NOT approved for use in hazardous/flammable atmospheres. Do NOT install in a hazardous/flammable atmosphere (such as in an engine room or near fuel tanks).

General location requirements

When selecting a location for the unit it is important to consider a number of factors.

To ensure optimum performance, it is recommended that the display is temporarily powered up and tested, at the chosen location, prior to installation.

Ventilation requirements

To provide adequate airflow:

- Ensure that equipment is mounted in a compartment of suitable size.
- Ensure that ventilation holes are not obstructed.
- Ensure adequate separation of equipment.

Water ingress

Base station — Although the Base station is waterproof to IPx6 and IPx7, it is recommended that the Base station is mounted below decks, in an area protected from prolonged and direct exposure to rain and salt spray.

Wired handset — The Handset has been designed to be mounted above or below decks and is rated to IPx6 and IPx7.

Wired (Passive) speaker — The speakers has been designed to be mounted above or below decks and are rated to IPx6 and IPx7.

Mounting surface requirements

When selecting a mounting surface ensure:

- the product will be adequately supported on a secure, flat surface. Do NOT mount units or cut holes in places which may damage the structure of the vessel.
- sufficient space is available around the product.
- there is nothing behind the mounting surface that may be damaged when drilling.

Cable routing requirements

Ensure you have identified the route that all required cables will take and that sufficient space is available to allow connection of cables:

- Unless otherwise stated, a minimum cable bend radius of 100 mm (3.94 in) is required.
- Where necessary, cable supports should be used to prevent stress on connectors.

Electrical interference

Select a location that is far enough away from equipment that may cause interference, such as motors, generators and radio transmitters/receivers.

Power supply

Select a location that is as close as possible to the vessel's DC power supply. This will help to keep cable runs to a minimum.

RF interference

Certain third-party external electrical equipment can cause Radio Frequency (RF) interference with GNSS (GPS), AIS or VHF devices, if the external equipment is not adequately insulated and emits excessive levels of electromagnetic interference (EMI).

Some common examples of such external equipment include LED lighting (e.g.: navigation lights, searchlights and floodlights, interior and exterior lights) and terrestrial TV tuners.

To minimize interference from such equipment:

- Keep it as far away from GNSS (GPS), AIS or VHF products and their antennas as possible.
- Ensure that any power cables for external equipment are not entangled with the power or data cables for these devices.
- Consider fitting one or more high frequency suppression ferrites to the EMI-emitting device. The ferrite(s) should be rated to be effective in the range 100 MHz to 2.5 GHz, and should be fitted to the power cable and any other cables exiting the EMI-emitting device, as close as possible to the position where the cable exits the device.

Compass safe distance

When choosing a suitable location for your product you should aim to maintain the maximum possible distance between the product and any installed compass. This distance should be at least 1 m (3 ft) in all directions. For smaller vessels it may not be possible to achieve this distance. In this situation ensure that the compass is not affected by the product when it is powered on.

GNSS (GPS) location requirements

In addition to general guidelines concerning the location of marine electronics, there are a number of environmental factors to consider when installing equipment with an internal GNSS receiver.

Mounting location

- Above Decks (e.g. open air) mounting: Provides optimal performance. (For equipment with appropriate waterproof rating.)
- Below Decks (e.g. enclosed space) mounting: Performance may be less effective and may require an external antenna or receiver mounted above decks.

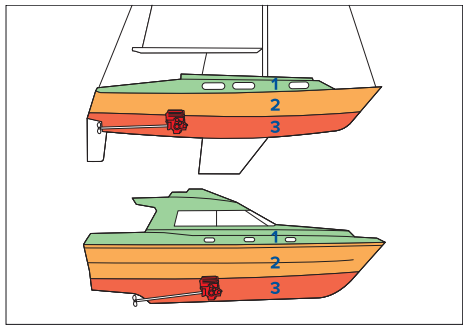

1		This location provides optimal performance (above decks).
2		In this location, performance may be less effective.
3		This location is NOT recommended.

Vessel construction

The construction of your vessel can have an impact on performance. For example, the proximity of heavy structures such as a structural bulkhead, or the interior of larger vessels may result in a reduced signal. The construction materials can also have an impact. In particular, steel, aluminium or carbon surfaces can impact performance. Before locating equipment with an internal antenna below decks, or on a steel, aluminium or carbon construction vessel or surface, seek professional assistance.

Prevailing conditions

The weather and location of the vessel can affect performance. Typically calm clear conditions provide a more accurate position fix. Vessels at extreme northerly or southerly latitudes may also receive a weaker signal. An antenna mounted below decks will be more susceptible to performance issues related to the prevailing conditions.

External GNSS (GPS) antenna location requirements

Your product includes a built-in GNSS (GPS) receiver and antenna. It is also possible to connect and use an external GNSS (GPS) antenna such as the GA150 instead.

When using an external antenna, ensure you follow the location requirements specified in your external antenna's installation instructions.

Note:

When using an external antenna you must select the internal antenna in order for it to be used instead of the external antenna. See the Switching between internal and external antenna procedure.

Antenna mounting and EME exposure

Ensure that your VHF antenna is connected to the radio before transmission.

Raymarine® declares a Maximum Permissible Exposure (MPE) radius of 0.89 meters (2.92ft.) for this system, assuming 25 watts output to an omnidirectional antenna of 9dBi gain or less.

For watercraft with suitable structures, the antenna base must be at least 3.8 meters (12.5 ft) above the main deck to meet the MPE for persons up to 0.89 metres (2.92ft) tall. For watercraft without such structures, the antenna must be mounted so that its base is a minimum of 1.8 meters (5.9 ft.) vertically from heads of all persons.

The antenna must be isolated from the vessel's metalwork using an insulated (e.g. plastic) mounting bracket.

Multiple antenna installations

Important additional considerations when installing multiple antennas.

To prevent potential channel interference when installing two or more VHF radios on the same vessel, ensure that the antennas are located at least 2.4 m (8 ft.) away from each other.

Loud hailer location requirements

To avoid audio feedback, ensure that the loud hailer is at least 3 m (9.8 ft) away from the VHF base unit and any handset or fistmic at all times. When talking, ensure that the handset or fistmic is pointing in the opposite direction to the loud hailer.

3.2 EMC installation guidelines

Raymarine® equipment and accessories conform to the appropriate Electromagnetic Compatibility (EMC) regulations, to minimize electromagnetic interference between equipment and minimize the effect such interference could have on the performance of your system

Correct installation is required to ensure that EMC performance is not compromised.

Note:

In areas of extreme EMC interference, some slight interference may be noticed. Where this occurs the product and the source of the interference should be separated by a greater distance.

For **optimum** EMC performance we recommend that wherever possible:

- Raymarine® equipment and cables connected to it are:
  - At least 1 m (3 ft) from any equipment transmitting or cables carrying radio signals e.g. VHF radios, cables and antennas. In the case of SSB radios, the distance should be increased to 2 m (7 ft).
  - More than 2 m (7 ft) from the path of a Radar beam. A Radar beam can normally be assumed to spread 20 degrees above and below the radiating element.
- The product is supplied power from a separate battery from that used for engine start. This is important to prevent erratic behavior and data loss which can occur if the engine start does not have a separate battery.
- Only Raymarine® specified cables are used.
- Cables are not cut or extended, unless doing so is detailed in the installation instructions.

Note:

Where constraints on the installation prevent any of the above recommendations, always ensure the maximum possible separation between different items of electrical equipment, to provide the best conditions for EMC performance throughout the installation.

Suppression ferrites

- Raymarine cables may be pre-fitted or supplied with suppression ferrites. These are important for correct EMC performance. If ferrites are supplied separately to the cables (i.e. not pre-fitted), you must fit the supplied ferrites, using the supplied instructions.

81381-3-en-US_A5_PRINT.pdf 25 5/4/2020 3:26:30 PM

- If a ferrite has to be removed for any purpose (e.g. installation or maintenance), it must be replaced in the original position before the product is used.
- Use only ferrites of the correct type, supplied by Raymarine or its authorized dealers.
- Where an installation requires multiple ferrites to be added to a cable, additional cable clips should be used to prevent stress on the connectors due to the extra weight of the cable.

Connections to other equipment

Requirement for ferrites on non-Raymarine cables.

If your product is to be connected to other equipment using a cable not supplied by Raymarine, a suppression ferrite MUST always be attached to the end of the cable nearest to the Raymarine product.

3.3 Wireless product location requirements

The optional wireless hub, handset and active speakers require further considerations when selecting a mounting location

Wireless location requirements

A number of factors can influence wireless performance. It is important to ensure you test the connection performance at the desired location before installing wireless-enabled products.

Distance

The distance between wireless products should always be kept to a minimum. Do not exceed the maximum stated range of your wireless product (maximum range will vary for each device).

Wireless performance degrades over distance, so products farther away will receive less network bandwidth. Products installed close to their maximum wireless range may experience slow connection speeds, signal dropouts, or not being able to connect at all.

Line of sight

For best results the wireless product should have a clear, direct line of sight to the product it will be connected to. Any physical obstructions can degrade or even block the wireless signal.

The construction of your vessel can also have an impact on wireless performance. For example, metal structural bulkheads and roofing will reduce — and in certain situations — block the wireless signal.

If the wireless signal passes through a bulkhead containing power cables this can also degrade wireless performance.

Reflective surfaces such as metal surfaces, some types of glass and even mirrors can drastically affect performance or even block the wireless signal.

Interference and other equipment

Wireless products should be installed at least 1m (3 ft) away from:

- Other wireless-enabled products.
- Transmitting products that send wireless signals in the same frequency range.
- Other electrical, electronic or electromagnetic equipment that may generate interference.

Interference from other people's wireless devices can also cause interference with your products. You can use a third-party wireless analyzer tool / smartphone app to assess the best wireless channel to use (e.g. a channel not in use or one used by the least number of devices).

Pre-installation site survey

Before installing a wireless device, a site survey should be performed to ensure the wireless signal strength at the desired installation location is sufficient to maintain a reliable connection.

You can perform a site survey using your smartphone or tablet and a wireless signal analyzer app, such as "Wi-Fi Analyzer" by Farproc or similar.

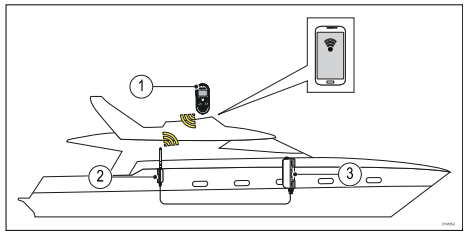

1	Wireless handset
2	Wireless hub
3	VHF Radio

1. Install the wireless analyzer app on your smart device.
2. Connect the wireless hub to your VHF Radio.
3. Move the hub to its desired location.

   The hub should be located as close to the desired location of the wireless handset as possible. An additional wireless hub antenna extension cable may also be required; this is available to order as accessory A80541, and provides an additional 5 meters of cable length.

4. Power on your VHF Radio.
5. Make a note of your wireless hub's name (SSID).

   *The wireless hub's name can be found using a wired handset: **Menu** > **Set-up** > **Wireless set-up** > **Wireless hub set-up** > **Hub name**. (By default the hub name will be RM followed by the full part number and serial number of the VHF Radio it is connected to, e.g.: RM E70517 107828).*

6. Go to the location you have chosen for your wireless handset.
7. Open the wireless analyzer app on your smart device and scan available networks.
8. Establish the signal strength of your hub's wireless network at the chosen location.

81381-3-en-US_A5_PRINT.pdf 26 5/4/2020 3:26:30 PM

For reliable wireless performance the signal strength should be better than –75dBm, the closer the signal is to zero the better the wireless performance will be (e.g. –40dBm is better than –75dBm).

9. If the wireless channel your hub is using is congested with wireless signals then change your hub's wireless channel (**Menu > Set-up > Wireless set-up > Wireless hub set-up > Wi-Fi channel**), and select a different wireless channel.

   Try channels 1, 6 and 11 first as these are usually the preferred wireless channels. Otherwise try the channel that has the least congestion.

10. If you have a very weak or intermittent signal then you will need to investigate further, please refer to the wireless location requirements to help establish what may be causing the problem.
11. Repeat steps 6 to 10 with each wireless handset you wish to install.

3.4 Product dimensions

Product dimensions — Ray53

Panel mount dimensions

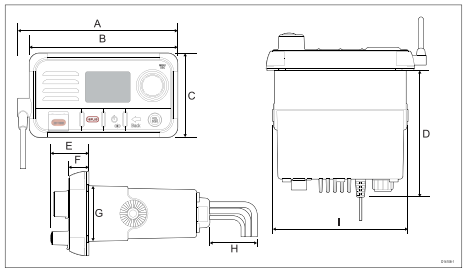

A	168 mm (6.6 in)
B	156 mm (6.1 in)
C	88.5 mm (3.5 in)
D	134 mm (5.3 in)
E	39.75 mm (1.6 in)
F	21.5 mm 0.85 in)
G	59 mm (2.3 in)
H	25 mm 1.0 in)
I	143.6 mm (5.7 in)

Bracket mount dimensions

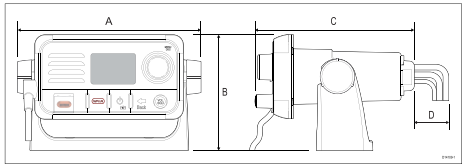

A	192.5 mm (7.6 in)
B	121 mm (4.8 in)
C	173.75 mm (6.8 in)
D	25 mm (1 in)

Product dimensions — Ray63 / Ray73

Panel mount dimensions

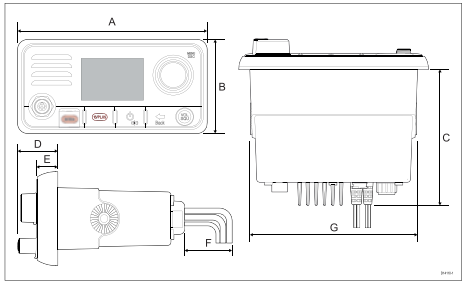

A	199 mm (7.83 in)
B	98.5 mm (3.88 in)
C	143 mm (5.63 in)
D	61.6 mm (2.43 in)
E	16.6 mm (0.65 in)
F	90 mm 3.54 in)
G	176 mm (6.93 in)

Bracket mount dimensions

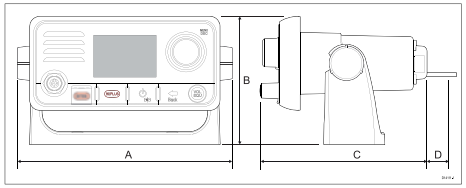

A	226 mm (8.89 in)
B	133 mm (5.24 in)

81381-3-en-US_A5_PRINT.pdf 27 5/4/2020 3:26:30 PM

C	204.6 mm (8.05 in)
D	90 mm (3.54 in)

A maximum cable bend radius of 90 mm (3.54 in) is required to allow for the handset cable connector.

Product dimensions — Fistmic

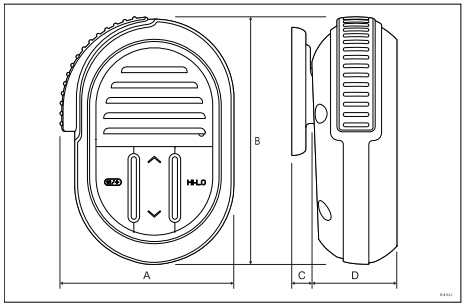

A	68.5 mm (2.7 in)
B	97.6 mm (3.8 in)
C	8 mm (0.3 in)
D	36 mm (1.4 in)

The Fistmic's fitted, coiled lead can be extended comfortably to approximately 1 meter (3.3 ft.)

Product dimensions - Wired handset (Raymic)

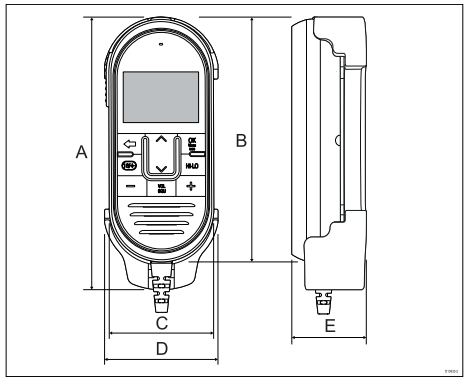

A	167.34 mm (6.59 in)
B	151 mm (5.94 in)
C	66.9 mm (2.63 in)
D	70 mm (2.76 in)
E	46.7 mm (1.84 in)

The Handset's fitted, coiled lead can be extended comfortably to approximately 1 meter (3.3 ft.). Ensure sufficient space is available below the desired mounting area to accommodate the cable.

Product dimensions - speakers

The dimensions for the Passive and Active speakers are shown below.

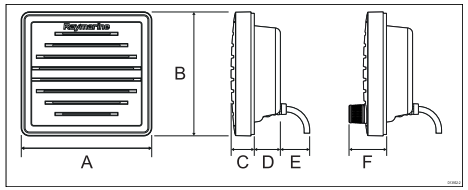

A	118.5 mm (4.67 in)
B	112.5 mm (4.43 in)
C	18.3 mm (0.72 in)
D	26.4 mm (1.04 in)
E	25 mm (0.98 in)
F	30.6 mm (1.20 in)

The Passive speaker includes a fitted 2 m (6.56 ft) audio cable terminated with a male RCA plug.

The Active speaker includes a fitted 2 m (6.56 ft) power cable terminated with a spade connectors.

81381-3-en-US_A5_PRINT.pdf 28

5/4/2020 3:26:30 PM

Product dimensions - Wireless hub

The dimensions for the wireless hub are shown below.

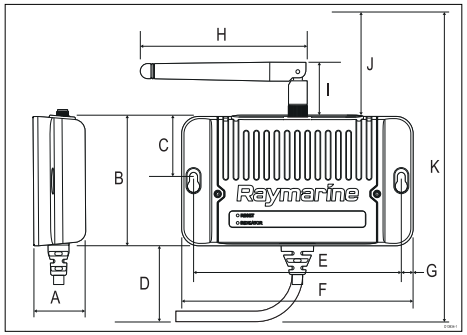

A	26.7 mm (1.05 in)
B	68.04 mm (2.68 in)
C	32.16 mm (1.27 in)
D	70 mm (2.76 in)
E	109.2 mm (4.30 in)
F	121.6 mm (4.79 in)
G	6.2 mm (0.24 in)
H	87.72 mm (3.45 in)
I	29.14 mm (1.15 in) Min
J	106.95 mm (4.21 in) Max
K	244.99 mm (9.65 in)

The Wireless hub includes a fitted 5 m (16.4 ft) cable for connection to your VHF Radio.

If the installation requires the cable to be passed through a bulkhead or panelling a 20 mm (0.79 in) diameter hole is required to allow the connector to pass through.

Product dimensions - Wireless handset and holster

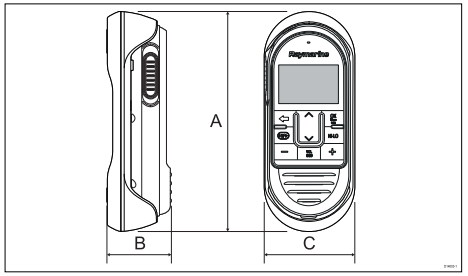

A	173.33 mm (6.82 in)
B	50.5 mm (1.99 in)
C	71.41 mm (2.81 in)

The charging holster is supplied with a fitted 2 meter (6.56 ft) power cable terminated with bare ended wires.

3.5 Mounting

Tools required for installation

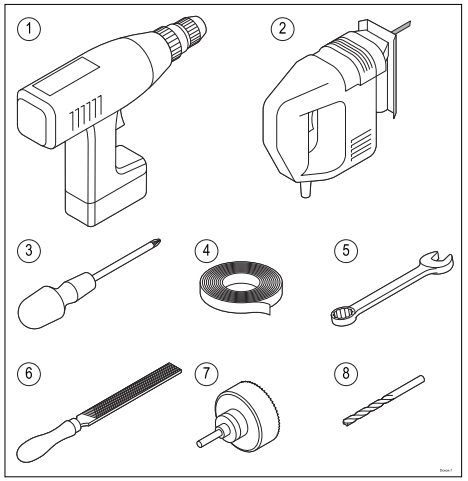

1. Power drill
2. Jigsaw for panel mount cut-out
3. Pozi-drive screwdriver
4. Adhesive tape
5. 7 mm (9/32”) Wrench (spanner) for bracket mounting fixings
6. File for panel mount cut out
7. Hole saw for panel mounting (For hole saw size refer to your product’s mounting template)
8. Drill bit for surface mounting or bracket mounting

81381-3-en-US_A5_PRINT.pdf 29 5/4/2020 3:26:30 PM

Mounting options

The product can be mounted in the following configurations.

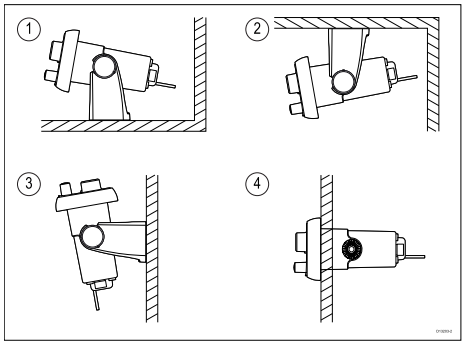

1. Bracket mount — Table top
2. Bracket mount — Overhead
3. Bracket mount — Bulkhead
4. Panel mount

Bracket mounting

Follow the steps below to mount the product on it's bracket.

Before mounting the unit ensure that you have:

- Selected a suitable location, ensuring there is nothing behind the mounting surface that may be damaged when drilling.
- Identified the cable connections and route that the cables will take.
- Attached the front bezel.

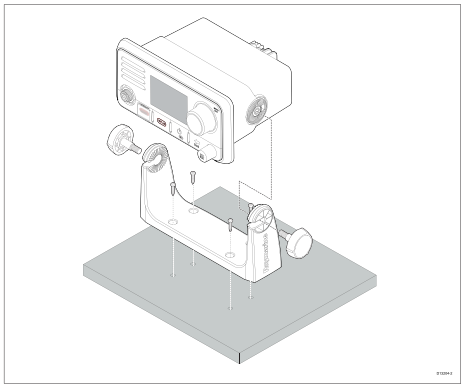

1. Mark the location of the bracket mounting holes on the mounting surface.
2. Drill holes for the mounting fixings using a drill with a suitable sized drill bit.
3. Use the fixings provided to attach the bracket securely to the mounting surface.
4. Attach the unit to the bracket and secure in place using the bracket mounting knobs.

Note:

Drill bit, tap size and tightening torque is dependent on the thickness and type of material the unit is to be mounted on.

Panel mounting — Ray53

Removing the mounting hole covers

Before the radio can be panel mounted the mounting hole covers must be removed.

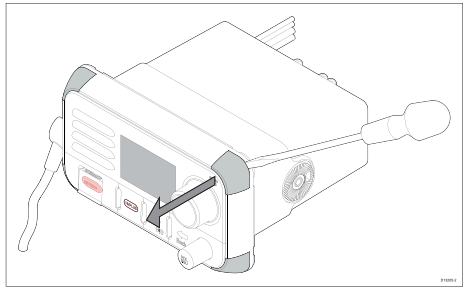

1. Using a flat blade screw driver, insert the tip of the screw driver in the slot between the back of the cover and the unit.
2. Carefully lever the cover forward away from the unit.
3. Repeat steps 1 and 2 for the remaining mounting hole covers.

Drilling out the mounting holes

When panel mounting the radio the mounting holes must be drilled out.

Guides for the mounting holes can be found on the corners of the unit, under the mounting hole covers.

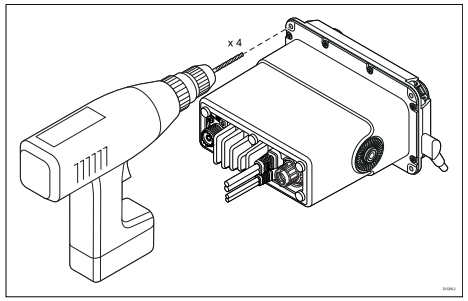

81381-3-en-US_A5_PRINT.pdf 30

5/4/2020 3:26:31 PM

1. Using a drill and a 4 mm (5/32) drill bit, drill out the 4 mounting holes.

Holes should be drilled from the front of the unit, taking care not to apply too much force to the drill.

Panel mounting

To panel mount the radio follow the steps below.

Before mounting the product, ensure that you have:

- Selected a suitable location, ensuring there is nothing behind the mounting surface that may be damaged when drilling / cutting.
- Identified the cable connections and route that the cables will take.
- Removed the mounting hole covers.
- Drilled out the mounting holes on the unit.

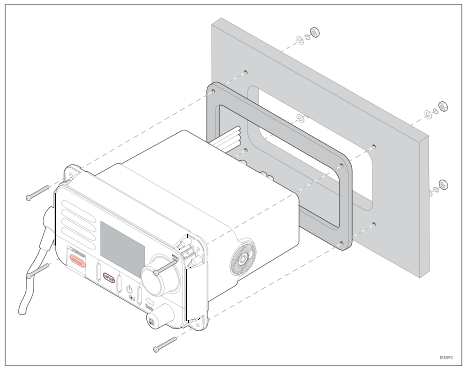

1. Check the selected location for the unit. A clear, flat area with suitable clearance behind the panel is required.
2. Fix the supplied mounting template to the selected location, using masking or self-adhesive tape.
3. Using a suitable hole saw (the size is indicated on the template), make a hole in each corner of the cut-out area.
4. Using a suitable saw, cut along the inside edge of the cut-out line.
5. Ensure that the unit fits into the removed area and then file around the rough edge until smooth.
6. Drill 4 holes as indicated on the template to accept the fixings.
7. Remove the backings from the supplied gasket.
8. Place the gasket in position on the back of the unit and press firmly onto the flange.
9. Connect the power, and other cables to the unit.
10. Slide the unit into place and secure using the fixings provided.
11. Attach the mounting hole covers.

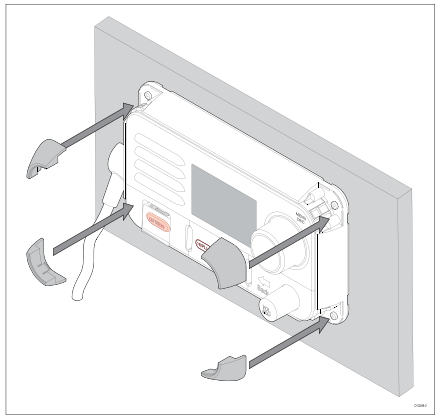

Note:

The supplied gasket provides a seal between the unit and a suitably flat and stiff mounting surface or binnacle. The gasket should always be used. It may also be necessary to use a marine-grade sealant if the mounting surface or binnacle is not entirely flat and stiff or has a rough surface finish.

Panel mounting — Ray63 / Ray73

Drilling out the mounting holes

Before panel mounting the Radio the mounting holes must be drilled out.

Guides for the mounting holes can be found in the corners of the unit, under the front bezel.

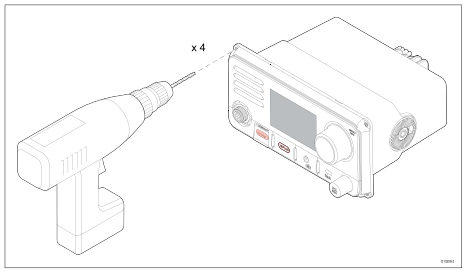

1. Using a drill and a 4 mm (5/32) drill bit, drill out the 4 mounting holes.

Holes should be drilled from the front of the unit, taking care not to damage the unit by applying too much force to the drill.

Panel mounting

To panel mount the Radio follow the steps below.

Before mounting the product, ensure that you have:

- Selected a suitable location, ensuring there is nothing behind the mounting surface that may be damaged when drilling / cutting.
- Identified the cable connections and route that the cables will take.
- Drilled out the mounting holes on the unit.
- Removed the front bezel.

81381-3-en-US_A5_PRINT.pdf 31 5/4/2020 3:26:31 PM

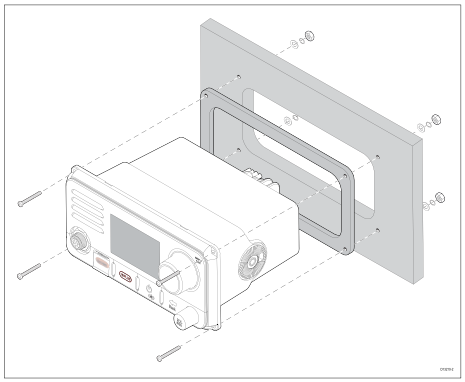

1. Check the selected location for the unit. A clear, flat area with suitable clearance behind the panel is required.
2. Fix the supplied mounting template to the selected location, using masking or self-adhesive tape.
3. Using a suitable hole saw (the size is indicated on the template), make a hole in each corner of the cut-out area.
4. Using a suitable saw, cut along the inside edge of the cut-out line.
5. Ensure that the unit fits into the removed area and then file around the rough edge until smooth.
6. Drill 4 holes as indicated on the template to accept the fixings.
7. Remove the backings from the supplied gasket.
8. Place the gasket in position on the back of the unit and press firmly onto the flange.
9. Connect the power, and other cables to the unit.
10. Slide the unit into place and secure using the fixings provided.
11. Attach the front bezel.

Note:

The supplied gasket provides a seal between the unit and a suitably flat and stiff mounting surface or binnacle. The gasket should always be used. It may also be necessary to use a marine-grade sealant if the mounting surface or binnacle is not entirely flat and stiff or has a rough surface finish.

Attaching the front bezel

After installation of the Radio the front bezel can be attached following the steps below.

The following procedure assumes that the unit has already been mounted in position.

1. Orientate the bottom-right side of the bezel under the bottom-right side of the unit, ensuring that the clips along the bottom edge of the bezel latch into position.

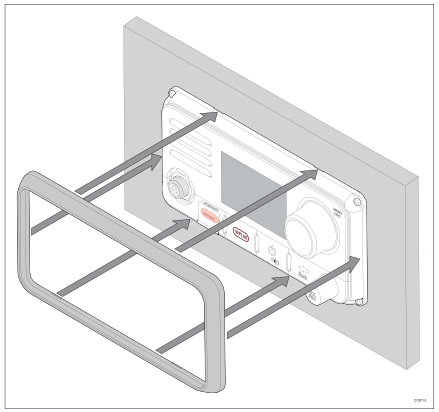

2. Ensure the bezel is correctly aligned with the unit, as shown.
3. Apply firm but even pressure to the bezel along the:
   i. Outer edges - work from the sides upwards and then along the top edge, to ensure that it clips securely into position.
   ii. Inner edges - ensure that the bezel sits flat.
4. Check that all control buttons are free to operate.

Fistmic mounting

The Fistmic can be mounted by following the steps below. Whilst only the Fistmic is pictured, you can also mount the Handset using the same Hook plate (mounting clip).

Before mounting the unit, ensure that you have:

- Selected a suitable location, ensuring there is nothing behind the mounting surface that may be damaged when drilling.
- Identified the cable connections and route that the cables will take.

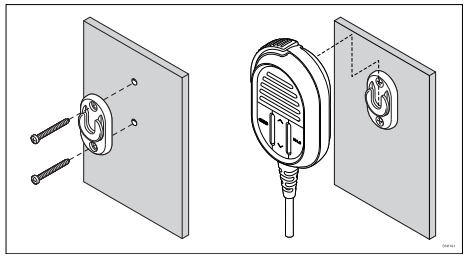

1. Check the selected location for the Hook plate, a clear flat area is required, with sufficient space around it to place and remove the Fistmic / Handset and coiled cable.
2. Using a pencil, offer up the Hook plate to the desired location and mark the location of the screw holes on the mounting surface.
3. Drill the mounting holes using a suitable size drill bit.
4. Hold the Hook plate in place and secure using the screws provided.
5. Hook the Fistmic / Handset over the Hook plate and gently push down until it clicks into position.

Important:

- The Fistmic can only be hooked and unhooked from the Hook plate when held vertically.
- Drill bit, tap size and tightening torque is dependent on the thickness and type of material the unit is to be mounted on.

81381-3-en-US_A5_PRINT.pdf 32 5/4/2020 3:26:31 PM

Wired handset mounting using the holster

Follow the steps below to mount the wired handset.

Before mounting, ensure that your selected location meets the location requirements found in this document.

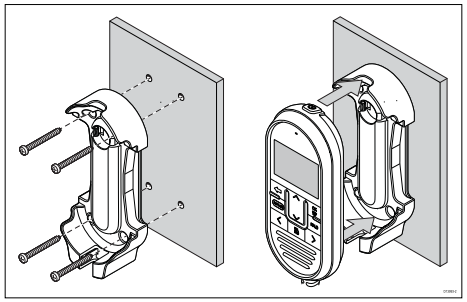

1. Check the selected location for the mounting holster, a clear flat area is required, with sufficient space around it to place and remove the handset.
2. Using a pencil, offer up the holster to the desired location and mark the location of the screw holes on the mounting surface.
3. Drill the mounting holes using a suitable size drill bit.
4. Hold the holster in place and secure using the screws provided.
5. Place the handset into the holster until it clicks into position.

Wired and wireless speaker mounting

Before mounting, ensure that your selected location meets the location requirements found in this document.

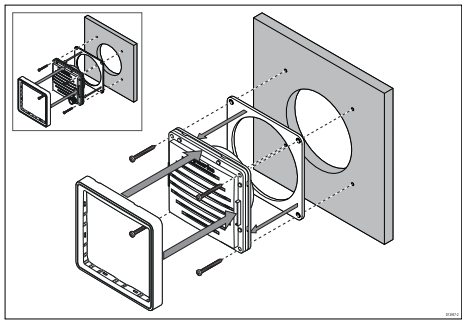

1. Remove the speaker's bezel.
2. Using the supplied mounting template, mark the location of the cut out and fixing holes on the mounting surface.
3. Using a 89 mm (3 ½ in) hole saw, drill out the centre cut out area indicated on the mounting template.
4. Drill holes for the fixings, using a drill with a suitable sized bit.
5. Ensure that the unit fits into the removed area and then file around the cut edge until smooth.
6. Peel the backing off of the supplied gasket and place the adhesive side of the gasket onto the rear of the speaker, pressing firmly onto the flange.
7. Connect the relevant cable to the speaker.
8. Slide the speaker into place and secure using the fixings provided.
9. Fit the Bezel, ensuring it clips into place on all 4 sides.

Pass-through panel kit mounting

When installing handsets, the pass-through panel kit should be used to secure the cable's connector to the panel the cable has to pass through.

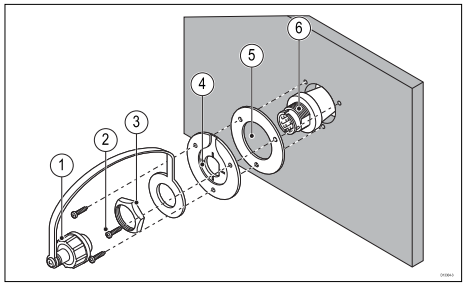

1	Splash-proof dust cap with lanyard
2	Mounting plate fixings x 3
3	Mounting plate nut
4	Mounting plate
5	Mounting plate gasket
6	Extension cable

1. Check the selected location for the Mounting plate, a clear flat area is required.
2. Ensuring correct orientation of the mounting plate, offer up the plate to the desired location and mark

81381-3-en-US_A5_PRINT.pdf 33 5/4/2020 3:26:31 PM

the location of the screw holes and the center hole on the mounting panel.

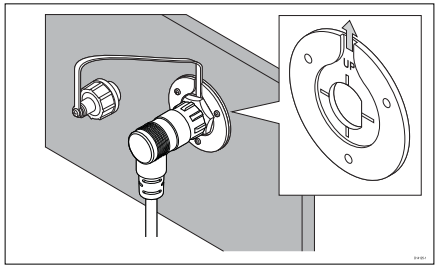

To ensure that the handset's connector points down when connected, orientate the mounting plate so that the lanyard grove is pointing straight up.

3. Drill the mounting holes using a suitable size drill bit.
4. Drill the center hole using a 25 mm (1 in.) hole cutting saw.
5. Pull the connector end of the cable through the hole in the mounting surface.
6. Place the Mounting plate gasket over the end of the connector.
7. With the recessed side facing away from the mounting panel, place the Mounting plate over the end of the connector.
8. Place the lanyard end of the Splash-proof dust cap over the connector, ensuring the lanyard sits in the recess in the Mounting plate.
9. Place the Mounting plate nut over the connector and tighten clockwise using a 13/16 in. (21 mm) socket wrench, being careful not to damage the plastic nut by overtightening.
10. Secure the Mounting plate to the mounting surface using the supplied screws.
11. Attach the Handset / Fistmic connector to the cable connector and rotate the locking collar clockwise to secure.
12. Connect the opposite end of the cable to the required connector either on the Base station or to another pass-through panel mounting plate connector.

Note:

Drill bit, tap size and tightening torque is dependent on the thickness and type of material the unit is to be mounted on.

Mounting the wireless hub

Before mounting, ensure that:

- your selected location meets the location requirements found in this document.
- you pay particular attention to the wireless location requirements.
- sufficient space is available above or to one side of the hub for the antenna.
- the product operates correctly at the desired location before mounting.

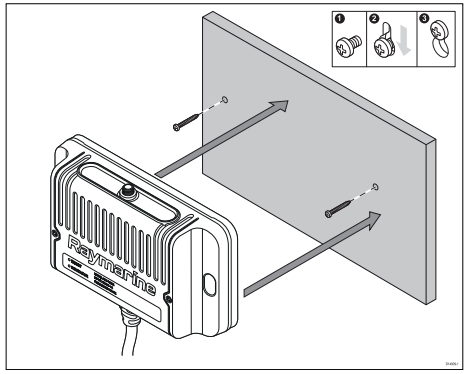

1. Using the supplied mounting template, mark the location of the fixing holes on the mounting surface.
2. Drill holes for the mounting fixings using a drill with a suitable sized drill bit.
3. Screw the fixings approximately half way into the holes in the mounting surface.
4. Place the Wireless hub over the fixing screws and push down to lock into positions
5. Fully tighten the screws.
6. Connect the antenna to the top of the hub.

Antenna orientation

Radio waves are emitted from the wireless hub perpendicular to the orientation of the hub's antenna.

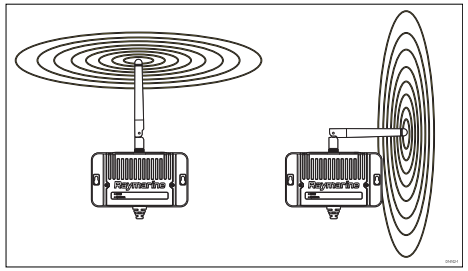

Keeping the antenna vertical should provide the best coverage for devices on the same plane as your hub. Positioning the antenna horizontally will provide better coverage above and below the hub.

Installing the wireless hub antenna extension accessory

An extension cable accessory (A80541) is available for the wireless hub's antenna. Using the extension the distance of the wireless hub's antenna can be extended a farther 5 m (16.4 ft).

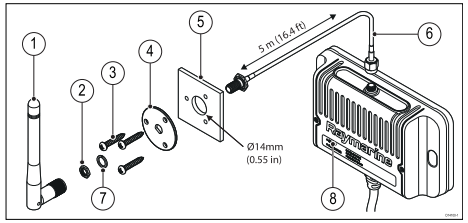

1	Antenna (supplied with the hub)	2	Nut
3	M3x10 fixing screws x 3	4	Mounting plate
5	Mounting surface (14 mm (0.55 in) diameter hole required)	6	5 m (16.4 ft) antenna extension cable
7	Split washer	8	Wireless hub

1. Check the selected location for the Mounting plate, a clear flat area is required.
2. Using a pencil, offer up the Mounting plate to the desired location and mark the location of the screw holes and the center hole on the mounting panel.
3. Drill holes for the mounting fixings using a drill with a suitable sized drill bit.
4. Drill the center hole using a 14 mm (0.55 in) drill/hole cutter.
5. Pull the connector end with the exposed thread through the center hole.
6. Place the mounting plate over the end of the connector.
7. Place the split washer and nut over the end of the connector and secure by hand tightening the nut.
8. Secure the mounting plate to the mounting surface using the supplied screws.
9. Screw the antenna supplied with your hub to the connector.
10. Connect the opposite end of the extension cable to the antenna connector located on the top of the wireless hub.

Mounting the charging holster for the wireless handset

Before mounting, ensure that:

- Your selected location meets the location requirements found in this document.
- You pay particular attention to the wireless location requirements.
- The product operates correctly at the desired location before mounting.
- The product does not interfere with nearby devices.

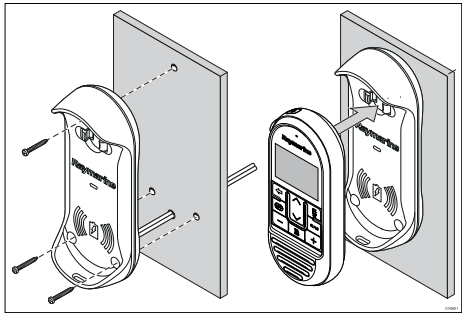

1. Using the supplied mounting template mark the location of the mounting holes and if required, the cable hole.
2. Drill the mounting holes using a suitable size drill bit.
3. If required, use a 6.5 mm (0.26 in) drill bit to drill a hole for the holster's power cable.
4. Hold the holster in place and secure using the screws provided.
5. Place the Handset into the holster, ensuring it clicks into position.

81381-3-en-US_A5_PRINT.pdf 35 5/4/2020 3:26:31 PM

Chapter 4: Cables and connections

Chapter contents

- 4.1 General cabling guidance on page 38
- 4.2 Connections overview — Ray53 on page 38
- 4.3 Connections overview — Ray63 / Ray73 on page 39
- 4.4 Power connection on page 39
- 4.5 Fistmic connection (Ray63 / Ray73 only) on page 42
- 4.6 Secondary handset station (Ray63 / Ray73 only) on page 42
- 4.7 SeaTalkng ® / NMEA 2000 connection on page 42
- 4.8 NMEA 0183 connection on page 43
- 4.9 Connecting a VHF antenna on page 43
- 4.10 GNSS (GPS) antenna connection on page 44
- 4.11 Passive speaker connection on page 44
- 4.12 Wireless hub connection on page 44
- 4.13 Wireless handset charging holster – power connection on page 44
- 4.14 Wireless handset connections on page 44
- 4.15 Wireless speaker – power connection on page 45
- 4.16 Loud hailer connection (Ray73 only) on page 45

81381-3-en-US_A5_PRINT.pdf 37 5/4/2020 3:26:31 PM

4.1 General cabling guidance

Cable types and length

It is important to use cables of the appropriate type and length.

- Unless otherwise stated only use cables supplied by Raymarine.
- Where it is necessary to use non-Raymarine cables, ensure that they are of correct quality and gauge for their intended purpose. (e.g.: longer power cable runs may require larger wire gauges to minimize voltage drop along the run).

Cable routing

Cables must be routed correctly, to maximize performance and prolong cable life.

- Do NOT bend cables excessively. Wherever possible, ensure a minimum bend diameter (Ø) of 200 mm (7.87 in) / minimum bend radius (R) of 100 mm (3.94 in).

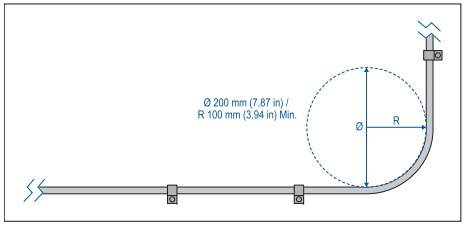

- Protect all cables from physical damage and exposure to heat. Use trunking or conduit where possible. Do NOT run cables through bilges or doorways, or close to moving or hot objects.
- Secure cables in place using cable clips or cable ties. Coil any excess cable and tie it out of the way.
- Where a cable passes through an exposed bulkhead or deckhead, use a suitable watertight feed-through.
- Do NOT run cables near to engines or fluorescent lights.
- Always route data cables as far away as possible from:
  - other equipment and cables,
  - high current carrying AC and DC power lines,
  - antennas.

Strain relief

Use adequate strain relief for cabling to ensure that connectors are protected from strain and will not pull out under extreme sea conditions.

Circuit isolation

Appropriate circuit isolation is required for installations using both AC and DC current:

- Always use isolating transformers or a separate power-inverter to run PC's, processors, displays and other sensitive electronic instruments or devices.
- Always use an isolating transformer with Weather FAX audio cables.
- Always use an isolated power supply when using a 3rd party audio amplifier.
- Always use an RS232/NMEA converter with optical isolation on the signal lines.
- Always make sure that PC's or other sensitive electronic devices have a dedicated power circuit.

Cable shielding

Ensure that cable shielding is not damaged during installation and that all cables are properly shielded.

Connections to other equipment

Requirement for ferrites on non-Raymarine cables

If your Raymarine equipment is to be connected to other equipment using a cable not supplied by Raymarine, a suppression ferrite MUST always be attached to the cable near the Raymarine unit.

Dust caps

To prevent potential water ingress, connectors not in use should be protected using the supplied dust caps.

Bare end wire connections

Your product is supplied with bare end wire connections. You must ensure that ALL bare end wires are adequately protected from short circuit and water ingress.

Bare ended wire connections

It is recommended that bare ended wire connections are made by soldering or using crimp connectors and then protected by wrapping the connection in insulation tape.

Unused bare ended wires

Any unused bare ended wires should be folded back and wrapped in insulation tape.

4.2 Connections overview — Ray53

The following connections are available on the Ray53.

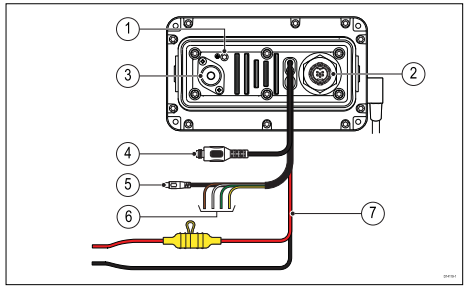

1. Grounding point — DO NOT USE!
2. SeaTalkng ® connection.
3. SO239 VHF antenna connection.
4. TNC external GNSS (GPS) antenna connection.
5. RCA Audio connection.
6. NMEA 0183 connection.
7. Power supply connection.

81381-3-en-US_A5_PRINT.pdf 38
5/4/2020 3:26:31 PM

4.3 Connections overview — Ray63 / Ray73

The following connections are available on the Ray63 and Ray73.

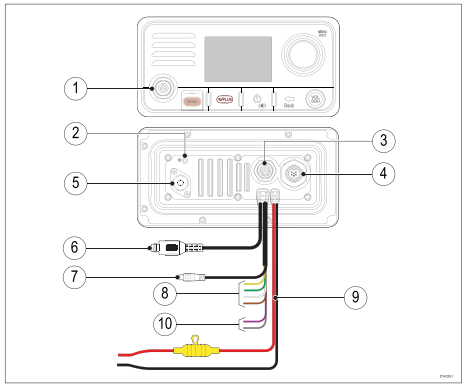

1. Primary station (8 pin) connection.
2. Grounding point — DO NOT USE!
3. Second station (12 pin) connection.
4. SeaTalkng ® connection.
5. S0239 VHF antenna connection.
6. TNC GNSS (GPS) connection.
7. RCA Audio connection.
8. NMEA 0183 connection.
9. Power supply connection.
10. Loud hailer connection (Ray73 only).

Primary and secondary station connectors

The connectors below are used to connect the supplied Fistmic and / or the optional Wired (Raymic) handset to the Base station.

Connector	Description	Connects to
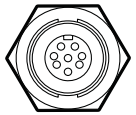	Primary station connector (8 pin front Fistmic connector)	• Fistmic (supplied)
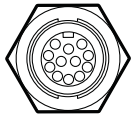	Secondary station connector (12 pin rear handset connector)	• Wireless hub via adaptor (R70739) • Wired handset • Wired handset via Handset extension cables (A80291, A80292, A80290). • Fistmic via Fistmic adaptor cable (A80296) • Wired handset via Handset adaptor cable (A80297)

4.4 Power connection

The power supply should be connected as shown below:

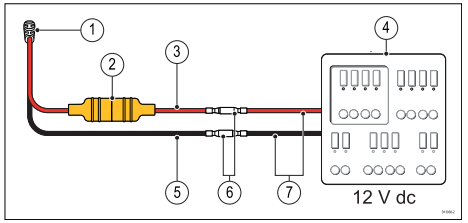

1. Radio's fitted power cable.
2. In-line fuse.
3. Power supply positive (+) Red wire
4. 12 V dc power source (i.e.: Distribution panel).
5. Power supply negative (-) Black wire.
6. Suitable waterproof connection (Radio is supplied with bullet crimps on power supply wires.)
7. If, required you can extend the power cable supplied with your radio, using suitably rated cabling.

Warning: 12 Volt dc only

This product must only be connected to a **12 volt dc** power source.

Warning: Positive ground systems

Do not connect this unit to a system which has positive grounding.

81381-3-en-US_A5_PRINT.pdf 39 5/4/2020 3:26:31 PM

In-line fuse and thermal breaker ratings

The following in-line fuse and thermal breaker ratings apply to your product:

In-line fuse rating	Thermal breaker rating
10 A	7 A (if only connecting one device)

Note:

- The suitable fuse rating for the thermal breaker is dependent on the number of devices you are connecting. If in doubt consult an authorized **Raymarine**® dealer.
- Your product's power cable may have a fitted in-line fuse. If not, add an in-line fuse to the positive wire of your product's power connection.

Grounding

This product is grounded through the 0 V dc negative wire on the power cable and does not require a drain (shield) to be connected to the base station's ground terminal.

Warning: Chassis grounding

Do NOT ground this product using the chassis ground terminal.

Grounding this product to a vessel's RF ground may cause galvanic corrosion.

Power distribution

Recommendations and best practice.

- The product is supplied with a power cable, either as a separate item or a captive cable permanently attached to the product. Only use the power cable supplied with the product. Do NOT use a power cable designed for, or supplied with, a different product.
- Refer to the *Power connection* section for more information on how to identify the wires in your product's power cable, and where to connect them.
- See below for more information on implementation for some common power distribution scenarios:

Important:

- When planning and wiring, take into consideration other products in your system, some of which (e.g. sonar modules) may place large power demand peaks on the vessel's electrical system, which may impact the voltage available to other products during the peaks.
- The information provided below is for guidance only, to help protect your product. It covers common vessel power arrangements, but does NOT cover every scenario. If you are unsure how to provide the correct level of protection, please consult an authorized dealer or a suitably qualified professional marine electrician.

Implementation — connection to distribution panel (Recommended)

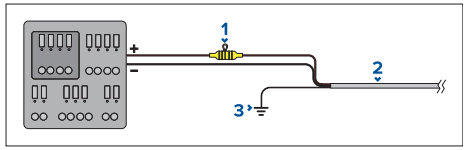

1	Waterproof fuse holder containing a suitably-rated inline fuse must be fitted. For suitable fuse rating, refer to: *In-line fuse and thermal breaker ratings*.
2	Product power cable.
3	Drain wire connection point.

- It is recommended that the supplied power cable is connected to a suitable breaker or switch on the vessel's distribution panel or factory-fitted power distribution point.
- The distribution point should be fed from the vessel's primary power source by 8 AWG (8.36 mm²) cable.
- Ideally, all equipment should be wired to individual suitably-rated thermal breakers or fuses, with appropriate circuit protection. Where this is not possible and more than 1 item of equipment shares a breaker, use individual in-line fuses for each power circuit to provide the necessary protection.

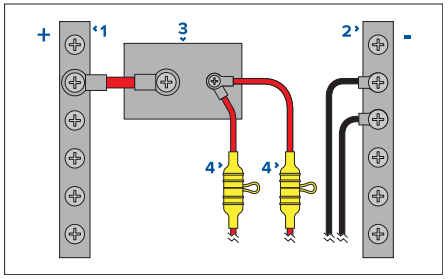

1	Positive (+) bar
2	Negative (-) bar
3	Circuit breaker
4	Waterproof fuse holder containing a suitably-rated inline fuse must be fitted. For suitable fuse rating, refer to: *In-line fuse and thermal breaker ratings*.

Important:

Observe the recommended fuse / breaker ratings provided in the product's documentation, however be aware that the suitable fuse / breaker rating is dependent on the number of devices being connected.

Implementation — direct connection to battery

- Where connection to a power distribution panel is not possible , the power cable supplied with your product may be connected directly to the vessel's battery, via a suitably rated fuse or breaker.

81381-3-en-US_A5_PRINT.pdf 40

5/4/2020 3:26:31 PM

- The power cable supplied with your product may NOT include a separate drain wire. If this is the case, only the power cable's red and black wires need to be connected.
- If the power cable is NOT supplied with a fitted inline fuse, you MUST fit a suitably rated fuse or breaker between the red wire and the battery's positive terminal.
- Refer to the inline fuse ratings provided in the product's documentation.
- If you need to extend the length of the power cable supplied with your product, ensure you observe the dedicated *Power cable extensions* advice provided in the product's documentation.

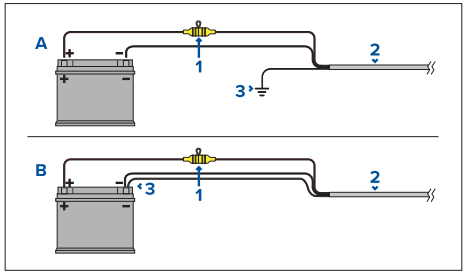

1	Waterproof fuse holder containing a suitably-rated inline fuse must be fitted. For suitable fuse rating, refer to: *In-line fuse and thermal breaker ratings*.
2	Product power cable.
3	Drain wire connection point.

Battery connection scenario A:

Suitable for a vessel with a common RF ground point. In this scenario, if your product's power cable is supplied with a separate drain wire then it should be connected to the vessel's common ground point.

Battery connection scenario B:

Suitable for a vessel without a common grounding point. In this case, if your product's power cable is supplied with a separate drain wire then it should be connected directly to the battery's negative terminal.

Power cable extension

If you need to extend the length of the power cable supplied with your product, ensure you observe the following advice:

- The power cable for each unit in your system should be run as a separate, single length of 2-wire cable from the unit to the vessel's battery or distribution panel.
- Ensure that the extension cable is of a sufficient gauge for the supply voltage and the total load of the device and the length of the cable run. Refer to the following table for typical **minimum** power cable wire gauges.

Cable length in meters (feet)	Wire gauge in AWG (mm^2) for 12 V supply	Wire gauge in AWG (mm^2) for 24 V supply
<8 (<25)	16 (1.31 mm^2)	18 (0.82 mm^2)
16 (50)	14 (2.08 mm^2)	18 (0.82 mm^2)
24 (75)	12 (3.31 mm^2)	16 (1.31 mm^2)
>32 (>100)	10 (5.26 mm^2)	16 (1.31 mm^2)

Important:

Be aware that some products in your system (such as sonar modules) can create voltage peaks at certain times, which may impact the voltage available to other products during the peaks.

Important: To ensure power cables (including any extension) are of a sufficient gauge, ensure that there is a continuous **minimum** voltage of **10.8 V dc** at the end of the cable where it enters the product's power connector, even with a fully flat battery at 11 V dc. (Do not assume that a flat battery is at 0 V dc. Due to the discharge profile and internal chemistry of batteries, the current drops much faster than the voltage. A "fully flat" battery still shows a positive voltage, even if it doesn't have enough current to power your device.)

Grounding

Ensure that you observe any additional grounding advice provided in the product's documentation.

More information

It is recommended that best practice is observed in all vessel electrical installations, as detailed in the following standards:

- BMEA Code of Practice for Electrical and Electronic Installations in Boats
- NMEA 0400 Installation Standard
- ABYC E-11 AC & DC Electrical Systems on Boats
- ABYC A-31 Battery chargers and Inverters
- ABYC TE-4 Lightning Protection

81381-3-en-US_A5_PRINT.pdf 41 5/4/2020 3:26:31 PM

4.5 Fistmic connection (Ray63 / Ray73 only)

Front connection

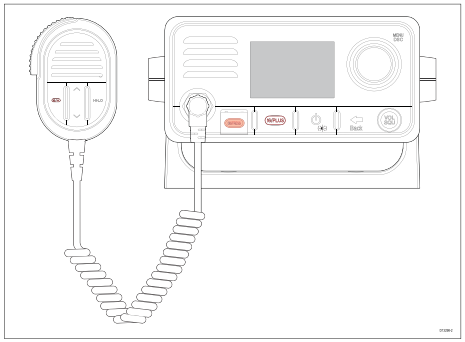

The Fistmic can be connected directly to the front connector on your Radio.

Rear connection

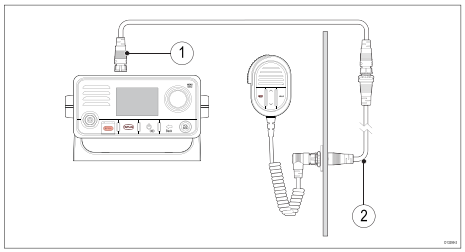

1. Handset extension cable (A80291)
2. Fistmic adaptor cable (A80296)

The Fistmic can also be connected to the Rear station connection using the appropriate adaptor cables.

The Fistmic must NOT be used to create a second station, as the operator will not have access to all Radio functions or the information displayed on the Radio's LCD screen.

4.6 Secondary handset station (Ray63 / Ray73 only)

The Raymic handset accessory can be connected to the Secondary station connector located on the rear of the radio, this will create a second fully functional station.

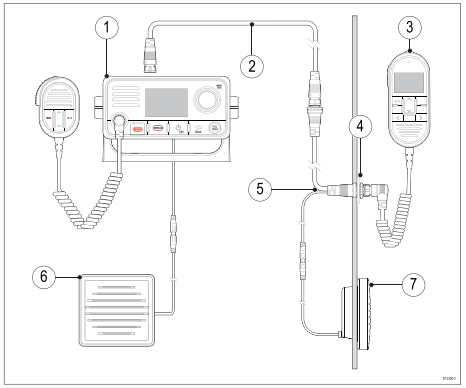

1. Primary station (Radio base station)
2. Handset extension cable (A80290, A80291 or A80292)
3. Secondary station handset (A80289)
4. Panel mount fixings kit (R70438)
5. Handset adaptor cable with RCA audio (A80297)
6. Primary station passive speaker (A80542)
7. Secondary station passive speaker (A80542)

The Fistmic must NOT be used to create a second station, as the operator will not have access to all Radio functions or the information displayed on the Radio's LCD screen.

Wired handset extension cables

Handset station cabling can be extended using approved extension cables.

The maximum length of cable from the Handset to the Base station should not exceed 50 m (164 ft)

Connecting handsets and cables

Follow the steps below to connect handsets and extension cables together.

1. If fitted, unscrew and remove the dust cap from the relevant connector.
2. Ensure the cable connectors are correctly orientated, before insertion.
3. Ensure connectors are fully inserted, before locking..
4. Tighten locking collars by Rotating clockwise.

4.7 SeaTalkng ® / NMEA 2000 connection

Your product can transmit and receive data to and from devices connected on SeaTalkng ® or NMEA 2000 CAN bus networks. Connection is established using the SeaTalkng ® connector located on the rear of the unit.

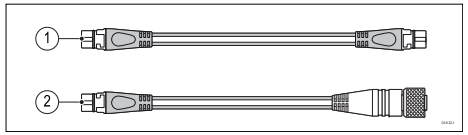

1. Use the supplied SeaTalkng ® spur cable to connect your product to your SeaTalkng ® network.
2. You can also use a DeviceNet to SeaTalkng ® adaptor cable (not supplied) to connect your product to an available spur on a NMEA 2000 network.

81381-3-en-US_A5_PRINT.pdf 42 5/4/2020 3:26:31 PM

Note:

1. The product must be connected to a correctly terminated backbone.
2. You cannot connect your product directly to a MFD.
3. Refer to the instructions supplied with your SeaTalkng ® / NMEA 2000 device for details on creating a backbone.

Connecting SeaTalkng ® cables

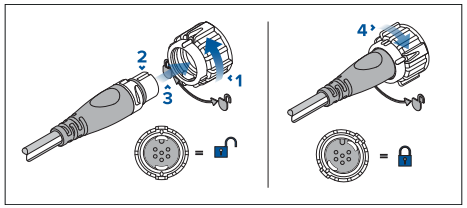

1. Rotate your product's SeaTalkng ® connector locking collar counter clockwise, so that the connector is in the unlocked position.
2. Ensure the cable's connector is correctly oriented (groove pointing up).
3. Fully insert the cable connector..
4. Rotate the locking collar clockwise (2 clicks) until it is in the locked position.

4.8 NMEA 0183 connection

The NMEA 0183 wires can be used to connect the unit to a NMEA 0183 GNSS (GPS) receiver or MFD.

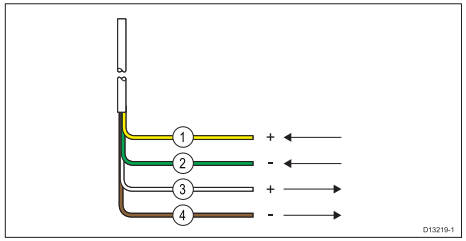

1. Yellow = Receive positive (+) wire
2. Green = Receive negative (-) wire
3. White = Transmit positive (+) wire
4. Brown = Transmit negative (-) wire

The NMEA wires should be connected to a compatible device as shown in the table below:

NMEA 0183 wires		NMEA 0183 device
Receive positive (+)	to	Transmit positive (+)
Receive negative (-)	to	Transmit negative (-)
Transmit positive (+)	to	Receive positive (+)
Transmit negative (-)	to	Receive negative (-)

4.9 Connecting a VHF antenna

The radio must be connected to a suitable VHF antenna (not supplied). The antenna connection must be protected so it cannot come into contact with any bare metal (which may be grounded). A protective boot is supplied that can be used to ensure isolation of the antenna connection.

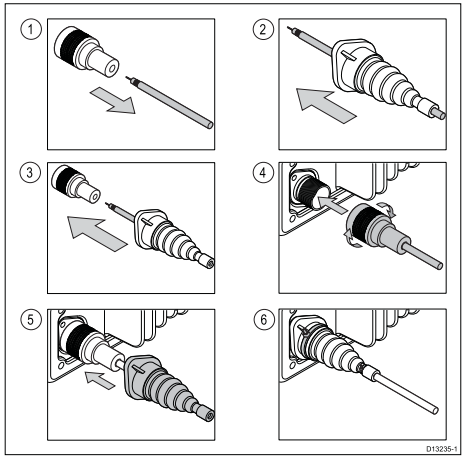

1. Disconnect your antenna cable from the connector.
2. Push the antenna cable through the supplied protective boot.
3. Re-connect the antenna cable to the connector.
4. Plug the antenna connector into the product's antenna connection and secure by tightening the locking collar.
5. Push the protective boot over the connection.
6. Secure the protective boot using the supplied cable ties.

If the antenna connector cannot be removed then another suitable means of protection must be used, such as insulation tape.

81381-3-en-US_A5_PRINT.pdf 43 5/4/2020 3:26:32 PM

4.10 GNSS (GPS) antenna connection

You can improve the performance of your radio's built-in GNSS (GPS) receiver using an external antenna.

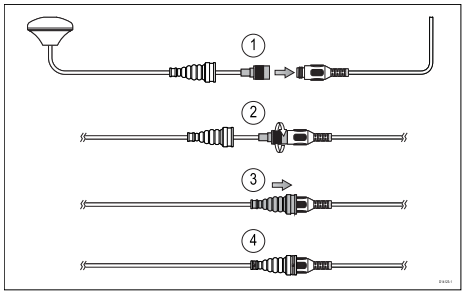

Follow the steps below to connect the external antenna:

1. Remove the dust cap from the external antenna connector on your radio. Ensuring correct connector orientation, fully insert the external antenna connector into the GA150's connector.
2. Tighten the antenna connector's locking collar by rotating the GA150's connector clockwise until tight.
3. Push the protective boot into position over both connectors.
4. Secure the protective boot using a cable tie on each end.

4.11 Passive speaker connection

A passive speaker (A80542) can be connected using the RCA lead on the radio or on the handset adaptor cable.

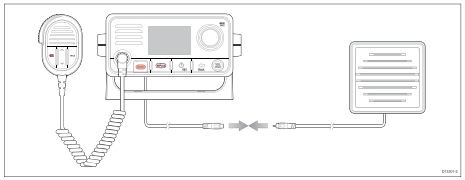

4.12 Wireless hub connection

The Wireless hub connects to the second station connector on the rear of the Ray63 / Ray73 radios using the Wireless hub adaptor. The Wireless hub allows connection of wireless handset stations.

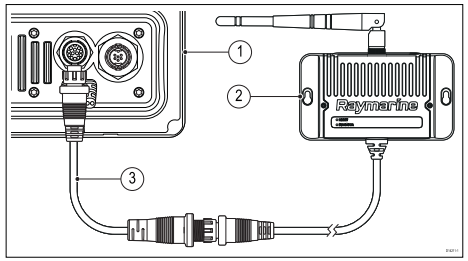

1. Ray63 / Ray73 VHF radio.
2. Wireless hub A80540.
3. Wireless hub adaptor (R70739).

4.13 Wireless handset charging holster – power connection

To enable inductive charging of the wireless handset, the holster requires a 12 V dc power supply. The power cables should be connected via a distribution panel or, if required directly to a battery.

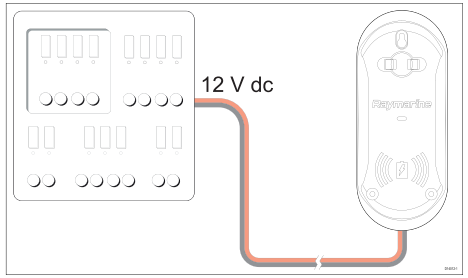

Refer to the Power distribution section for guidance on connecting to a power supply.

In-line fuse and thermal breaker ratings

The wireless speaker is internally fused, however it is recommended that you fit an inline fuse on the positive wire of your product's power cable or connect using a thermal breaker.

In-line fuse rating	Thermal breaker rating
2 A	2 A (refer to note below)

Note:

- The suitable fuse rating for the thermal breaker is dependent on the number of devices you are connecting. If in doubt consult an authorized Raymarine® dealer.

4.14 Wireless handset connections

The Wireless handset connects wirelessly to the Wireless hub, and the Wireless speaker connects wirelessly to the Wireless handset.

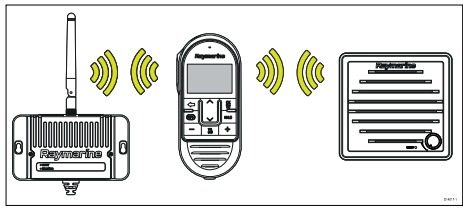

Up to 2 Wireless handsets can be connected to the Wireless hub. Refer to 6.2 **Connecting a wireless handset to the hub**
for the connection procedure.

81381-3-en-US_A5_PRINT.pdf 44
5/4/2020 3:26:32 PM

One Wireless speaker can be connected to each Wireless handset. Refer to 6.3 **Connecting the wireless speaker to the Wireless handset** for the connection procedure.

4.15 Wireless speaker – power connection

The wireless speaker is an active speaker that requires a 12 V dc power supply. The power cables should be connected via a distribution panel or, if required directly to a battery.

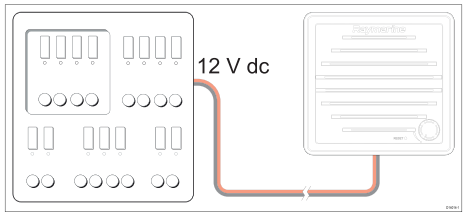

Refer to the Power distribution section for guidance on connecting to a power supply.

In-line fuse and thermal breaker ratings

The wireless speaker is internally fused, however it is recommended that you fit an inline fuse on the positive wire of your product's power cable or connect using a thermal breaker.

In-line fuse rating	Thermal breaker rating
2 A	2 A (refer to note below)

Note:

- The suitable fuse rating for the thermal breaker is dependent on the number of devices you are connecting. If in doubt consult an authorized Raymarine® dealer.

4.16 Loud hailer connection (Ray73 only)

A Loud hailer (M95435) can be connected to the radio using the loud hailer wires.

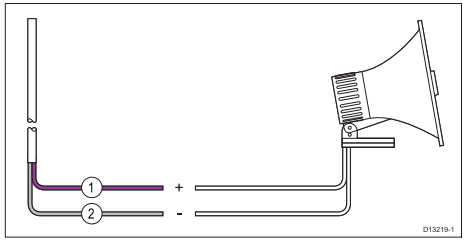

1	Positive (+) hailer wire (Purple)
2	Negative (-) hailer wire (Gray)

81381-3-en-US_A5_PRINT.pdf 45 5/4/2020 3:26:32 PM

Chapter 5: Getting started

Chapter contents

- 5.1 Controls and interface on page 48
- 5.2 Handset controls on page 48
- 5.3 Powering the unit on on page 49
- 5.4 Powering the unit off on page 49
- 5.5 Homescreen overview on page 49
- 5.6 Shortcut list on page 51
- 5.7 Shared Brightness on page 52
- 5.8 Initial startup on page 52
- 5.9 Accessing the menu on page 53
- 5.10 Selecting a language on page 53
- 5.11 Switching on the AIS receiver on page 53
- 5.12 Selecting a network type on page 53
- 5.13 Entering your MMSI number on page 53
- 5.14 Entering your ATIS ID on page 54
- 5.15 Changing the radio region on page 55
- 5.16 Switching between high and low transmit power on page 55
- 5.17 GNSS (GPS) set up on page 55
- 5.18 Station priority (Ray63 and Ray73 only) on page 56

5.1 Controls and interface

The controls and interface available are as follows:

Base station

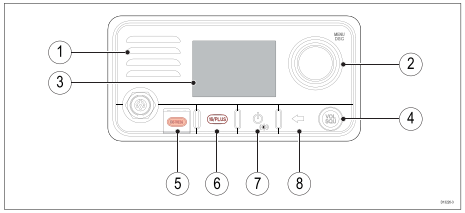

1. **Built-in speaker**
2. **Rotary knob** with center **OK** push button — Press knob in to access menu and DSC functions and to confirm selections. Turn rotary clockwise or anti-clockwise to move up and down through menu items or to change channel from the Homescreen.
3. **LCD**
4. **VOL/SQ** — Turn knob to adjust volume or squelch up and down. Press center button to switch between volume and squelch control.
5. **DISTRESS** — Push up the spring loaded cover and press this button to make a DSC distress call.
6. **16 / +** — When powered on press to switch between priority channels.
7. **Power** — Press to power the unit on. Press and hold for 3 seconds to power the unit off. Momentary press to access the shortcut list.
8. **Back** — Move back through menu options.

Fistmic

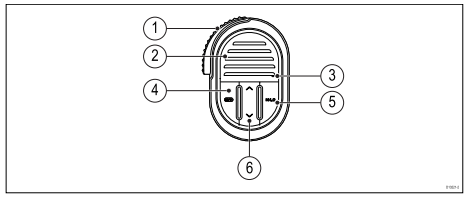

1. **PTT (Push to Talk)** — Press and hold to send a voice message. Release to return to receive mode.

> **Note:** The maximum transmit time is limited to 5 minutes to prevent un-intentional transmissions from occupying the VHF channel.

2. **Speaker**
3. **Microphone location**
4. **16 / +** — When powered on press to switch between priority channels.
5. **HI/LO** — Press to switch between High (25 W) and low (1 W) transmit power.
6. **Channel Up / Channel Down** — Changes the channel up or down.

5.2 Handset controls

Overview of wireless handset controls.

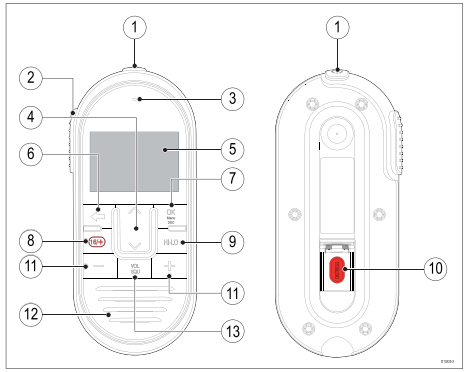

1. **Power** — Press to power the handset on. Press and hold for 3 seconds to power the handset off. Momentary press to access the shortcut list.
2. **PTT** (Push to Talk) — Press and hold to send a voice message. Release to return to receive mode.

> **Note:** The maximum transmit time is limited to 5 minutes to prevent unintentional transmissions from occupying the VHF channel.

3. **Microphone location**
4. **Channel Up** and **Channel Down** — Changes to the next or previous VHF channel, also used to select or adjust options in the menu.
5. **LCD display**
6. **Back** — Go to the previous menu / screen. Press and hold to return to the Homescreen.
7. **OK / menu button** — Press button to access menu / DSC functions and to confirm selections.
8. **16 / +** — When powered on press to switch between priority channels.

81381-3-en-US_A5_PRINT.pdf 48

5/4/2020 3:26:32 PM

9. **HI/LO** — Press to switch between High (25 W) and Low (1 W) transmit power.
10. **DISTRESS** — Lift up the spring-loaded cover and press this button to make a DSC distress call.
11. **Volume Up** and **Volume Down** — Press to adjust volume or squelch intensity up or down.
12. **Built-in speaker**
13. **VOL/SQ** — Press button to switch between volume and squelch controls.

5.3 Powering the unit on

With the radio connected to a power supply the power button is used to switch the radio on and off.

1. Press the **Power** button to power-up the radio.

   The startup is displayed.

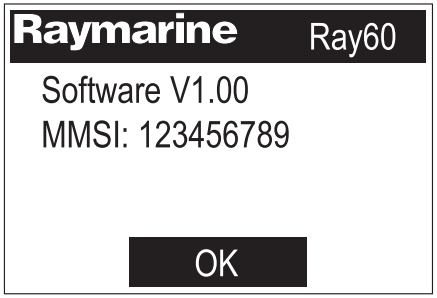

   The startup screen will automatically time-out after 5 seconds.

2. Press the **OK** button, or wait for the startup screen to time-out.

   The Homescreen is displayed.

Powering the handset

To power the Handset on and off follow the steps below.

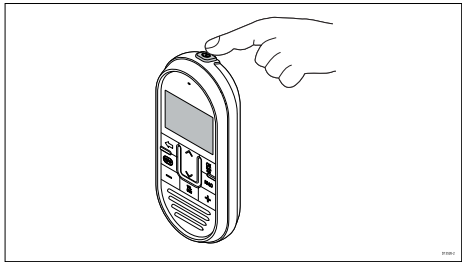

With the Base station powered On:

1. Press and hold the **Power** button, located on the top of the Handset, for 2 seconds.

   The Handset will power on.
2. To power off the Handset, press and hold the **Power** button for approximately 3 seconds, until the screen turns off.

5.4 Powering the unit off

With the unit powered on:

1. Press and hold the **Power** button for approximately 3 seconds to power the unit off.

5.5 Homescreen overview

The information below describes the on-screen characters and symbols which are shown on the Homescreen..

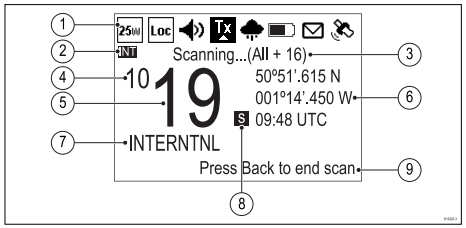

1. **Status bar** — The status bar displays symbols which indicate the current status of the unit.
2. **Frequency band** — Indicates which channel frequency band is in use:
   - USA — United States of America
   - INT — International
   - CAN — Canada
   - WX — Weather

Note: Special licensing is required to receive USA and Canadian channel sets.

3. **Status text** — Indicates the current radio mode e.g.: ATIS Mode active, Weather Alert, Scan mode etc.
4. **New 4 digit channels** — Identifies the first 2 digits when the radio is set to one of the new 4 digit simplex channels.
5. **Channel** — Indicates the current channel number, or the last 2 digits when set to a 4 digit channel..
6. **Location / Time** or **Location / COG/SOG** — Depending on selection displays Location coordinates and current time or Location coordinates and current COG and SOG.
7. **Channel Name** — Indicates the name of the current channel.
8. **Channel type** — Indicates the type of channel:

81381-3-en-US_A5_PRINT.pdf 49
5/4/2020 3:26:32 PM

- **s** = Simplex — Simplex channels transmit and receive on the same frequency.
- **d** = Duplex — Duplex channels use separate frequencies to transmit and receive.

9. **Optional text** — Provides extra user guidance.

Status bar symbols

The status bar is used to display symbols that indicate the radio's status.

Symbol	Name	Description
1W	Low power	Indicates the radio transmitters is in low power (1 watt) or high power (25 watt) mode
25W	High power	
Loc	Local	Indicates the radio is in local reception mode, which decreases receiver sensitivity in high traffic areas to decrease unwanted reception
	Fog horn	Indicates that the radio is in Fog horn mode.
	Transmit	Indicates the radio is currently transmitting (e.g. the PTT button is being pressed.)
	Receive	Indicates the radio is currently receiving a transmission
	Weather	Indicates that the weather alerts mode is activated.
	Power supply voltage too low	Indicates the power supply to the radio is below the specified operating voltage.
	Power supply voltage too high	Indicates the power supply to the radio is above the specified operating voltage.
	DSC	Indicates that a DSC call has been received
	GPS Fix	Indicates if the radio has a GPS/GNSS fix.

Main menu overview

The main menu is accessed by Pressing the **OK** button from the **Homescreen**.

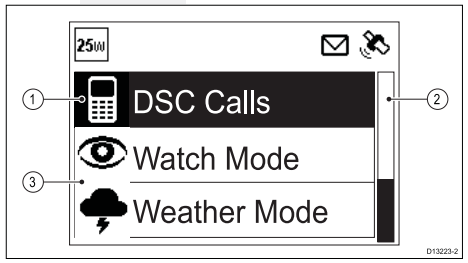

1. Currently selected menu item
2. Scroll bar
3. Menu items

The main menu includes the following items:

Symbol	Name	Sub-options
	* **DSC Calls**	• Individual call • Distress call • Position request • Group call • All ships call • Phonebook • Call logs • Test call • DSC set-up
	* **Watch Mode**	• Dual watch • Triple watch • 2nd priority channel

81381-3-en-US_A5_PRINT.pdf 50
5/4/2020 3:26:32 PM

Symbol	Name	Sub-options
	* **Weather Mode**	• Weather Homescreen
	* **Scan Mode**	• All channels • All channels + 16 • Saved channels • Saved channels + 16 • Edit saved channels
	** **Hail/Fog/Inter-com**	• Hailer • Fog horn • Intercom
	** **Hailer/Fog horn**	• Hailer • Fog horn

Symbol	Name	Sub-options
	** **Intercom**	• Intercom
	Set-up	• Display set-up • Language • Units • Power output • Sensitivity • Noise cancelling (Tx) • ** Wireless set-up • Handset name • Key beep • Channel set-up • Weather alerts • GPS set-up • DSC set-up • AIS • Network output • ATIS set-up • Maintenance

Note:

* Menu items not available when radio has ATIS enabled or if the radio has been pre-programed in MARCOM-C mode.

** Menu only available when compatible accessories are connected.

5.6 Shortcut list

Pressing the **Power** button once while the radio is switched on will open the **Shortcuts list**. The Shortcuts list can be used to adjust the brightness, contrast and access frequently used functions.

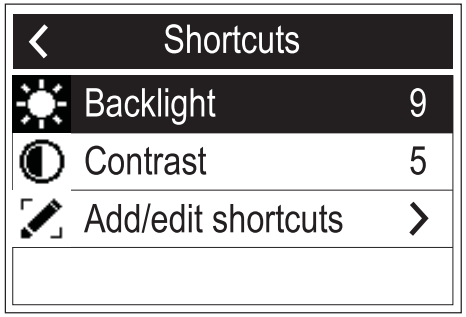

Frequently used functions can be added by selecting **Add/edit shortcuts.**

Adjusting Brightness and Contrast

The LCD Brightness (Backlight) and Contrast can be adjusted using the Shortcuts list.

From any screen:

1. Press the **Power** button.
2. Select **Backlight** or **Contrast**.
3. Adjust the Backlight or Contrast to the desired level using:
   i. **Channel Up** / **Channel Down** buttons on a connected Handset.

81381-3-en-US_A5_PRINT.pdf 51

5/4/2020 3:26:32 PM

ii. **Rotary knob** on the Base station.

4. Press the **Back** button to return to the previous screen.

The Backlight and Contrast settings can also be accessed from the Display set-up menu: **Menu** > **Set-up** > **Display set-up** .

5.7 Shared Brightness

Shared brightness enables simultaneous brightness adjustment of all products that are part of the same group.

The following products are compatible with shared brightness:

- LightHouse™ 3 MFDs using software version 3.4 or greater.
- LightHouse™ or LightHouse™ 2 powered MFDs.
- SeaTalkng ® Instrument displays and Pilot controllers.
- SeaTalkng ® VHF DSC Radios.
- RMK-9 and RMK-10 remote buttonpads.

Any adjustments to the shared brightness level will be applied to all products assigned to the same group.

LightHouse™ / LightHouse™ 2 MFD	Instrument display / Pilot controller
	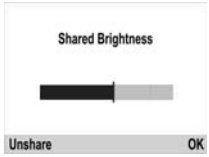
VHF DSC Radio	**LightHouse™ 3 V3.4 or greater**

Multiple brightness groups can be configured. For example, these groups could be used to reflect the physical location of products on your vessel e.g.: helm and flybridge.

Shared brightness requires:

- all products to be compatible with the shared brightness function (see list of compatible products above).
- the **Shared brightness** setting set to On for all products in the brightness group.
- products to be assigned to network groups.
- all the products in each group to be synchronized.

Enabling Shared Brightness

From the **Display Set-up** menu: (**Menu** > **Set-up** > **Display Set-up**).

1. Select **Shared Brightness**.
2. Select **Shared Brightness** again to enable Shared Brightness.

   If Shared Brightness is already enabled then selecting this menu item will disable Shared Brightness.

3. Select **Group**.
4. Select the group that you want to assign the radio to.

Adjusting the Brightness setting will now change the brightness of all products assigned to that group.

5.8 Initial startup

Unless your radio has been pre-programmed; the first time you power-up your radio you will be requested to select certain options. With the exception of your MMSI and ATIS ID, you will also be requested to enter these options after a factory reset.

After acknowledging the startup screen, unless previously set you will be prompted to make the following selections:

1. **Language selection** — See 5.10 Selecting a language for available languages.
2. **Turn on AIS reception (Ray70 and Ray91 only)** — Enables the built-in AIS receiver. This step is only applicable to radios with a built-in AIS receiver. See 5.11 Switching on the AIS receiver for more information.
3. **Select network type** — Selects which connection to transmit AIS and DSC information on, to connected equipment. This step is only applicable if the AIS receiver was turned on in the previous step. See 5.12 Selecting a network type for available options.
4. **Enter MMSI number** — Required to enable DSC functions. This option is not required after a factory reset, or if the radio has been pre-programed in MARCOM-C mode, or has ATIS enabled. See 5.13 Entering an MMSI number for more information. If not already selected you will also be prompted to select your network type.
5. **Enter ATIS ID** — Required when the radio will be used in the inland waterways of Europe. This step is

81381-3-en-US_A5_PRINT.pdf 52 5/4/2020 3:26:32 PM

only applicable if the radio has been pre-programed in MARCOM-C mode. See 5.14 Entering an ATIS ID for more information.

6. **Frequency band selection** — Sets the relevant channels for your region. This step is not applicable if the radio has been pre-programed in MARCOM-C mode. See 5.15 Changing the radio region for more information.

5.9 Accessing the menu

The radio's various options and settings are contained within the menu.

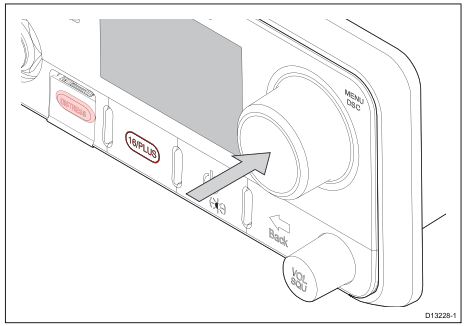

From the Homescreen.

1. Press the **Rotary knob**'s **OK** push button.

5.10 Selecting a language

The language the radio uses can be changed.

From the Main menu:

1. Select **Set-up**.
2. Select **Language**.

The languages available are:

- ***English (default)*** *— English*
- ***Español*** *— Spanish*
- ***Français*** *— French*
- ***Deutsch*** *— German*
- ***Italiano*** *— Italian*

3. Select the language that you want the radio to be set to.

The User interface language is changed to the selected language.

5.11 Switching on the AIS receiver

If your radio includes a built-in AIS receiver then it can be enabled and disabled as follows:

From the Main menu:

1. Select **Set-up**.
2. Select **AIS**.
3. Select **On** to switch the receiver on, or select **Off** to switch the receiver off.

5.12 Selecting a network type

When connecting your radio to other devices it is important to ensure you select the network connection and type that you want data to be transmitted over.

From the Main menu:

1. Select **Set-up**.
2. Select **Network output**.

The following network types are available:

- *NMEA 2000 (default)*
- *0183 High speed*
- *0183 Std speed*

3. Select the network type relevant to the devices connected to your radio. If your radio is not connected to any other devices any option can be selected.

*Selecting **0183 Std speed** will disable the built-in AIS receiver, where applicable.*

The **Network output** setting determines the baud rate of the NMEA 0183 input:

Network output setting	NMEA 0183 input baud rate
NMEA 2000	Standard speed (4,800)
NMEA 0183 High Speed	High speed (38,400)
NMEA 0183 Standard Speed	Standard speed (4,800)

5.13 Entering your MMSI number

To program your radio with your MMSI number follow the steps below.

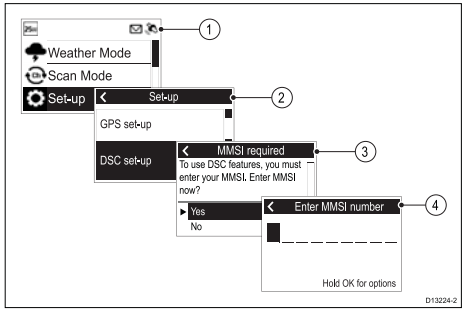

From the Set-up menu: (**Menu** > **Set-up**)

1. Select **DSC set-up**.
2. Select **MMSI**.

*The **MMSI required** message will be displayed if no MMSI number has been set.*

3. Select **Yes**.
4. Use the **Rotary knob** or the **Channel Up** and **Channel Down** buttons on a Raymic handset to cycle through the available numbers and press **OK** to confirm each number and move to the next digit.

   You should only enter the unique 9 digit MMSI number provided by your licensing authority.

   MMSI numbers starting with a '0' are only used for groups and coast stations. If you enter a '0' as the first digit the radio will assume you are entering a ship station MSI and automatically assign a '0' as the second digit this is to ensure a group MMSI is not entered as the radio's unique MMSI.

5. Press the **Back** button at any time to edit digits you have already entered.
6. Press and hold the **OK** button to display options to **Move cursor** back and forward through the digits.
7. When the final digit is confirmed select **DONE**.

   Example

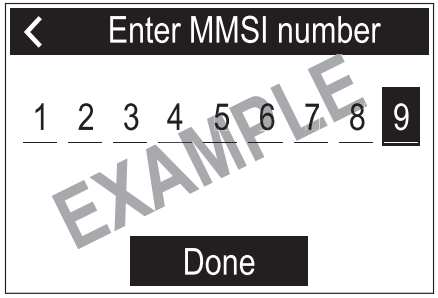

8. The MMSI is displayed onscreen, check that it is correct, then:
   i. Select **Yes – Save**, or
   ii. if the number entered is not correct select **No – Retry**.

Caution: MMSI and ATIS ID entry

You can only enter the MMSI number and ATIS ID once!

If you store an incorrect MMSI number or ATIS ID in your product, it will have to be reset by an authorized **Raymarine**® dealer.

5.14 Entering your ATIS ID

A unique ATIS ID must be entered before ATIS mode can be enabled.

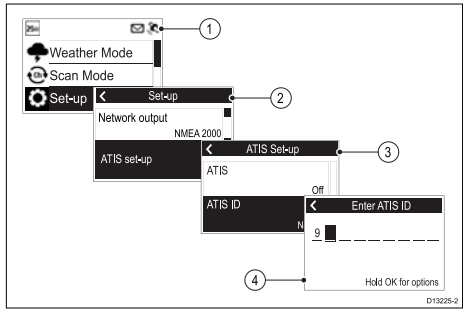

From the Main menu.

1. Select **Set-up**.
2. Select **ATIS set-up**.
3. Select **ATIS ID**.

   Not set *will be displayed if no ATIS ID has been set.*

   The first digit is set to a '9' and cannot be changed, this is because all ATIS IDs start with a '9'.

   As most ATIS IDs consist of a '9' followed by your 9 digit MMSI number; if your radio already has an MMSI number the ATIS ID will be pre-filled in this format.

4. If the ATIS ID has been pre-filled, check it carefully against your issued ATIS ID.
5. To enter your ATIS ID manually, use the **Rotary knob** or the **Channel Up** and **Channel Down** buttons on a Raymic handset to cycle through the available numbers and press **OK** to confirm each number and move to the next digit.

   You should only enter the unique 10 digit ATIS ID provided by your licensing authority.

6. Press the **Back** button at any time to edit digits you have already entered.
7. Press and hold the **OK** button to display options to **Move cursor** back and forward through the digits.
8. When the final digit is confirmed select **DONE**.

   Example

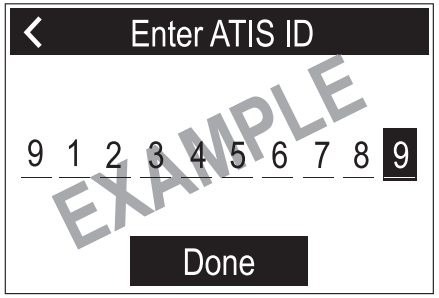

9. The ATIS ID is displayed onscreen, check that it is correct, then:
   i. Select **Yes – Save**, or
   ii. if the number entered is not correct select **No – Retry**.

Caution: MMSI and ATIS ID entry

You can only enter the MMSI number and ATIS ID once!

If you store an incorrect MMSI number or ATIS ID in your product, it will have to be reset by an authorized **Raymarine**® dealer.

81381-3-en-US_A5_PRINT.pdf 54
5/4/2020 3:26:32 PM

Enabling and disabling ATIS mode

ATIS is a European system used on some inland waterways. A unique ATIS ID must be entered before ATIS mode can be enabled.

With ATIS mode enabled the radio's region will be fixed to the INT (international) frequency band and the following functions are disabled:

- DSC functions
- Watch Mode
- Scan Mode
- High/low power is restricted on certain channels

From the Main menu.

1. Select **Set-up**.
2. Select **ATIS set-up**.
3. Select **ATIS**.

   If no ATIS ID has been set then you will be requested to enter one before ATIS mode is enabled.
4. If an ATIS ID has already been set then select **On** to enable ATIS mode or **Off** to disable ATIS mode.

5.15 Changing the radio region

Prior to using the radio you must set the Frequency band to the region your radio will be used in.

From the Main menu:

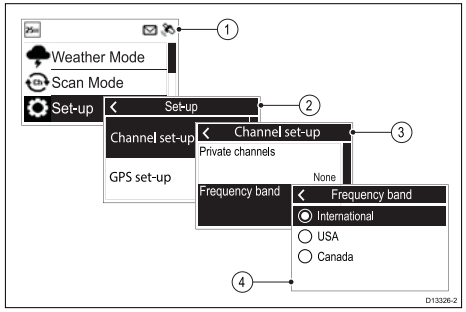

1. Select **Set-up**.
2. Select **Channel set-up**.
3. Select **Frequency band**.
4. Select the relevant region from the list.

   The available options are:

   - ***International***
   - ***USA***
   - ***Canada***

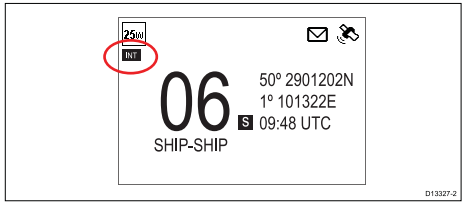

An icon is displayed on the Homescreen that identifies which region has been set.

5.16 Switching between high and low transmit power

You can switch transmit power using the HI/LO button on the Handset / Fistmic.

The transmit power can also be changed from the **Set-up** menu: **Menu** > **Set-up**

1. Select **Power output**.

   Selecting the Power output option will switch between High (25 watt) and Low (1 watt) power output.

5.17 GNSS (GPS) set up

If your radio has a GNSS (GPS) position fix then the following information can be displayed:

- latitude
- longitude
- UTC time
- COG and SOG

When position data is available the satellite icon is displayed onscreen.

If no position data is available then the latitude, longitude and time can be entered manually so that it can be included in DSC distress transmissions.

Position data received from other vessels can be displayed on a connected Raymarine® multifunction display.

Enabling and disabling the internal GNSS (GPS)

From the **GPS set-up** menu: **Menu** > **Set-up** > **GPS set-up**

1. Select **Integrated GPS**.

   Selecting **Integrated GPS** will switch the radio's internal GNSS receiver On and Off.

Switching between internal and external antenna

Your radio's built-in GNSS (GPS) receiver includes and internal antenna, to improve performance you can connect an external antenna. You must select which antenna you are using.

From the **GPS set-up** menu: **Menu** > **Set-up** > **GPS set-up**

1. Select **GPS antenna**.

   Selecting **GPS antenna** will switch between the internal antenna and external antenna.

No position data

If no position data is available or position data becomes unavailable; after 10 minutes an audible warning is sounded, the GNSS (GPS) icon flashes and the **No position data** message is displayed.

Once the warning has been acknowledged the GNSS (GPS) icon will continue to flash. The **No position data** warning is repeated every 4 hours if position data is still unavailable, has not been entered manually or has been entered manually but over 23.5 hours ago.

If position data has been entered manually the display alternates between displaying the manual position and time and the **Manual Position** message. if the manually entered position has not been updated in the last 4 hours the GNSS (GPS) icon flashes and an audible warning is sounded. This warning will be repeated every 4 hours until position is manually updated or position data becomes available.

Where no position data is available or has not been manually updated for 23.5 hours then position data will change to '9's and time will change to '8's.

Entering position manually

If GPS position data is not available it can be entered manually.

From the **GPS set-up** menu: **Menu** > **Set-up** > **GPS set-up**.

1. Select **Set manual position**.

   The Manual position screen requires you to input latitude, longitude and UTC time.

2. Use the **Rotary knob** or the **Channel Up** and **Channel Down** buttons on a Raymic handset to cycle through the available numbers and press **OK** to confirm each number and move to the next digit.
3. When the relevant information has been entered select **OK** to confirm the details.

Selecting (GNSS) GPS information to display

You can change the GNSS (GPS) data that is displayed on the Homescreen.

From the **GPS set-up** menu: **Menu** > **Set-up** > **GPS set-up**.

1. Select **Homescreen display**.

   Selecting Homescreen display will switch between **Location & time** and **Location & COG/SOG**.

The **Homescreen display** option is also available from the **Display set-up** menu: **Set-up** > **Display set-up** > **Homescreen display**.

Setting time format and offset

You can change the Format and Offset that is applied to the time displayed onscreen.

From the **Units** menu: **Menu** > **Set-up** > **Units**.

1. Select **Time format**.

   Selecting Time format will switch between **12 hour** and **24 hour** format.

2. Select **Time offset**.
3. Adjust the offset to the desired value using the **Rotary knob** or the **Channel Up** and **Channel Down** buttons on a Raymic handset.
4. Select **OK** to confirm the selection.

5.18 Station priority (Ray63 and Ray73 only)

The Ray63 and Ray73 can have a Local Fistmic, connected to the front connector, and a Raymic (remote) handset, connected to the rear connector.

The following rules apply to station priority:

- The Local station always takes priority over the Remote station.
- Unless a Distress call is in progress, any button press on the Local station will take control from the Remote station.
- If the Remote station is inactive for 3 seconds, the Local station can take control and complete an incomplete Distress call.
- The Local station can interrupt the Remote stations's voice broadcasts by pressing the **PTT** button.
- The Local station will retain control for 3 seconds after the last button press.
- The information on the station which has control is repeated on the other station's display.

81381-3-en-US_A5_PRINT.pdf 56

5/4/2020 3:26:32 PM

Chapter 6: Wireless handset stations

Chapter contents

- 6.1 Wireless handsets on page 58
- 6.2 Connecting a wireless handset to the hub on page 58
- 6.3 Connecting the wireless speaker to the Wireless handset on page 59
- 6.4 Wireless set-up menu options on page 60

81381-3-en-US_A5_PRINT.pdf 57 5/4/2020 3:26:32 PM

6.1 Wireless handsets

Wireless handsets are compatible with the Ray63 and Ray73 VHF DSC radios. Using the optional wireless accessories you can create up to 2 fully functional wireless handset stations.

As a minimum the Wireless hub (A80540), Wireless hub adaptor cable (R70739) and Wireless handset (A80544) are required to create a wireless handset station. Additionally a Wireless speaker (A80543) can be connected to each Wireless handset.

After connecting your Wireless hub to the Second station connector on the rear of your Ray63 / Ray73 Base station, the process for setting up a wireless handset station should be:

1. Fully charge the Wireless handset.
2. Connect the Wireless handset to the Wireless hub.
3. If required, connect a Wireless speaker to the Wireless handset.

Warning: Retain a wired handset station

A wired handset station should always be connected and available.

Wireless handset charging

When inserted into the wireless handset charging holster the wireless handset will be charged using inductive charging.

Attention

Ensure your wireless handset is fully charged before use.

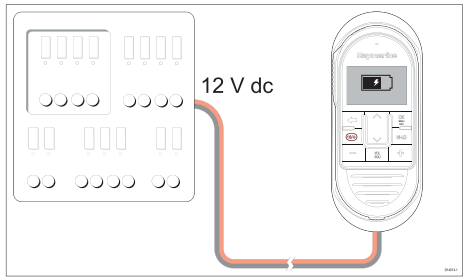

	Charging Whilst charging a battery symbol will gradually fill up.
	Charged When fully charged the battery symbol will be full.

With the Handset powered on the battery symbol will be displayed in the status bar at the top of the screen.

With the handset powered off the battery symbol is displayed fullscreen.

6.2 Connecting a wireless handset to the hub

Wireless handsets must be connected to the radio via a Wireless hub.

When the Wireless handset is powered on for the first time you will need to connect it to a Wireless hub.

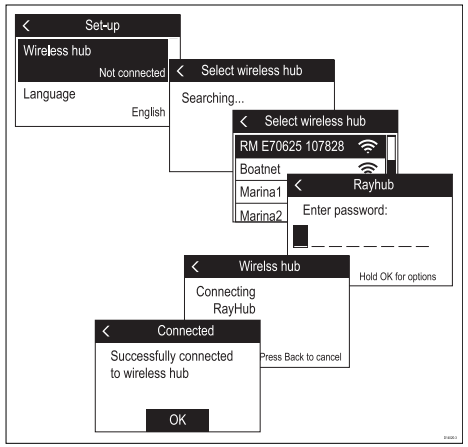

1. Select **Wireless hub**.

   The handset will display a list of wireless devices in range.
2. Select your Wireless hub from the list.

   The Wireless hub's default name is 'RM' followed by the 6 digit part number and 7 digit serial number of the radio that the Wireless hub is connected to (e.g.: Radio part number: E70625 and serial number: 1070828 = Hub name: RM E70625 107828).

3. Enter the password.

   *You can check the Wireless hub's password using a Wired handset by selecting.**Menu** > **Set-up** > **Wireless set-up** > **Wireless hub set-up** > **Password**.*

   The handset will now connect to the Wireless hub.
4. Select **OK**.

81381-3-en-US_A5_PRINT.pdf 58
5/4/2020 3:26:32 PM

Checking the Wireless hub's password

You can check the Wireless hub's password at anytime using a Wired handset.

1. Select **Menu**.
2. Select **Set-up**.
3. Select **Wireless set-up**.
4. Select **Wireless hub set-up**.
5. Select **Password**.

The current password is displayed.

Changing your wireless hub's password

If desired you can change the Wireless hub's default password using a Wired handset.

1. Select **Wireless hub set-up** from the **Wireless set-up** menu: (**Menu** > **Set-up** > **Wireless set-up** > **Wireless hub set-up**).
2. Select **Password**.
3. Use the **Channel Up**, **Channel Down** and **OK** buttons to change the default password.

   The password can use up to 8 characters. For the most secure password use a variety of upper and lower case letters, numbers and symbols.

4. When finished, select **OK** to confirm.
5. Re-connect your Wireless handset to the hub following the 6.2 Connecting a wireless handset to the hub procedure.

Note:

- While the password change is being applied the **Wireless set-up** menu will be unavailable.
- Ensure you make a note of your Hub's new password.

Changing the hub's wireless channel

If you experience interference with your wireless handset station, you can change the wireless channel used by the hub to a channel that is less congested with wireless signals.

You must use a Wired handset to change the Hub's wireless credentials.

1. Select **Wireless hub set-up** from the **Wireless set-up** menu: (**Menu** > **Set-up** > **Wireless set-up** > **Wireless hub set-up**).
2. Select **Wi-Fi channel**.
3. Select a wireless channel.

   Channels 1 to 13 are available; use a wireless network analyzer to find the least-congested channel. The preferred wireless channels are 1, 6 and 11, as these overlap with the fewest other wireless channels. However, if these channels are congested then try others.

Note:

- While the channel change is being applied the **Wireless set-up** menu will be unavailable.
- Your Wireless handset will automatically reconnect to the hub using the new channel.

Changing the Wireless hub's name

You can change the name or SSID of your Wireless hub at anytime.

You must use a Wired handset to change the Hub's wireless credentials.

1. Select **Wireless hub set-up** from the **Wireless set-up** menu: (**Menu** > **Set-up** > **Wireless set-up** > **Wireless hub set-up**).
2. Select **Hub Name**.
3. Use the **Channel Up**, **Channel Down** and **OK** buttons to change the default name.

   The maximum name length is 10 characters.

4. When finished, select **OK** to confirm.

Note:

- While the name change is being applied the **Wireless set-up** menu will be unavailable.
- Your Wireless handset will automatically reconnect to the hub using the new name.

6.3 Connecting the wireless speaker to the Wireless handset

You can connect a Wireless speaker to your Wireless handset.

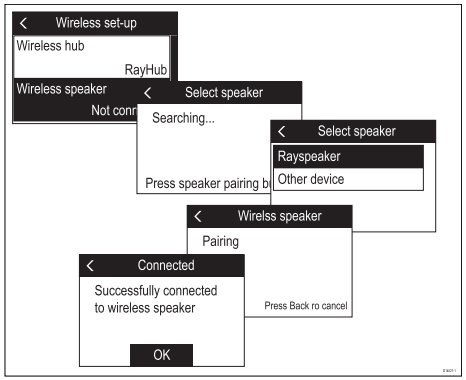

1. Power on the Wireless speaker.
2. Press the **Pairing** button on the front of your Wireless speaker to pair with a Wireless handset for the first time.
3. Using the Wireless handset, select **Wireless speaker** from the **Wireless set-up** menu: **Menu** > **Maintenance** > **Wireless set-up**

   The handset will search for available devices.
4. Select your Wireless speaker from the list.

   The Wireless handset will now pair with the Wireless speaker.
5. Select **OK**.

81381-3-en-US_A5_PRINT.pdf 59 5/4/2020 3:26:32 PM

The Wireless handset's audio will now be heard through the Wireless speaker.

Note:

- You can only output audio to 1 speaker from the same handset.
- If the pairing is unsuccessful, power the wireless speaker off and then back on again and repeat the process.

Disconnecting a Wireless speaker

To disconnect your Wireless speaker from the Wireless handset follow the steps below:

With the speaker connected to the handset:

1. Press the **Pairing** button on the front of the speaker.
2. Once disconnected the speaker can be connected to any Wireless handset by following the 6.3 Connecting a wireless speaker to the wireless handset procedure.

6.4 Wireless set-up menu options

The Wireless set-up menu is available when a Wireless hub is connected.

Menu item	Description	Options
Wireless hub	Enables you to search for and connect to a Wireless hub.	List of available networks.
Wireless hub set-up	Provides access to the Wireless hub's settings. **Note:** The Wireless hub set-up menu can only be accessed using a Wired handset.	• Wireless hub name • Password • Wi-Fi channel
Wireless speaker	Enables you to search for and connect to a Wireless speaker.	Search for devices.

Wireless hub set-up menu options

Note:

The Wireless hub set-up menu can only be accessed using a Wired handset.

Menu item	Description	Options
Hub name	The Wireless hub's default name is 'RM' followed by the 6 digit part number and 7 digit serial number of the radio that the Wireless hub is connected to (e.g.: Radio part number: E70625 and serial number: 1070828 = Hub name: RM E70625 107828).	Edit hub name
Password	You can change the password to any alphanumeric (including standard symbols) password using up to 8 characters.	Change password
Wi-Fi channel	Enables you to change the wireless (2.4Ghz) channel used by the Wireless hub.	Channels 1 to 13

81381-3-en-US_A5_PRINT.pdf 60 5/4/2020 3:26:32 PM

Wireless handset not connected menu

When a connection to a Wireless hub is not available or connection is cancelled, the following menu options will be displayed on the Handset.

Menu item	Description	Options
Wireless hub	Enables you to search for and connect to a Wireless hub.	List of available networks.
Language	Enables selection of the user interface language.	• English — English • Español — Spanish • Français — French • Deutsch — German • Italiano — Italian
Backlight	Provides access to the Backlight level	• 1 to 9 • Off
Contrast	Provides access to the Contrast level	• 1 to 10
Key beep	Enables adjustment of the audible beep when pressing buttons.	• Off • Quiet (default) • Loud

81381-3-en-US_A5_PRINT.pdf 61 5/4/2020 3:26:33 PM

Chapter 7: Digital selective calling (DSC)

Chapter contents

- 7.1 Digital Selective Calling (DSC) on page 64
- 7.2 Distress calls on page 64
- 7.3 Urgency calls on page 67
- 7.4 Safety calls on page 67
- 7.5 Individual (routine) calls on page 67
- 7.6 Group calls on page 68
- 7.7 Position requests on page 68
- 7.8 Phonebook on page 69
- 7.9 Call logs on page 69
- 7.10 Test calls on page 70
- 7.11 DSC set-up menu options on page 70

81381-3-en-US_A5_PRINT.pdf 63 5/4/2020 3:26:33 PM

7.1 Digital Selective Calling (DSC)

Traditional VHF radio systems require users to listen until someone speaks, and then determine whether the call is for them. DSC ensures that calls are received by alerting or announcing the intended recipient(s) first so they are ready to listen to the subsequent message on the relevant channel.

DSC is part of the Global Maritime Distress and Safety System (GMDSS), a maritime communications system for emergency and distress messages and all types of routine communications such as ship-to-ship or ship-to-shore.

DSC is a digital signalling system, which operates on VHF channel 70. DSC calls include other data such as your vessel's identification number, purpose of the call, your position and the channel you want to speak on.

DSC calls can be divided into 4 categories and are prioritized as shown below:

1. Distress
2. Urgency
3. Safety
4. Routine

Distress

A Distress call should only be used when there is imminent danger to a vehicle or person that requires immediate assistance.

When making a distress call the following information is transmitted to all stations within range:

- Vessel MMSI number.
- Vessel position (must be input manually if no position data is available).
- Local time (must be input manually if no position data is available).
- Nature of the distress (when designated).
- Transmission frequency.

The call is automatically repeated at approximately 4 minute intervals until it is acknowledged either by a Ship radio station (CRS) or a vessel within radio range. Distress calls must be followed by a MAYDAY call on priority channel 16.

Urgency

An urgency call should be used when there is danger to a vehicle or person that does not require immediate assistance.

When making an urgency call the following information is transmitted to all stations within range:

- Vessel MMSI number.
- Vessel position (must be input manually if no position data is available).
- Local time (must be input manually if no position data is available).
- Transmission frequency.

Once an urgency call is sent it must be followed with a PAN PAN voice message on channel 16 and include the necessary details.

Safety

A safety call should be used when there is an important navigational warning or meteorological forecast/broadcast. Safety alerts can also used for communications during search and rescue operations.

When making a safety call the following information is transmitted to all stations within range:

- Vessel MMSI number.
- Vessel position (must be input manually if no position data is available).
- Local time (must be input manually if no position data is available).
- Transmission frequency.

Once a safety call is sent it must be followed with a SECURITE voice message on channel 16 and include the necessary details.

Individual (routine)

Routine calls are used for contacting other vessels, marinas, or shore stations.

Routine calls are made on channel 70 using the dedicated Maritime Mobile Service Identity (MMSI) number of the station to be contacted, selecting a VHF working channel and sending the call. Both radios automatically switch to the chosen channel for conversation.

Routine calls can also be made to groups — When groups of ships need the same information (yacht races, club rallies etc.) a special group-call identity can be used to enable restricted broadcast calls.

> **Note:**
>
> To transmit precise position data, the radio must be connected to a GNSS (GPS) receiver. Otherwise, regular manual position updating is required.

7.2 Distress calls

Making a designated distress call

When making a Distress call you can specify the nature of the distress, if GNSS (GPS) data is not available you must also specify your coordinates.

> **Note:**
>
> Your radio must have an MMSI number saved before DSC functions can be used.

From the Distress call menu: **Menu** > **DSC Calls** > **Distress calls**

1. Select a distress type from the list.
   - If your radio is receiving a valid GNSS (GPS) position then the distress type and coordinates are displayed on-screen, otherwise you will be prompted to enter your position coordinates.
2. If prompted, enter your position coordinates and local time using the **Rotary knob** or **Channel Up** and **Channel Down** buttons on a Raymic handset to enter the relevant details.
3. When complete press the **OK** button.
4. Follow the steps for *'Making a Distress Call'* to transmit the distress.

81381-3-en-US_A5_PRINT.pdf 64

5/4/2020 3:26:33 PM

Making a distress call

In an emergency you can use your unit to make an automatic DSC distress call.

With the spring loaded cover open:

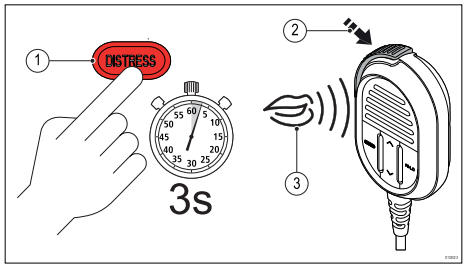

1. Press and hold the **DISTRESS** button for 3 seconds.

   *Once the **DISTRESS** button is pressed a 3 second count down will begin, when the count down reaches zero the DSC distress call is transmitted.*

   The distress call is repeated automatically until it is acknowledged.

2. Press and hold the **PTT** button, then slowly and clearly speak the details of the distress in the following format:

   MAYDAY, MAYDAY, MAYDAY

   This is <state name of vessel 3 times>

   MAYDAY <state name of vessel 1 time>

   My position is <state latitude and longitude, or true bearing and distance from a known point.>

   I am <state nature of distress e.g. sinking, on fire etc.>

   I have <state number of persons on board and any other information — drifting, flares fired etc.>

   I REQUIRE IMMEDIATE ASSISTANCE

   OVER

3. Release the **PTT** button.

Making a Mayday call

In an emergency you can also make a Mayday call following the instructions below.

1. Press the **16 PLUS** button.
2. Press and hold the **PTT** button.
3. Slowly and clearly speak the details of the distress:

   MAYDAY, MAYDAY, MAYDAY

   This is — state name of vessel 3 times

   MAYDAY — state name of vessel 1 time

   My position is — state latitude and longitude, or true bearing and distance from a known point

   I am — state nature of distress e.g. sinking, on fire etc.

   I have — state number of persons on board and any other information — drifting, flares fired etc.

   I REQUIRE IMMEDIATE ASSISTANCE

   OVER

4. Release the **PTT** button.
5. If an acknowledgement is not received then repeat steps 2 to 4 above.

Cancelling a distress call before transmission

To cancel a distress call before it is transmitted follow the steps below:

1. Release the **DISTRESS** button before the countdown timer completes.

   When the button is released you will be returned to normal operation.

Cancelling a distress call after transmission

A distress call can be cancelled after it has been transmitted.

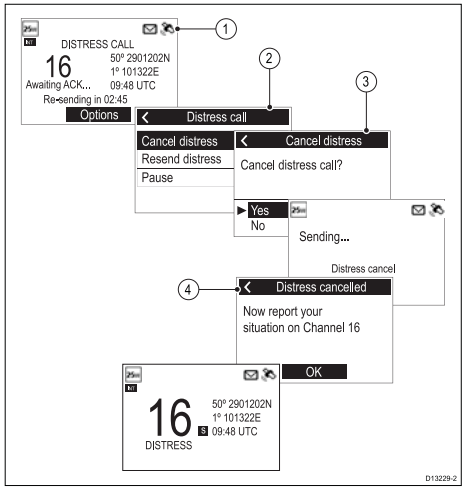

1. Select **Options**.
2. Select **Cancel distress**.
3. Select **Yes** to confirm cancellation.
4. Select **OK**.
5. Press and hold the **PTT** button and make a broadcast to all stations giving your vessel's name, call sign and MMSI number and cancel the false distress alert

   Example: "All, Stations, All Stations, All Stations. This is <NAME>, <CALL SIGN>, <MMSI ID>, <POSITION>.

81381-3-en-US_A5_PRINT.pdf 65

5/4/2020 3:26:33 PM

Cancel my distress alert of <DATE>, <TIME>, <NAME>, <CALL SIGN>"

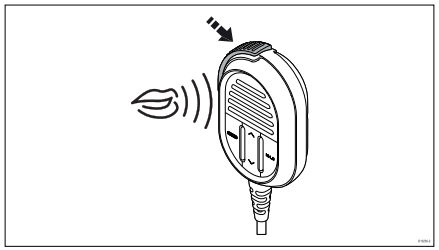

6. Repeat the broadcast described in step 5.

Receiving a distress call

It is expected that only a Ship Radio Station (CRS) will acknowledge DSC distress calls and will act as the coordinator for the rescue operation.

When a distress call is received an alarm is sounded at full volume and the LCD displays information relating to the distress.

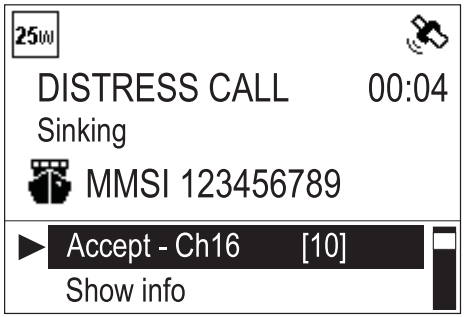

If the **Auto channel change** function is enabled; 10 seconds after receipt of a distress call the radio will automatically re-tune to channel 16. Otherwise the user is prompted to change channel manually.

The details of the distress call are recorded in the distress log and the envelope icon will flash to let you know a message has been received. When connected to a **Raymarine**® multifunction display (**MFD**) the position data from the distress call can also be displayed in the Chart application.

When the received distress call is acknowledged by the CRS or by another station the radio will resume normal operation.

Ignoring a distress call

You can ignore a distress call by muting the alarm and cancelling the distress call screen.

If your radio is already tuned to the priority channel then the **Ignore** option will not be available.

With an incoming distress call displayed.

1. Select **Ignore** from the options displayed.

   Normal operation is resumed.

Acknowledging a distress call

Distress calls must only be acknowledged if the call continues without acknowledgement from a CRS, you are close enough to the distressed vessel to be of assistance and are prepared to relay the distress to a CRS by any means possible. Class D DSC radios are forbidden from automatically acknowledging distress calls. Acknowledgement must only be made by voice message on channel 16.

After receiving a distress call that has gone unanswered:

1. Switch to channel 16 to listen for the distress voice message.
2. Wait for the CRS to acknowledge the call.
3. If the distress call is not acknowledged by another station then acknowledge the call as follows:

   MAYDAY

   (MMSI of the vessel in distress)

   Name of vessel in distress <repeated 3 times>

   Call sign of the vessel in distress

   This is <MMSI of your vessel>, <name of your vessel repeated 3 times> <call sign of your vessel>

   RECEIVED MAYDAY
4. You MUST then notify the shore authorities by any means possible to relay the distress call.

Manually relaying a distress call

A distress relay should only be sent if: the person or vehicle in distress is unable to transmit the distress call itself, for example red flares sighted at night or the person or vehicle in distress is out of range of a CRS and you have already acknowledged the distress by voice message. You can also relay a received distress relay alert manually if it goes unanswered.

1. Switch to channel 16
2. Slowly and clearly speak the details of the distress:

   MAYDAY RELAY, MAYDAY RELAY, MAYDAY RELAY

   This is <MMSI of your vessel, name of your vessel repeated 3 times and your call sign>

   Received the following MAYDAY from <MMSI of vessel in distress, name of vessel in distress, call sign of vessel in distress>

   Message begins

   Message received from vessel in distress or details of the distress

   Message ends

   OVER

Distress relays sent by other stations

When a ship station or another vessel, has received, and acknowledged a DSC distress alert it may transmit a distress alert relay to other vessels in the immediate area.

Distress relays sent from other stations can be received by the radio.

The radio cannot re-send a distress relay automatically. If required you can relay a distress relay message manually.

If a distress relay is sent specifically to the radio then it can be acknowledged, otherwise acknowledgement is not required.

81381-3-en-US_A5_PRINT.pdf 66 5/4/2020 3:26:33 PM

Acknowledging a distress relay sent to your vessel

If a distress relay is specifically sent to your vessel this will be because the sender deems you to be in a position to assist in the rescue. The distress relay information is displayed onscreen.

When a distress relay is received:

1. Select **Show info** from the options to review the relevant details.
2. If the distress relay was sent individually to you, select **Accept** to send a distress relay acknowledgement.
3. Ensure the radio is tuned to channel 16.

Note: Distress relay calls can only be acknowledged automatically when sent individually to you.

7.3 Urgency calls

Making an urgency call

An urgency call should be used when there is danger to a vehicle or person that does not require immediate assistance. Urgency calls are transmitted to all stations.

From the **All ships call** menu: **Menu** > **DSC Calls** > **All ships call**.

1. Select **Urgency**.
2. Select the channel for subsequent communication.

   The call is transmitted. Once the call has been successfully transmitted '**Sent**' is displayed onscreen and the channel is changed to the specified channel.
3. Press the **OK** button.
4. Press and hold the **PTT** button and speak the following message:

   PAN PAN, PAN PAN, PAN PAN

   ALL STATIONS, ALL STATIONS, ALL STATIONS

   This is — MMSI of your vessel, name of your vessel repeated 3 times, call sign of your vessel.

   Position — Your vessel's position.

   Reason for call — State the reason for the call and include all information which will assist in the rescue.

OVER

Receiving an urgency call

When an urgency call is received:

1. Select **Show info** from the options to review relevant call details.
2. Select **Accept** at any time to accept the call.

   If auto channel change is turned on then the channel will automatically change after 10 seconds.

   The radio is re-tuned to the specified channel.
3. Listen for the urgency call message.

7.4 Safety calls

Making a safety call

Safety calls should be used when there is an important navigational warning or meteorological forecast/broadcast. Safety alerts can also be used for communications during search and rescue operations.

From the **All ships call** menu: **Menu** > **DSC Calls** > **All ships call**.

1. Select **Safety**.
2. Select the channel for subsequent communication.

   The call is transmitted. Once the call has been successfully transmitted '**Sent**' is displayed onscreen and the channel is changed to the specified channel.
3. Press the **OK** button.
4. Press and hold the **PTT** button and speak the following message:

   SECURITE, SECURITE, SECURITE

   ALL STATIONS, ALL STATIONS, ALL STATIONS

   This is — MMSI of your vessel, name of your vessel repeated 3 times, call sign of your vessel.

   Position — Your vessel's position.

   Reason for call — state the reason for the safety call.

OUT

Receiving a safety call

When a safety call is received:

1. Select **Show info** from the options to review relevant call details.
2. Select **Accept** at any time to accept the call.

   If auto channel change is turned on then the channel will automatically change after 10 seconds.

   The radio is re-tuned to the specified channel.
3. Listen for the safety call message.

7.5 Individual (routine) calls

Individual calls can be made to contacts saved in your Phonebook or to any station by manually entering an MMSI number.

Note:
When calling a ship station there is no need to select a channel for communication.

If a call cannot be accepted then a reason code is displayed.

No Reason	No reason given
Congestion	Congestion at maritime switching centre
Busy	Station Busy
Queue	Queue indication
Barred	Station barred
No operator	No operator available
Unavailable	Operator temporarily unavailable

81381-3-en-US_A5_PRINT.pdf 67

5/4/2020 3:26:33 PM

Disable	Equipment disabled
Unable Ch	Unable to use proposed channel
Unable mode	Unable to use proposed mode

Making an Individual call

From the **Individual Call** menu: **Menu** > **DSC Calls** > **Individual Call**.

1. Select **Phonebook** to make a routine call to a contact saved in your Phonebook, or
2. Select **Recent Calls** to make a routine call to a contact that you have called recently, or
3. Select **Enter MMSI** to manually enter the MMSI number of the station you want to contact.
4. Select a contact or enter an MMSI manually and press the **OK** button.
5. Select the Channel you want to transmit the call on.

   If the MMSI is a CSR then the radio will automatically tune to the correct Channel. The radio will wait for an acknowledgement to be received.

6. If an acknowledgement is received, press the **OK** button.
7. Press and hold the **PTT** button and speak your message.
8. Release the **PTT** button when you have completed your message.

Receiving an Individual call

With an incoming individual call displayed:

1. Select **Show info** from the options to review relevant call details.
2. Select **Reply on Ch ##** at any time to accept the call.

   If auto channel change is turned on then the channel will automatically change after 10 seconds.

   The radio is re-tuned to the specified channel.
3. To reject the call, select **Reject**.
4. If you rejected the call, select a reason for the rejection from the list.

Confirmation of the acceptance or rejection of the call is displayed. If you have accepted the call then the radio will re-tune to the requested channel.

7.6 Group calls

Group calls can be made to groups of vessels sharing the same Group MMSI numbers.

Group calls are made by selecting a saved group contact from the **Phonebook** or by entering the Group MMSI number for the group you want to call.

Making a group call

From the **Group Call** menu: **Menu** > **DSC Calls** > **Group Call**.

1. Select **Phonebook** to make a call to a group saved in your Phonebook, or
2. Select **Recent Calls** to make a call to a group that you have called recently, or
3. Select **Enter MMSI** to manually enter the MMSI number of the group you want to contact.
4. Select a group or enter an MMSI manually and press the **OK** button.
5. Select the Channel you want to transmit the call on.

   The radio will wait for an acknowledgement to be received.

6. If an acknowledgement is received, press the **OK** button.
7. Press and hold the **PTT** button and speak your message.
8. Release the **PTT** button when you have completed your message.

Receiving a group call

> **Note:**
> To receive a call made to a Group, the Group's MMSI number must be saved in your Ponebook.

With an incoming group call displayed:

1. Select **Show info** from the options to review relevant call details.
2. Select **Reply on Ch ##** at any time to accept the call.

   If auto channel change is turned on then the channel will automatically change after 10 seconds.

   The radio is re-tuned to the specified channel.
3. To reject the call, select **Reject**.
4. If you rejected the call, select a reason for the rejection from the list.

Confirmation of the acceptance or rejection of the call is displayed. If you have accepted the call then the radio will re-tune to the requested channel.

7.7 Position requests

The radio can request position information from any station capable of responding to the request.

Position requests can be sent to any contact stored in the **Phonebook** or by manually inputting the station's MMSI number.

When connected to a Raymarine® multifunction display (MFD) the position data from the request can also be display in the Chart app.

Making a position request

You can request the position of another station.

From the **Position Request** menu: **Menu** > **DSC Calls** > **Position Request**.

81381-3-en-US_A5_PRINT.pdf 68 5/4/2020 3:26:33 PM

1. Select **Phonebook** to request the position of a contact saved in your Phonebook, or
2. Select **Recent Calls** to request the position of a contact that you have called recently, or
3. Select **Enter MMSI** to manually enter the MMSI number of the station that you want to request the position of.
4. Select a contact or enter an MMSI manually and press the **OK** button.

   The position request is sent. When a response is received the position of the contact is displayed.

Responding to a position request

With a Position request displayed:

1. Select **Send position** to respond with your current location, or
2. Select **Cancel** to ignore the request.
3. If the position reply is set to manual then select **SEND** to send the position report.
4. Select **OK** to resume normal operation.

If the **Position requests** setting, found in the **GPS set-up** menu is set to **Auto accept** then the response is sent automatically.

Setting automatic response to position requests

You can configure your radio to respond to incoming position requests automatically.

From the **DSC set-up** menu: **Menu** > **Set-up** > **DSC set-up**

1. Select **Position requests** to switch between Manual accept (default) and Auto accept.

7.8 Phonebook

The Phonebook can be used to save up to 100 contacts.

You can add, edit and delete contacts stored in the Phonebook.

Adding a Phonebook entry

You can save contacts in the Phonebook by entering their MMSI and assigning a name to the contact.

From the **DSC Calls** menu: **Menu** > **DSC Calls**.

1. Select **Phonebook**.
2. Select **Add new**.
3. Select the type of contact.
   - Vessel
   - Group
   - ship station
4. Use the **Rotary knob** or the **Channel Up** and **Channel Down** buttons on a Raymic handset to cycle through the available numbers and press **OK** to confirm and move to the next digit.
5. Press the **OK** button to confirm the MMSI.
6. Use the **Rotary knob** or the **Channel Up** and **Channel Down** buttons on a Raymic handset to cycle through the available characters and press **OK** to confirm and move to the next character.

   The maximum length for contact names is 10 characters.

7. If the Contact name is less than 10 characters, press and hold the **OK** button and select **Save**.
8. Press the **Back** button at any time to edit characters you have already entered.
9. Press and hold the **OK** button and select **Move cursor** to edit an existing character.
10. When complete press the **OK** button to return to the Phonebook.

Editing a Ponebook entry

From the **DSC Calls** menu: **Menu** > **DSC Calls**.

1. Select **Phonebook**.
2. Select the contact you want to edit.
3. Select **Edit name** or **Edit MMSI**

   The contact's MMSI or name is displayed.
4. Use the **Rotary knob** or the **Channel Up** and **Channel Down** buttons on a Raymic handset to change a character.
5. Press the **OK** button to confirm each character and move to the next.
6. When you have completed your changes press the **OK** button again to save the changes.

Deleting a Phonebook entry

From the **DSC Calls** menu: **Menu** > **DSC Calls**.

1. Select **Phonebook**.
2. Select the contact you want to edit.
3. Select **Delete**.
4. Select **Yes**.

The contact is deleted.

7.9 Call logs

All DSC calls are logged.

The following call types are recorded in call logs:

- distress
- distress relay
- distress acknowledgements
- sent position requests
- received position requests
- group calls
- all ship calls
- individual (routine) calls

The details below are recorded for each call:

- MMSI number(s) (If a call is relayed up to 3 MMSI numbers can be recorded)
- type of call
- date and time of call

81381-3-en-US_A5_PRINT.pdf 69

5/4/2020 3:26:33 PM

- latitude and longitude (if sent with the call)
- nature of distress (specified distress calls only)

If the call was received from a contact in the Phonebook then the contact name is displayed, otherwise the MMSI number is displayed.

Accessing the call logs

Follow the steps below to access the call logs.

From the **DSC Calls** menu: **Menu** > **DSC Calls**.

1. Select **Call logs**.
2. Select the log you want to view:
   - Unread
   - Distress calls
   - Non-distress calls
   - Outgoing calls
   - Position log
3. Select a call and press the **OK** button to view details.
4. Select **Options** to view available options.
   - **Call Back** — return a received call.
   - **Resend** — only available in the outgoing call log.
   - **Call** — available in the position log.
   - **Send position** — available in the position log.
   - **Request position** — available for individual and distress calls.
   - **Save to Phonebook** — available for received and outgoing calls to new contacts.
   - **Send ACK** — available for unacknowledged individual received calls.
   - **Delete** — deletes the log entry.

7.10 Test calls

A Test Call feature is available for the purposes of testing your DSC VHF radio for correct operation.

There are 2 types of test call:

- Test call to the US Ship Guard automated response test call service (MMSI: **003669999**). This type of test call will receive an automated response (acknowledgement).
- Test call to another vessel that has a radio that supports the test call feature. Your radio will automatically acknowledge test calls received from other radios.

For radios that do NOT support the test call feature, correct radio operation can be tested by making an Individual call on channel 70 to another DSC VHF radio.

It is recommended that once you've successfully placed a test call you add the test call MMSI to your radio's Phonebook for easy retrieval for future test calls. For information on how to add an MMSI to your radio's Phonebook, refer to the “Adding a Phonebook entry” section.

Note:

Individual calls (that is, NOT a test call) to the US Ship Guard 003669999 MMSI will NOT receive an automated response.

Note:

The US Ship Guard automated response test call service is only available in the United States and its coastal waters.

Making a Test call

From the **Test call** menu: **Menu** > **DSC Calls** > **Test call**.

1. Select **Phonebook** to make a test call to a contact saved in your Phonebook, or
2. Select **Recent Calls** to make a test call to a contact that you have called recently, or
3. Select **Enter MMSI** to manually enter the MMSI number of the station you want to send a test call.
4. Select a contact or enter an MMSI manually and press the **OK** button.

   The test call is sent.
5. If you called the US Ship Guard automated response test call MMSI (003669999), wait for an acknowledgement. If you made a test call to another vessel with a test call capable radio, your radio will wait for a response.

   When an acknowledgement is received, an audible alarm is sounded and the message (envelope) icon is displayed.

Receiving a test call

Your radio will automatically acknowledge received Test calls from other stations

When a Test call is received a notification is displayed to alert you that a test call has been received and automatically acknowledged.

7.11 DSC set-up menu options

The DSC set-up menu options can be accessed from the following menus:

- **Menu** > **DSC Calls** > **DSC set-up**
- **Menu** > **Set-up** > **DSC set-up**

81381-3-en-US_A5_PRINT.pdf 70 5/4/2020 3:26:33 PM

Menu item	Description	Options
MMSI	To enable the DSC functions on your radio you must enter your unique MMSI number.	
Auto channel change	When automatic channel change is turned on the radio will automatically re-tune after 10 seconds to the requested channel when DSC calls are received.	• On (default) • Off
Position requests	With Position requests set to Auto accept the radio will automatically send out position details when a position request is received.	• Auto accept (default) • Manual accept

81381-3-en-US_A5_PRINT.pdf 71

5/4/2020 3:26:33 PM

Chapter 8: VHF operations

Chapter contents

- 8.1 Watch modes on page 74
- 8.2 Scan Mode on page 74
- 8.3 Priority channels on page 74
- 8.4 Sensitivity on page 74
- 8.5 Private channels on page 74
- 8.6 Automatic Transmitter Identification System (ATIS) and Marcom-C mode on page 75
- 8.7 AIS receiver on page 75
- 8.8 Set-up menu options on page 75

8.1 Watch modes

Watch mode monitors priority channels and the currently selected channel.

There are 2 types of watch mode; **Dual watch** and **Triple watch** or **Tri watch**.

- **Dual watch** — This mode monitors priority channel 16 and the currently selected channel.
- **Triple watch** — This mode monitors priority channel 16, the second priority channel (Channel 09 (default)) and the currently selected channel. The second priority channel can also be set to a user defined channel.

When the radio detects a transmission, Watch mode is suspended until the transmission ends; watch mode will then recommence.

Setting Watch mode

From the **Watch Mode** menu: **Menu** > **Watch Mode**.

1. Select **Dual Watch** or **Triple Watch** as required.

   The radio is now in Watch mode.
2. Select **2nd priority channel** to select a different second priority channel for Triple watch.
3. During Watch mode, press the **Back** button at any time to end the Watch mode and resume normal operation.

8.2 Scan Mode

Scan mode enables automatic searching for channels that are currently broadcasting.

Scan mode will search through available channels and stop when it finds a channel that is currently broadcasting. If the broadcast stops or is lost for more than 5 seconds then the scan will resume.

Channels can be temporarily removed from an active scan, and the direction of scan can also be changed. When the scan reaches the last channel in the band the scan cycle is repeated.

The following scans options are available:

- **All Channels** — All channels in the frequency band the radio is set to are scanned in sequence.
- **All Channels + 16** — All channels in the frequency band the radio is set to are scanned, after each channel is scanned priority channel 16 is scanned.
- **Saved Channels** — Only channels saved to the radio's memory are scanned in sequence.
- **Saved Channels + 16** — Only channels saved to the radio's memory are scanned, after each channel is scanned priority channel 16 is scanned.

> **Note:**
>
> If the weather alert function is activated, the weather alert channel is included in the scan.

Setting Scan mode

Scan mode is started from the main menu.

From the **Scan Mode** menu: **Menu** > **Scan Mode**.

1. Select the relevant Scan mode.

   The radio is now in Scan mode.
2. Select **Edit Saved Channels** to select the channels that will be scanned when performing a Saved channel scan.
3. During Scan mode, press the **Back** button at any time to end the Scan mode and resume normal operation.

8.3 Priority channels

Channel 16 is the dedicated priority channel.

The default secondary priority channel is channel 09. The second priority channel can be changed if desired.

Switching between priority channels

1. Press the **16 / +** button to switch between priority channels.

Setting a second priority channel

You can select which channel you want to use as the second priority channel.

From the **Channel set-up** menu: **Menu** > **Set-up** > **Channel set-up**.

1. Select **2nd priority channel**.
2. Select the channel that you want to assign as the second priority channel.

8.4 Sensitivity

The sensitivity level of the radio can be set to Local mode or Distant mode.

Local mode decreases the receiver sensitivity in high traffic areas to reduce unwanted reception. When in Local mode the 'Loc' icon is displayed in the status bar.

Distant mode sets the receiver sensitivity to full.

Switching sensitivity modes

You can switch between Local and Distant modes at any time.

From the **Set-up** menu: **Menu** > **Set-up**.

1. Select **Sensitivity**.

   Selecting Sensitivity will switch between Local mode and Distant mode (default).

8.5 Private channels

The radio may be able to receive additional Private channels depending on the country it is used in and whether the appropriate licenses are held.

The following Private channel sets can be selected:

- None
- Belgium
- Denmark (pleasure)
- Denmark (fishing)
- Finland (pleasure)

81381-3-en-US_A5_PRINT.pdf 74 5/4/2020 3:26:33 PM

- Finland (fishing)
- Holland (Netherlands)
- Norway (pleasure)
- Norway (fishing)
- Sweden (pleasure)
- Sweden (fishing)
- UK

Selecting a private channel set

You can select the set of private channels you want to use.

From the **Channel set-up** menu: **Menu** > **Set-up** > **Channel set-up**.

1. Select **Private channels**.

   The list of private channel sets is displayed:
2. Select the required private channel set.

8.6 Automatic Transmitter Identification System (ATIS) and Marcom-C mode

ATIS is a European system used on some inland waterways.

VHF radios operating in an ATIS region must be programmed with a unique ATIS number; this can be obtained from the relevant licensing authority. The ATIS number is attached as a digital signal at the end of each transmission and identifies you to the relevant authorities who monitor the system.

When operating in ATIS mode, some of the products features are not available:

- Use of DSC functions is not permitted in ATIS regions.
- Watch modes are not permitted in ATIS regions.
- Channel scanning is not permitted in ATIS regions.
- ATIS regulations restrict the transmit power to 1 watt for the following channels: 6, 8, 10, 11, 12, 13, 14, 71, 72, 74 and 77.

You can enable or disable ATIS using the menus (except on Marcom-C configured units).

Marcom-C mode

Marcom-C mode is a restricted radio configuration for VHF operators with a Marcom-C license. This is applicable to radios operated exclusively in European inland waterways using the ATIS system.

A Marcom-C VHF radio has the ATIS permanently enabled. You will not be able to disable ATIS operation. Marcom-C operation is set by the dealer at point of sale. If you wish to enable or disable Marcom-C mode, you must contact your Raymarine dealer.

For further information please contact Raymarine technical support.

Enabling and disabling ATIS mode

ATIS is a European system used on some inland waterways. A unique ATIS ID must be entered before ATIS mode can be enabled.

With ATIS mode enabled the radio's region will be fixed to the INT (international) frequency band and the following functions are disabled:

- DSC functions
- Watch Mode
- Scan Mode
- High/low power is restricted on certain channels

From the Main menu.

1. Select **Set-up**.
2. Select **ATIS set-up**.
3. Select **ATIS**.

   If no ATIS ID has been set then you will be requested to enter one before ATIS mode is enabled.
4. If an ATIS ID has already been set then select **On** to enable ATIS mode or **Off** to disable ATIS mode.

8.7 AIS receiver

Depending on variant your radio may have a built-in AIS receiver.

With the built-in AIS receiver switched on AIS information can be sent to a connected Raymarine® MFD using either NMEA 0183 or SeaTalkng ®.

Note: If using the built-in AIS receiver and outputting over NMEA 0183, ensure that the baud rate is set to **0183 High speed**: **Menu** > **Set-up** > **Network output** .

Switching AIS on and off

From the **Set-up** menu: **Menu** > **Set-up**.

1. Select **AIS**.

   Selecting AIS will switch the internal AIS receiver On and Off.

8.8 Set-up menu options

The Set-up menu options can be accessed from the Main menu.

81381-3-en-US_A5_PRINT.pdf 75

5/4/2020 3:26:33 PM

Menu	Description	Options
Display set-up	Provides access to the display settings menu.	• Backlight • Shared brightness • Contrast • Homescreen display
Language	Enables selection of the user interface language.	• English — English • Español — Spanish • Français — French • Deutsch — German • Italiano — Italian
Units	Provides access to units of measure selection settings.	• Time format • Time offset • Bearing mode • Speed unit
Power output	Switches the Power output of the radio.	• Distant (de-fault) • Local
Sensitivity	Switches the Sensitivity of the radio.	• Low • High (default)

Menu	Description	Options
Noise cancelling (Tx)	Switches the transmission noise cancellation feature On and Off. **Note:** Menu only available on Ray63 and Ray73.	• On (default) • Off
Wireless set-up	Provides access to settings which apply to wireless devices. **Note:** Menu only available on Ray63 and Ray73 when a Wireless hub is connected.	• Wireless hub set-up • Wireless hub • Wireless speaker
Key Beep	Enables adjustment of the beep which is heard when pressing buttons.	• Off • Quiet (de-fault) • Loud

Menu	Description	Options
Channel set-up	Provides access to the Channel set-up menu.	• Channel name • 2nd priority channel • Private channels • Frequency band
GPS set-up	Provides access to the GPS set-up menu.	• Internal GPS • Homescreen display • Bearing mode • Position requests • Set manual position
DSC set-up	Provides access to the DSC set-up menu.	• MMSI • Auto channel change • Position requests
AIS	Switches the internal AIS receiver on and off on. **Note:** Menu only available on the Ray73.	• Off (default) • On

81381-3-en-US_A5_PRINT.pdf 76

5/4/2020 3:26:33 PM

Menu	Description	Options
Network output	Enables you to select the network to be used to output and receive data.	• NMEA 2000 • 0183 High speed • 0183 Std speed
ATIS set-up	Enables you to switch ATIS mode on and off and enter your ATIS ID.	• ATIS • ATIS ID
Maintenance	Enables you to view system details and functions that may be required during maintenance and troubleshooting.	• About this unit • System reset • System test

Display Set-up menu

The following menu options are available form the Display Set-up menu.

Menu	Description	Options
Backlight	Increases and decreases the LCD and button backlight level.	• 0 to 9 • Off
Shared brightness	Enables set-up of Shared Brightness.	• Shared brightness • Group
Contrast	Increases and decreases the LCD Contrast level.	• 0 to 10
Homescreen display	Determines the details displayed onscreen.	• Location & Time • Location & COG/SOG

Shared Brightness menu

The following menu options are available form the Shared Brightness menu.

Menu	Description	Options
Shared brightness	Enables and disables Shared Brightness.	• On • Off
Group	Enables you to assign the radio to a Shared Brightness group.	• Helm 1 • Helm 2 • Cockpit • Flybridge • Mast • Group 1 to Group 5

81381-3-en-US_A5_PRINT.pdf 77

5/4/2020 3:26:33 PM

Chapter 9: Hailer, Fog horn, and Intercom

Chapter contents

- 9.1 Hailer Fog Intercom menu on page 80
- 9.2 Loud hailer on page 80
- 9.3 Fog horn on page 80
- 9.4 Intercom on page 81

9.1 Hailer Fog Intercom menu

The menu options available are determined by the accessories connected to your radio.

Menu name	Connected devices
Hail/Fog/Int	Loud hailer and second station connected.
Hailer/Fog	Loud hailer connected, no second station
Intercom	Second station connected, no loud hailer

Note:

For simplicity the procedures in this section all refer to the **Hail/Fog/Int** menu.

9.2 Loud hailer

The Ray70, Ray73, Ray90 and Ray91 VHF Radios can be connected to a Loud hailer.

In hailer mode anything spoken into the handset is amplified and broadcast from the hailer. The message is not transmitted over VHF/DSC.

When the hailer is active VHF calls cannot be sent or received.

Using the hailer

From the **Hail/Fog/Int** menu: **Menu** > **Hail/Fog/Int**.

1. Select **Hailer**.

   Hailer mode is now active
2. Press and hold the **PTT** button.
3. Speak your message.
4. Release the **PTT** button.
5. Press the **Back** button to exit Hailer mode.
6. The hailer listening volume can be adjusted at any time in Listening mode using the **Volume Control**.
7. The hailer talking volume can be adjusted at any time, with the **PTT** button pressed using the **Volume Control**.

Important: To avoid audio feedback, ensure that the loud hailer is at least 3 m (9.8 ft) away from the VHF base unit and any handset or fistmic at all times. When talking, ensure that the handset or fistmic is pointing in the opposite direction to the loud hailer.

9.3 Fog horn

The fog horn function requires an optional loud hailer to be connected. Please check your product description to ensure a loud hailer can be connected.

The fog horn function can be set to manual or to predefined automatic modes.

In manual mode a continuous tone is sounded for as long as the **PTT** button is pressed.

In automatic mode the selected tone will repeat every 2 minutes until interrupted or cancelled. In automatic mode the radio can be used as normal between the fog horn patterns.

Fog mode	Description	Pattern
Underway	Vessel underway	1 long tone
Underway/ Stopped	Vessel not underway	2 long tones
Sail-ing/Fishing	sailing vessel or any vessel fishing but not trolling	1 long tone and 2 short tones
Re-strict/Tow	Restricted in ability to maneuver or towing another vessel	1 long tone and 2 short tones
Under tow	This vessel is being towed	1 long tone and 3 short tones
Pilot vessel	This vessel is a pilot vessel	4 short tones
At anchor	Vessel is at anchor	12 consecutive rings
Aground	Vessel is aground	3 short rings, 12 consecutive rings, 3 short rings

Using the fog horn in manual mode

From the **Hail/Fog/Int** menu: **Menu** > **Hail/Fog/Int**.

1. Select **Fog horn**.
2. Select **Manual mode**.
3. Press and hold the **PTT** button to sound a continuous fog horn tone.
4. Press the **Back** button to exit Fog horn mode.

Using automatic fog horn modes

From the **Hail/Fog/Int** menu: **Menu** > **Hail/Fog/Int**.

1. Select **Fog horn**.
2. Select **Automatic mode**.
3. Select an automatic pattern.

   The selected pattern will play and repeat until interrupted.
4. Select **Stop fog horn** to exit the automatic fog horn mode, or
5. Select **Change pattern** to select a different fog horn pattern.
6. To continue using the radio whilst in automatic fog horn mode select **Back** 4 times to return to the Homescreen.

   You can now continue to use the radio as normal. The fog horn pattern will continue to repeat every 2 minutes. If you are making a call when it is due to sound the fog horn will be suspended until you finish your call.

81381-3-en-US_A5_PRINT.pdf 80

5/4/2020 3:26:33 PM

Switching off Fog Horn mode

Automatic Fog Horn mode will remain active until switched off.

From the **Hail/Fog/Int** menu: **Menu** > **Hail/Fog/Int**.

1. Select **Fog horn**.
2. Select **Stop fog horn** to switch off the automatic fog horn mode

9.4 Intercom

The Intercom function is available when more than 1 station is connected to your radio.

The intercom function allows voice communication between handset stations. Calls can be initiated from either station.

Using the intercom

From the **Hail/Fog/Int** menu: **Menu** > **Hail/Fog/Int**.

1. Select **Intercom**.
2. [1]Select the handset you want to call.

   The selected handset will ring.
3. Wait for the handset station to acknowledge the call.
4. Press and hold the **PTT** button and speak your message.

Note:

[1]Step not required when only 2 handsets are connected.

Responding to the intercom

1. Press the **PTT** button and acknowledge the call and to respond to subsequent voice messages.

81381-3-en-US_A5_PRINT.pdf 81

5/4/2020 3:26:33 PM

Chapter 10: Maintenance

Chapter contents

- 10.1 Maintenance on page 84

81381-3-en-US_A5_PRINT.pdf 83 5/4/2020 3:26:33 PM

10.1 Maintenance

This product has no user serviceable parts or adjustments. Never remove the cover or attempt to service the product, doing so may invalidate your product warranty.

To following preventive measures should be followed:

- Although the product is waterproof, keep the unit as dry as possible.
- If you remove a connection ensure a dust cap is fitted to the connector.

Routine checks

The following periodic checks should be made:

- Examine cables for signs of damage, such as chafing, cuts or nicks.
- Check that the cable connectors are firmly attached and that their locking mechanisms are properly engaged.

Note: Cable checks should be carried out with the power supply switched off.

Caution: Product cleaning

When cleaning products:

- Lightly rinse or flush with clean, cool fresh water.
- If your product has a display screen, do NOT wipe the screen with a dry cloth, as this could scratch the screen coating.
- Do NOT use: abrasive, acidic, ammonia, solvent or other chemical based cleaning products.
- Do NOT use a jet wash.

Unit cleaning instructions

The unit does not require regular cleaning. However, if you find it necessary to clean the unit, please follow the steps below:

1. Ensure power is switched off.
2. Wipe unit clean with a damp cloth.
3. If necessary, use a mild detergent solution to remove grease marks.

81381-3-en-US_A5_PRINT.pdf 84

5/4/2020 3:26:33 PM

Chapter 11: Troubleshooting

Chapter contents

- 11.1 Troubleshooting on page 86
- 11.2 Power up troubleshooting on page 87
- 11.3 Audio troubleshooting (transmission / reception) on page 89
- 11.4 GNSS (GPS) troubleshooting on page 91
- 11.5 DSC troubleshooting on page 92
- 11.6 AIS troubleshooting (Ray70 / 73 / 91 only) on page 93
- 11.7 Wired handset troubleshooting on page 94
- 11.8 Wireless troubleshooting (Ray63 / 73 / 90 / 91 only) on page 95

81381-3-en-US_A5_PRINT.pdf 85

5/4/2020 3:26:33 PM

11.1 Troubleshooting

The troubleshooting information provides possible causes and corrective action required for common problems associated with installation and operation of your product.

Before packing and shipping, all Raymarine products are subjected to comprehensive testing and quality assurance programs. If you do experience problems with your product this section will help you to diagnose and correct problems in order to restore normal operation.

If after referring to this section you are still having problems with your product, please refer to the Technical support section of this manual for useful links and Raymarine Product Support contact details.

Performing a system reset

Note: Performing a reset will not reset MMSI and ATIS ID number.

From the Maintenance menu: **Menu** > **Set-up** > **Maintenance**.

1. Select **System reset**.
2. Select **Yes**.

   The system is now reset to factory defaults.

Note: Performing the reset will delete all contacts in your phonebook and reset all user options.

System test

The system test menu can be used to show the status of the system and connected devices.

The System test menu show the status of the following system components and connected devices:

- GPS
- DSC
- Battery
- Hailer
- Remote handset
- **OK** is displayed next to each item that is either connected or enabled
- **No** is displayed next to items that are either not connected or disabled.

Checking for RF interference

If you suspect a device may be causing radio frequency (RF) interference you can use your VHF radio to check.

1. Turn off the suspect device.
2. Tune your VHF radio to a quiet channel such as Channel 13.
3. Adjust your radio's Squelch control until the radio outputs audio noise.
4. Re-adjust your radio's Squelch control until the audio is quiet, only slightly above the noise threshold.
5. Turn on the suspect device.
   - If the radio's audio noise increases then the device is causing RF interference.
   - If there is no change in the radio's audio noise then the device is not causing RF interference.

Note: If RF interference is present then it is likely that both VHF and AIS reception are being degraded by the device.

Multiple antenna installations

Important additional considerations when installing multiple antennas.

To prevent potential channel interference when installing two or more VHF radios on the same vessel, ensure that the antennas are located at least 2.4 m (8 ft.) away from each other.

81381-3-en-US_A5_PRINT.pdf 86

5/4/2020 3:26:33 PM

11.2 Power up troubleshooting

Problems at power up and their possible causes and solutions are described here.

Product does not turn on or keeps turning off

Possible causes	Possible solutions
Operation	1. Ensure that the radio is fully powered on, by holding the Power button for at least 3 seconds. 2. If your system includes a handset, it has its own independent power button, located on the top edge of the handset. Press and hold the button for at least 3 seconds, until the display lights up.
Blown fuse / tripped breaker	1. Check the fuse, located inline with the power cable. Ensure that it has the correct rating (10 A), as an under-rated fuse can affect the power supplied to the radio. If the fuse has blown, replace with a new 10 A fuse. 2. Check the condition of relevant / additional fuses and breakers and connections, replace if necessary. 3. If fuse keeps blowing check for cable damage, broken connector pins or incorrect wiring.
Poor / damaged / insecure power supply cable / connections	1. Check that the power cable connector is fully inserted into the unit and locked in position. 2. Check the power supply cable and connectors for signs of damage or corrosion, replace if necessary. 3. With the unit turned on, try flexing the power cable near to the display connector to see if this causes the unit to re-boot/loose power, replace if necessary. 4. Check the vessel's battery voltage, the condition of the battery terminals and power supply cables, ensuring connections are secure, clean and free from corrosion, replace if necessary. 5. With the product under load (when transmitting at 25 W), using a multi-meter, check for a high voltage drop across all connectors /fuses etc, and replace if necessary.
Incorrect power connection	The power supply may be wired incorrectly, ensure the installation instructions have been followed.
Power source insufficient	Check that your power supply (battery or distribution panel) is providing a minimum of 10.2 V to the radio when in standby, and also when transmitting at 25W.

81381-3-en-US_A5_PRINT.pdf 87 5/4/2020 3:26:33 PM

Product will not boot up (re-boot loop)

Possible causes	Possible solutions
Power supply and connection	See possible solutions from 'Products does not turn on or keeps turning off' above.
Software corruption	In the unlikely event that the product's software has become corrupted, please try re-flashing the radio and the handsets with the latest software from the Raymarine website: www.raymarine.com/software If you have a handset in your system (Ray63 / 73 / 90 / 91 only) with old software, you might need to put it into programming mode in order to update the software along with the radio. To do this, connect it and then press and hold the **DISTRESS** and **PTT** buttons together. While holding these buttons, press the **Power** button on the handset for 3 seconds. The handset backlight will start flashing. This means that the handset is now in programming mode. Follow the update instructions provided on the software download web page.

81381-3-en-US_A5_PRINT.pdf 88 5/4/2020 3:26:33 PM

11.3 Audio troubleshooting (transmission / reception)

Problems with your VHF radio and their possible causes and solutions are described below:

No audio transmission

Possible Causes	Possible Solutions
Incorrect settings	Reset the radio to factory defaults, using the Maintenance menu: **Menu** > **Set-up** > **Maintenance** > **System reset**.
Dirt or debris blocking the microphone on the fist mic or Raymic handset.	Check the microphone on the fist mic or Raymic to ensure that the microphone port is clear and not blocked. Clean if necessary.
Incorrect channel type in use.	Ensure you are using only **Simplex** channels for testing, if communicating with another vessel. For example, channels 6, 8, 9, 10, 13, 67, 72, or 73.
Insufficient transmission power.	When communicating with vessels at a distance, ensure the radio is set to transmit at 25 W power. Press the **HI / LO** button on the fist mic or the Raymic handset and ensure that the 25 W symbol is displayed.

No audio reception

Possible Causes	Possible Solutions
Incorrect settings	Reset the radio to factory defaults, using the Maintenance menu: **Menu** > **Set-up** > **Maintenance** > **System reset**.
Incorrect channel type in use.	Ensure you are using only **Simplex** channels for testing, if communicating with another vessel. For example, channels 6, 8, 9, 10, 13, 67, 72, or 73.
Incorrect volume or squelch level.	1. Firstly, verify that noise is audible from the speakers, by setting the Squelch level to zero. To do this, press the **Vol/Sq** button a few times until **Squelch** is displayed. Then adjust the level to zero. 2. If there is no noise from the speaker, try adjusting the volume. To do this, press the **Vol/Sq** button a few times until **Volume** is displayed. Then adjust the level as required. **Note:** Volume control on each handset in the system and the radio units themselves is independent. 3. If audio / noise can be heard, press the **Vol/Sq** button a few times until **Squelch** is displayed. Then adjust the squelch level until the noise stops. 4. If no audio / noise is heard from the speaker after completing the above steps, contact Product Support for further guidance.

81381-3-en-US_A5_PRINT.pdf 89 5/4/2020 3:26:33 PM

Passive speaker troubleshooting

Passive speaker no alarm audio

Possible Causes	Possible Solutions
Passive speaker connected to second station connector.	Alarm audio is not available on passive speakers connected to the second station connector. Alarm audio should still be heard via the second station handset.

81381-3-en-US_A5_PRINT.pdf 90

5/4/2020 3:26:33 PM

11.4 GNSS (GPS) troubleshooting

Problems with the GNSS (GPS) and their possible causes and solutions are described below.

Before troubleshooting GNSS (GPS) problems, ensure your product has the latest software, by checking the Software Updates page on the Raymarine website www.raymarine.com/software

No fix

Possible causes	Possible solutions
No GNSS (GPS) receiver connected.	In order to obtain a position fix your product requires a GNSS (GPS) receiver. Your product may include an internal GNSS (GPS) receiver, if not then an external GNSS (GPS) receiver such as the RS150 is required.
No antenna connected to GNSS (GPS) receiver.	Depending on variant, your product may include an internal GNSS (GPS) receiver. The receiver may or may not include an internal antenna. If your product's internal GNSS (GPS) receiver does not include an internal antenna then you will need to connect an external passive antenna to the GNSS (GPS) / GA150 connection.
GNSS (GPS) Antenna location.	For optimum performance, external GNSS (GPS) antennas and GNSS (GPS) receivers that include an internal antenna should be mounted above decks and have a clear, unobstructed view of the sky, and not be in close proximity to any structural bulkheads or other electrical equipment or cables which may cause interference.
GNSS (GPS) switched off.	Ensure your internal GNSS (GPS) receiver is switched on in the relevant settings menu.
Geographic location or prevailing conditions preventing satellite fix.	Check periodically to see if a fix is obtained in better conditions or another geographic location.

No position data

Possible causes	Possible solutions
Internal receiver is switched off.	Ensure your external or internal receiver is switched on.
Wrong Network output selected.	Ensure the correct network type and speed is selected in the **Network output** menu: **Menu** > **Set-up** > **Network output**.
Poor / damaged / insecure cable / connection.	1. Check that the connectors are fully inserted into the unit and locked in position. 2. Check the cables and connectors for signs of damage or corrosion, replace if necessary.

81381-3-en-US_A5_PRINT.pdf 91 5/4/2020 3:26:33 PM

11.5 DSC troubleshooting

DSC functions are not available / working

Possible Causes	Possible Solutions
MMSI number not programmed.	Programme your MMSI number. Each VHF radio requires a unique MMSI number. In the United States, this MUST be programmed into the unit by an authorized dealer. For more information, refer to: **Obtain MMSI (Maritime Mobile Service Identity) number**
Radio is set to ATIS or Marcom-C mode.	Use of DSC is not permitted when in ATIS or Marcom-C mode. You will be unable to make DSC distress and other types of digital selective call. If you are not in an ATIS region switch off ATIS mode: **Menu** > **Set-up** > **ATIS set-up** > **ATIS**.

Obtain MMSI (Maritime Mobile Service Identity) number

Before commencing installation ensure you have obtained an MMSI number for your vessel.

An MMSI is a 9 digit number which is sent over a radio frequency channel in order to identify the originating vessel/station. If your vessel already has an MMSI number (used for a VHF DSC radio) then the same MMSI number must be used to program your product.

Note:

If an MMSI number is not entered, the DSC functionality of your radio will be disabled.

In the United States of America, the MMSI and Static Data must be entered only by a Raymarine® dealer or other appropriately qualified installer of marine communications equipment on board vessels.
The user is NOT authorized to do this.

In some areas, a radio operator licence is required before an MMSI number will be issued. You can request an MMSI number from same agency that issues radio or Ship Radio licences in your area.

In Europe and other parts of the world outside of the United States of America, the MMSI and Static data can be set up by the user.

For further details, refer to the relevant Telecommunications Regulatory Body for your area.

Refer to Appendix C **MMSI Regulatory bodies and application submissions**

for a list of contacts for obtaining MMSI numbers for some areas.

81381-3-en-US_A5_PRINT.pdf 92 5/4/2020 3:26:33 PM

11.6 AIS troubleshooting (Ray70 / 73 / 91 only)

AIS functions are not available / working (Ray70 / Ray73 / Ray91 only)

Possible Causes	Possible Solutions
MMSI number not programmed.	Programme your MMSI number. Each VHF radio requires a unique MMSI number. In the United States, this MUST be programmed into the unit by an authorized dealer. For more information, refer to: **Obtain MMSI (Maritime Mobile Service Identity) number**
VHF radio is not connected to a multifunction display via SeaTalkng / NMEA, or the connection is not correctly configured.	Check the diagnostics on the multifunction display to confirm that the VHF radio is connected on the network. Access the VHF radio's **Set-up** menu and ensure that the **Network output** option is set correctly. If the VHF radio is connected to an MFD via NMEA 0183, ensure that the VHF radio's **Network output** option in the Set-up menu is set to "0183 High Speed". Ensure also that the MFD's NMEA 0183 connection is configured to 38400 baud rate.
AIS functions are not enabled on the VHF radio.	Access the VHF radio's **Set-up** menu and ensure that the **AIS** option is set to "On".
AIS functions are not enabled on the MFD.	Ensure that both **AIS Presentation** and **AIS Targets** are enabled for the MFD. For instructions on how to do this, refer to the Operation instructions for your MFD.

81381-3-en-US_A5_PRINT.pdf 93 5/4/2020 3:26:33 PM

11.7 Wired handset troubleshooting

Wired handset will not power up

Possible causes	Possible solutions
Handset not turned on	The Wired handset is supplied power from the Base station. Press the Power button located on the top of the Handset to power it on. If you have a handset in your system with old software, you might need to put it into programming mode in order to update the software along with the radio. To do this, connect it and then press and hold the **DISTRESS** and **PTT** buttons together. While holding these buttons, press the **Power** button on the handset for 3 seconds. The handset backlight will start flashing. This means that the handset is now in programming mode. Follow the update instructions provided on the software download web page.
Software Base station / Handset mismatch	The Handset and Base station must both be running compatible software, refer to the Raymarine website for details of compatible software versions: www.raymarine.com/software.
Poor / damaged / insecure cables / connections	1. Check that the Base station radio is correctly powered. 2. With the Handset turned on, try flexing the cable near to the connectors to see if this causes the Handset to re-boot/loose power, replace if necessary. 3. Check cable connections are secure, clean and free from corrosion, replace if necessary.

Handset display problems

Possible Causes	Possible Solutions
Handset is not powered on	Hold down the **Power** button located on the top edge of the handset, until the display backlight comes on.
Incompatible software	The handset software may need updating, or there may be a mismatch between the handset and basestation software versions. To update the software, visit www.raymarine.com/software and download the latest software. Ensure the VHF radio is connected via SeaTalkng to a Raymarine multifunction display (MFD), and then follow the instuctions provided on the software download website. (The VHF radio software can only be updated via a Raymarine MFD).

81381-3-en-US_A5_PRINT.pdf 94 5/4/2020 3:26:33 PM

11.8 Wireless troubleshooting (Ray63 / 73 / 90 / 91 only)

Before troubleshooting problems with your wireless connection, ensure that you have followed the Wireless location requirements guidance provided in the relevant installation instructions and performed a power cycle/reboot of the devices you are experiencing problems with.

Wireless handset not powering up

Possible cause	Possible solutions
Wireless handset's battery is not charged.	1. Ensure the handset's charging holster is correctly connected to a 12 V dc power supply. 2. Place the handset in the charging holster. 3. Ensure the battery symbol is displayed on the handset screen. **Note:** When charging a very low or completely flat battery, it might take some time for the display to light up once placed in the cradle and charging.

Cannot find network

Possible cause	Possible solutions
Devices not powered or connected.	Ensure the Wireless hub is connected to the Hub connection on the Base station and that the Base station is powered on.
Devices out of range or signal being blocked.	Move devices closer together or, if possible remove the obstructions and then re-scan available networks.
Software mismatch on radio / wireless hub / wireless handset.	The radio, wireless hub, and wireless handset must all be running compatible software. If the software on the radio and handsets is up to date, the wireless hub will update automatically. To obtain information on compatible software versions and also to obtain the latest software, visit the Raymarine website: www.raymarine.com/software

Cannot connect to hub

Possible cause	Possible solutions
Trying to connect to the wrong device.	Ensure you are trying to connect to the correct device; you can find your Wireless hub's name using a Wired handset: (**Menu** > **Set-up** > **Wireless set-up** > **Wireless hub set-up** > **Hub name**).
Incorrect password.	Ensure you are trying to connect using the correct password; you can find your Wireless hub's password using a Wired handset: (**Menu** > **Set-up** > **Wireless set-up** > **Wireless hub set-up** > **Password**).
Bulkheads, decks and other heavy structure can degrade and even block the wireless signal. Depending on the material and its thickness, it may not always be possible to pass a wireless signal through certain structures.	1. Try repositioning the Wireless hub so that heavy structure is removed from the direct line-of-sight between the devices, or: 2. Use the Wireless hub antenna extension accessory (A80541) to move the wireless hub to an area with fewer obstacles.

81381-3-en-US_A5_PRINT.pdf 95 5/4/2020 3:26:33 PM

Connection extremely slow and or keeps dropping out

Possible cause	Possible solutions
Wireless performance degrades over distance, so products farther away will receive less network bandwidth. Products installed close to their maximum wireless range will experience slow connection speeds, signal drop outs or no connection at all.	Move devices closer together.
Interference being caused by other wireless-enabled devices.	1. Change the hub's wireless channel and retry the connection. You can use free wireless analyzer apps on your smartphone or tablet to help you choose a less-congested channel. 2. Switch off each wireless device in turn until you have identified the device causing the interference.

Possible cause	Possible solutions
Interference caused by other devices that use the 2.4GHz frequency See list below of some common devices that use the 2.4GHz frequency: • Microwave ovens • Fluorescent lighting • Cordless phones / baby monitors • Motion sensors	Switch off each device in turn until you have identified the device causing the interference, then remove or reposition the offending device(s) or your wireless hub / handset..
Interference caused by electrical and electronic devices and associated cabling could generate an electromagnetic field which may interfere with the wireless signal.	Switch off each item in turn until you have identified the device causing the interference, then remove or reposition the offending device(s) or your wireless hub / handset.
Interference from devices on other vessels. When in close proximity to other vessels, many other wireless signals may be present; for example, when moored up in a marina.	1. Change the hub's wireless channel and retry the connection. You can use free wireless analyzer apps on your smartphone or tablet to help you choose a less congested channel. 2. If possible, move your vessel to a location with less wireless traffic.

Network connection established but no data

Possible cause	Possible solutions
Connected to the wrong network.	Ensure that your handset is connected to the correct wireless hub.
Device software incompatibility.	The radio, wireless hub, and wireless handset must all be running compatible software. If the software on the radio and handsets is up to date, the wireless hub will update automatically. You can check device software from the Maintenance menu: **Menu > Set-up > Maintenance > About this unit**. To obtain information on compatible software versions and also to obtain the latest software, visit the Raymarine website: www.raymarine.com/software
It may be possible that the device has become defective.	1. Try updating software to a later version, or try reinstalling the current software. 2. Contact technical support for further assistance.

81381-3-en-US_A5_PRINT.pdf 96

5/4/2020 3:26:33 PM

LED diagnostics - Wireless (Active) speaker

Sequence	Color	Status
x 3	Purple	Powering on
	Red and Blue	Ready to pair/connect
x 10	Red	Paired ok
5 seconds x 2	Red	Connected, no audio
5 seconds x 1	Purple	Connected, audio active
5 seconds x 1	Red	Powered on, not connected

81381-3-en-US_A5_PRINT.pdf 97

5/4/2020 3:26:33 PM

Chapter 12: Technical support

Chapter contents

- 12.1 Raymarine product support and servicing on page 100
- 12.2 Viewing product information on page 100
- 12.3 Learning resources on page 101

12.1 Raymarine product support and servicing

Raymarine provides a comprehensive product support service, as well as warranty, service, and repairs. You can access these services through the Raymarine website, telephone, and e-mail.

Product information

If you need to request service or support, please have the following information to hand:

- Product name.
- Product identity.
- Serial number.
- Software application version.
- System diagrams.

You can obtain this product information using diagnostic pages of the connected MFD.

Servicing and warranty

Raymarine offers dedicated service departments for warranty, service, and repairs.

Don't forget to visit the Raymarine website to register your product for extended warranty benefits: http://www.raymarine.co.uk/display/?id=788.

Region	Contact
United Kingdom (UK), EMEA, and Asia Pacific	• E-Mail: emea.service@raymarine.com • Tel: +44 (0)1329 246 932
United States (US)	• E-Mail: rm-usrepair@flir.com • Tel: +1 (603) 324 7900

Web support

Please visit the "Support" area of the Raymarine website for:

- **Manuals and Documents** — http://www.raymarine.com/manuals
- **Technical support forum** — http://forum.raymarine.com
- **Software updates** — http://www.raymarine.com/software

Worldwide support

Region	Contact
United Kingdom (UK), EMEA, and Asia Pacific	• E-Mail: support.uk@raymarine.com • Tel: +44 (0)1329 246 777
United States (US)	• E-Mail: support@raymarine.com • Tel: +1 (603) 324 7900 (Toll-free: +800 539 5539)
Australia and New Zealand (Raymarine subsidiary)	• E-Mail: aus.support@raymarine.com • Tel: +61 2 8977 0300
France (Raymarine subsidiary)	• E-Mail: support.fr@raymarine.com • Tel: +33 (0)1 46 49 72 30
Germany (Raymarine subsidiary)	• E-Mail: support.de@raymarine.com • Tel: +49 (0)40 237 808 0
Italy (Raymarine subsidiary)	• E-Mail: support.it@raymarine.com • Tel: +39 02 9945 1001
Spain (Authorized Raymarine distributor)	• E-Mail: sat@azimut.es • Tel: +34 96 2965 102
Netherlands (Raymarine subsidiary)	• E-Mail: support.nl@raymarine.com • Tel: +31 (0)26 3614 905
Sweden (Raymarine subsidiary)	• E-Mail: support.se@raymarine.com • Tel: +46 (0)317 633 670
Finland (Raymarine subsidiary)	• E-Mail: support.fi@raymarine.com • Tel: +358 (0)207 619 937
Norway (Raymarine subsidiary)	• E-Mail: support.no@raymarine.com • Tel: +47 692 64 600
Denmark (Raymarine subsidiary)	• E-Mail: support.dk@raymarine.com • Tel: +45 437 164 64
Russia (Authorized Raymarine distributor)	• E-Mail: info@mikstmarine.ru • Tel: +7 495 788 0508

12.2 Viewing product information

Product information can be found on the Startup screen.

1. Power up the radio.

   The startup screen is displayed which shows the model and software version of the product.

Alternatively product information can also be displayed by selecting **About this unit** from the **Maintenance** menu: **Menu** > **Set-up** > **Maintenance**.

81381-3-en-US_A5_PRINT.pdf 100

5/4/2020 3:26:33 PM

12.3 Learning resources

Raymarine has produced a range of learning resources to help you get the most out of your products.

Video tutorials

YouTube	Raymarine official channel on YouTube: • YouTube LightHouse™ 3 tips and tricks: • Raymarine website
	Video Gallery: • Raymarine website

Note:

- Viewing the videos requires a device with an Internet connection.
- Some videos are only available in English.

Training courses

Raymarine regularly runs a range of in-depth training courses to help you make the most of your products. Visit the Training section of the Raymarine website for more information:

- http://www.raymarine.co.uk/view/?id=2372

Technical support forum

You can use the Technical support forum to ask a technical question about a Raymarine product or to find out how other customers are using their Raymarine equipment. The resource is regularly updated with contributions from Raymarine customers and staff:

- http://forum.raymarine.com

81381-3-en-US_A5_PRINT.pdf 101

5/4/2020 3:26:33 PM

Chapter 13: Technical specification

Chapter contents

- 13.1 Technical specification — Ray53 on page 104
- 13.2 Technical specification — Ray63 on page 105
- 13.3 Technical specification — Ray73 on page 106
- 13.4 Technical specification — Wired handset (Raymic) on page 107
- 13.5 Technical specification - Wired (Passive) speaker on page 108
- 13.6 Technical specification - Wireless hub on page 108
- 13.7 Technical specification - Wireless handset on page 108
- 13.8 Technical specification - Wireless handset charging holster on page 108
- 13.9 Technical specification - Wireless (Active) speaker on page 109

13.1 Technical specification — Ray53

Environmental specification

Operating temperature	-20°C (-4°F) to +60°C (140°F)
Storage temperature	-25°C (-13°F) to +70°C (158°F)
Relative humidity	95%
Water proofing	IPx6 & IPx7
Connections	• 1 x NMEA 0183 • 1 x SeaTalkng ® / NMEA 2000 • 1 x Audio (RCA) • 1 x GNSS (GPS) antenna (TNC)

Power specification

Nominal supply voltage	12 V dc (Reverse polarity and over voltage protection)
Operating voltage range	9 V dc to 16 V dc
Current consumption	• Less than 6 A at high power (13.6 V) • Standby: 600 mA • Receive: 2 A

Transmitter

Channels	All available US, International and Canadian VHF marine bands
Frequency Range	156.000 MHz to 157.425 MHz / 155.500 MHz to 161.425 MHz (Private channels)
Frequency stability	+/- 1.5 ppm
Channel Spacing	25 kHz
Power Output	• Low power setting — 0 . 7 5 W • High power setting — 25 W
Spurious emissions	Better than –36 dBm at 25 W (Less than 0.25 µW)
Maximum deviation	+/- 5 kHz
Antenna impedance	50 Ohms (typical)

Receiver

Receiver type	Double conversion super heterodyne
Channels	All available US, International and Canadian VHF marine bands
Frequency range	156.050 MHz to 163.275 MHz / 155.500 MHz to 161.425 MHz (Private channels)
Sensitivity	Better than 1 microvolt EMF @ 20dB SINAD
Squelch sensitivity	Less than —2 dBµ EMF
Hum and noise	Better than –40 dB
Audio distortion	Less than 10%
Receiver sensitivity	• Distance — 119dBm (0.25uV) @ 12dB SINAD (typical) • Local — 110dBm (0.7uV) @ 12dB SINAD (typical)
Adjacent channel selectivity	More than 70 dB
Spurious response rejection	More than 70 dB
Inter modulation rejection	More than 68 dB

Speakers

Base station speaker power output	2.5 W (8 Ω)
Fistmic speaker power	1 W (16 Ω)
External speaker power	5 W (8 Ω)

GNSS (GPS)

Channels	72
Cold start	< 2 minutes
Receiver IC Sensitivity	–167 dBm (Tracking) / –148 dBm (Acquisition)
GNSS compatibility	• GPS • GLONASS • * Beidou
SBAS compatibility	• WAAS • EGNOS • MSAS
Special features	Active Jamming and Interference Reduction
Operating frequency	• GPS L1 C/A • GLONASS L10F • Beidou B1

81381-3-en-US_A5_PRINT.pdf 104 5/4/2020 3:26:33 PM

Signal Acquisition	Automatic
Almanac Update	Automatic
Geodetic Datum	WGS-84 (alternatives available through Raymarine MFD)
Refresh Rate	10 Hz (10 times per second Concurrent GNSS)
Antenna	• Internal — Ceramic chip mounted near top of unit • External — Passive antenna connection via TNC connector
Position Accuracy	• Without SBAS: <= 15 metres 95% of the time • With SBAS: <= 5 metres 95% of the time

13.2 Technical specification — Ray63

Environmental specification

Operating temperature	-20°C (-4°F) to +60°C (140°F)
Storage temperature	-25°C (-13°F) to +70°C (158°F)
Relative humidity	95%
Water proofing	IPx6 & IPx7
Connections	• 1 x NMEA 0183 • 1 x SeaTalkng ® / NMEA 2000 • 1 x Front Fistmic connection • 1 x Rear connection for 2nd station • 1 x Audio (RCA) • 1 x GNSS (GPS) antenna (TNC)

Power specification

Nominal supply voltage	12 V dc (Reverse polarity and over voltage protection)
Operating voltage range	9 V dc to 16 V dc
Current consumption	• Less than 6 A at high power (13.6 V) • Standby: 600 mA • Receive: 2 A

Transmitter

Channels	All available US, International and Canadian VHF marine bands
Frequency Range	156.000 MHz to 157.425 MHz / 155.500 MHz to 161.425 MHz (Private channels)
Frequency stability	+/- 1.5 ppm
Channel Spacing	25 kHz
Power Output	•Low power setting — 0 . 7 5 W • High power setting — 25 W
Spurious emissions	Better than –36 dBm at 25 W (Less than 0.25 µW)
Maximum deviation	+/- 5 kHz
Antenna impedance	50 Ohms (typical)

Receiver

Receiver type	Double conversion super heterodyne
Channels	All available US, International and Canadian VHF marine bands
Frequency range	156.050 MHz to 163.275 MHz / 155.500 MHz to 161.425 MHz (Private channels)
Sensitivity	Better than 1 microvolt EMF @ 20dB SINAD
Squelch sensitivity	Less than —2 dBµ EMF
Hum and noise	Better than –40 dB
Audio distortion	Less than 10%
Receiver sensitivity	• Distance — 119dBm (0.25uV) @ 12dB SINAD (typical) • Local — 110dBm (0.7uV) @ 12dB SINAD (typical)
Adjacent channel selectivity	More than 70 dB
Spurious response rejection	More than 70 dB
Inter modulation rejection	More than 68 dB

81381-3-en-US_A5_PRINT.pdf 105 5/4/2020 3:26:33 PM

Speakers

Base station speaker power output	2.5 W (8 Ω)
Fistmic speaker power output	1 W (16 Ω)
External speaker power output	5 W (8 Ω)
Handset speaker power output	1 W (16 Ω)

GNSS (GPS)

Channels	72
Cold start	< 2 minutes
Receiver IC Sensitivity	–167 dBm (Tracking) / –148 dBm (Acquisition)
GNSS compatibility	• GPS • GLONASS • * Beidou
SBAS compatibility	• WAAS • EGNOS • MSAS
Special features	Active Jamming and Interference Reduction
Operating frequency	• GPS L1 C/A • GLONASS L10F • Beidou B1
Signal Acquisition	Automatic
Almanac Update	Automatic
Geodetic Datum	WGS-84 (alternatives available through Raymarine MFD)
Refresh Rate	10 Hz (10 times per second Concurrent GNSS)
Antenna	• Internal — Ceramic chip mounted near top of unit • External — Passive antenna connection via TNC connector
Position Accuracy	• Without SBAS: <= 15 metres 95% of the time • With SBAS: <= 5 metres 95% of the time

13.3 Technical specification — Ray73

Environmental specification

Operating temperature	-20°C (-4°F) to +60°C (140°F)
Storage temperature	-25°C (-13°F) to +70°C (158°F)
Relative humidity	95%
Water proofing	IPx6 & IPx7
Connections	• 1 x NMEA 0183 • 1 x SeaTalkng ® / NMEA 2000 • 1 x Front Fistmic connection • 1 x Rear connection for 2nd station • 1 x Audio (RCA) • 1 x Loud Hailer connection wires • 1 x GNSS (GPS) antenna (TNC)

Power specification

Nominal supply voltage	12 V dc (Reverse polarity and over voltage protection)
Operating voltage range	9 V dc to 16 V dc
Current consumption	• Less than 6 A at high power (13.6 V) • Standby: 600 mA • Receive: 2 A • Loud hailer: 3 A (8 Ω) / 6 A (4 Ω)

Transmitter

Channels	All available US, International and Canadian VHF marine bands
Frequency Range	156.000 MHz to 157.425 MHz / 155.500 MHz to 161.425 MHz (Private channels)
Frequency stability	+/- 1.5 ppm
Channel Spacing	25 kHz

81381-3-en-US_A5_PRINT.pdf 106 5/4/2020 3:26:33 PM

Power Output	• Low power setting — 0 . 7 5 W • High power setting — 25 W
Spurious emissions	Better than –36 dBm at 25 W (Less than 0.25 µW)
Maximum deviation	+/- 5 kHz
Antenna impedance	50 Ohms (typical)

Receiver

Receiver type	Double conversion super heterodyne
Channels	All available US, International and Canadian VHF marine bands
Frequency range	156.050 MHz to 163.275 MHz / 155.500 MHz to 161.425 MHz (Private channels)
Sensitivity	Better than 1 microvolt EMF @ 20dB SINAD
Squelch sensitivity	Less than —2 dBµ EMF
Hum and noise	Better than –40 dB
Audio distortion	Less than 10%
Receiver sensitivity	• Distance — 119dBm (0.25uV) @ 12dB SINAD (typical) • Local — 110dBm (0.7uV) @ 12dB SINAD (typical)
Adjacent channel selectivity	More than 70 dB
Spurious response rejection	More than 70 dB
Inter modulation rejection	More than 68 dB

Speakers

Base station speaker power output	2.5 W (8 Ω)
Fistmic speaker power output	1 W (16 Ω)
External speaker power output	5 W (8 Ω)
Handset speaker power output	1 W (16 Ω)
Hailer speaker power output	25 W (4 Ω) / 12 W (8 Ω)

AIS

Class type	AIS receiver only

GPS

Channels	72
Cold start	< 2 minutes
Receiver IC Sensitivity	–167 dBm (Tracking) / –148 dBm (Acquisition)
GNSS compatibility	• GPS • GLONASS • * Beidou
SBAS compatibility	• WAAS • EGNOS • MSAS
Special features	Active Jamming and Interference Reduction
Operating frequency	• GPS L1 C/A • GLONASS L10F • Beidou B1
Signal Acquisition	Automatic
Almanac Update	Automatic
Geodetic Datum	WGS-84 (alternatives available through Raymarine MFD)
Refresh Rate	10 Hz (10 times per second Concurrent GNSS)
Antenna	• Internal — Ceramic chip mounted near top of unit • External — Passive antenna connection via TNC connector
Position Accuracy	• Without SBAS: <= 15 metres 95% of the time • With SBAS: <= 5 metres 95% of the time

13.4 Technical specification — Wired handset (Raymic)

The following technical specifications apply to the Wired handset.

Operating temperature	-25°C (-13°F) to +55°C (131°F)
Storage temperature	-25°C (-13°F) to +70°C (158°F)
Relative humidity	95%
Water proofing	IPx6 & IPx7

81381-3-en-US_A5_PRINT.pdf 107

5/4/2020 3:26:33 PM

Max speaker power output	1 W (16 Ω)
VHF radio compatibility	• Ray90 / Ray91 • Ray63 / Ray73 • Ray60 / Ray70

13.5 Technical specification - Wired (Passive) speaker

Operating temperature	-25°C (-13°F) to +55°C (131°F)
Storage temperature	-25°C (-13°F) to +70°C (158°F)
Relative humidity	95%
Water proofing	IPx6 & IPx7
Max speaker power output	5 W (8 Ω)
Connection	RCA female connector, connects to Wired handset via adaptor cable (A80297)
VHF radio compatibility	• Ray90 / Ray91 • Ray53 / Ray63 / Ray73 • Ray50 /Ray52 / Ray60 / Ray70

13.6 Technical specification - Wireless hub

The following technical specification applies to the Wireless hub accessory.

Operating temperature	-25°C (-13°F) to +55°C (131°F)
Storage temperature	-25°C (-13°F) to +70°C (158°F)
Relative humidity	95%
Water proofing	IPx6 & IPx7
Wireless frequency	2.4 GHz
Connections	• Connects to Base station via 12 pin connector. • Connects wireless handsets via 2.4GHz wireless connection.
VHF radio compatibility	• Ray90 / Ray91 • Ray63 • Ray73

13.7 Technical specification - Wireless handset

Wireless handset

Operating temperature	-25°C (-13°F) to +55°C (131°F)
Storage temperature	-25°C (-13°F) to +70°C (158°F)
Relative humidity	95%
Water proofing	IPx6 & IPx7
Max speaker power output	1 W (16 Ω)
Wireless frequency	2.4 GHz
Connections	• x 1 Wireless hub connection via 2.4GHz wireless connection • x 1 Wireless (Active) speaker via 2.4GHz wireless connection
VHF radio compatibility	• Ray90 / Ray91 • Ray63 / Ray73

Battery

Battery type	Rechargeable Lithium ion
Replaceable	No
Capacity	2000 mAh
Talk time	8 hours
Standby	100 hours
Charge time	5 hours

13.8 Technical specification - Wireless handset charging holster

Power specification

Nominal supply voltage	12 V dc (with over voltage protection)
Operating voltage range	10.2 V dc to 16 V dc

81381-3-en-US_A5_PRINT.pdf 108 5/4/2020 3:26:33 PM

Fuse requirements	• Inline fuse = 2 A • Thermal breaker = 2 A
Current consumption	1 A nominal
Charge type	Wireless inductive charging
Power output	1 A

Environmental specification

Operating temperature	-25°C (-13°F) to +55°C (131°F)
Storage temperature	-25°C (-13°F) to +70°C (158°F)
Relative humidity	95%
Water proofing	IPx6 & IPx7

13.9 Technical specification - Wireless (Active) speaker

Power specification

Nominal supply voltage	12 V dc (with over voltage protection)
Operating voltage range	10.2 V dc to 16 V dc
Fuse requirements	• Inline fuse = 2 A • Thermal breaker = 2 A
Current consumption	1 A nominal
Max speaker power output	5 W (8 Ω)

Environmental specification

Operating temperature	-25°C (-13°F) to +55°C (131°F)
Storage temperature	-25°C (-13°F) to +70°C (158°F)
Relative humidity	95%
Water proofing	IPx6 & IPx7

Connections

Connection	x 1 Wireless handset connection via 2.4GHz Wireless connection
VHF radio compatibility (via wireless hub)	• Ray90 / Ray91 • Ray63 / Ray73

81381-3-en-US_A5_PRINT.pdf 109

5/4/2020 3:26:33 PM

Chapter 14: Spares and accessories

Chapter contents

- 14.1 Accessories on page 112
- 14.2 Ray53 / Ray63 / Ray73 spares on page 112
- 14.3 SeaTalkng ® cables and accessories on page 112

14.1 Accessories

The following accessories are available;

Base station accessories

Part number	Description
A80288	Passive GNSS (GPS) antenna
M95435	Loud hailer / Fog horn

Wired handset station accessories

Part number	Description
A80542	Wired passive speaker
A80289	Wired handset including mounting holster
A80291	Wired handset extension cable 5 m (16.4 ft)
A80292	Wired handset extension cable 10 m (32.8 ft)
A80290	Wired handset extension cable 15 m (49.2 ft)
A80297	Wired handset adaptor cable with male RCA audio (400 mm 1.3 ft)

Wireless handset station accessories

Part number	Description
A80540	Wireless hub
A80541	Wireless hub antenna extension 5m (16.4 ft)
A80543	Wireless active speaker
A80544	Wireless handset including charging holster
R70739	Wireless hub adaptor for Ray63/Ray73

14.2 Ray53 / Ray63 / Ray73 spares

The following spares are available:

R70616	Wireless handset
R70617	Wireless handset charging holster
R70618	Volume knob for the wireless active speaker
R70619	Bezel for passive and active speaker
R70492	Wired handset holster
R70438	Panel mount fixing kit
R70484	Handset hook plate (mounting clip)
R70432	Volume/Squelch control knob and OK knob (Chrome)
R70737	Volume/Squelch control knob and OK knob (Black)
R70620	Black bezel (Ray63 / Ray73)
A80620	Suncover (Ray63 / Ray73)
R70689	Wireless hub antenna

14.3 SeaTalkng ® cables and accessories

SeaTalkng ® cables and accessories for use with compatible products.

Part No	Description	Notes
T70134	Starter kit	Includes: • 1 x 5 Way connector (A06064) • 2 x Backbone terminator (A06031) • 1 x 3 m (9.8 ft) spur cable (A06040) • 1 x Power cable (A06049)
A25062	Backbone Kit	Includes: • 2 x 5 m (16.4 ft) Backbone cable (A06036) • 1 x 20 m (65.6 ft) Backbone cable (A06037) • 4 x T-piece (A06028) • 2 x Backbone terminator (A06031) • 1 x Power cable (A06049)
A06038	Spur cable 0.4 m (1.3 ft)	
A06039	Spur cable 1 m (3.3 ft)	
A06040	Spur cable 3 m (9.8 ft)	

81381-3-en-US_A5_PRINT.pdf 112

5/4/2020 3:26:33 PM

Part No	Description	Notes
A06041	Spur cable 5 m (16.4 ft)	
A06042	Elbow spur cable 0.4 m (1.3 ft)	
A06033	Backbone cable 0.4 m (1.3 ft)	
A06034	Backbone cable 1 m (3.3 ft)	
A06035	Backbone cable 3 m (9.8 ft)	
A06036	Backbone cable 5 m (16.4 ft)	
A06068	Backbone cable 9 m (29.5 ft)	
A06037	Backbone cable 20 m (65.6 ft)	
A06043	SeaTalkng ® to bare wire spur cable 1 m (3.3 ft)	
A06044	SeaTalkng ® to bare wire spur cable 3 m (9.8 ft)	
A06049	Power cable 1 m (3.3 ft)	
A06077	Right angled connector	90° right angle spur connector.

Part No	Description	Notes
A06031	Terminator	
A06028	T-piece	Provides 1 x spur connection
A06064	5–way connector block	Provides 3 x spur connections
A06030	Backbone extender	
E22158	SeaTalk to SeaTalkng ® converter kit	Allows the connection of SeaTalk devices to a SeaTalkng ® system.
A80001	Inline terminator	Provides direct connection of a spur cable to the end of a backbone cable. No T-piece required.
A06032	Spur blanking plug	
R12112	ACU / SPX SeaTalkng ® spur cable 0.3 m (1.0 ft)	Connects an SPX course computer or an ACU to a SeaTalkng ® backbone.
A06047	SeaTalk (3 pin) to SeaTalkng ® adaptor cable 0.4 m (1.3 ft)	
A22164	SeaTalk to SeaTalkng ® spur cable 1 m (3.3 ft)	
A06048	SeaTalk2 (5 pin) to SeaTalkng ® adaptor cable 0.4 m (1.3 ft)	

Part No	Description	Notes
A06045	SeaTalkng ® to DeviceNet (Female) adaptor cable 0.4 m (1.3 ft)	Allows the connection of NMEA 2000 devices to a SeaTalkng ® system.
A06075	SeaTalkng ® to DeviceNet (Female) adaptor cable 1 m (3.3 ft)	Allows the connection of NMEA 2000 devices to a SeaTalkng ® system.
A06046	SeaTalkng ® to DeviceNet (Male) adaptor cable 1.5 m (4.92 ft)	Allows the connection of NMEA 2000 devices to a SeaTalkng ® system.
A06076	SeaTalkng ® to DeviceNet (Male) adaptor cable 1 m (3.3 ft)	Allows the connection of NMEA 2000 devices to a SeaTalkng ® system.
A06078	SeaTalkng ® to DeviceNet (Male) adaptor cable 0.1 m (0.33 ft)	Allows the connection of NMEA 2000 devices to a SeaTalkng ® system.
E05026	DeviceNet (Female) to bare wires adaptor cable (0.4 m (1.3 ft)	Allows the connection of NMEA 2000 devices to a SeaTalkng ® system.
E05027	DeviceNet (Male) to bare wires adaptor cable (0.4 m (1.3 ft)	Allows the connection of NMEA 2000 devices to a SeaTalkng ® system.

Appendix A NMEA 0183 sentences

The radio supports the following **NMEA 0183** sentences.

Sentence	Description	Ray50 / Ray52 / Ray60		Ray70	
		Receive	Transmit	Receive	Transmit
DSC	Digital Selective Calling		●		●
DSE	Expanded Digital Selective Calling		●		●
VDM	AIS VHF Data Link Message				●
GGA	Global Positioning System Fix Data	●		●	
GLL	Geographic Position — Lat/Long	●		●	
GNS	GNSS Fix Data	●		●	
RMA	Recommended Minimum Specific Loran-C Data	●		●	
RMC	Recommended Minimum Specific GNSS Data	●		●	
DTM	Datum	●		●	

81381-3-en-US_A5_PRINT.pdf 115 5/4/2020 3:26:34 PM

Appendix B NMEA 2000 PGN list

The radio supports the following **NMEA 2000** PGNs. These are applicable to **NMEA 2000** and **SeaTalkng**® protocols.

		Ray53 / Ray63		Ray73	
PGN	**Description**	**Receive**	**Transmit**	**Receive**	**Transmit**
59392	ISO Request	●	●	●	●
59904	ISO Acknowledgement	●	●	●	●
60416	Transport Protocol (group function BMA)	●		●	
60928	ISO Address Claim	●	●	●	●
65240	ISO Commanded Address		●		●
65396	AIS Transmitter Status				●
126208	NMEA — Request Group Function	●		●	
126208	NMEA — Command Group Function	●		●	
126208	NMEA — Acknowledge Group Function		●		●
126464	PGN List		●		●
126992	System Time	●	●	●	●
126993	Heartbeat		●		●
126996	Product Information		●		●
127258	Magnetic variation	●		●	
129025	Position Rapid Update	●	●	●	●
129026	COG / SOG Rapid Update	●	●	●	●
129029	GNSS Position Data	●	●	●	●
129033	Local Time Offset	●	●	●	●
129038	AIS Class A Position Report				●
129039	AIS Class B Position Report				●

81381-3-en-US_A5_PRINT.pdf 116 5/4/2020 3:26:34 PM

PGN	Description	Ray53 / Ray63		Ray73	
		Receive	Transmit	Receive	Transmit
129040	AIS Class B Extended Position Report				●
129041	AIS Aids to Navigation (AtONs)				●
129044	Datum	●	●	●	●
129540	GNSS Satellites in View	●	●	●	●
129542	GNSS Pseudo Range Noise Statistics	●	●	●	●
129547	GNSS Pseudo Range Error Statistics	●	●	●	●
129793	AIS UTC and Date Report				●
129794	AIS Class A Static and Voyage Related data				●
129797	AIS Binary Broadcast		●		●
129798	AIS SAR Aircraft Position Report				●
129801	AIS Addressed Safety Related Message				●
129802	AIS Safety Related Broadcast Message				●
129808	DSC Call Information		●		●
129809	AIS Class B “CS” Static Data Report, Part A				●
129810	AIS Class B “CS” Static Data Report, Part B				●

81381-3-en-US_A5_PRINT.pdf 117 5/4/2020 3:26:34 PM

Appendix C MMSI Regulatory bodies and application submissions

Country	Regulatory Body	Website links
UK	Ofcom	http://www.ofcom.org.uk
USA	FCC (www.fcc.gov)	• www.boatus.com • www.seatow.com • www.usps4mmsi.com
Canada	Industry Canada	www.ic.gc.ca
Australia	Australian Maritime Safety Authority (AMSA)	http://www.amsa.gov.au/mmsi/
Holland	Agentschap Telecom	www.agentschaptelecom.nl
Belgium	Belgisch Instituut voor Postdiensten en Telecommunicatie	www.bipt.be
Germany	Bundesnetzagentur	https://www.bundesnetzagentur.de/DE/Sachgebiete/Telekommunikation/Unternehmen_Institutionen/Frequenzen/SpezielleAnwendungen/Seefunk/Seefunk-node.html
Denmark	søfartsstyrelsen	www.soefartsstyrelsen.dk
France	Agence Nationale Des Fréquences	https://www.anfr.fr/licences -et-autorisations/radiomaritime/
Italy	Ministero dello sviluppo economico - Direzione generale per le attività territoriali	http://www.sviluppoeconomico.gov.it/images/stories/documenti/mmsinew.pdf
Spain	Ministero De Fomento	https://www.fomento.gob.es/MFOM/LANG_CASTELLANO/DIRECCIONES_GENERALES/MARINA_MERCANTE/RADIOCOMUNICACIONES/MMSI/
Sweden	PTS	www.pts.se
Finland	Viestintävirasto	https://www.viestintavirasto.fi/en/spectrum/radiolicences/Boatingandnavigation.html
Iceland	Post and telecom administration in Iceland	www.pfs.is
New Zealand	Radio Spectrum Management	https://www.rsm.govt.nz/licensing/radio-operator-certificates-and-callsigns?searchterm=MMSI

81381-3-en-US_A5_PRINT.pdf 118 5/4/2020 3:26:34 PM

Country	Regulatory Body	Website links
Chile	Directemar	www.nauticentro.cl
Panama	Autoridad Maritima de Panama	www.amp.gob.pa/newside/spanish/puertos2/depima/ima.html

81381-3-en-US_A5_PRINT.pdf 119

5/4/2020 3:26:34 PM

Appendix D VHF Channels

International Marine VHF Channels and Frequencies

CH No.	TX Freq	RX Freq (MHz)	Single Freq (MHz)	Use
01	156.050	160.650		Public correspondence, Port operations and Ship movement.
02	156.100	160.700		Public correspondence, Port operations and Ship movement.
03	156.150	160.750		Public correspondence, Port operations and Ship movement.
04	156.200	156.800		Public correspondence, Port operations and Ship movement.
05	156.250	156.850		Public correspondence, Port operations and Ship movement.
06	156.300	156.300	x	Intership. Coordinated search and rescue and ship stations working frequency
07	156.350	160.950		Public correspondence, Port operations and Ship movement.
08	156.400	156.400	x	Intership. Preferred intership channel
09	156.450	156.450	x	Intership, Port operations and Ship movement.
10	156.500	156.500	x	Intership, Port operations and Ship movement. SAR, Pollution incidents, MSI broadcasts coordinated with HMCG.
11	156.550	156.550	x	Port operations and Ship movement.
12	156.600	156.600	x	Port operations and Ship movement.
13	156.650	156.650	x	Intership navigation safety (Bridge-to-bridge). International navigation safety channel. May also be used for ship movement, port operations and limited Ship stations
14	156.700	156.700	x	Port operations and Ship movement.
15	156.750	156.750	x	On-board communications. 1 watt maximum power.
16	156.800	156.800	x	International Distress, Safety and Calling.
17	156.850	156.850	x	On–board communications. 1 watt maximum power.

81381-3-en-US_A5_PRINT.pdf 120 5/4/2020 3:26:34 PM

CH No.	TX Freq	RX Freq (MHz)	Single Freq (MHz)	Use
18	156.900	161.500		Public correspondence, Port operations and Ship movement.
19	156.950	161.550		Public correspondence, Port operations and Ship movement.
1019	156.950	156.950	x	Port operations and Ship movement.
2019	161.550	161.550	x	Port operations and Ship movement. Channel is limited to Ship stations only unless otherwise permitted by UK regulation.
20	157.000	161.600		Public correspondence, Port operations and Ship movement.
1020	157.000	157.000	x	Public correspondence, Port operations and Ship movement.
2020	161.600	161.600	x	Public correspondence, Port operations and Ship movement. Channel is limited to Ship stations only unless otherwise permitted by UK regulation.
21	157.050	161.650		Public correspondence, Port operations and Ship movement. Available for VDSMS
22	157.100	161.700		Public correspondence, Port operations and Ship movement. Available for VDSMS
23	157.150	161.750		Safety. HNCG — SAR and MSI broadcasts.
24	157.200	161.800		Public correspondence, Port operations and Ship movement. Available for VDSMS
1024	157.200	157.200	x	For future use
2024	161.800	161.800	x	For future use
25	157.250	161.850		Public correspondence, Port operations and Ship movement. Available for VDSMS
1025	157.250	157.250	x	For future use
2025	161.850	161.850	x	For future use
26	157.300	161.900		Public correspondence, Port operations and Ship movement. Available for VDSMS
1026	157.300	157.300	x	For future use
2026	161.900	161.900	x	For future use

81381-3-en-US_A5_PRINT.pdf 121 5/4/2020 3:26:34 PM

CH No.	TX Freq	RX Freq (MHz)	Single Freq (MHz)	Use
27	157.350	161.950		Public correspondence, Port operations and Ship movement. Available for testing of new AIS applications.
1027	157.350	157.350	x	Port operations and Ship movement.
2027	161.950	161.950	x	Application specific message (ASM1)
28	157.400	162.000		Public correspondence, Port operations and Ship movement. Available for testing of new AIS applications.
1028	157.400	157.400	x	Port operations and Ship movement.
2028	162.00	162.00	x	Application specific message (ASM2)
60	156.025	160.625		Public correspondence, Port operations and Ship movement.
61	156.075	160.675		Public correspondence, Port operations and Ship movement.
62	156.125	160.725		Public correspondence, Port operations and Ship movement.
63	156.175	160.775		Public correspondence, Port operations and Ship movement.
64	156.225	160.825		Public correspondence, Port operations and Ship movement.
65	156.275	160.875		UK National Coastwatch.
66	156.325	160.925		Public correspondence, Port operations and Ship movement.
67	156.375	156.375	x	Intership, Port operations and Ship movement. HMCG — SAR and Safety.
68	156.425	156.425	x	Port operations and Ship movement.
69	156.475	156.475	x	Intership, Port operations and Ship movement.
71	156.575	156.575	x	Port operations and Ship movement.
72	156.625	156.625	x	Intership. Preferred intership channel.
73	156.675	156.675	x	Intership, Port operations and Ship movement. HMCG — SAR and MSI broadcasts.
74	156.725	156.725	x	Port operations and Ship movement.

81381-3-en-US_A5_PRINT.pdf 122 5/4/2020 3:26:34 PM

CH No.	TX Freq	RX Freq (MHz)	Single Freq (MHz)	Use
75	156.775	156.775	x	Intership Navigation related communications only with 1 watt maximum power.
76	156.825	156.825	x	Intership Navigation related communications only with 1 watt maximum power.
77	156.875	156.875	x	Intership. Preferred intership channel.
78	156.925	161.525		Public correspondence, Port operations and Ship movement.
1078	156.925	156.925	x	Port operations and Ship movement.
2078	161.525	161.525	x	Port operations and Ship movement. Channel is limited to Ship stations only unless otherwise permitted by UK regulation.
79	156.975	161.575		Public correspondence, Port operations and Ship movement.
1079	156.975	156.975	x	Port operations and Ship movement.
2079	161.575	161.575	x	Port operations and Ship movement. Channel is limited to Ship stations only unless otherwise permitted by UK regulation.
80	157.025	161.625		Public correspondence, Port operations and Ship movement. Also marinas and yacht clubs UK only. Available for VDSMS.
81	157.075	161.675		Public correspondence, Port operations and Ship movement. Available for VDSMS
82	157.125	161.725		Public correspondence, Port operations and Ship movement. Available for VDSMS
83	157.175	161.775		Public correspondence, Port operations and Ship movement. Available for VDSMS
84	157.225	161.825		Port operations and Ship movement. HMCG — SAR and MSI broadcasts.
1084	157.225	157.225	x	For future use
2084	161.825	161.825	x	For future use
85	157.275	161.875		Public correspondence, Port operations and Ship movement. Available for VDSMS

81381-3-en-US_A5_PRINT.pdf 123 5/4/2020 3:26:34 PM

CH No.	TX Freq	RX Freq (MHz)	Single Freq (MHz)	Use
1085	157.275	157.275	x	For future use
2085	161.875	161.875	x	For future use
86	157.325	161.925		Port operations and Ship movement. HMCG — SAR and MSI broadcasts.
1086	157.325	157.325	x	For future use
2086	161.925	161.925	x	For future use
87	157.375	157.375	x	Port operations and Ship movement. Available for testing of new AIS applications.
88	157.425	157.425	x	Port operations and Ship movement. Available for testing of new AIS applications.

Please be aware that:

- Intership channels are for communications between ship stations. Intership communications should be restricted to channels 6, 8, 72 and 77. If these are not available, the other channels marked for Intership may be used.
- Channel 70 is used exclusively for Digital Selective Calling (DSC) and is not available for regular voice communications.

Note:

1. Channel 06 may also be used for communications between ship stations and aircraft engaged in coordinated search and rescue operations. Ship stations should avoid harmful interference to such communications on channel 06 as well as to communications between aircraft stations, ice breakers and assisted ships during ice seasons.
2. Within the European Maritime Area and in Canada, channels 10, 67 and 73 may also be used by the individual administrations concerned for communication between ship stations, aircraft stations and participating land stations engaged in coordinated search and rescue and anti-pollution operations in local areas. Channel 10 or 73 (depending on location) are also used for the broadcast of Marine Safety Information by the Maritime and Ship Guard Agency in the UK only.
3. Channel 13 is designated for use on a worldwide basis as a navigation safety communication channel, primarily for intership navigation safety communications.
4. Channels 15 and 17 may also be used for on-board communications provided the effective radiated power does not exceed 1 Watt.
5. The use of channels 75 and 76 should be restricted to navigation related communications only and all precautions should be taken to avoid harmful interference to channel 16. Transmit power is limited to 1 Watt.

81381-3-en-US_A5_PRINT.pdf 124 5/4/2020 3:26:34 PM

Private Channels (Europe only)

Country	Channel Designations	TX Freq	RX Freq	Channel Use
Belgium	96	162.425	162.425	Marina
Denmark	L1	155.500	155.500	Pleasure
	L2	155.525	155.525	Pleasure
Finland, Norway & Sweden	L1	155.500	155.500	Pleasure
	L2	155.525	155.525	Pleasure
	L3	155.650	155.650	Pleasure
Holland (Netherlands)	31	157.550	162.150	Marina
	37	157.850	157.850	Leisure
Denmark, Finland, Norway & Sweden	F1	155.625	155.625	Fishing
	F2	155.775	155.775	Fishing
	F3	155.825	155.825	Fishing
United Kingdom	M1	157.850	157.850	Marina
	M2	161.425	161.425	Marina

The national channels listed above have been allocated for the specific use within the countries listed. To use these channels you must have the appropriate license.

US Marine VHF Channels and Frequencies

Note:
Some of the channel numbers have recently changed. For completeness, both old and new numbers are shown in the table below.

(New) CH No.	(Old) CH No.	TX Freq (MHz)	RX Freq (MHz)	Single Freq	Use
1001	01A	156.050	156.050	x	Port operations and commercial, VTS. Available only in New Orleans / Lower Mississippi area.
1005	05A	156.250	156.250	x	Port operations or VTS in the Houston, New Orleans and Seattle areas.
06	06	156.300	156.300	x	Intership Safety.

81381-3-en-US_A5_PRINT.pdf 125 5/4/2020 3:26:34 PM

(New) CH No.	(Old) CH No.	TX Freq (MHz)	RX Freq (MHz)	Single Freq	Use
1007	07A	156.350	156.350	x	Commercial. VDSMS.
08	08	156.400	156.400	x	Commercial (Intership only). VDSMS.
09	09	156.450	156.450	x	Boater calling. Commercial and Non-commercial. VDSMS.
10	10	156.500	156.500	x	Commercial. VDSMS.
11	11	156.550	156.550	x	Commercial. VTS in selected areas. VDSMS.
12	12	156.600	156.600	x	Port operations. VTS in selected areas.
13	13	156.650	156.650	x	Intership navigation safety (Bridge-to-bridge). Ships >20 metres in length maintain a listening watch on this channel in US waters.
14	14	156.700	156.700	x	Port operations. VTS in selected areas.
15	15	-	156.750	x	Environmental (Receive only). Used by Class 'C' EPIRBs.
16	16	156.800	156.800	x	International Distress, Safety and Calling. Ships required to carry radio, USCG, and most Ship stations maintain a listening watch on this channel.
17	17	156.850	156.850	x	State Control.
1018	18A	156.900	156.900	x	Commercial. VDSMS.
1019	19A	156.950	156.950	x	Commercial. VDSMS.
20	20	157.000	161.600		Port operations (duplex).
1020	20A	157.000	157.000	x	Port operations.

81381-3-en-US_A5_PRINT.pdf 126 5/4/2020 3:26:34 PM

(New) CH No.	(Old) CH No.	TX Freq (MHz)	RX Freq (MHz)	Single Freq	Use
1021	21A	157.050	157.050	x	US Ship Guard only.
1022	22A	157.100	157.100	x	Ship Guard Liaison and Maritime Safety Information Broadcasts. Broadcasts announced on channel 16.
1023	23A	157.150	157.150	x	US Ship Guard only.
24	24	157.200	161.800		Public correspondence (Marine operator).
25	25	157.250	161.850		Public correspondence (Marine operator).
26	26	157.300	161.900		Public correspondence (Marine operator).
27	27	157.350	161.950		Public correspondence (Marine operator).
28	28	157.400	162.000		Public correspondence (Marine operator).
1063	63A	156.175	156.175	x	Port operations and commercial VTS, Available only in New Orleans / Lower Mississippi area.
1065	65A	156.275	156.275	x	Port operations.
1066	66A	156.325	156.325	x	Port operations.
67	67	156.375	156.375	x	Commercial. Used for bridge-to-bridge communications in lower Mississippi river (Intership only).
68	68	156.425	156.425	x	Non-commercial. VDSMS.
69	69	156.475	156.475	x	Non-commercial. VDSMS.
71	71	156.575	156.575	x	Non-commercial. VDSMS.
72	72	156.625	156.625	x	Non-commercial (Intership only). VDSMS.
73	73	156.675	156.675	x	Port operations.
74	74	156.725	156.725	x	Port operations.
77	77	156.875	156.875	x	Port operations (Intership only).

81381-3-en-US_A5_PRINT.pdf 127 5/4/2020 3:26:34 PM

(New) CH No.	(Old) CH No.	TX Freq (MHz)	RX Freq (MHz)	Single Freq	Use
1078	78A	156.925	156.925	x	Non-commercial. VDSMS.
1079	79A	156.975	156.975	x	Commercial. Non-commercial in Great Lakes only). VDSMS.
1080	80A	157.025	157.025	x	Commercial. Non-commercial in Great Lakes only). VDSMS.
1081	81A	157.075	157.075	x	US Government only — Environmental protection operations.
1082	82A	157.125	157.125	x	US Government only.
1083	83A	157.175	157.175	x	US Ship Guard only.
84	84	157.225	161.825		Public correspondence (Marine operator). VDSMS.
85	85	157.275	161.875		Public correspondence (Marine operator). VDSMS.
86	86	157.325	161.925		Public correspondence (Marine operator). VDSMS.
87	87	157.375	161.975		Public correspondence (Marine operator). VDSMS.
88	88	157.425	157.425		Commercial, Intership only. VDSMS.

Please be aware that:

- Recreational boaters normally use channels listed as Non-commercial: 68, 69, 71, 72 1078.
- Channel 70 is used exclusively for DSC and is not available for regular voice communications.
- Channels 75 and 76 are reserved as guards bands for channel 16 and are not available for regular voice communications.

81381-3-en-US_A5_PRINT.pdf 128 5/4/2020 3:26:34 PM

Note:

1. Four digit channels indicate simplex use of the ship station transmit side of an international semi-duplex channel. Operations are different from that of international operations on that channel.
2. Channel 13 should be used to contact a ship when there is danger of collision. All ships of length 20 metres or greater are required to guard VHF channel 13, in addition to VHF channel 16, when operating within US territorial waters.
3. Channel 15 is receive only.
4. Channel 16 is used for calling other stations or for distress calls.
5. Channel 17 and channel 77 have a fixed power output of 1 watt.
6. Channel 13 and channel 67 have an initial power output of 1 watt. User can temporarily override this restrictions to transmit at high power.
7. VDSMS (VHF Digital Small Message Services). Transmissions of short digital messages in accordance with RTCM Standard 12301.1 is allowed.

WX Channels (North America only)

Weather Channel	Frequency in MHz
WX1	162.550
WX2	162.400
WX3	162.475

Weather Channel	Frequency in MHz
WX4	162.425
WX5	162.450
WX6	162.500
WX7	162.525

Weather Channel	Frequency in MHz
WX8	161.650
WX9	161.775
WX10	163.275

Canadian Marine VHF Channels and Frequencies

Note:
Some of the channel numbers have recently changed. For completeness, both old and new numbers are shown in the table below.

(New) CH No.	(Old) CH No.	TX Freq (MHz)	RX Freq (MHz)	Single Freq	Areas of operation	Use
01	01	156.050	160.650		BCC	Public correspondence.
02	02	156.100	160.700		BCC	Public correspondence.
03	03	156.150	160.750		BCC	Public correspondence.
1004	04A	156.200	156.200	x	BCC, EC	Intership, Ship/Shore, Commercial and Safety DFO / Canadian Ship Guard only in BCC area. Commercial fishing in EC area.

81381-3-en-US_A5_PRINT.pdf 129 5/4/2020 3:26:34 PM

(New) CH No.	(Old) CH No.	TX Freq (MHz)	RX Freq (MHz)	Single Freq	Areas of operation	Use
1005	05A	156.250	156.250	x	AC, BCC, EC, GL, NL, INLD BC, WC	Ship movement.
06	06	156.300	156.300	x	All areas	Intership, Commercial, Non-Commercial and Safety Maybe used for search and rescue communications between ships and aircraft.
1007	07A	156.350	156.350	x	AC, BCC, EC, GL, NL, INLD BC, WC	Intership, Ship/Shore and Commercial.
08	08	156.400	156.400	x	EC, INLD BC, WC	Intership, Commercial and Safety. Also assigned for Intership in the Lake Winnipeg area.
09	09	156.450	156.450	x	AC, INLD PRA, BCC	Intership, Ship/Shore, Commercial, Non-commercial, Safety and Ship movement. Commercial — BCC area. May be used to communicate with aircraft and helicopters in predominantly maritime support operations.
10	10	156.500	156.500	x	AC, BCC, GL	Intership, Ship/Shore, Commercial, Non-commercial, Safety and Ship movement. Commercial — BCC area. May also be used for communications with aircraft engaged in coordinated search and rescue and antipollution operations.
11	11	156.550	156.550	x	AC, BCC, GL	Intership, Ship/Shore, Commercial, Non-commercial and Ship movement. VTS — BCC area. Also used for pilotage purposes.
12	12	156.600	156.600	x	AC, BCC, GL, WC	Intership, Ship/Shore, Commercial, Non-commercial and Ship movement. VTS — BCC area. Port operations and pilot information and messages.
13	13	156.650	156.650	x	AC, BCC, EC, GL, NL, INLD BC, WC	Intership, Commercial, Non-commercial and Ship movement. VTS — BCC area. Bridge-to-bridge navigational traffic.
14	14	156.700	156.700	x	AC, BCC, GL	Intership, Ship/Shore, Commercial, Non-commercial and Ship movement. VTS — BCC area. Port operations and pilot information and messages.
15	15	156.750	156.750	x	AC, BCC, EC, GL, NL, INLD BC, WC	Intership, Ship/Shore, Commercial, Non-commercial and Ship movement. Port operations and Ship movement — BCC area. All operations limited to 1 watt maximum power. May also be used for on-board communications.
16	16	156.800	156.800	x	All areas	International distress, safety and calling.
17	17	156.850	156.850	x	AC, BCC, EC, GL, NL, INLD BC, WC	Intership, Ship/Shore, Commercial, Non-commercial and Ship movement. Port operaitons and Ship movement — BCC area. All operations limited to 1 watt maximum power. May also be used for on-board communications.

81381-3-en-US_A5_PRINT.pdf 130 5/4/2020 3:26:34 PM

(New) CH No.	(Old) CH No.	TX Freq (MHz)	RX Freq (MHz)	Single Freq	Areas of operation	Use
1018	18A	156.900	156.900	x	AC, BCC, EC, GL, NL, INLD BC, WC	Intership, Ship/Shore and Commercial. Towing — BCC area.
1019	19A	156.950	156.950	x	All areas	Intership and Ship/Shore. DFO / Canadian Ship Guard. Pacific Pilots — BCC area.
20	20	157.00	161.600		AC, BCC, EC, GL, NL, INLD BC, WC	Ship/Shore, Safety and Ship movement. Port operations only with 1 watt maximum power.
1021	21A	157.050	157.050	x	All areas	Intership and Ship/Shore. DFO / Canadian Ship Guard only.
2021	21B	-	161.650	x	All areas	Safety Continuous Marine Broadcast (CMB) service.
1022	22A	157.100	157.100	x	All areas	Intership, Ship/Shore, Commercial and Non-commercial. For communications between Canadian Ship Guard and non-Canadian Ship Guard stations only.
23	23	157.150	161.750		BCC, INLD BC	Ship/Shore and Public correspondence.
2023	-	-	161.750	x	GL	Safety Continuous Marine Broadcast (CMB) service.
24	24	157.200	161.800		All areas	Ship/Shore and Public correspondence.
25	25	157.250	161.850		BCC	Ship/Shore and Public correspondence.
2025	25B	-	161.850	x	AC	Safety Continuous Marine Broadcast (CMB) service.
26	26	157.300	161.900		All areas	Safety and Public correspondence.
27	27	157.350	161.950		AC, BCC, GL	Ship/Shore and Public correspondence.
28	28	157.400	162.00		BCC	Ship/Shore, Safety and Public correspondence.
2028	28B	-	162.000	x	AC, GL	Safety Continuous Marine Broadcast (CMB) service.
60	60	156.025	160.625		BCC	Ship/Shore and Public correspondence.

81381-3-en-US_A5_PRINT.pdf 131 5/4/2020 3:26:34 PM

(New) CH No.	(Old) CH No.	TX Freq (MHz)	RX Freq (MHz)	Single Freq	Areas of operation	Use
1061	61A	156.075	156.075	x	BCC	Intership, Ship/Shore and Commercial DFO / Canadian Ship Guard only in BCC area. Commercial fishing only in EC area.
1062	62A	156.125	156.125	x	BCC, EC	Intership, Ship/Shore and Commercial DFO / Canadian Ship Guard only in BCC area. Commercial fishing only in EC area.
1063		156.175	156.175	x	BCC	Intership, Ship/Shore and Commercial. Tow boats — BCC area.
64	64	156.225	160.825		BCC	Ship/Shore and Public correspondence.
1064	64A	156.225	156.225	x	EC	Intership, Ship/Shore and Commercial Commercial fishing only.
1065	65A	156.275	156.275	x	All areas	Inership, Ship/Shore, Safety, Commercial and Non-commercial. Search and rescue and antipollution operations on the Great Lakes. Towing on the Pacific Ship. Port operations only in the St. Lawrence river area with 1 watt maximum power. Intership in INLD PRA area.
1066	66A	156.325	156.325	x	AC, BCC, EC, GL, NL, INLD BC, WC	Intership, Ship/Shore, Safety, Commercial and Non-commercial. Port operations only in the St. Lawrence river / Great Lakes areas with 1 watt maximum power. 1 watt marine channel in BCC area.
67	67	156.375	156.375	x	All areas	Intership Ship/Shore, Safety, Commercial and Non-commercial. May also be used for communications with aircraft engaged in coordinated search and rescue and antipollution operations. Commercial fishing only in EC and INLD PRA areas. Pleasure craft — BCC area.
68	68	156.425	156.425	x	All areas	Intership, Ship/Shore and Non-commercial. For marinas, yacht clubs and pleasure craft.
69	69	156.475	156.475	x	AC, BCC, EC, GL, NL, INLD BC, WC	Intership, Ship/Shore, Commercial and Non-commercial. Commercial fishing only — EC area. Pleasure craft — BCC area.
71	71	156.575	156.575	x	AC, BCC, EC, GL, NL, INLD BC, WC	Intership, Ship/Shore, Safety, Commercial,, Non-commercial and Ship movement. Ship movement — BCC area. Marinas and yacht clubs — EC area and on Lake Winnipeg.
72	72	156.625	156.625	x	BCC, EC	Intership, Commercial and Non-commercial May be used to communicate with aircraft and helicopters in predominantly maritime support operations. Pleasure craft — BCC area.

81381-3-en-US_A5_PRINT.pdf 132 5/4/2020 3:26:34 PM

(New) CH No.	(Old) CH No.	TX Freq (MHz)	RX Freq (MHz)	Single Freq	Areas of operation	Use
73	73	156.675	156.675	x	All areas	Intership, Ship/Shore, Safety, Commercial and Non-commercial. May also be used for communications with aircraft engaged in coordinated search and rescue and antipollution operations. Commercial fishing only in EC and INLD PRA areas.
74	74	156.725	156.725	x	BCC, EC	Intership, Ship/Shore, Commercial, Non-commercial and Ship movement. VTS and Ship movement — BCC area.
75		156.775	156.775	x	All areas	Intership, Ship/Shore, Commercial and Ship movement. Simplex port operation, ship movement and navigation related communication only. 1 watt maximum power.
76		156.825	156.825	x	All areas	Intership, Ship/Shore, Commercial and Ship movement. Simplex port operation, ship movement and navigation related communication only. 1 watt maximum power.
77	77	156.875	156.875	x	AC, BCC, EC, GL, NL, INLD BC, WC	Intership, Ship/Shore, Safety and Ship movement. Pilotage BCC area, 25 watts. Port operations only in the St. Lawrence River/Great Lakes areas with 1 watt maximum power.
1078	78A	156.925	156.925	x	BCC, EC	Intership, Ship/Shore and Commercial. Fishing industry — BCC area.
1079	79A	156.975	156.975	x	BCC, EC	Intership, Ship/Shore and Commercial. Fishing industry — BCC area.
1080	80A	157.025	157.025	x	BCC, EC	Intership, Ship/Shore and Non-commercial. Whale watching — BCC area.
1081	81A	157.075	157.075	x	AC, BCC, EC, GL, NL, INLD BC, WC	Intership, Ship/Shore and Safety. DFO / Canadian Ship Guard use only.
1082	82A	157.125	157.125	x	AC, BCC, EC, GL, NL, INLD BC, WC	Intership and Ship/Shore. DFO / Canadian Ship Guard use only.
1083	83A	157.175	157.175	x	BCC, EC	Intership and Ship/Shore DFO / Canadian Ship Guard and other government agencies.
2083	83B	-	161.775	x	AC, BCC, GL	Safety Continuous Marine Broadcast (CMB) service.
84	84	157.225	161.825		BCC	Ship/Shore and Public correspondence.

81381-3-en-US_A5_PRINT.pdf 133 5/4/2020 3:26:34 PM

(New) CH No.	(Old) CH No.	TX Freq (MHz)	RX Freq (MHz)	Single Freq	Areas of operation	Use
85	85	157.275	161.875		AC, BCC, GL ,NL	Ship/Shore and Public correspondence.
86	86	157.325	161.925		BCC	Ship/Shore and Public correspondence.
87	87	157.375	157.375	x	AC, BCC, GL, NL	Intership, Non-commercial and Ship movement. Port operation and ship movement — EC area. Pleasure craft — BCC area.
88	88	157.425	157.425	x	AC, BCC, GL, NL	Intership, Commercial and Ship movement. Port operation and ship movement — BCC area.

Area of operation:

- **AC** — Atlantic Ship, Gulf and St. Lawrence River up to and including Montreal.
- **BCC** — British Columbia Ship (Pacific Ship).
- **EC** — East Ship: includes NL, AC, GL and Eastern Arctic areas.
- **GL** — Great Lakes: includes St. Lawrence above Montreal.
- **NL** — Newfoundland and Labrador.
- **WC** — West Ship: includes BCC, Western Arctic and Athabasca-Mackenzie Watershed areas.
- **INLD BC** — Inland waters of BC and the Yukon
- **INLD PRA** — Inland waters of MB, SK and AB

Note:

1. Four digit channels indicate simplex use of the ship station transmit side of an international semi-duplex channel. Operations are different from that of international operations on that channel.
2. Channel 16 is used for calling other stations or for distress calls.
3. Channel 70 is used exclusively for Digital Selective Calling and is not available for regular voice communications.

81381-3-en-US_A5_PRINT.pdf 134 5/4/2020 3:26:34 PM

Appendix E Phonetic alphabet

To help make call letters more clearly understood, and to assist in spelling out similar sounding or unfamiliar word, radiotelephone users employ the international phonetic alphabet.

A	ALPHA	**N**	NOVEMBER
B	BRAVO	**O**	OSCAR
C	CHARLIE	**P**	PAPA
D	DELTA	**Q**	QUEBEC
E	ECHO	**R**	ROMEO
F	FOXTROT	**S**	SIERRA
G	GOLF	**T**	TANGO
H	HOTEL	**U**	UNIFORM
I	INDIA	**V**	VICTOR
J	JULIET	**W**	WHISKEY
K	KILO	**X**	X-RAY
L	LIMA	**Y**	YANKEE
M	MIKE	**Z**	ZULU

81381-3-en-US_A5_PRINT.pdf 135

5/4/2020 3:26:34 PM

Appendix F Prowords

Prowords can be used to simplify and speed up radio communications.

Proword	Meaning
ACKNOWLEDGE	Have you received and understood?
CONFIRM	Is that correct?
CORRECTION	An error has been made?
I SAY AGAIN	I repeat (e.g. important information).
I SPELL	Phonetically spelling of the word.
OUT	End of communication.
OVER	I have completed this part of the message and am inviting you to reply.
RECEIVED	Receipt acknowledge-ment.
SAY AGAIN	Repeat your message.
STATION CALLING	Used when a station is uncertain of the identity of a station which is calling.

FCC Compliance Notice
This device complies with part 15 of the FCC Rules. Operation is subject to the following two conditions: (1)
This device may not cause harmful interference, and
(2) this device must accept any interference received, including interference that may cause undesired operation.
Any changes or modifications not expressly approved by the party responsible for compliance could void the user's authority to operate the equipment.
This equipment has been tested and found to comply with the limits for a Class B digital device, pursuant to part 15 of the FCC Rules. These limits are designed to provide reasonable protection against harmful interference in a residential installation. This equipment generates, uses and can radiate radio frequency energy and, if not installed and used in accordance with the instructions, may cause harmful interference to radio communications. However, there is no guarantee that interference will not occur in a particular installation. If this equipment does cause harmful interference to radio or television reception, which can be determined by turning the equipment off and on, the user is encouraged to try to correct the interference by one or more of the following measures:
-Reorient or relocate the receiving antenna.
-Increase the separation between the equipment and receiver.
-Connect the equipment into an outlet on a circuit different from that to which the receiver is connected. -Consult the dealer or an experienced radio/TV technician for help.
FCC Radiation Exposure Statement
This equipment complies with FCC radiation exposure limits set forth for an controlled environment .
This transmitter must not be co-located or operating in conjunction with any other antenna or transmitter.
This equipment should be installed and operated with minimum distance 89cm between the radiator& your body

This radio complies with IEEE and ICNIRP exposure limits for occupational/controlled RF exposure environment at operating duty factors of up to 50% and is authorized by the FCC/ISEDC for occupational use only.

ISEDC Radiation Exposure Statement:
This equipment complies with ISEDC RF radiation exposure limits set forth for an controlled environment. This transmitter must not be co-located or operating in conjunction with any other antenna or transmitter. This equipment should be installed and operated with minimum distance 89cm between the radiator& your body.
IC exposition aux radiations:
Cet équipement est conforme avec ISEDC les limites d'exposition aux rayonnements définies pour un contrôlé environnement.
Cet émetteur ne doit pas être co-localisés ou fonctionner en conjonction avec une autre antenne ou émetteur.
Cet équipement doit être installé et utilisé avec une distance minimale de 89cm entre le radiateur et votre corps.
Any changes or modifications not expressly approved by the party responsible for compliance could void the user's authority to operate the equipment.
Tous les changements ou modifications non expressément approuvée par le responsible de la conformité pourrait vider l'utilisateur est habilité à exploiter l'équipemen.

81381-3-en-US_A5_PRINT.pdf 136 5/4/2020 3:26:34 PM

Index

A

Accessories 112
  Wired 112
  Wireless 112
Additional components 17
AIS receiver 75
Applicable products 17
ATIS
  Enabling/Disabling 55, 75
ATIS ID 21, 54

B

Backlight adjustment 51
Bracket mounting 30
Brightness 52
  Adjustment 51

C

Cable
  Bend radius 38
  Protection 38
  Routing 38
  Security 38
  Strain relief 38
Cable routing 24
Call log 69
  Details 69
  Types 69
Checking password 59
Cleaning 84
Compass safe distance 24
Compatible MFDs 18
Connecting SeaTalkng ® cables 43
Connections 39
  Bare wires 38
  Battery 40
  DeviceNet 42
  Distribution panel 40
  Fistmic (Front) 42
  Fistmic (Rear) 42
  General cabling guidance 38
  Loud hailer 45
  NMEA 0183 43
  NMEA 2000 42
  Passive speaker 44
  Primary station 39
  Ray53 38
  Ray63 39
  Ray73 39
  Raymic handset 42
  SeaTalkng 42–43
  Secondary station 39, 42
  VHF antenna 43
  Wire 38
  Wireless handset 44
  Wireless hub 58
  Wireless speaker 45, 59
Contact details 100
Contrast adjustment 51
Controls
  Base station 48
  Fistmic 48
  Raymic 48
  Wired handset 48
  Wireless handset 48

D

Declaration of Conformity 12
DeviceNet cables 113
Diagnostics
  Wireless speaker 97
Digital Selective Calling, *See* DSC
Dimensions
  Active speaker 28
  Fistmic 28
  Passive speaker 28
  Ray53 27
  Ray63 27
  Ray73 27
  Raymic 28
  Wired handset 28
  Wireless hub 29
Display set-up 77
Distress call 64
  Cancelling 65
Documentation 16
Drilling

Product holes 30–31
DSC set-up 70

E

Electromagnetic Compatibility 25
EMC 25

F

Front bezel
Attaching 32
Fuse rating, Wireless speaker 44–45

G

GNSS
Antenna 17
Displayed data 56
Enabling/Disabling 55
Integrated 55
Internal 55
No position data 55
Position information 56
set-up 55
GPS, *See* GNSS
Group call 68
Making 68
Receiving 68

H

Handset
Power 49
Homescreen 49

I

Individual call 64
Making 68
Reason codes 67
Receiving 68
Installation
Best practice 41
EMC guidelines 25
multiple antennas 25, 86
surface requirements 24
Ventilation 24
VHF antenna requirements 25
Intercom 81
Interference
Compass 24
Electrical 24
RF 24

L

LED
Wireless speaker 97
Licensing
Europe and ROW Requirement 19
ISED Requirement 19
Requirement 19
USA Requirement 19
LightHouse™ 3
Tips and Tricks 101
Location requirements
GNSS 24–25
GPS 24–25
Wireless 26
Loud hailer 80
location requirements 25

M

Maintenance 84
Making designated call 64
Manual position 56
Mayday call 65
Menus
Display set-up 77
DSC set-up 70
Fog 80
Hailer 80
Intercom 80
Main menu 50
Set-up 75
Wireless set-up 60
MMSI 20, 92

Where to apply 118
MMSI number 53
Mounting 31
Bracket 30
Fistmic 32
Handset 32
Hole covers 30
Hook plate 32
Options 30
Panel 30–31
Pass-through panel kit 33
Product holes 30–31
Ray53 30
Ray63 31
Ray73 31
Raymic 32
Wired handset 33
Wired speaker 33
Wireless handset 35
Wireless hub 34
Wireless speaker 33
MPE 25

N

Network
Selection 53
NMEA
Settings
Baud rate 53
NMEA 0183
Sentences (PGNs) 115
NMEA 2000
PGNs 116

O

Optional components 17

P

Panel mounting 30–31
Parts supplied
Ray53 18
Ray63 19
Ray73 19
Phonebook 69
Adding entry 69
Delete entry 69
Updating entry 69
Position request 68
Automatic response 69
Making 68
Responding 69
Power 39
Battery connection 40
Distribution 40
Distribution panel 40
Grounding 41
Sharing a breaker 40
Power cable extension 41
Product
Documentation 16
overview 16
Product recycling (WEEE) 13
Product support 100

R

Radio Frequency (RF) interference 24
Routine call, *See* Individual call

S

Safety call 64
Making 67
Receiving 67
Scan mode 74
Setting 74
SeaTalkng
Connecting 43
SeaTalkng cables 112
SeaTalkng documentation 16
SeaTalkng ®
Connecting cables 43
Service Center 100
Servicing 84
Set-up menu 75
Shared brightness 52
Software update 21
Software updates 21

Software version 21
Spares 112
Specification
  Battery 108
  Charger 108
  Wired (Passive) speaker 108
  Wired handset (Raymic) 107
  Wireless (Active) speaker 109
  Wireless handset 108
  Wireless handset charging holster 108
  Wireless hub 108
Station priority 56
Status bar 50
Support forum 101
Switching power output 55

T

Technical specification 103
  Ray53 104
  Ray60 105
  Ray73 106
Technical support 100–101
Test call 70
  Making 70
  Receiving 70
Thermal breaker rating, Wireless speaker 44–45
Time
  Format 56
  Offset 56
Tools required 29
Training courses 101
Transmit power 55
Troubleshooting 86
  GNSS 91
  GPS 91
  Handset 94
  Power 87
  VHF radio AIS functions 93
  VHF radio alarm audio 90
  VHF radio audio 89
  VHF radio DSC functions 92
  Wireless handset / hub 95
Trunnion mounting 30

U

Urgency call 64
  Making 67
  Receiving 67

V

VHF antenna 17
VHF channels
  Canada 129
  International 120
  Private (Europe) 125
  United States 125
  Weather (North America) 129
Video Gallery 101

W

Warranty 100
Watch mode 74
  Dual watch 74
  Setting 74
  Triple watch 74
Water ingress 24
Waterproofing 24
WEEE Directive 13
Wireless
  Channel 27
  Channel changing 59
  Interference 26
  Password changing 59
Wireless charging 58
Wireless components 18
Wireless handset stations 58
Wireless hub 59
  Antenna extension 34
  Name change 59
  Pairing 58
  Password 58, 60
  SSID change 59
Wireless hub settings 60
Wireless menu 60
Wireless set-up 60
Wireless speaker
  Disconnecting 60
  Pairing 59

Raymarine
Marine House, Cartwright Drive, Fareham, Hampshire.
PO15 5RJ. United Kingdom.

Tel: +44 (0)1329 246 700

www.raymarine.com

Raymarine®

a brand by FLIR®