SYNIC®
Intelligent Wireless

Data Sheet

Product name：RF 5G Wireless Module

Model No.：IA9Q5 S83D-E

Project Code：SMMDIM9QC58RH4

Version 0.2

Aug. 22, 2017

Syncomm Technology Corp.

10F., No. 101, Sec. 2, Gongdao 5th Rd., East Dist., Hsinchu City, Taiwan, R.O.C.
Tel: +886-3-5169188
Fax: +886-3-5169111
http://www.syncomm.com.tw

INDEX

1. Features....3
2. Application....3
3. RF Specification....4
4. Audio Specification....5
5. Electrical Specification....6
6. Mechanical Specification....7
7. Block Diagram....11
8. Interface....12
9. Design Reference....13
10. Antenna Application....15
11. Ordering Information....20
12. Revision History....20

This document is proprietary and confidential to Syncomm Technology Corp.
SYNIC and Intelligent Wireless are trademarks of Syncomm Technology Corp.
All other trademarks and registered trademarks are the property of their respective owners.

1. Features

- **5.2GHz/5.8GHz ISM Band**
- **GFSK modulation**
- **Low BOM cost**
- **Long distance > 30m (Line of sight)**
- **Support 1-1 duplex mode or 1-N broadcasting mode**
- **RF frequency hopping in 58 channels**
- **Digital I2S audio interface**
- **Support no audio detection function**
- **Audio format 24bit , 32/44.1/48KHz sampling rate**
- **Robust Packet error correction**
- **Low power consumption**
- **No RF induced audio noise**
- **Compatible with FCC/ CE regulations**

2. Application

- **Wireless HTiB Rear Speaker**
- **Wireless Outdoor Speaker**
- **Wireless TV theater**
- **Wireless Audio Sender**
- **Wireless Headphone**
- **Wireless Stereo Ear Microphone**

3. RF Specification

Item	Min	Typ	Max	Unit	Note
Channel Range	5165	—	5200	MHz	
-20dB bandwidth	—	2.5	—	MHz	
RF Output Power		12		dBm	Peak power at Antenna port
Sensitivity	—	-90	-86	dBm	The smaller, the better

Table 1 5.2GHz RF Specification

Item	Min	Typ	Max	Unit	Note
Channel Range	5740	—	5840	MHz	
-20dB bandwidth	—	2.5	—	MHz	
RF Output Power		11		dBm	Peak power at Antenna port
Sensitivity	—	-89	-86	dBm	The smaller, the better

Table 2 5.8GHz RF Specification

4. Audio Specification

2.1 CH						
	Item	Min	Typ	Max	Unit	Note
2.0 CH	SNR	90	94	—	dBr	@1kHz
	THD + N	—	-80	-75	dB	@1kHz, the smaller, the better
	Frequency Response	20	—	20k	Hz	@±1dBm
	Dynamic range	90	94		dB	@1kHz
0.1 CH	SNR	90	94		dBr	@1kHz
	THD + N		-84	-80	dB	@1kHz, the smaller, the better
	Frequency Response	20		5k	Hz	@±3dBm
	Dynamic range	90	94		dB	@1kHz

Note: Test condition is that using Card type EVB board with ADC: AK5357 at master mode and DAC: AK4386 at master mode.

Table 3 ADC to DAC

2.1 CH						
	Item	Min	Typ	Max	Unit	Note
2.0 CH	SNR	135	140		dBr	@1kHz
	THD + N		-100	-95	dB	@1kHz, the smaller, the better
	Frequency response	20		20k	Hz	@±1dBm
	Dynamic range	95	100		dB	@1kHz
0.1 CH	SNR	130	135		dBr	@1kHz
	THD + N		-100	-95	dB	@1kHz, the smaller, the better
	Frequency response	20		5k	Hz	@±3dBm
	Dynamic range	95	100		dB	@1kHz

Note: Test condition is that using sample rate 48 kHz, NFsCLK factor 512 and resolution 24.

Table 4 I2S to I2S

5. Electrical Specification

Item	Min	Typ	Max	Unit	Note
Power Supply Voltage	3.0	3.3	3.6	V	
Consumption Current (TX_MODE)	85	100	115	mA	12dBm, continue mode, no GPIO driving
Consumption Current (RX_MODE)	60	65	75	mA	Receiving only, no GPIO driving
Operating Temperature	0	25	55	℃	

Table 5

Item						
Symbol	**Parameter**	**Min**	**Typ**	**Max**	**Unit**	**Conditions**
V_{IH}	Input High Threshold	2.0	—	3.33	V	LDO_OUT=3V
V_{IL}	Input Low Threshold	-0.3	—	0.8	V	LDO_OUT=3V
V_{OH}	Output High Threshold	2.4	—	—	V	LDO_OUT=3V
V_{OL}	Output Low Threshold	—	—	0.4	V	LDO_OUT=3V

Table 6

◆ Power On Reset Characteristics

Symbol	Parameter	Min	Typ	Max	Unit	Conditions
VDD_CORE	1.8V POR input	1.62	1.8	1.98	V	
PORN	1.8V POR output					
VR18	Rising Detection Level		1.5		V	
VF18	Falling Detection Level	1.33	1.4	1.47	V	
TLH18	Rising Delay	2			µS	VDD_CORE slew rate = 1V/µS
THL18	Falling Delay	2			µS	VDD_CORE slew rate = 1V/µS

Table 7

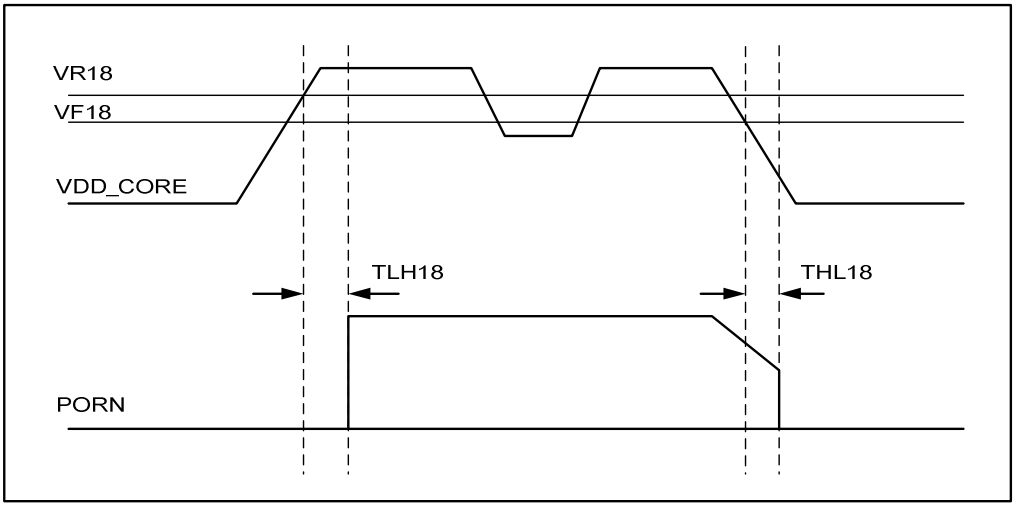

Fig 5.1 Power On Reset Timing Chart

6. Mechanical Specification

6.1 Without Shielding Case

- Dimension：20 * 40 * 6.7 mm
- PCB 4 Layers

  Mechanical Drawing：

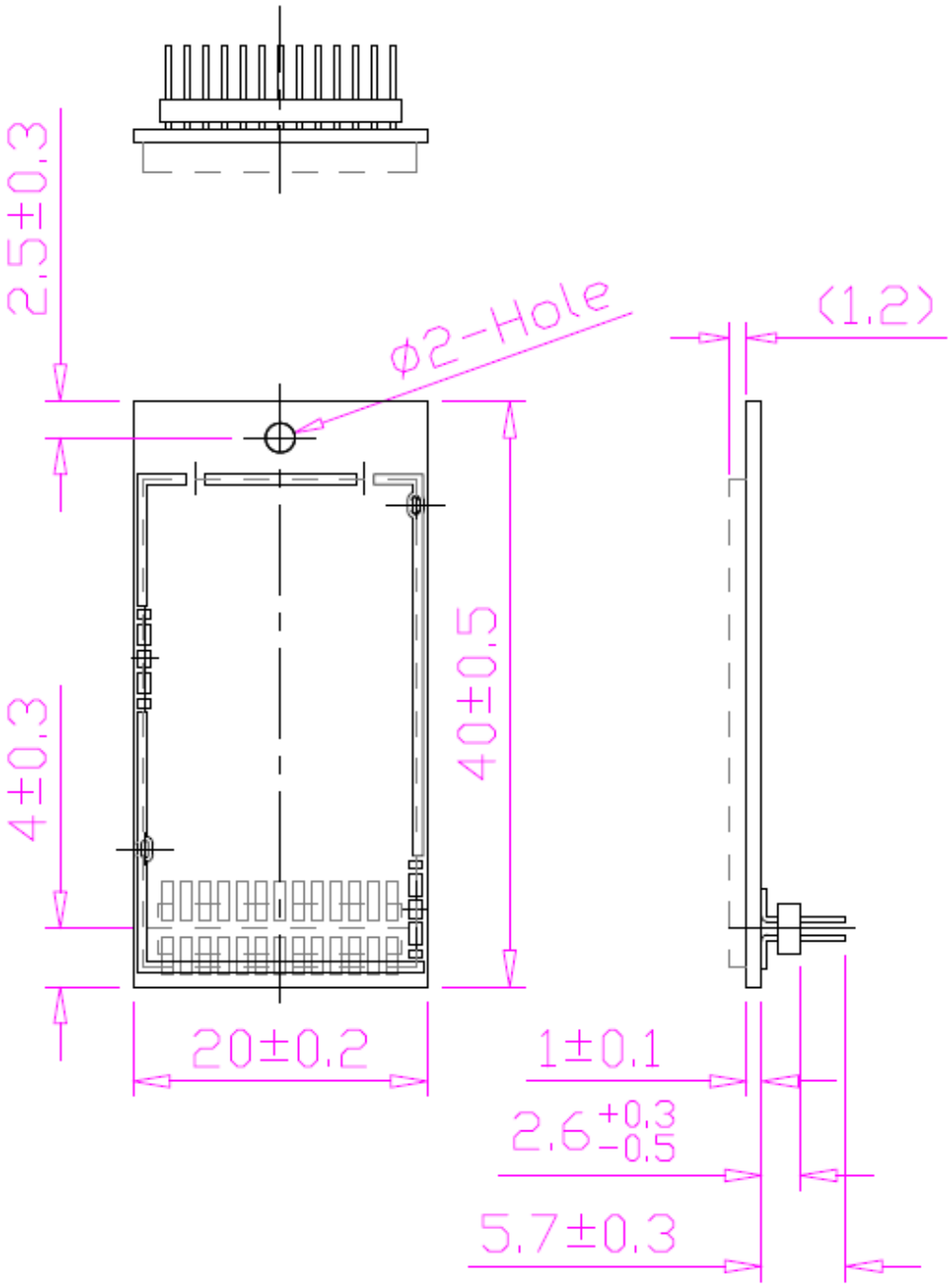

Fig 6.1 Mechanical Drawing of S83D-E Module

◆ Propose 1.27mm Female Header size：H:4.3±0.15mm W:3.0±0.15mm

6.2 With Shielding Case

- Dimension：20 * 40 * 8.7 mm
- PCB 4 Layers
  Mechanical Drawing：

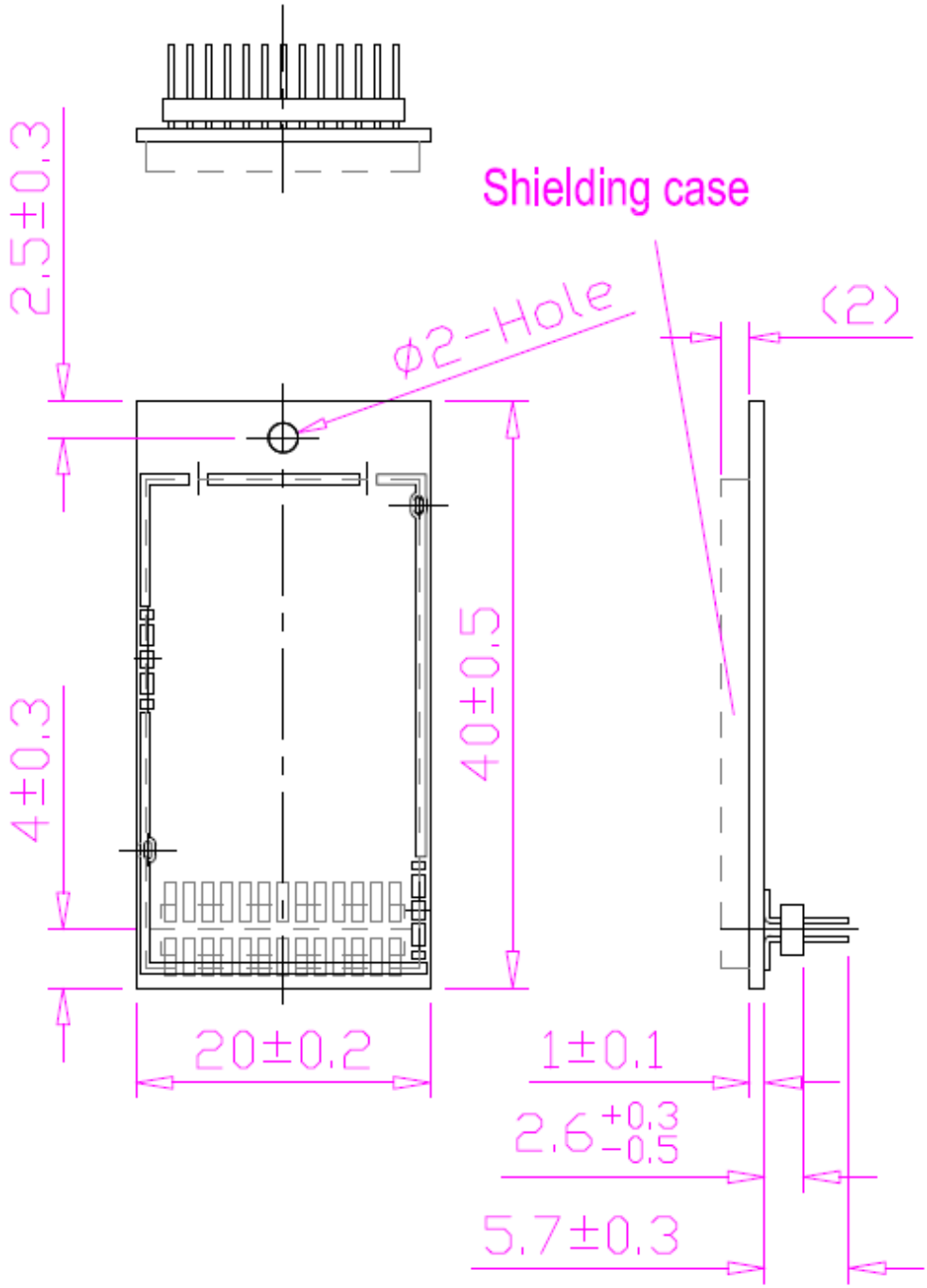

Fig 6.2 Mechanical Drawing of S83D-E Module with shielding case

◆ Propose 1.27mm Female Header size：H:4.3±0.15mm W:3.0±0.15mm

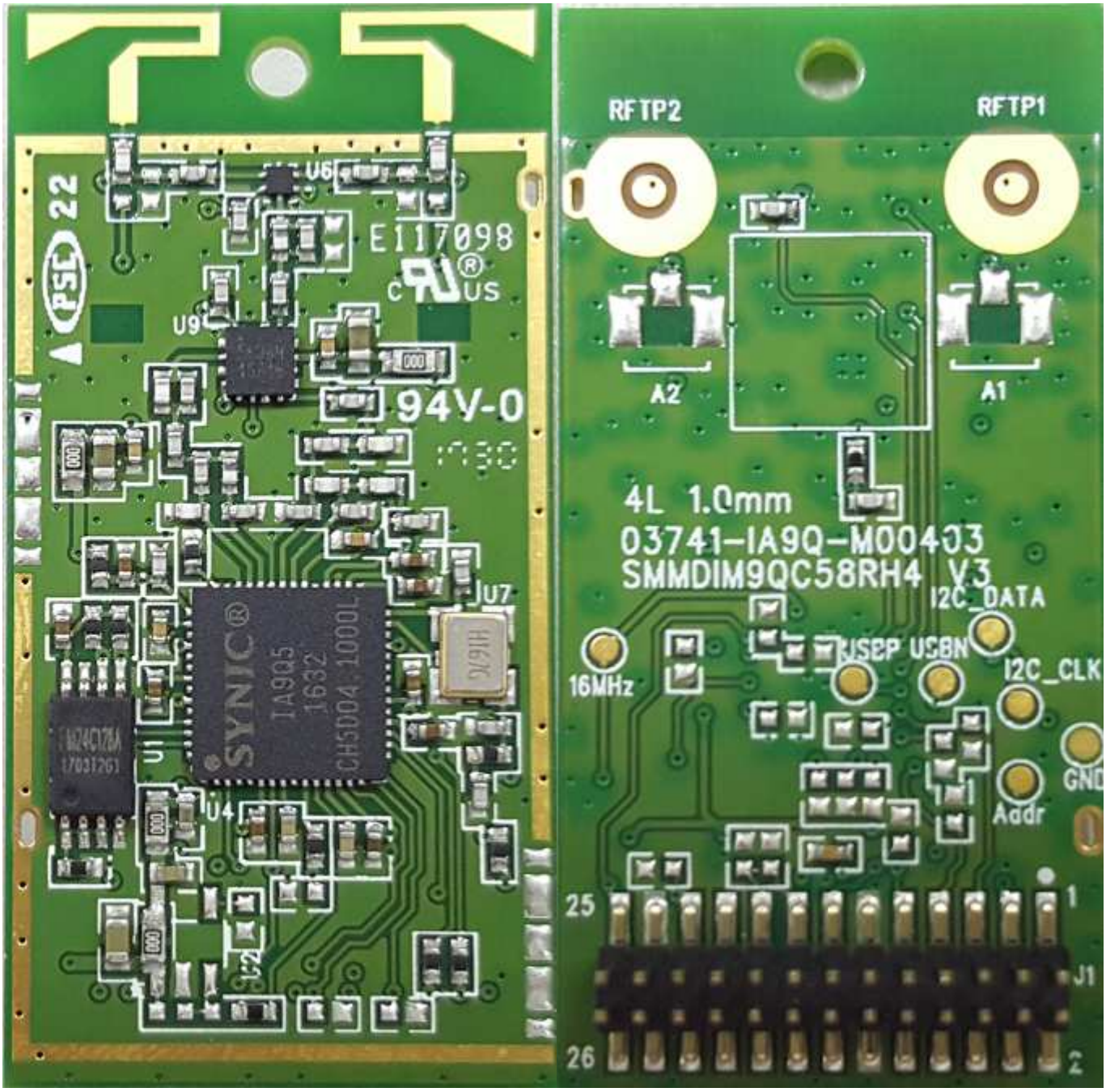
RFTP2
RFTP1
E117098
94V-0
A2
A1
4L 1.0mm
03741-IA9Q-M00403
SMMDIM9QC58RH4 V3
I2C_DATA
USBP USBN
I2C_CLK
16MHz
GND
Addr
25
26
J1
U6
U9
U7
U4
U1
SYNIC
IA9Q5
1632
CH5D04.1000L

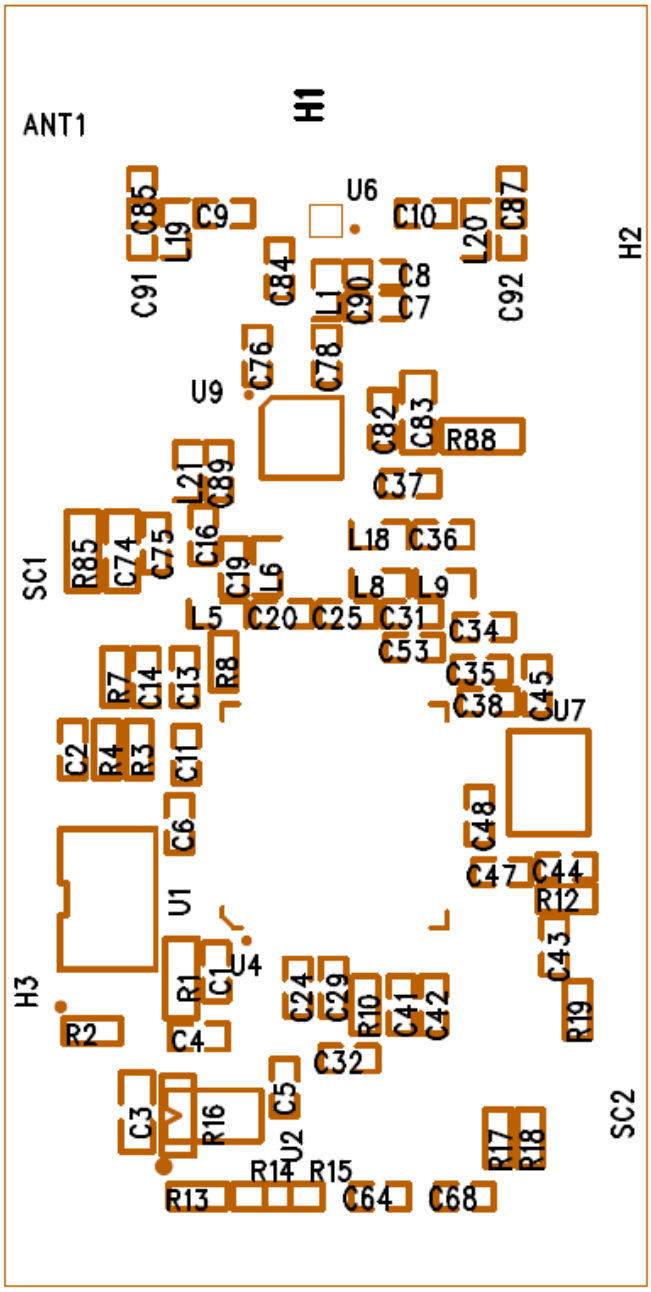
ANT1
H1
U6
C85
C9
L19
C91
C84
L1
C90
C8
C7
C10
L20
C87
C92
H2
U9
C76
C78
C82
C83
R88
L21
C89
C37
SC1
R85
C74
C75
C16
C19
L6
L18
C36
L8
L9
L5
C20
C25
C31
C34
C53
R7
C14
C13
R8
C35
C38
C45
U7
C2
R4
R3
C11
C6
C48
C47
C44
R12
U1
U4
R1
C1
C24
C29
R10
C41
C42
C43
R19
H3
R2
C4
C32
C3
R16
C5
U2
R14
R15
R13
C64
C68
R17
R18
SC2

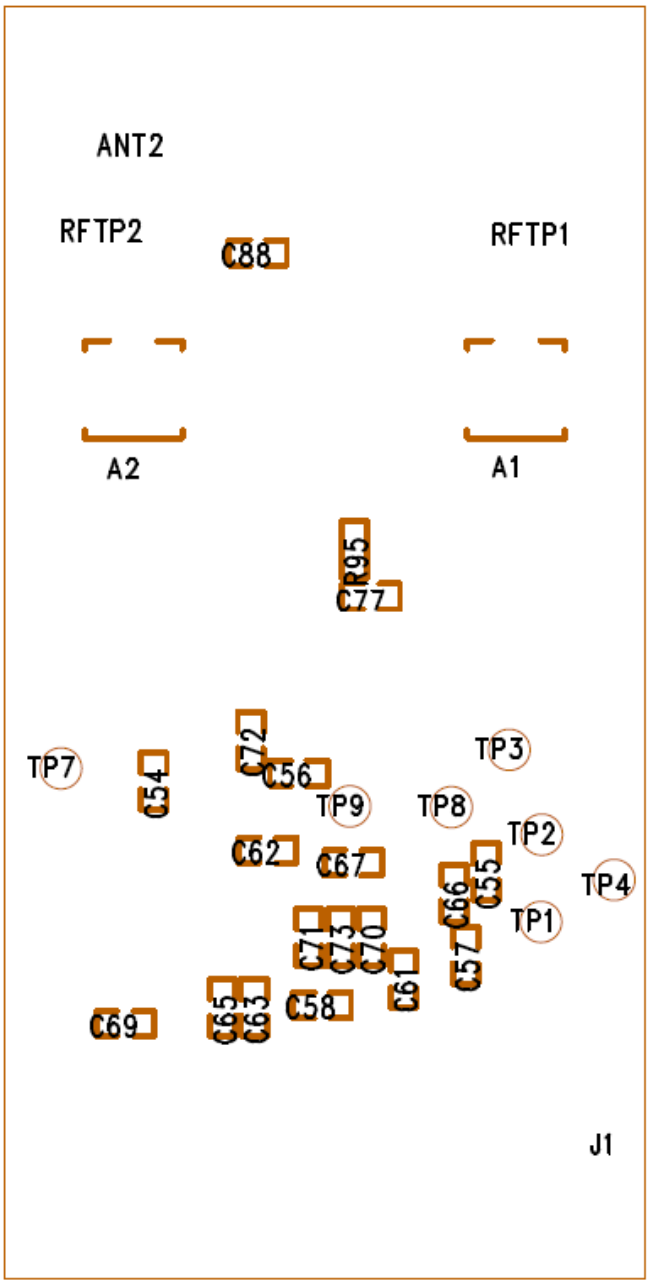
ANT2
RFTP2
C88
RFTP1
A2
A1
R95
C77
TP7
C54
C72
C56
TP3
TP9
TP8
TP2
C62
C67
C66
C55
TP4
TP1
C71
C73
C70
C57
C61
C69
C65
C63
C58
J1

7. Block Diagram

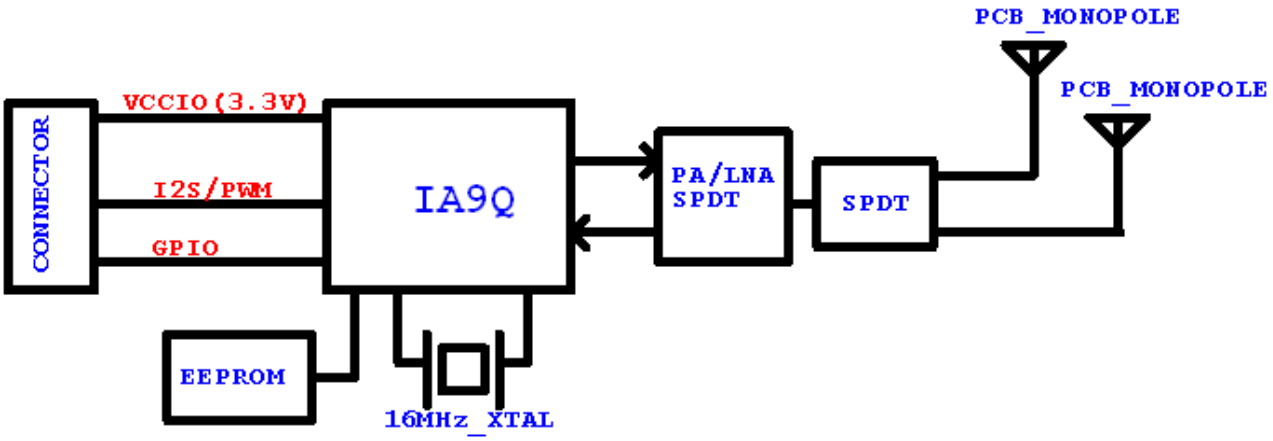

Fig 7.1 Block Diagram of IA9Q5 S83D-E Module

8. Interface

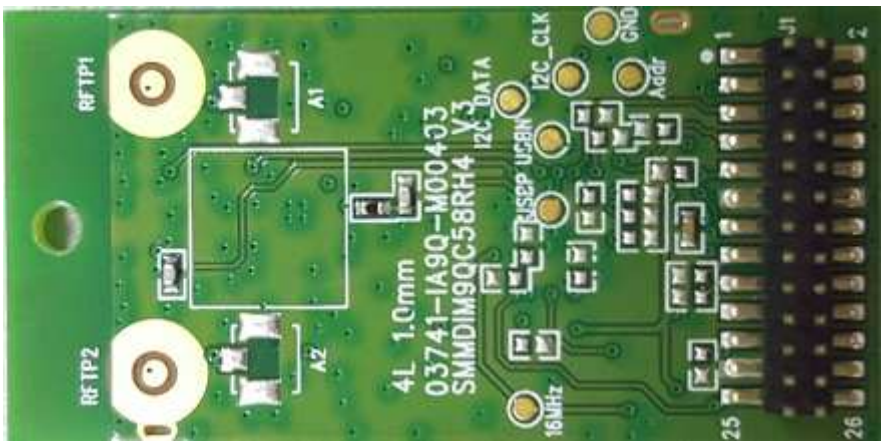

Fig 8.1 Pin sequence of S83D-E Module (Bottom View)

Pin	Name	I/O	TX Function Define	RX Function Define
1	VCCIO	P	DC 3.0 ~ 3.6V IN	DC 3.0 ~ 3.6V IN
2	DGND	P	Digital GND	Digital GND
3	SPB_I2S_MCLK	I/O	SPB I2S audio MCLK system clock output	SPB I2S audio MCLK system clock output
4	GPIO 32	I/O	GPIO	AMP MUTE
5	GPIO 14	I/O	GPIO	GPIO
6	GPIO 31	I/O	GPIO	GPIO
7	GPIO 17	I/O	GPIO	GPIO
8	GPIO 36	I/O	I2C_BUSY，Module Pull High	I2C_BUSY，Module Pull High
9	I2C_CLK	I/O	I2C Master/Slave clock signal	I2C Master/Slave clock signal
10	I2C_DATA	I/O	I2C Master/Slave data signal	I2C Master/Slave data signal
11	DGND	P	Digital GND	Digital GND
12	DGND	P	Digital GND	Digital GND
13	GPIO 27	I/O	GPIO	Pairing
14	GPIO 21	I/O	GPIO	GPIO
15	GPIO 16	I/O	GPIO	ON/OFF 12V
16	GPIO 34	I/O	I2S Master/Slave Select	I2S Master/Slave Select
17	M_RESET(PORN)	I/O	Internal power on reset (1)	Internal power on reset (1)
18	I2C_CLK	I/O	I2C Master/Slave clock signal	I2C Master/Slave clock signal
19	I2C_DATA	I/O	I2C Master/Slave data signal	I2C Master/Slave data signal
20	GPIO 30	I/O	GPIO	AMP RESET(L Act)
21	SPA_I2S_DATA	I/O	I2S DATA 0	SYNC LED
22	SPB_I2S_LRCK	I/O	SPB I2S audio LRCK	SPB I2S audio LRCK
23	DGND	P	Digital GND	Digital GND
24	SPB_I2S_BCK	I/O	SPB I2S audio BCK	SPB I2S audio BCK
25	GPIO 15	I/O	GPIO	ON/OFF 3.3V
26	SPB_I2S_DATA	I/O	SPB I2S audio Data	SPB I2S audio Data

Table 8 IO Function Define

Note : (1) *.Not need external RC circuit to do RC reset
*.Power On Reset Characteristics can reference section 5 Electrical Specification (page 6)
*.External controller can direct control M_RESET but should assign the control IO as input for normal operation and output low to Reset S83D-E Module

9. Design Reference

9.1 ADC/DAC Reference Design

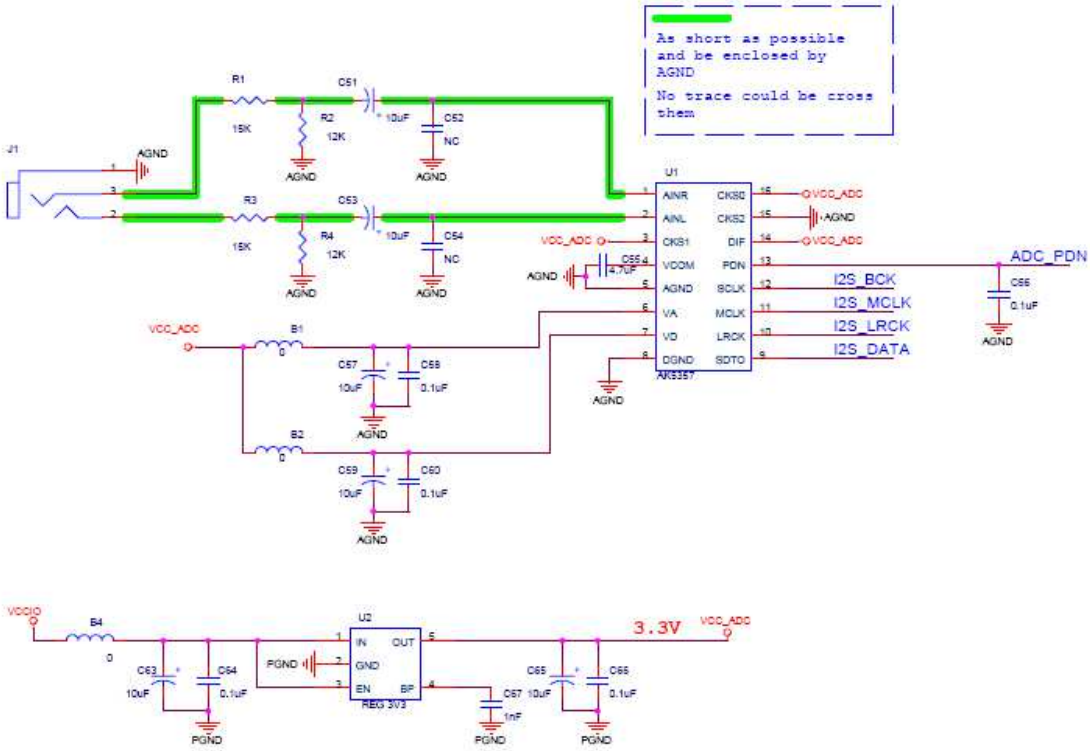

Fig 9.1 ADC reference design circuit

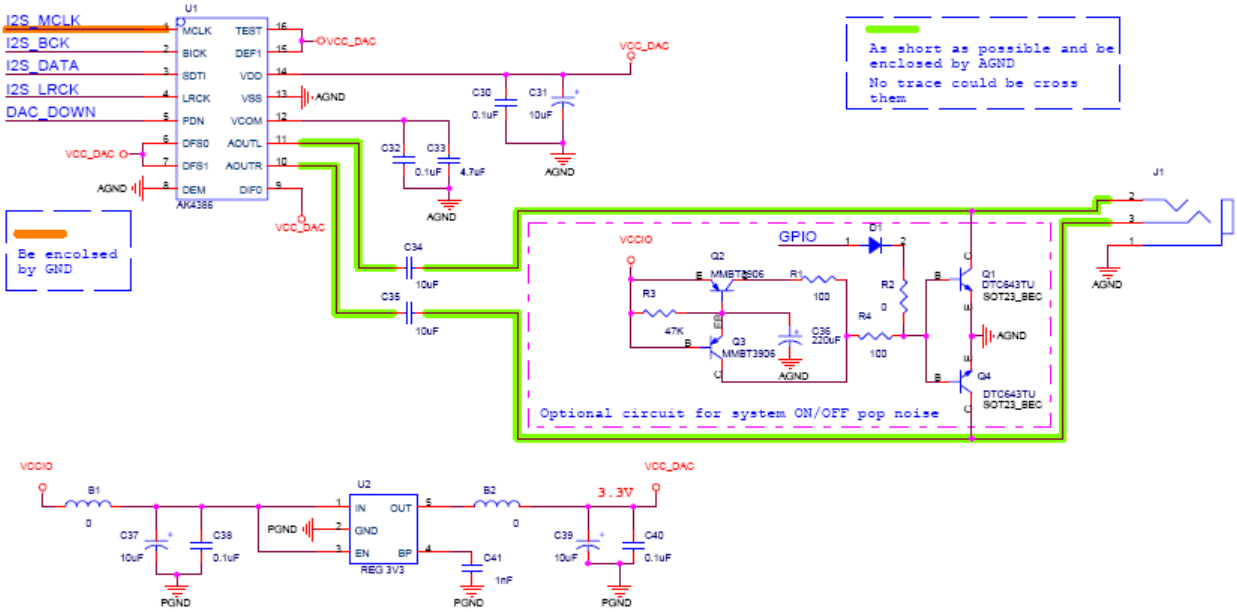

Fig 9.2 DAC reference design circuit

9.2 I2S Timing Chart

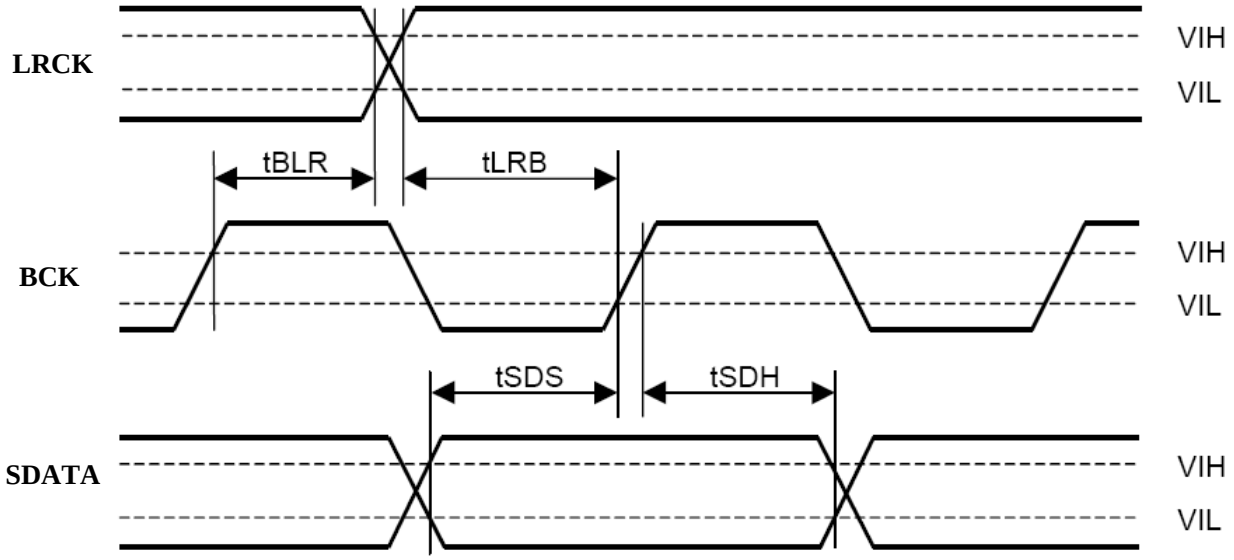

Fig 9.3 I2S timing chart

Symbol	Parameter	Min	Typ	Max	Unit
tBLR	BCK rising to LRCK edge	60			ns
tLRB	LRCK edge to BCK rise	60			ns
tSDS	SDATA setup time	60			ns
tSDH	SDATA hold time	60			ns

Table 9

10. Antenna Application

10.1 Suggested Clear Area

The recommended antenna clearance for embedded PCB antennas are shown below. Note that this clearance should be maintained when mounting the module on a motherboard.

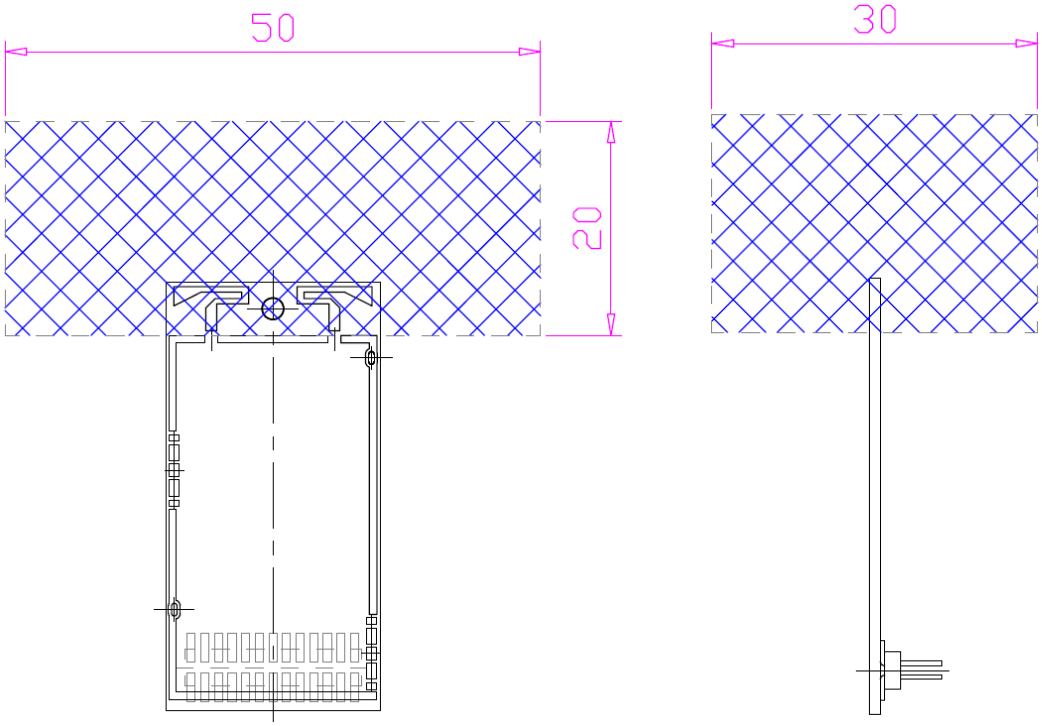

Unit : mm

Do not place any copper, metal or even PCB in the area marked with cross lines.

Fig 10.1 Antenna Clearance Recommendations from Top and Side View

10.2 Antenna Drawing

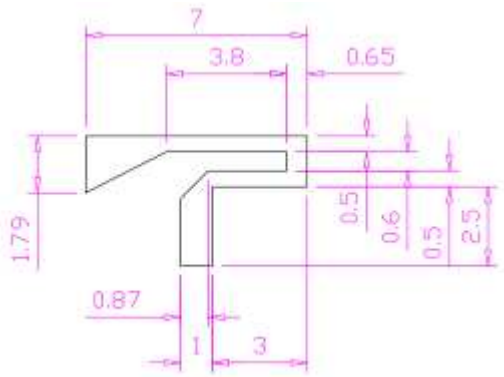

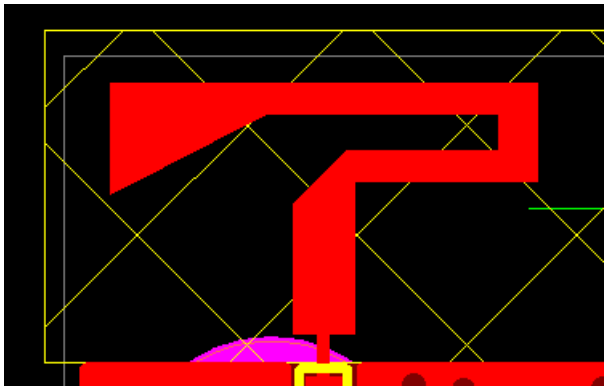

10.3 Antenna Pattern

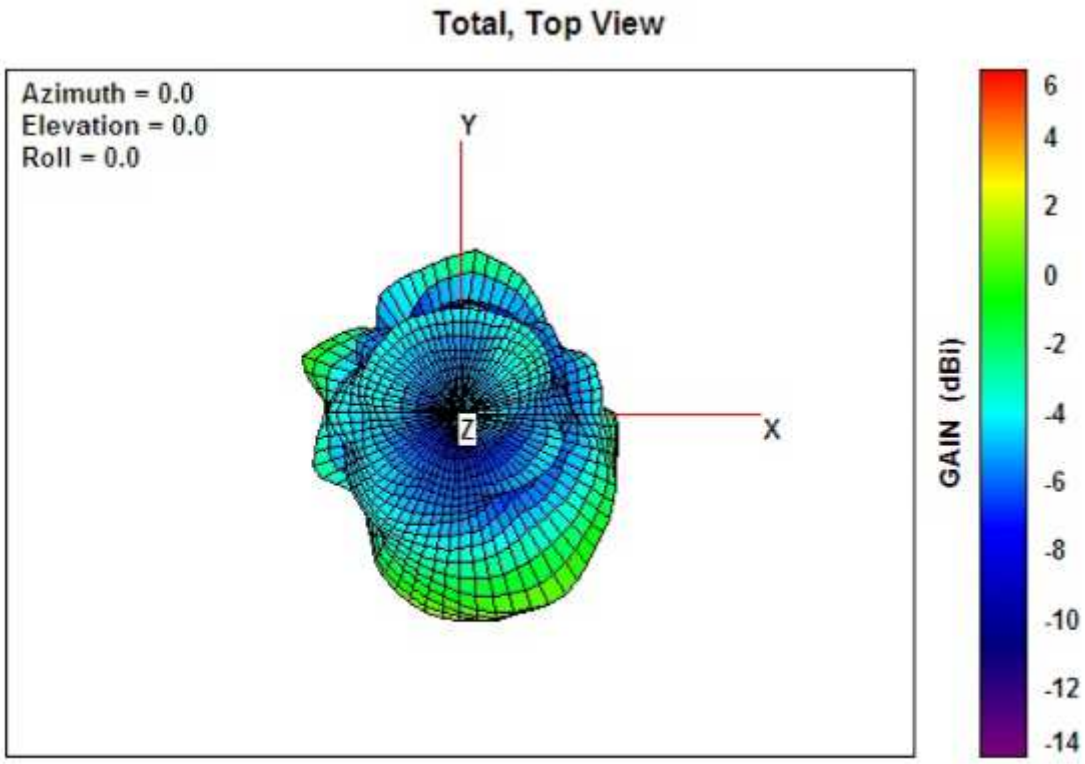

Free-Space Total GAIN, Top View, 5800.0 MHz

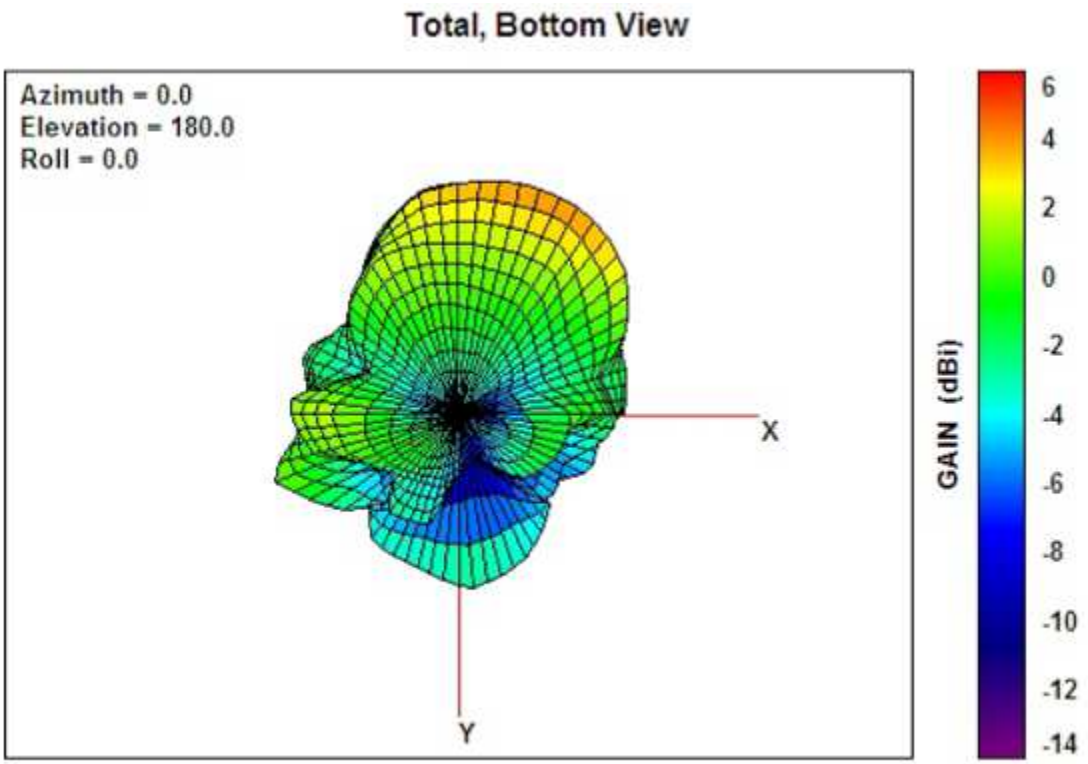

Free-Space Total GAIN, Bottom View, 5800.0 MHz

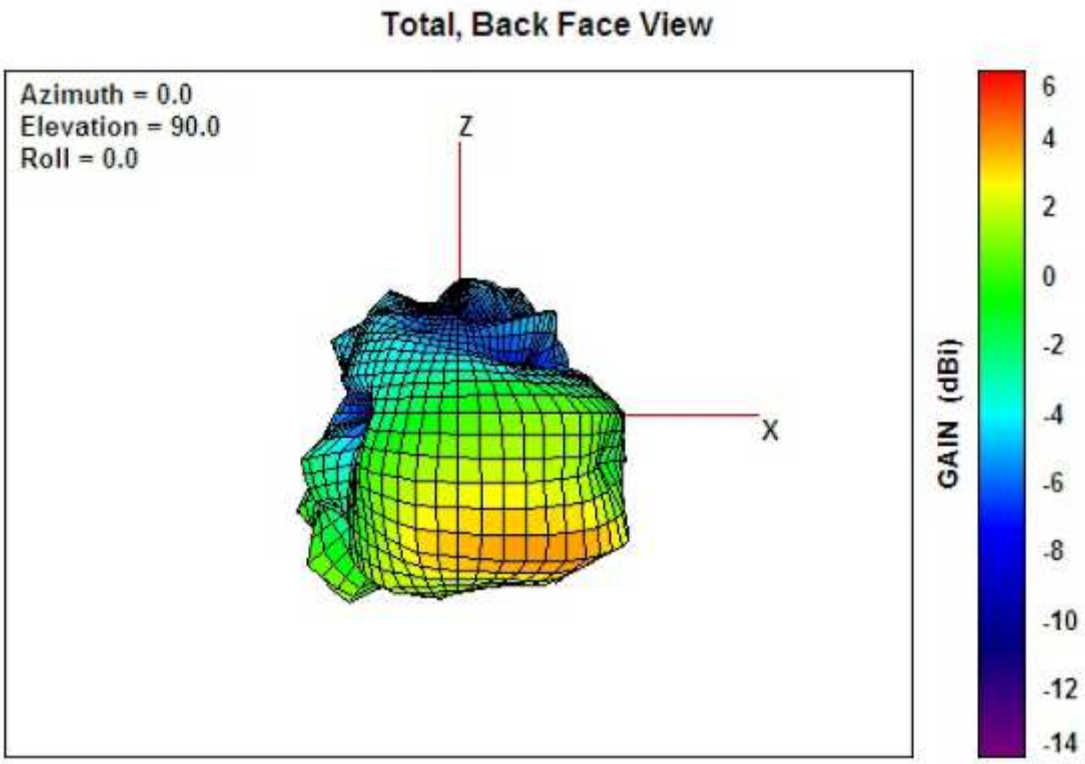

Free-Space Total GAIN, Back Face View, 5800.0 MHz

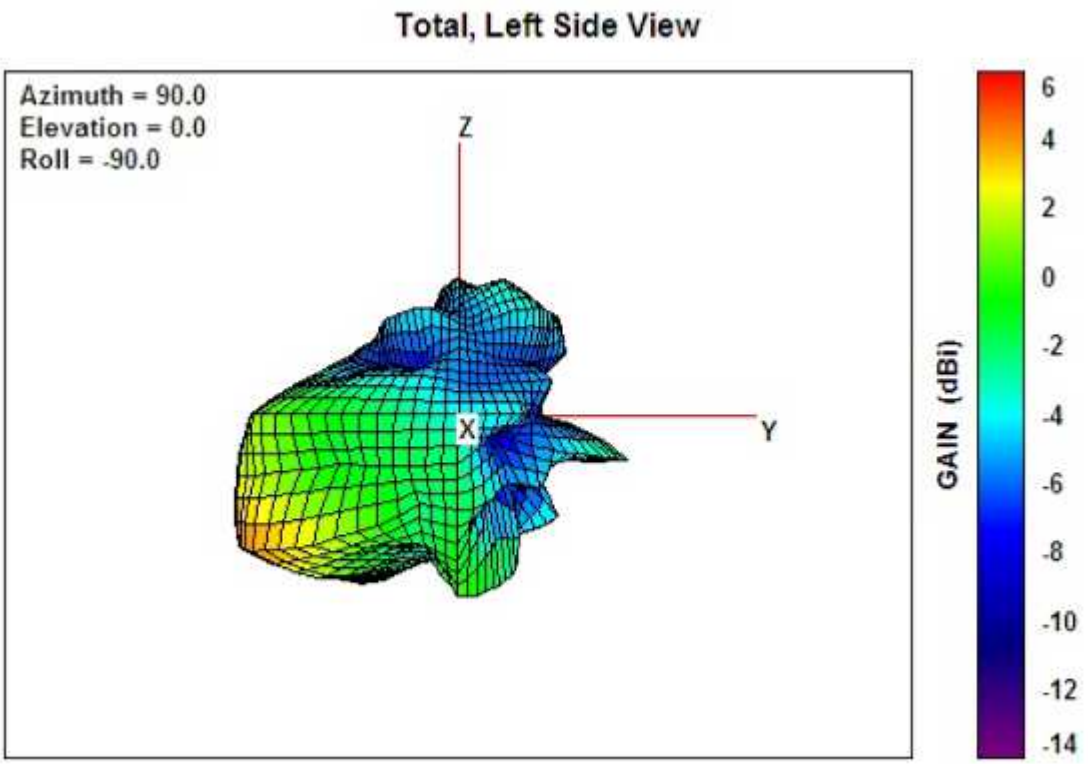

Free-Space Total GAIN, Left Side View, 5800.0 MHz

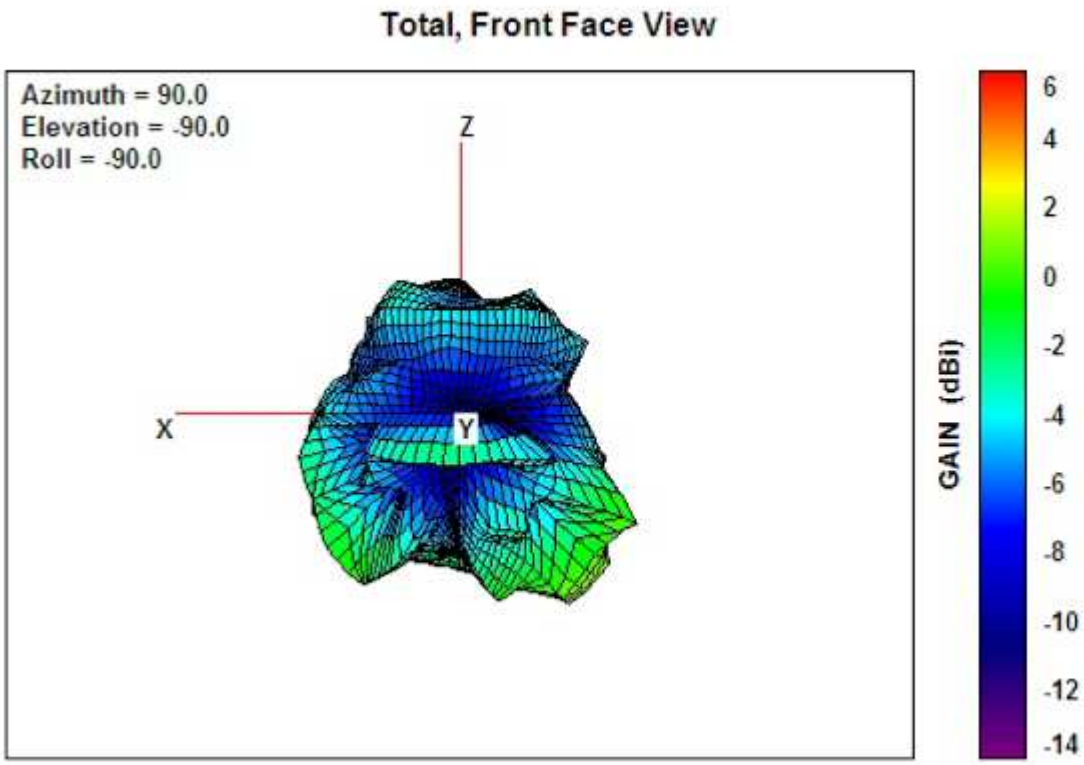

Free-Space Total GAIN, Front Face View, 5800.0 MHz

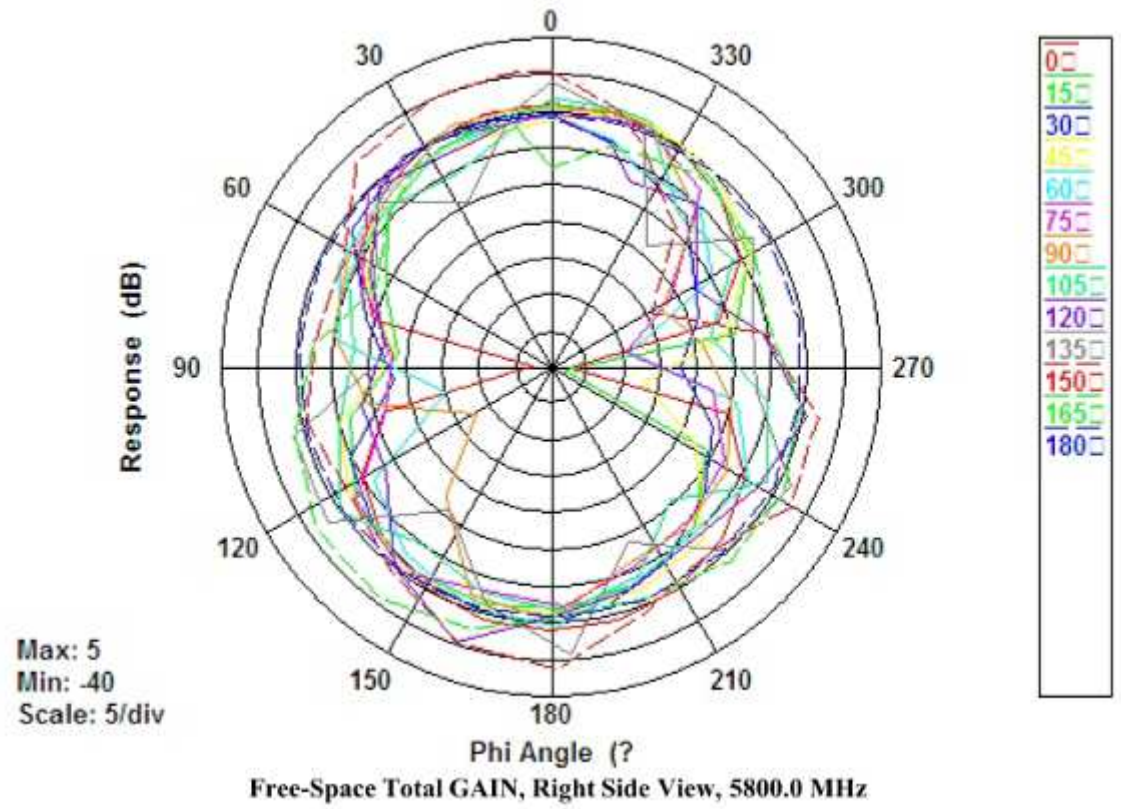

Max Antenna Gain：2.85 dBi

11. Ordering Information

Feature / Model Name	Antenna		Shielding Case		Clip		Ordering Info.	
	PCB	MHF	Without	With	Without	With	Part Number	Description
Model M		●	●		●			IA9Q5 S83D-E Model M TX
Model MC		●	●			●		IA9Q5 S83D-E Model MC TX
Model MS		●		●	●			IA9Q5 S83D-E Model MS TX
Model MSC		●		●		●		IA9Q5 S83D-E Model MSC TX
Model P	●		●		●		1A5UI-IA9Q-24T101	IA9Q5 S83D-E Model P TX
Model PC	●		●			●		IA9Q5 S83D-E Model PC TX
Model PS	●			●	●			IA9Q5 S83D-E Model PS TX
Model PSC	●			●		●	1A5UI-IA9Q-25T101	IA9Q5 S83D-E Model PSC TX

Note: Model Name is the abbreviation of Feature column which is written in bold.
For example **P** is the abbreviation of **P**CB antenna

Table 10

12. Revision History

Date	Revision	Descriptions
2017/07/13	0.1	First release
2017/08/15	0.2	Add Mechanical picture

Table 11

The frequency block is 5725Mhz~5850MHz
Operating Temperature:0°~55°C
Output power: 13.5dBm

The device is restricted to indoor use when operated in the European Community using frequency in 5725Mhz~5850MHz to reduce the potential for interference.
Restriction in BE, BG, CZ, DK, DE, EE, IE, EL, ES, FR, HR, IT, CY, LV, LT, LU, HU, MT, NL, AT, PL, PT, RO, SI, SK, FI, SE, UK.

RF exposure statement
RF exposure information: The Maximum Permissible Exposure (MPE) level has been calculated based on a distance of d=20cm between the device and the human body. To maintain compliance with RF exposure requirement, use product that maintain a 20cm distance between the device and human body.

Declaration of Conformity
Hereby, SYNCOMM TECHNOLOGY CORP declares that the radio equipment type RF 5G Wireless Module is in compliance with Directive 2014/53/EU.
The full text of the EU declaration of conformity is available at the following internet address:
http://www.syncomm.com.tw/index.php/sc/2013-07-31-08-36-54-2

FCC Statement

15.19

1. This device complies with Part 15 of the FCC Rules. Operation is subject to the following two conditions:

(1) This device may not cause harmful interference.

(2) This device must accept any interference received, including interference that may cause undesired operation.

15.21

Note: The grantee is not responsible for any changes or modifications not expressly approved by the party responsible for compliance. Such modifications could void the user's authority to operate the equipment.

15.105(b)

NOTE: This equipment has been tested and found to comply with the limits for a Class B digital device, pursuant to part 15 of the FCC Rules. These limits are designed to provide reasonable protection against harmful interference in a residential installation.

This equipment generates uses and can radiate radio frequency energy and, if not installed and used in accordance with the instructions, may cause harmful interference to radio communications. However, there is no guarantee that interference will not occur in a particular installation. If this equipment does cause harmful interference to radio or television reception, which can be determined by turning the equipment off and on, the user is encouraged to try to correct the interference by one or more of the following measures:

- Reorient or relocate the receiving antenna.
- Increase the separation between the equipment and receiver.
- Connect the equipment into an outlet on a circuit different from that to which the receiver is connected.
- Consult the dealer or an experienced radio/TV technician for help

RF Exposure Statement

This equipment complies with FCC radiation exposure limits set forth for an uncontrolled environment. This equipment should be installed and operated with minimum distance of 20 cm between the radiator and your body.

FEDERAL COMMUNICATIONS COMMISSION (FCC) STATEMENTS

The RF 5G Wireless

Module complies with Part 15 of the United States of America FCC rules and regulations. The Original Equipment Manufacturer (OEM) must comply with the FCC certification requirements.

15.21 Any changes or modifications made to the module without the manufacturer's approval could void the user's authority to operate the module.

ORIGINAL EQUIPMENT MANUFACTURER (OEM) NOTES

- The OEM must certify the final end product to comply with unintentional radiators (FCC Sections 15.107 and 15.109) before declaring compliance of the final product to Part 15 of the FCC rules and regulations. Integration into devices that are directly or indirectly connected to AC lines must add with Class II Permissive Change.

- The OEM must comply with the FCC labeling requirements. If the module's label is not visible when installed, then an additional permanent label must be applied on the outside of the finished product which states: "Contains transmitter module FCC ID: PJH-IA9Q5S83D-E". Additionally,
  the following statement should be included on the label and in the final product's user manual:
  "This device complies with Part 15 of the FCC Rules.
  Operation is subject to the following two conditions: (1) This device may not cause harmful interferences, and (2) this device must accept any interference received, including interference that may cause undesired operation."

This Module is full modular approval, it is limited to OEM installation ONLY.