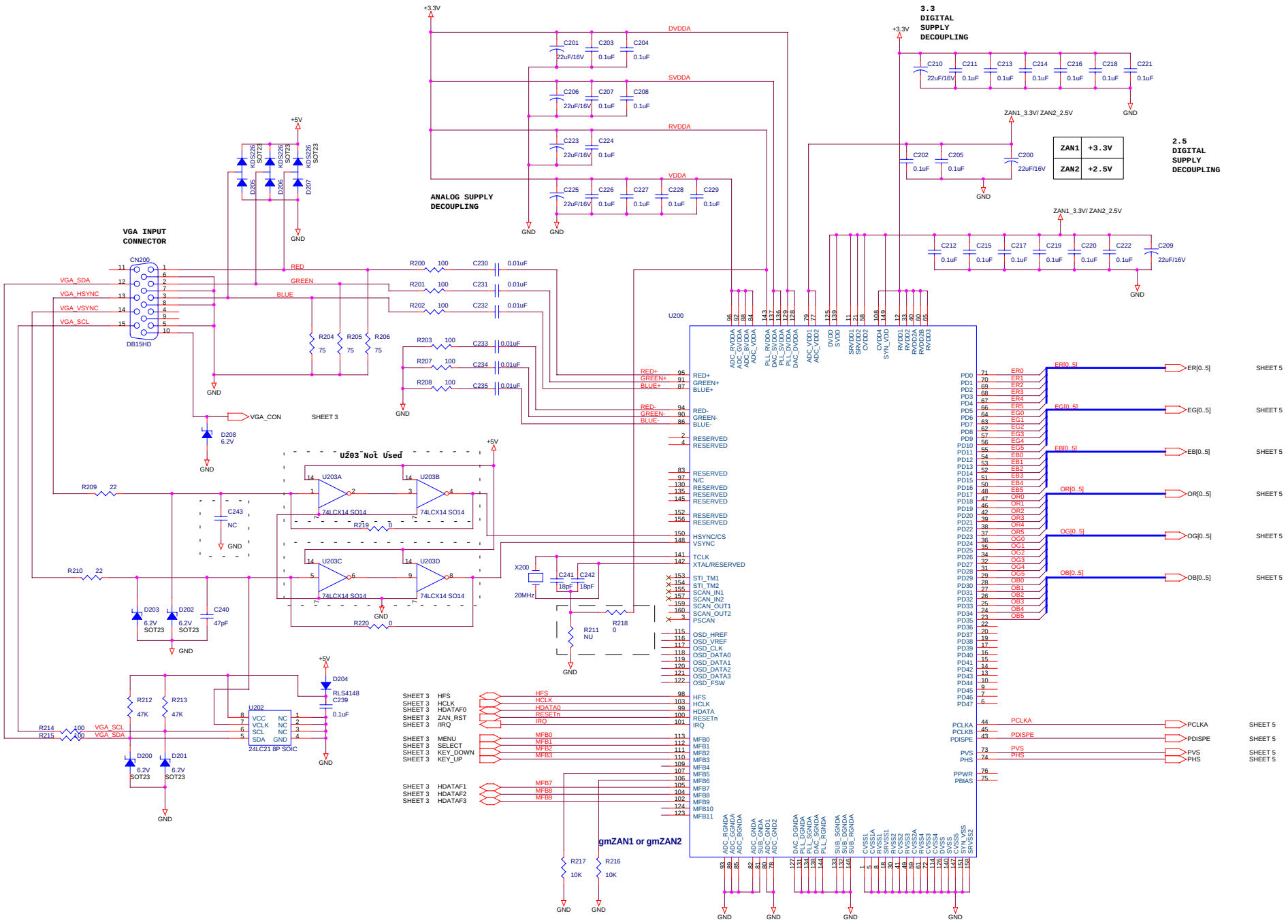

NOTE: ANALOG AND DIGITAL GROUNDS MUST BE INTERCONNECTED AT A SINGLE POINT

Title	2. gmZAN1 or gmZAN2
Size C	Document Number NONE
Rev B	
Date: Friday, January 04, 2002	Sheet 2 of 6

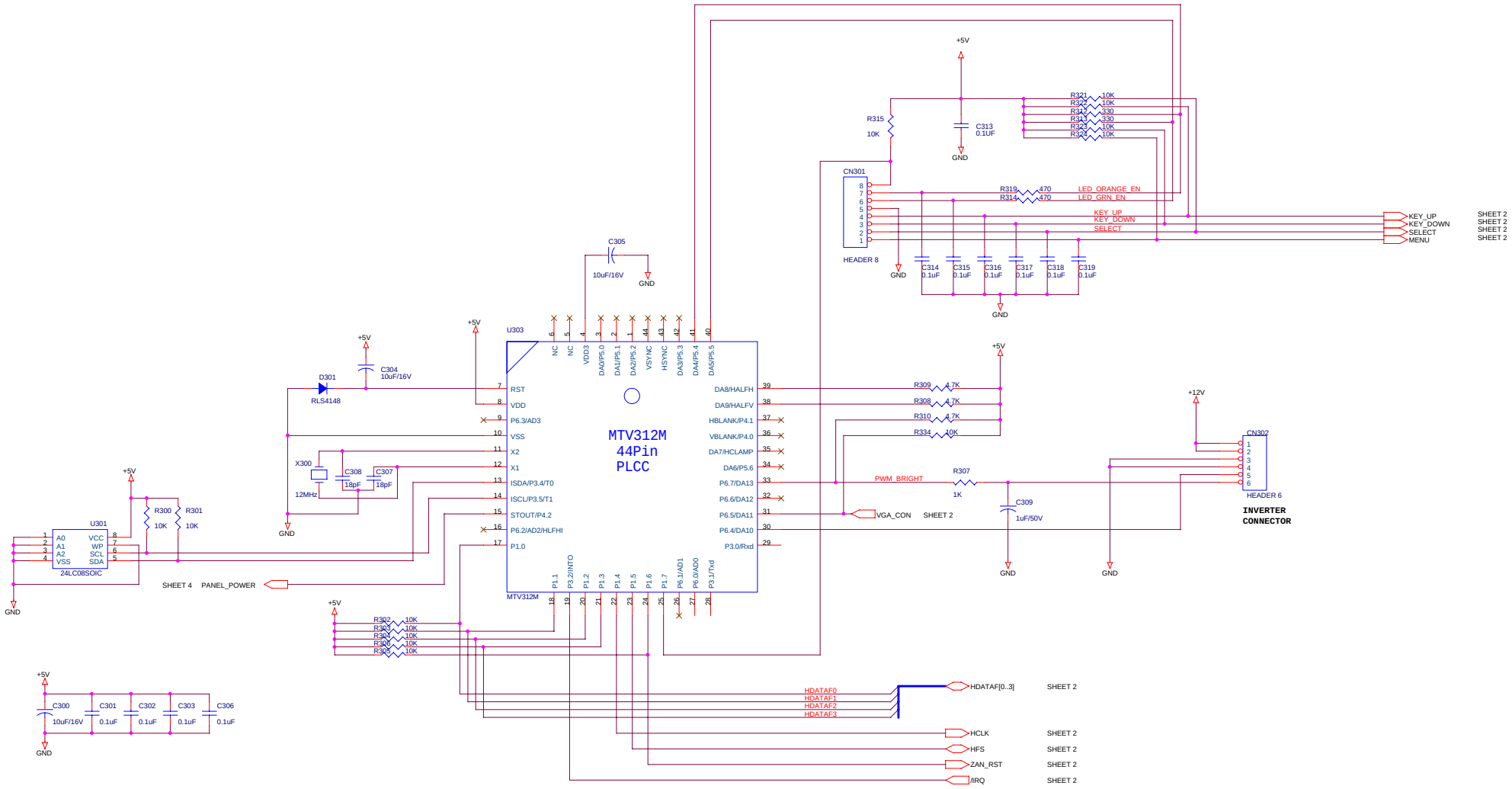

Title	3. MCU(MTV312M)
Size C	Document Number NONE
Rev	B
Date:	Friday, January 04, 2002
Sheet	3 of 6

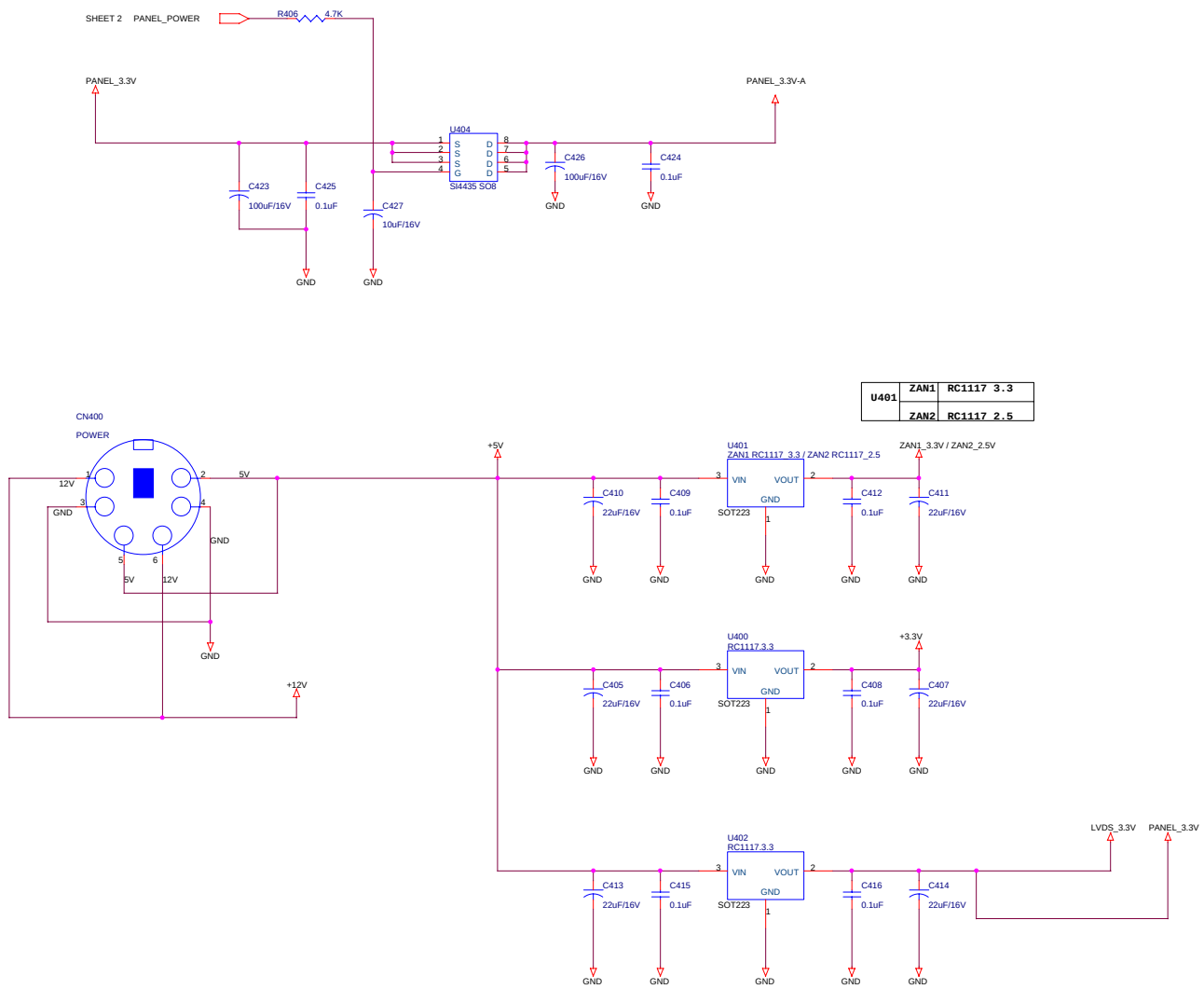

U401	ZAN1	RC1117 3.3
	ZAN2	RC1117 2.5

Title

4. POWER

Size	Document Number	Rev
C	NONE	B

Date: Friday, January 04, 2002 Sheet 4 of 6

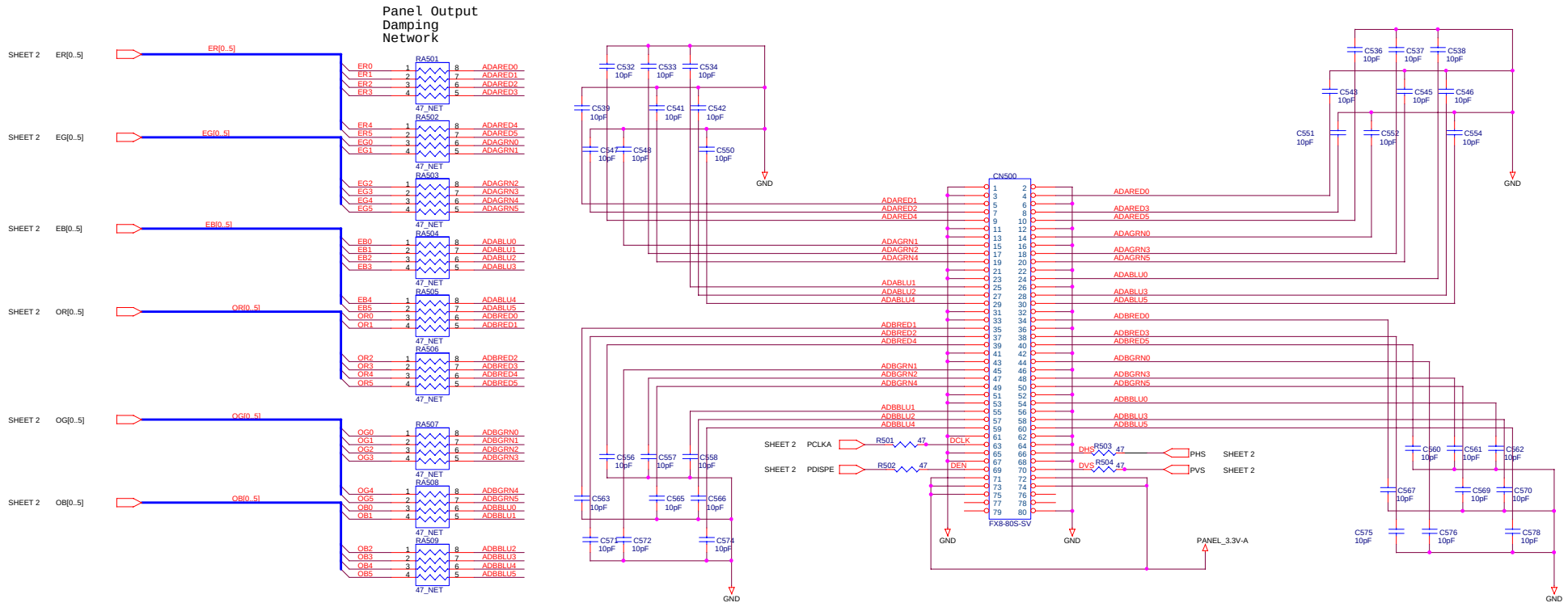

Title	<Title> **Display**
Size C	Document Number <Doc>
Rev B	
Date: Friday, January 04, 2002	Sheet 5 of 6