ATTACHMENT E.

- USER'S MANUAL -

U.S.A.

U.S.FEDERAL COMMUNICATIONS COMMISSION RADIO FREQUENCY INTERFERENCE STATEMENT INFORMATION TO THE USER

NOTE : This equipment has been tested and found to comply with the limits for a Class B digital device pursuant to Part 15 of the FCC Rules.

These limits are designed to provide reasonable protection against harmful Interference in a residential installation.
This equipment generates, uses, and can radiate radio frequency energy and, if Not installed and used in accordance with the instructions, may cause harmful Interference to radio communications.
However, there is no guarantee that interference will not occur in a particular Installation.
If this equipment does cause harmful interference to radio or television reception, Which can be determined by turning the equipment off and on, the user is encouraged to try to correct the interference by one or more of the following measures:

- Reorient or relocate the receiving antenna.
- Increase the separation between the equipment and receiver.
- Connect the equipment into an outlet of a circuit different from that to which the receiver is connected.
- Consult the dealer or an experienced radio/TV technician for assistance.

Changes or modification not expressly approved by the party responsible for Compliance could void the user's authority to operate the equipment.
Connecting of peripherals requires the use of grounded shielded signal cables.

Important Tip

Image Retention Effect (Image Sticking)

1. Cause :

- Image Retention Effect may come from displaying a still picture in certain period of time with at a certain area continuously, as the feature of LCD panel. This is caused due to brightness degradation. Many LCD manufacturers are trying to overcome this limitation.

2. Prevention

- To avoid this matter, use the product after reducing brightness and contrast, especially when a still image is displaying for a long time. (Contrast 50/Brightness 50 - *See 32 page)*

Once image retention occurs, use the mode that displays more motion pictures. It will help reduce this matter.

3. Solution

- The temporary image sticking would decrease with displaying Full-White pattern during 10 hours.

* The permanent image sticking could not take off under the latest technology.

This method may be used to eliminate a temporary retained image that occurs after displaying a still image for a certain period of time. Since it may take several minutes to several hours to remove image sticking, it is recommendable to display motion pictures during 2~3 minutes every hour when keeping displaying a still image. As image sticking is influenced by the brightness of a still image being displayed and its display time, it is recommended that you reduce the brightness of the screen when displaying a still image for a long time.

* Image Sticking does not come under the warranty.

Image Sticking Precaution

When watching a still Image within motion pictures and Panorama/Wide/4:3 screen

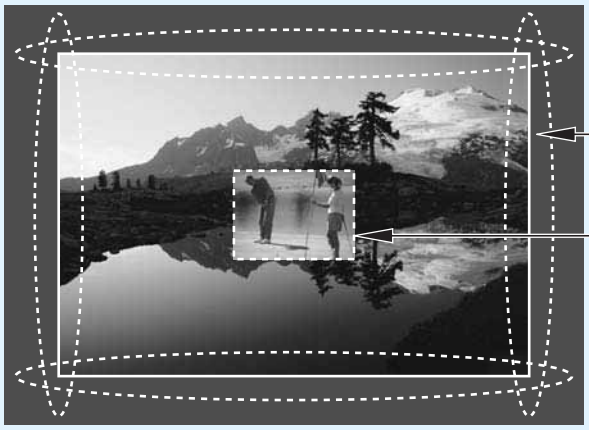

1. Note :

- When the central area of the screen and the screen edges are fixed, the different brightness level of the edges may cause image retention on the edges when watching for a long time
- This phenomenon is the same matter to other LCD manufacturers. Please do not watch a still image for a long time.
- If you watch a still image for a long time, this may damage your TV.

* This matter does not come under the warranty.

Features

Dual Scan/Multi-Viewing
You can program analog TV broadcasting and digital TV broadcasting automatically at the same time for multi-viewing.

A Wide Array of Screen Settings
You can choose different screen settings depending on the type of program you are watching or the surrounding conditions (the outside weather conditions). You can switch among Standard, Dynamic, Movie, and Mild options or you can configure the screen settings for yourself.

A Wide Array of Sound Settings
You can choose an optimal sound setting for the type of program you are watching.
You can switch among Standard, News, Music, and Sport options or you can configure the sound settings for yourself.

TV Program Reservation
If you reserve a digital TV program you are going to watch, the channel you are currently watching is automatically switched to the reserved channel.

Favorite Channel Memory
You can memorize the channels you are watching frequently.

SRS TrueSurround XT
You can enjoy dynamic and surround sound with ordinary speakers.

Dolby-Digital
When receiving digital broadcast signal, you can enjoy dynamic and surround sound with two ordinary speakers just like Dolby 5.1.

A Variety of Aspect Ratios
You can adjust the screen size at your preference.

Auto On/Off Function
This function allows you to turn on or off your TV at the preset time.

Game Prevention Function
This function is designed to prevent a VCR or game player from being connected to the TV.

Memory Card Support
You can enjoy photo images, music files and movies by inserting a variety of memory cards.

Table of Contents

Safety Precaution

The contents of this section are provided for the safety of users and their property.
Please read the instructions carefully before using.

⚠ WARNING

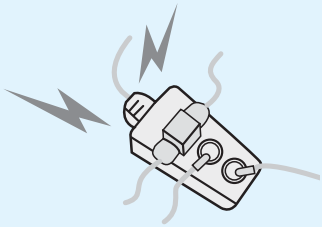

Do not connect multiple electrical appliances to a single outlet.
- It may cause a fire due to overheating from the outlet.

If there is a persistent accumulation of dusts or water on the plug, please make sure to wipe it off using a dry cloth. .
- It may cause a fire or an electric shock.

⚠ WARNING

Do not put a water bowl, vase, candle, bug repellant smoke, cigarette, plants, or heavy thing on the TV.
- It may cause electric shock or fire and also heavy things may cause injury when they fall.

Do not install in a place where there is oil, smoke, excessive humidity, or where water may be sprinkled on it.
- This may cause electric shock or fire.

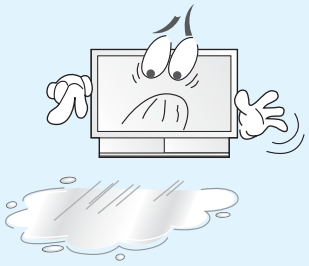

Safety instructions are divided into "Warning" and "Alert". Their meanings are as follows.

⚠ This icon is intended to alert the user to the presence of potential danger and important operating instructions.

⚠ WARNING : When there is a possibility of serious injury if not observed.

⚠ ALERT : When there is a possibility of slight injury or product damage if not observed.

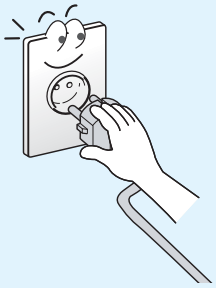

Firmly plug in the power cord so that it does not pull out.
- An unstable connection may cause fire.

Do not use a damaged power cord or plug, or loose outlet.
- It may cause electric shock or fire.

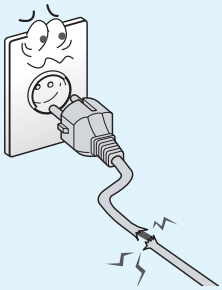

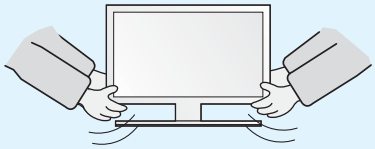

Make sure to remove the speakers before moving the TV with speakers mounted on it.
- When the speakers are detached from the unit while carrying it, this may cause damage to the unit or personal injury.

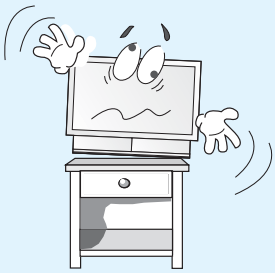

Do not install on an unstable place or small support.
- This may cause the TV to fall, resulting in serious injury to a child or adult.

Do not use or store a flammable spray or inflammable things near the TV.
- They may cause explosion or fire.

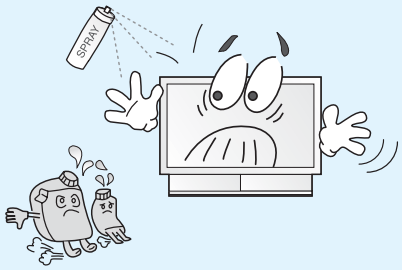

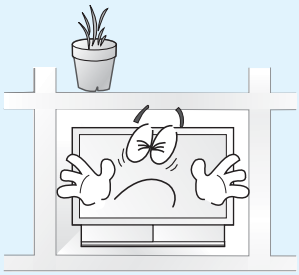

Do not install the TV in a bookshelf, closet, or a place where there is poor air circulation.
- Fire may be caused due to the rise of internal temperature.

Safety Precaution .....*Continued from previous page*

The contents of this section are provided for the safety of users and their property.
Please read the instructions carefully before using.

⚠ WARNING

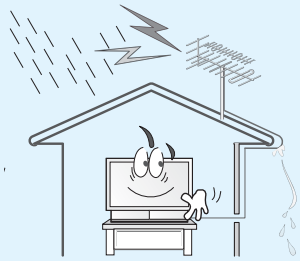

Any necessary action such as making the antenna cable loop at the entrance of the building should be taken to prevent rainwater on the outdoor antenna cable from possibly running into the indoor.
- If raindrop gets into the LCD TV, it may cause a fire or an electric shock.

Never attempt to open, fix, or modify your TV.
- When there is a need for fixing, call a service center. Fire or electric shock may be caused.

⚠ WARNING

Do not place any heat sources such as radiators and heat registers, etc. near the TV.
- It may cause a fire.

Do not block ventilating slits with a table cloth.
- Blocking the ventilation slits may produce inner heat increase, resulting in a fire.

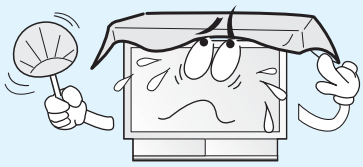

Safety instructions are divided into "Warning" and "Alert". Their meanings are as follows.

⚠ This icon is intended to alert the user to the presence of potential danger and important operating instructions.

⚠ WARNING : When there is a possibility of serious injury if not observed.

⚠ ALERT : When there is a possibility of slight injury or product damage if not observed.

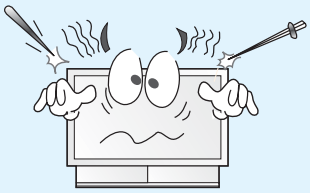

Do not put a metallic object like chopstick, wire, or puncher or inflammables like paper or a match in a vent, headphone jack, or AV jacks of the TV.
- Electric shock or fire may be caused.

When the TV produces abnormal noise, burning smell, or smoke, unplug the TV immediately and call a service center.
- Electric shock or fire may be caused.

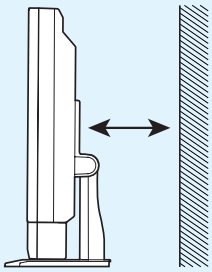

Keep the TV at least 10cm away from the wall for ventilation.
- Fire may be caused due to the rise of inner temperature.

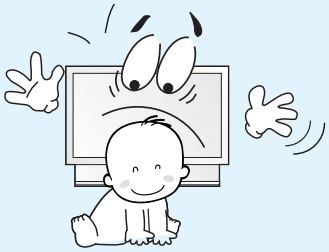

Do not install the product on the floor.
- If it falls over, your child may be injured.

Unplug the product during lightning or thunderstorms and never touch the antenna cable.
- It may cause a fire or an electric shock.

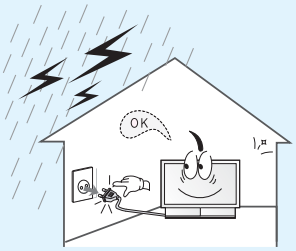

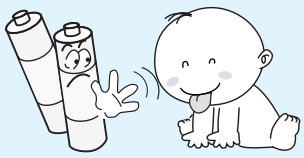

Keep the remote control batteries out of sight and out reach of children.
- If your child swallows a battery, see your doctor immediately.

Safety Precaution .....*Continued from previous page*

The contents of this section are provided for the safety of users and their property.
Please read the instructions carefully before using.

WARNING

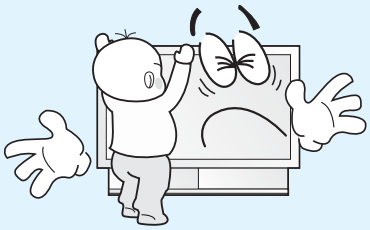

Do not place toys and cookies, etc. on the TV, which may attract children's attention.
- If it falls over on children, it may cause serious injury.

Do not allow children to climb or play on the TV.
- If it falls over on children, it may cause serious injury.

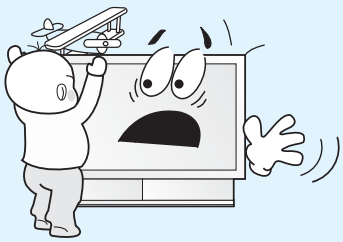

ALERT

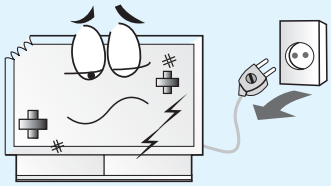

Unplug when you do not use your TV for a long time.
- If dust is stacked on the TV, electric shock or fire may be caused from heat, fire, or deterioration of insulation.

In the event of damaging or dropping the product, switch off the power and remove the plug.
- Using a damaged product may cause an electric shock or a fire.
- Contact your local service center.

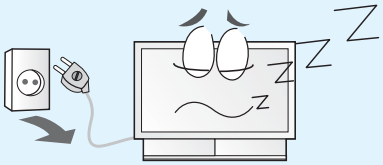

Safety instructions are divided into "Warning" and "Alert". Their meanings are as follows.

⚠ This icon is intended to alert the user to the presence of potential danger and important operating instructions.

⚠ WARNING : When there is a possibility of serious injury if not observed.

⚠ ALERT : When there is a possibility of slight injury or product damage if not observed.

When cleaning the TV, make sure to disconnect the power plug and use a dry, soft cloth for a cleanup.
- Please avoid using chemicals such as wax, benzene, alcohol, thinner, mosquito spray, air freshener, lubricant or synthetic detergent.

When replacing batteries, make sure to match the batteries to the (+) and (-) marks in the battery compartment.
- Mismatching of polarities may result in internal damage to batteries, fire due to leakage or contamination.

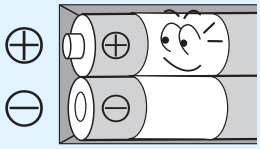

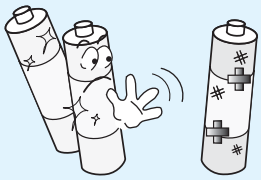

Always use the standard batteries and avoid using old batteries together with new ones.
- Otherwise it may result in internal damage to batteries, fire due to leakage or contamination.

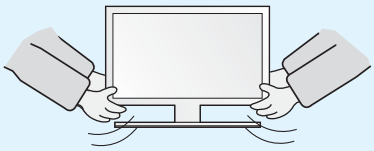

When moving the TV, two or more people are advised to carry it.
- Injury or damage may be caused when the TV falls.

Consult a service center or customer service for inside cleaning about once a year.
- When dust is piled inside the TV for long time, fire or malfunction may be caused.

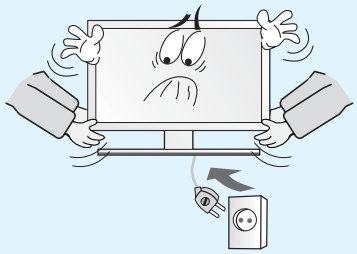

Before moving the product, ensure to switch off the power and unplug all the electrical cords and the external connection cords such as an antenna cable and other source connections, etc.
- An electrical cord(s) may be damaged, resulting in a fire or an electrical shock.

Contents of the Package

When opening the package, please ensure to check the following accessories provided.

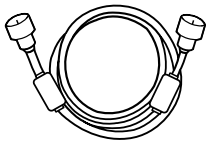

Antenna Cable
(coaxial cable)

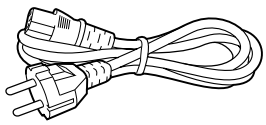

Power Cord

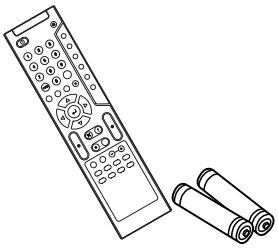

Remote Control & 2 batteries
(1.5V AAA)

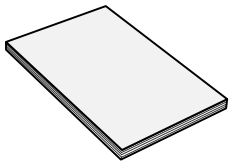

User's Guide

Products Sold Separately

If you want to purchase separately sold products, consult a service center, electronics shops, or parts seller.

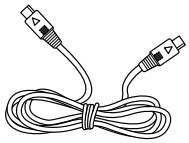

S-video Cable

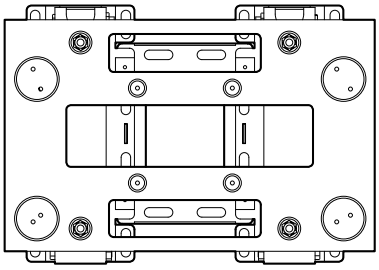

Wall Mounting Support

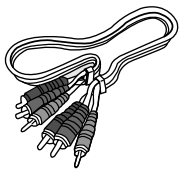

Component Cable
(Y, Pb, Pr)

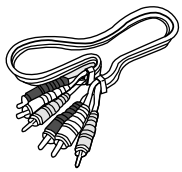

Composite Cable
(Video/Audio)

Audio Cable (DIV/DVD)

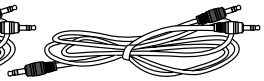

Audio Cable (PC)

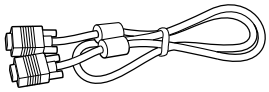

PC signal Cable (D-SUB)

Kensington Lock Anti-theft Device

- This display unit supports Kensington standard security lock to prevent theft.
- You should purchase the Kensington lock device personally, if you need. The security lock is available at an electronics shop.
- For more information, please refer to the following contact information..

*** Kensington Technology Group**

- Address : 2000 Alameda de las Pulgas 2F san mateo, California 94403-1289
- Tel : +1 650 572 2700 • Fax : +1 650 572 9675 • Web-site : www.kensington.com

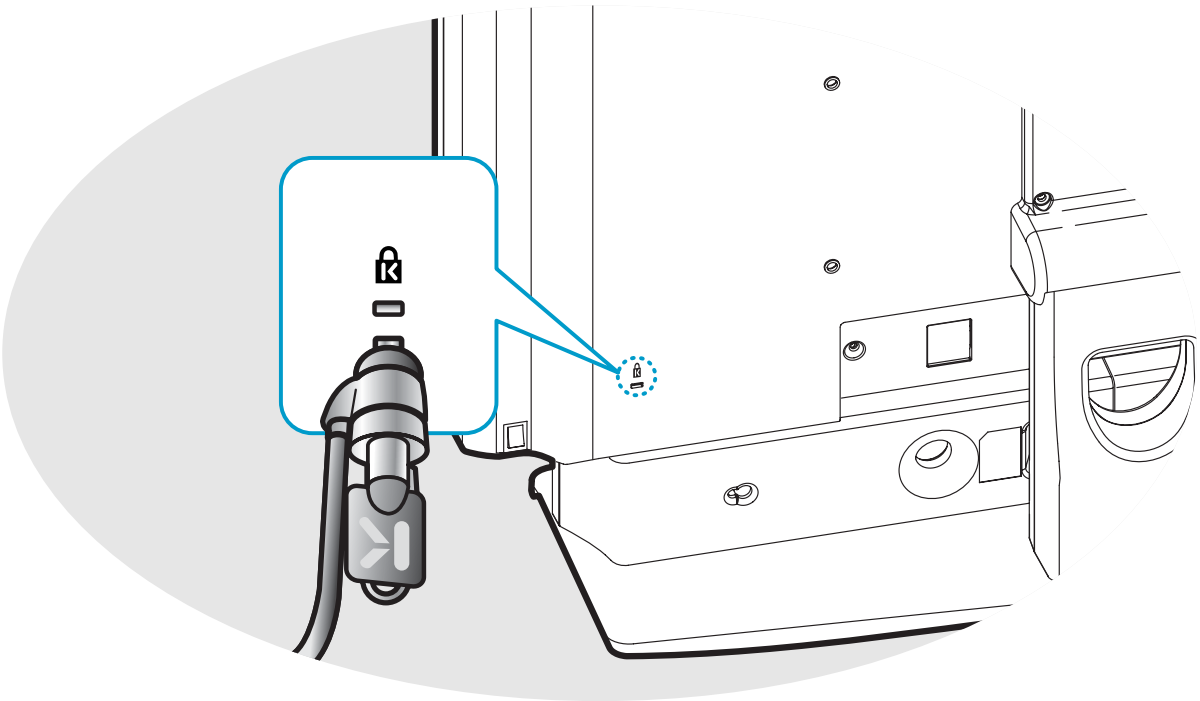

How to Mount and Detach The Speakers

You can attach the speakers to the base of the unit or use them separately.

How to mount the speakers onto the base of the unit

1. Tilt the unit backward until its base faces to yourself (See page 12 How to adjust the view angle).
2. Lift up the hooks on the speaker.
3. Align the speaker hooks with the cavity holes.
4. Slide speakers inward to attach securely as shown in Figure below.

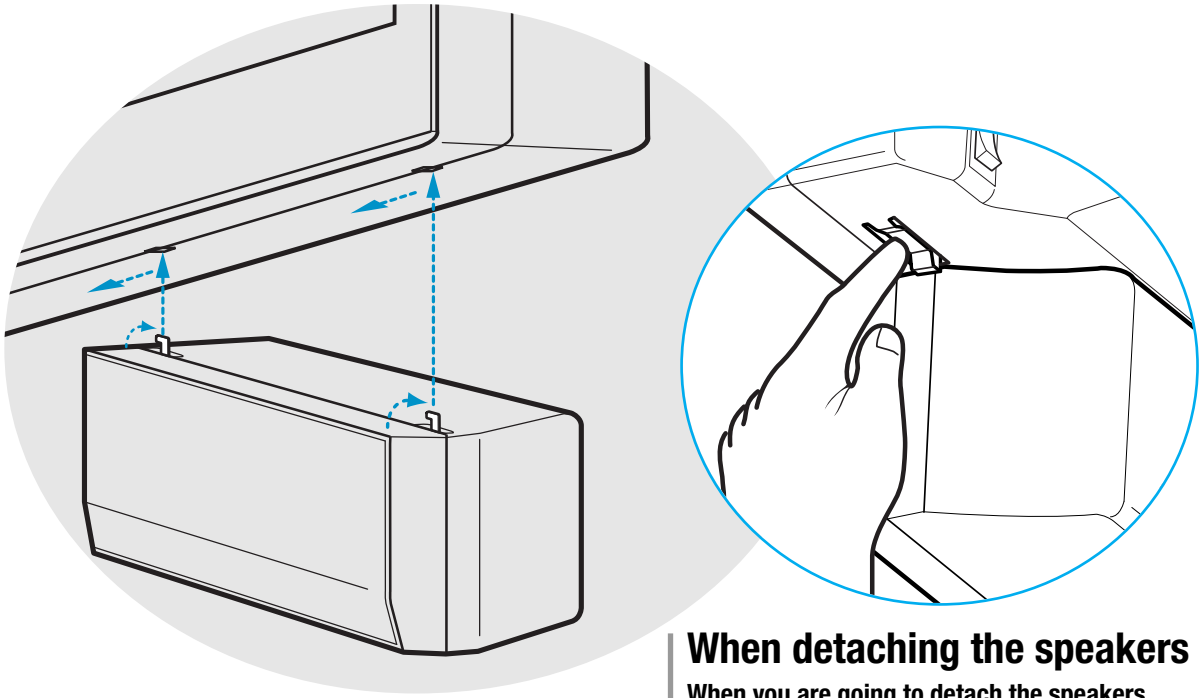

When detaching the speakers

When you are going to detach the speakers, press the tension hook and remove the speakers in reverse order as shown in the above figure.

WARNING The provided speakers are designed for this product only. It is recommended not to connect the speakers to other device. When connecting other amplifier, the amplifier output should be within 10W. The output that exceeds 10W may cause fire.

ALERT Make sure to remove the speakers before moving the TV. When the speakers are detached from the unit while carrying it, this may cause damage to the unit or personal injury.

How to adjust the view angle

You can adjust the panel downward or upward at a 0~15 degree angle.

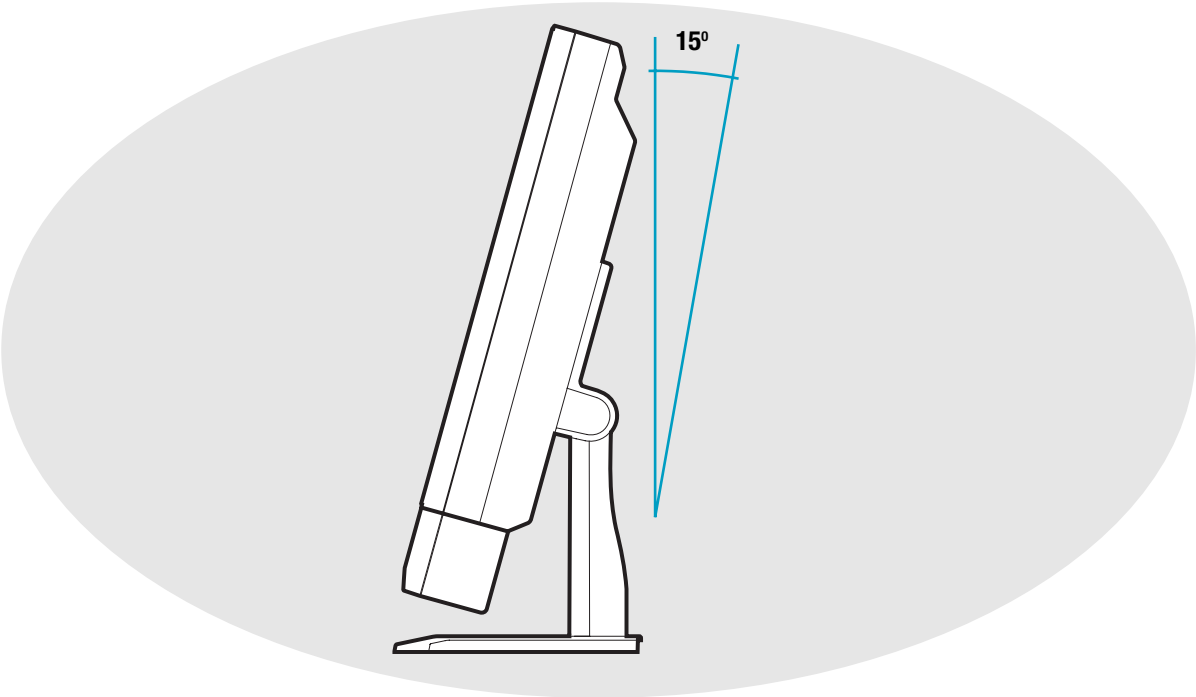

How To Install Wall Mount Support

1. Caution

1. Install on the vertical wall surface only.
2. Do not install on the following places to protect the performance of LCD TV and to prevent malfunction.
   - Near sprinkler detector - Near heating devices - Places where vibration or shock may be applied
   - Near high-voltage power line
3. Wall mounts must not be mounted to surfaces or building materials that cannot support the wall mount.
   If the wall is not strong enough to stand the weight of TV set, reinforce the wall surface before installation.
4. Do not install within a wall.

2. Accessories

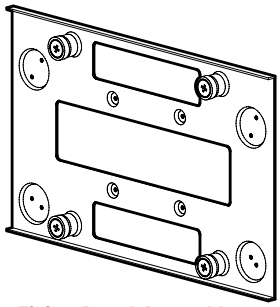

Fixing Panel Assembly

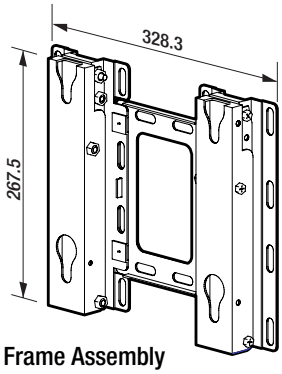

Base Frame Assembly

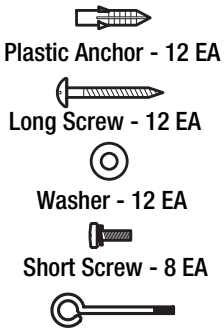

※ *The above image may look different from the real product.*

3. Angle Adjustment (Optional)

The wall mount bracket allows you to adjust the angle of TV from 0 degree to 20 degree on a 5 degree basis. When adjusting the angle, use the holes on the side of the bracket.

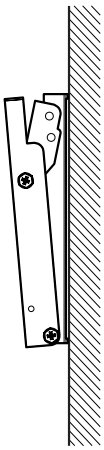

5° angle

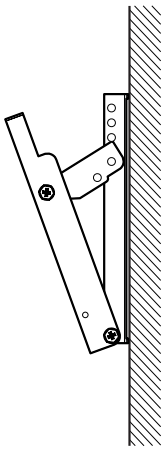

20° angle

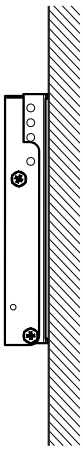

No angle

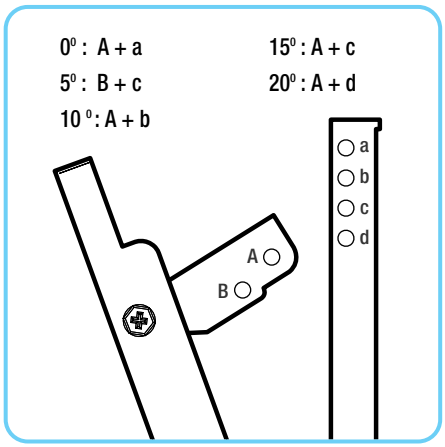

Holes for angle adjustment

4. Installation Method

1. Unscrew the screws fastened on 4 spots on the stand of TV.

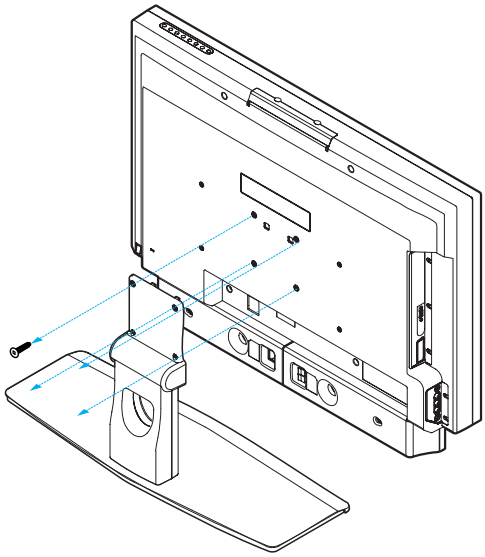

3. Fix the Base Frame Assy on the wall with screws or nails.

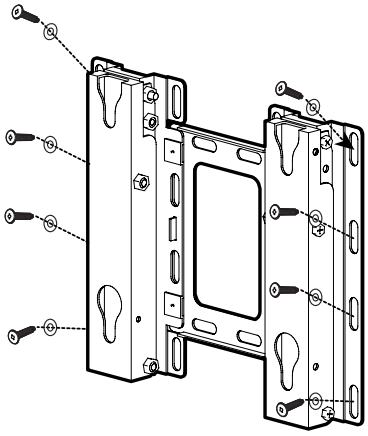

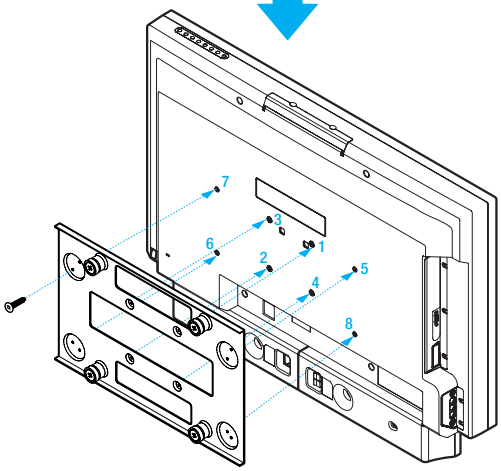

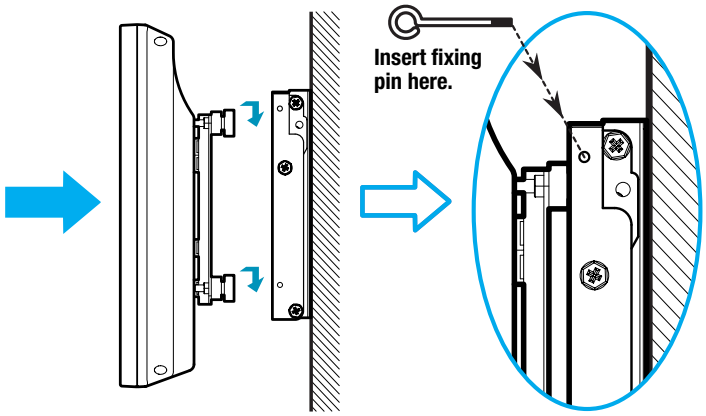

2. Fasten the Fixing Panel Assembly on the back of panel as shown on the Figure (Tighten the screws in order of the number shown in the Figure).

4. Hook the Fixing Panel Assy with the LCD TV attached on the Base Frame Assy. Use the fixing pin to ensure that the TV is secured.

Parts Names and Functions

Front View

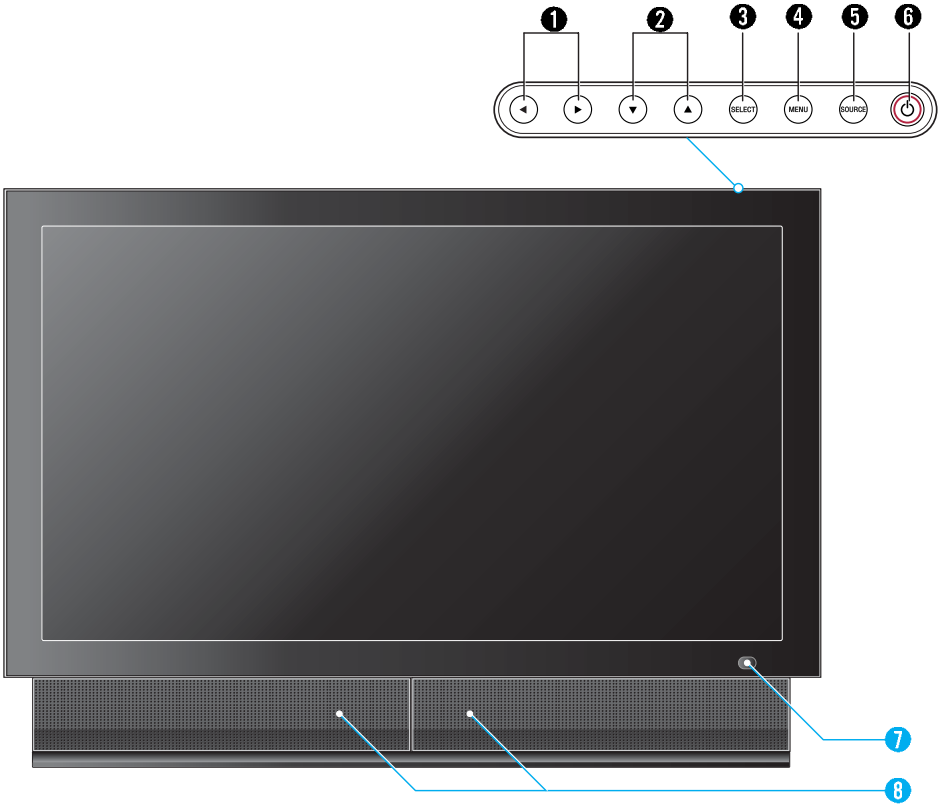

* This product image may be a bit different from the actual product.

❶ **Volume buttons**
Use these buttons for your desired sound level. These buttons also serve as the cursor of Select/Adjust when in Menu mode.

❷ **Channel buttons**
Use these buttons to change channels. These buttons also serve as the cursor of Down and Up buttons when in Menu mode.

❸ **Select button**
Use this button to select each item of menu.

❹ **Menu button**
Use this button to display or exit from menus.

❺ **Source button**
Use this button to switch among inputs connected to the TV.

❻ **Power button**
Use this button to turn on or off the TV.

❼ **Remote sensor and power LED.**
- Point the remote control toward here.
- It displays standby or operation status.

- Power Indicator Status -

Indicator	Status
Red	Standby
Green	Power on

❽ **Remote sensor and power LED.**
See page 13 for information on how to mount speakers.

Rear View

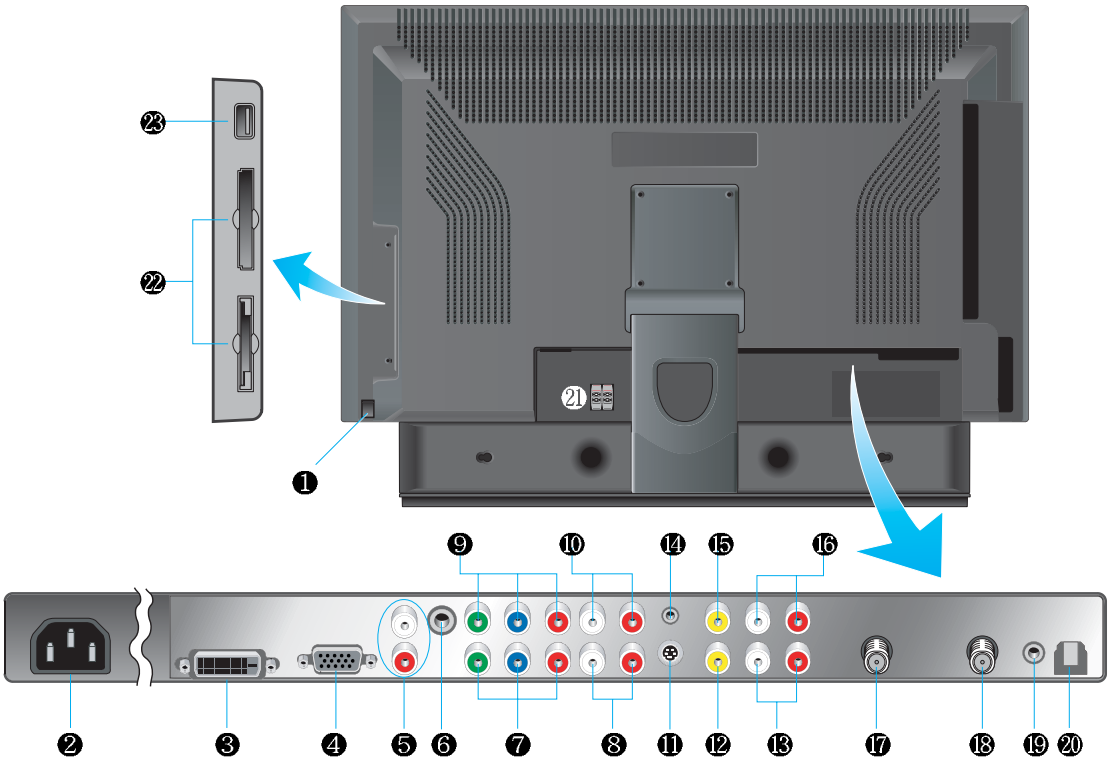

* This product image may be a bit different from the actual product.

❶ **Power switch**
Use this switch to turn on/off power.

❷ **Power (AC) input terminal**
Connect the power cord to this terminal.

❸ **DVI Video input terminal**

❹ **D-SUB input terminal**

❺ **DVI/D-SUB Audio input terminal**

❻ **Subwoofer output terminal**
When producing bass, connect the cable to the woofer with *AMP.

❼ **Component 2 Video input terminal**

❽ **Component 2 Audio input terminal**

❾ **Component 1 Video input terminal**

❿ **Component 1 Audio input terminal**

⓫ **S-Video input terminal**

⓬ **Video input terminal**

⓭ **S-Video/Video Audio input terminal**

⓮ **RS-232 input terminal**
Connect to the RS-232 terminal of a PC to check its service.

⓯ **Monitor Video output terminal**

⓰ **Monitor Audio output terminal**

⓱ **Antenna 1 (Analog/DTV) input terminal**

⓲ **Antenna 2 (DTV) input terminal**

⓳ **Digital Audio output terminal for coaxial cable**

⓴ **SPDF optical digital audio output terminal**

㉑ **Speaker terminal**
Connect your speaker jacks

㉒ 메모리카드 슬롯

㉓ USB 입력단자

㉒+㉓ Q320 모델에 한함.

Remote Control

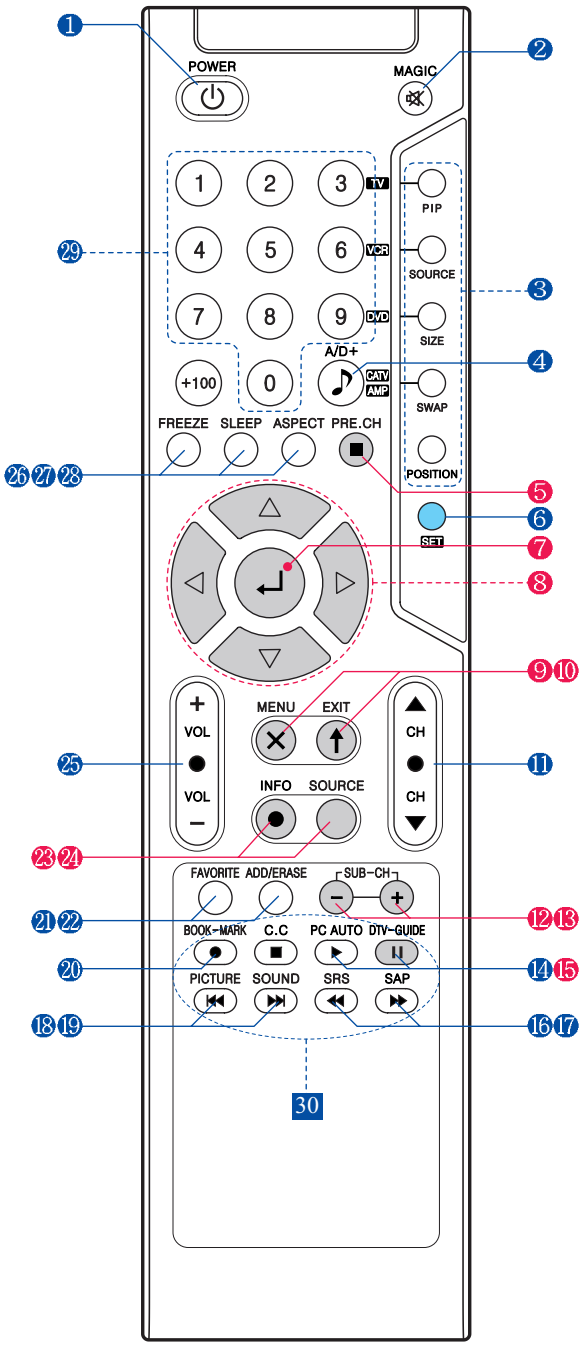

1. POWER/STANDBY

2. MUTE

This button is also used when setting up to use other **external device.**

3. PIP FUNCTIONS

- PIP
  : Use this button for PIP On/Off.
- INPUT
  : Use this button to select the input source of sub-picture.
- SIZE
  : Use this button to select the size of sub-picture.
- SWAP
  : Use this button to swap main and sub-picture.
- POSITION
  : Use this button to select the position of sub-picture.

4. A/D+

Use this button to switch analog input signal to digital signal.

5. Previous Channel

Use this button to return to the previous channel.

6. Other external device selection (➔ 71P)

7. MENU SELECTION

Use this button to select menu items.

8. LEFT/RIGHT MOVE/ADJUST

Use these buttons to move between menu items or to adjust each item.

9. MENU

Use this button to call the OSD to the screen.

10. EXIT

Use this button to end the OSD.

11. CHANNEL SELECTION

Use this button to select the channel.

12-13. SUB-PICTURE CHANNEL SELECTION

14. PC AUTO

Use this button to automatically adjust the screen in PC Mode.

15. DTV-GUIDE

Use this button to see digital broadcast information.

16. SRS

Use this button to select 3D surround sound.

17. SAP

Use this button to listen in a foreign language or in Stereo Mode.

18. PICTURE MODE
19. SOUND MODE
20. BOOK-MARK
Use this button to select/deselect your frequently-used channel.
21. FAVORITE
Use this button when watching your favorite channel.
22. ADD/ERASE
Use this button to add or erase channels.
23. INFOMATION
Use this button to display resolution or various program information.
24. SOURCE
Use this button to select External Input or Memory Mode.
25. VOLUME
26. STILL
27. SLEEP
28. ASPECT RATIO
Use this button to change the picture size.
29. NUMERIC KEYS
30. Use this buttons to use other manufacturer's DVD or VCR.

Using buttons when in Memory Mode

➔ The following buttons are used differently in each menu. (See pages 65~70 for more details.)

❹ Power Saving Function when listening to music
❺ Music Playback Setting (Repeat 1, Repeat All, Sequence)
❼ Select, Start, Pause/Playback
❽ Move between file listings, Previous Track/Next Track, Reverse/Fast Forward, Photo Rotation
❾ Exit, Cancel
❿ Eject Card
⓬ Slide Show
⓭ Zoom In
⓯ Check Version (Initial Screen), Check Running Time (Movie Mode)
㉓ Hide Menu
㉔ SOURCE When Shifting into Memory Mode

➔ Other buttons available in Memory Mode
⓰ ⓱ ⓲ ⓳ ㉗ ㉘

How to Insert Batteries in Remote Control

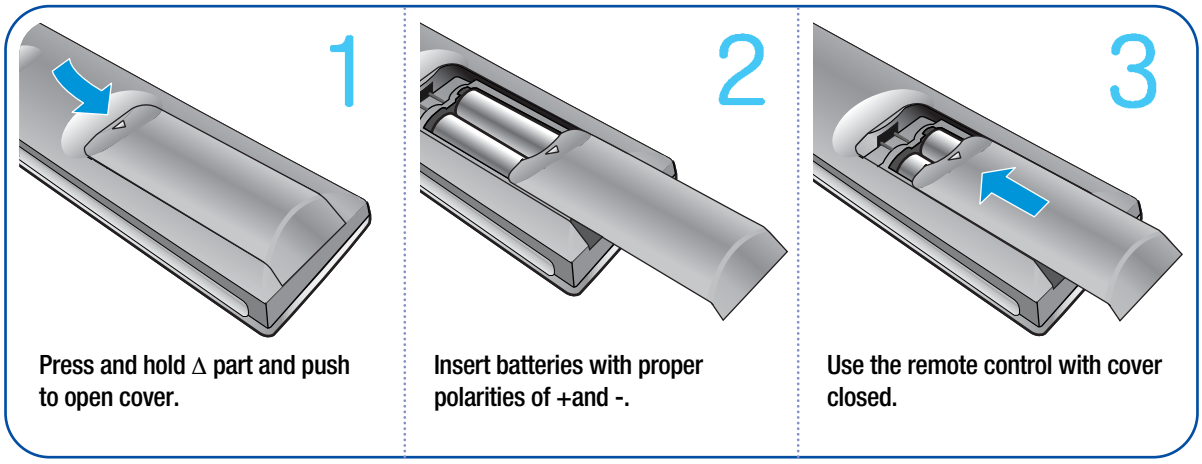

Press and hold △ part and push to open cover.

Insert batteries with proper polarities of +and -.

Use the remote control with cover closed.

* Battery type :1.5V/AAA

How to Watch Both Analog and Digital Broadcasts with a Single Antenna

Connection Method

You can watch both analog and digital broadcasts by connecting a single antenna.
➔ Make sure that the antenna cable is connected to ANT 1 (ANALOG/DTV).

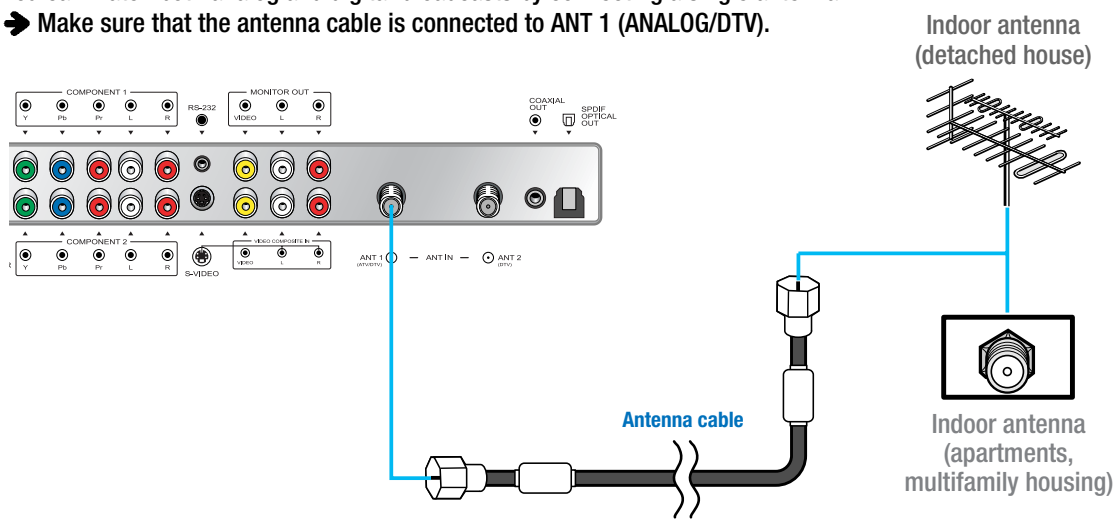

TIP
- When inserting a 75 Ω ohm coaxial cable into the input connection, ensure the wire tip not to bend.
- If you experience poor signal reception, we recommend you purchase a signal amplifier for better picture quality.

How to Watch

1 Turn on TV to activate Auto Channel (See page 49) to memorize the available channels.

2 Press SOURCE INPUT on remote control.

3 Press to move to Analog TV or Digital TV and press to select.

4 Press button or button to select the desired channels.

Ex.) When you want to watch cable channel number 120, press +100 + 2 + 0 the digit buttons.

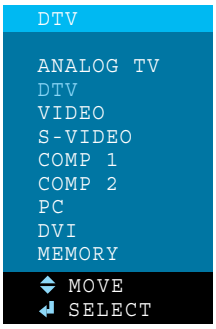

TIP
While watching digital broadcast, you can switch a digital signal to an analog signal by pressing the A/D+ button.

How to Watch Both Analog and Digital Broadcasts with Two Antennas

Connection Method

Connect an analog antenna to ANT 1 terminal for analog source and a digital antenna to ANT 2 terminal for digital source. Please ensure to connect an antenna to a correct terminal. (If you connect an analog antenna cable to ANT 2, you cannot watch TV program.)

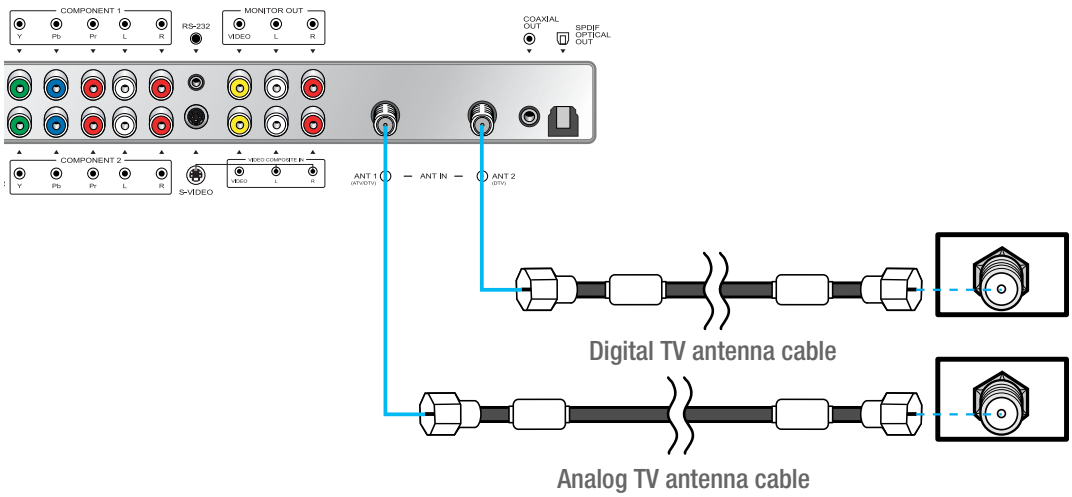

TIP

- When inserting a 75 Ω ohm coaxial cable into the input connection, ensure the wire tip not to bend.
- If you experience poor signal reception, we recommend you purchase a signal amplifier for better picture quality.

How to Watch

1 Turn on TV to activate Auto Channel (See page 49) to memorize the available channels.

2 Press SOURCE INPUT on remote control.

3 Press to move to Analog TV or Digital TV and press to select.

4 Press button or button to select the desired channels.

Ex.) When you want to watch cable channel number 120, press +100 + 2 + 0 the digit buttons.

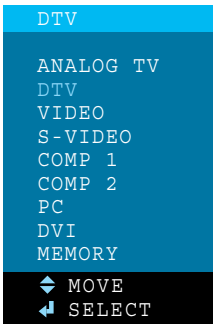

TIP

While watching analog broadcast, you can switch an analog signal to a digital signal by pressing the A/D+ button.

Before Connecting the Video/Audio Connections to External Devices...

Please make sure to read the following information on connection to enjoy best picture quality.

Video/Audio connectors

Types of video/audio cable :

① DVI-D ② 15-Pin D-Sub ③ COMPONENT ④ S-VIDEO ⑤ COMPOSITE

Best picture quality is displayed in the following order.

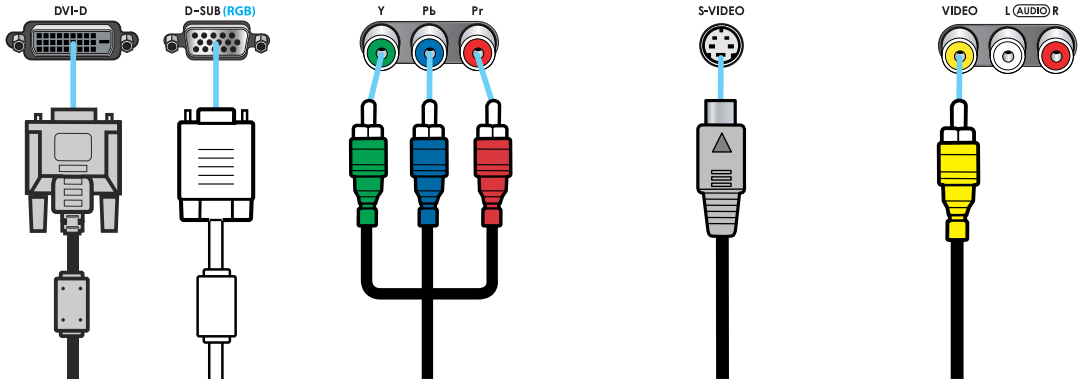

DVI-D, D-Sub > COMPONENT > S-VIDEO > COMPOSITE

The superior picture quality starts from the far left side.

TIP

- When connecting an external device, ensure to read the connecting device's manual. The location or the number of the terminals on the external device may be different depending on its model.
- Connect a DVI connection to the output of DVD, cable receiver or satellite receiver. Connecting a DVI connection to a PC may result in a message, "Unknown Signal".
- Do not power on until all necessary connections are made. If power is given before connections completed, this may damage the product.
- Make sure to match the cable in color with the terminal.
- Make sure to check the type of terminals to be connected.

How to Connect a VCR/Cable Receiver

Connection Method

1 Connect the Video cable or S-Video cable between Video/S-Video output terminal of VCR or Cable receiver and Video/S-Video input terminal of TV. (Connect the jacks to terminals in the same color.)

2 Connect the Audio cable (Left: white, Right: red) between Audio output terminal of VCR or cable receiver and Audio input terminal of TV. (Connect the jacks to terminals in the same color.)

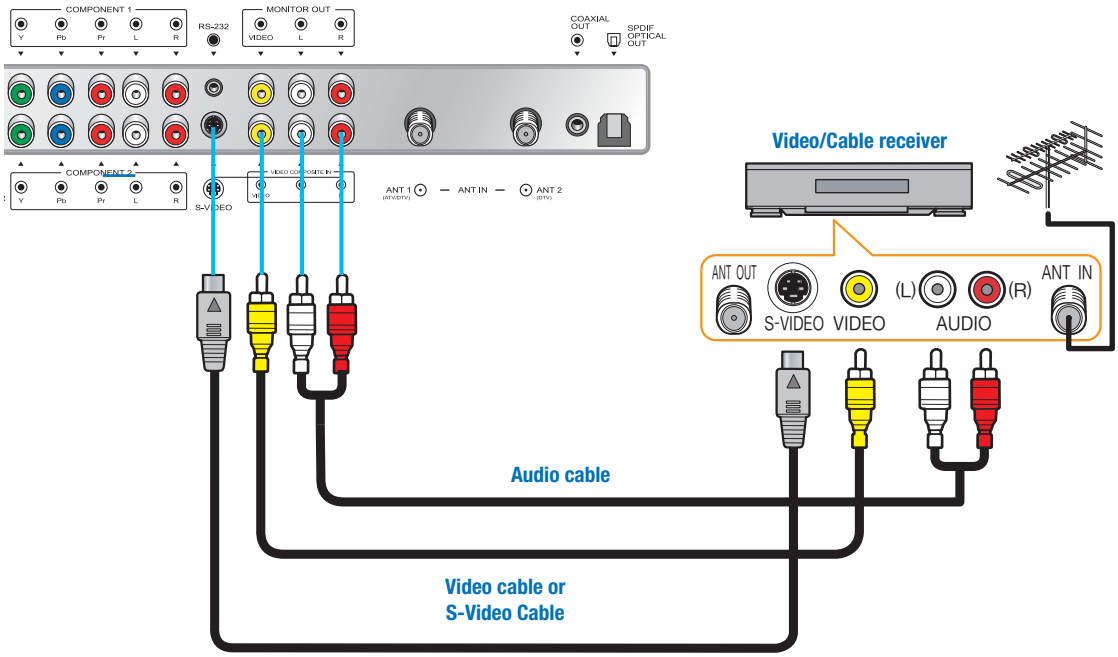

How to Watch

1 Turn on TV to press SOURCE on remote control.

2 Press to move to Video or S-Video and press to select.

For more information, read the user's guide of VCR or cable receiver.

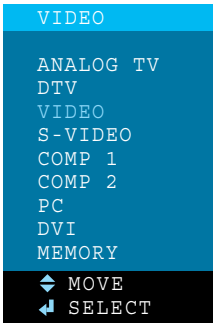

TIP To enjoy better picture quality, use the S-Video cable rather than the composite cable.

How to Connect a DTV Receiver or DVD Player

Connection Method

1 Connect the Video cable (Y, Pb, Pr) between output terminals (Y, Pb, Pr) of DTV receiver or DVD player and the input terminals (Y, Pb, Pr) of DTV/DVD (480i/480p/720p/1080i) on the rear of TV.
(Connect the jacks to terminal in the same color.)

2 Connect the Audio cable between Audio output terminal of DTV receiver or DVD player and Audio input terminal for DTV/DVD Audio on the rear of TV. (Connect the jacks to terminals in the same color.)

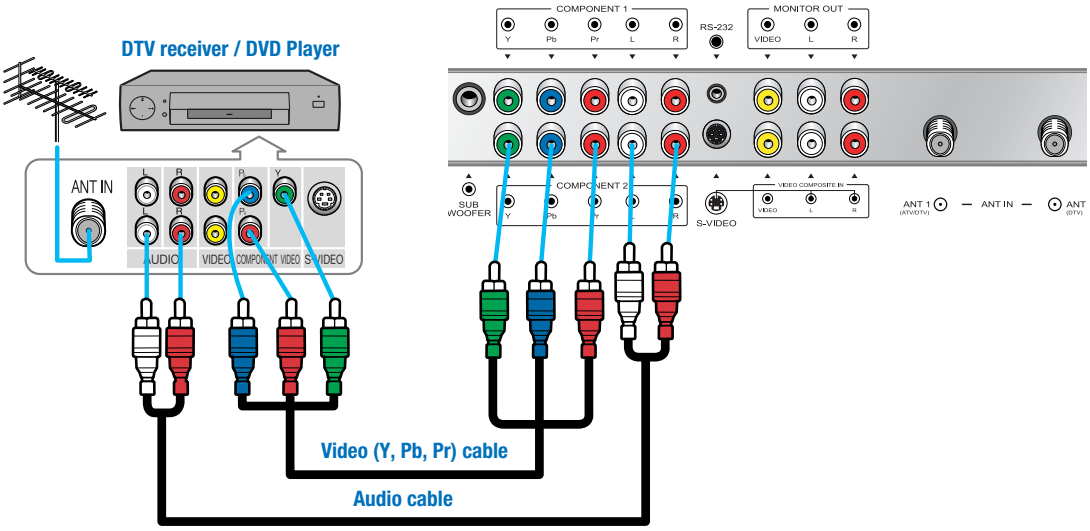

How to Watch

1 Turn on TV and press SOURCE on remote control.

2 Press to move Component 1 or Component 2 and press to select.

For more information, read the user's guide of DTV receiver or DVD player.

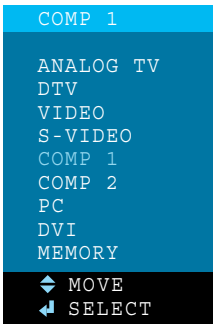

TIP

- Output terminal mark (Y, Pb, and Pr) of DVD player may be indicated as Y, B-Y, R-Y/Y-Cb-Cr /Y-Pb-Pr according to the type of DVD player models.
- If your DVD player or Set Top Box supports DVI/D-SUB, see Connecting to a PC (page 27) for connection. You can enjoy more clear picture quality.

How to Connect a Camcorder/Game Player

Connection Method

1 Connect the Video/S-Video cable between Video/S-Video output terminal of Camcorder/Game player and Video/S-Video input terminal of TV. (Connect cables and terminal in the same colors.)

2 Connect the Audio cable (Left-white, Right-red) between Audio output terminal of Camcorder/Game player and Audio input terminal of TV. (Connect the jacks to terminals in the same color.)

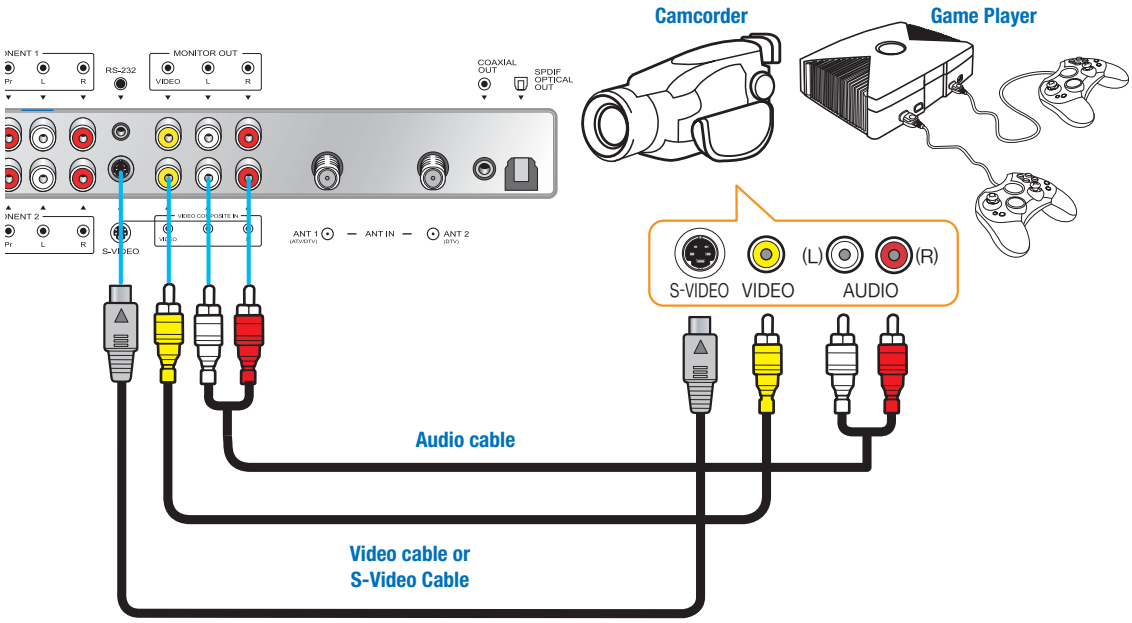

How to Watch

1 Turn on TV and press SOURCE on remote control.

2 Press to move Video or S-Video and press to select.

For more information, read the user's guide of Game player or Camcorder.

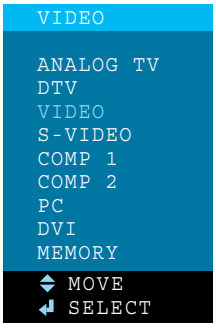

How to Connect to a PC

Connection Method

1 Connect the PC signal cable (15-pin D-sub) between the output terminal of PC and the D-sub input terminal of TV.

2 Connect the Audio cable between Audio output terminal of PC and Audio input terminal for PC on the rear of TV. (Connect the iacks to terminals in the same color.)

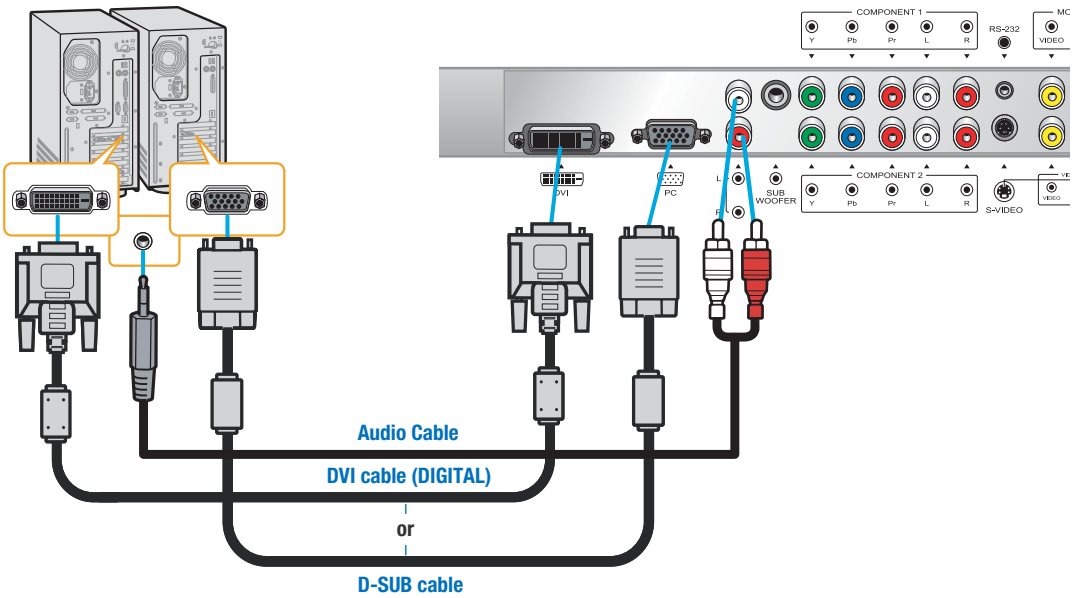

When Using as a PC Monitor

1 Turn on TV and press SOURCE on remote control.

2 Press ◄ ► ▲ ▼ to move to PC or DVI and then press ↵ to select.

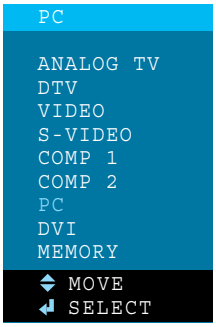

TIP

- If you use the DVI connection, you can enjoy better picture quality.
- This product supports Plug-and-Play function.
- We recommend the above method if the DVD player or set top box supports DTV signal with DVI/D-sub (15 pin) cable for the better picture quality.
- If you input an unsupported resolution in PC or DVI mode, the screen won't be displayed properly.

Resolutions Supported in PC

Resolution	Horizontal frequency	Vertical frequency
640 x 350	31.47	70.09
	37.86	85.08
640 x 480	31.47	59.94
	37.86	72.80
	37.50	75.00
	43.27	85.01
720 x 400	31.47	70.08
800 x 600	37.88	60.32
	48.08	72.18
	46.88	75.00
	53.67	85.06
832 x 624	49.72	74.55
1024 x 768	48.36	60.00
	60.02	75.03
	68.68	85.00

How to Connect an External Visual Device

You can connect your TV to other visual device to watch two TV programs at the same time.

Connection Method

1. Connect the Composite Video cable between Video input terminals of an external device and the Video output terminals for Video on the rear of TV.
(Connect the jacks to terminals in the same color.)

2. Connect the Audio cable between Audio input terminal (Left-white, Right-red) of an external device and Audio output terminal for Video on the rear of TV. (Connect the jacks and terminals in the same color.)

3. For more information, read the user's guide of an external device.

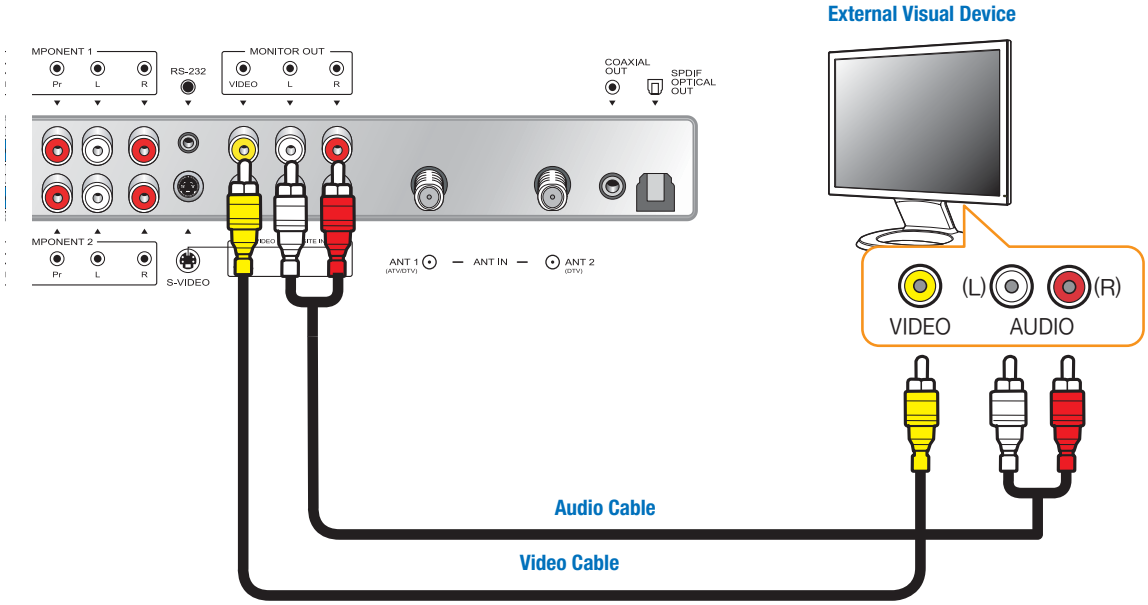

TIP Video and Audio outputs are available only when watching an Analog TV, Digital TV or VCR. This is not supported in the Input Mode of Component, DVI/D-SUB or S-Video.

How to Use Digital Sound

Connection Method

1 Connect the coaxial cable or optical cable to the digital audio output terminal for coaxial cable or SPDIF optical digital audio output terminal on the rear of TV.

2 Deselect Speaker Output from the Sound Menu and select Digital Sound Output. (See page 46~47)

3 For more information, read the user's guide of the external sound device.

⚠ Do not look into directly the beam with the optical port. Doing so may damage your eyesight.

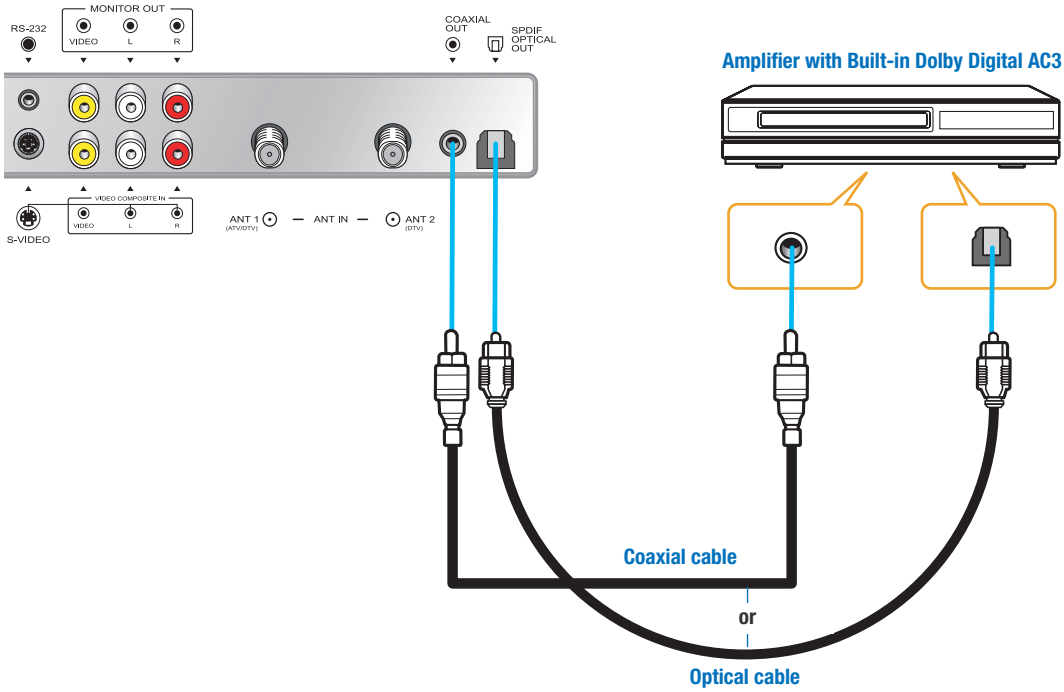

TIP Digital Audio Output is available when watching a digital TV program.

How to Select the Picture Mode

Users can automatically adjust the picture mode according to the input mode.

MENU

Press Menu button.
Menu items appear on the screen.

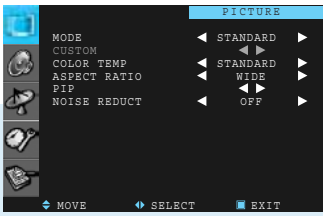

1

Press ↵ button to select

"MODE" is selected.

2

Whenever you press Left or Right button, the mode changes in following order.
Standard Dynamic Movie Mild
Custom 1 Custom 2

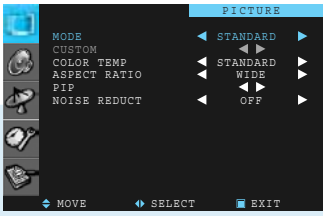

EXIT

Press MENU button after the setting is done, and Menu goes to the previous menu.
If the EXIT button is pressed, the menu disappears.

STANDARD : Most video contents are appropriate to this mode.

SPORT : Clear display

MOVIE : When watching a movie

MILD : Soft display.

CUSTOM : When the user wants to directly set the values See the next page

How to Directly Select Picture Mode : PICTURE Press MODE. button.

- When the input mode is Analog TV, Digital TV, Video, S-Video, Component 1 & 2, users can select Standard Dynamic Movie Mild Custom 1/2 .
- When the input mode is PC, DVI, users can select Standard Low (Character Mode) High (Movie) Custom 1/2 .
- When the input mode is Memory, users can select Standard Dynamic Movie Mild.

TIP

- The adjustment menu may be different depending on the input mode.
- The adjustment of Contrast, Brightness, Sharpness, Color and Tint is allowed only in the Custom mode.

How to Set the Desired Picture

Users can manually adjust their desired picture.

MENU

Press Menu button.
Menu items appear on the screen.

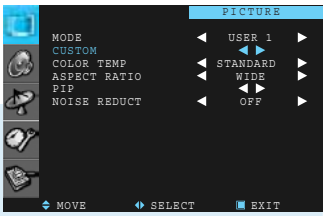

1

Press ↵ button to select .

Press Left or Right button to choose "Custom 1/2".

2

Press Left and Right buttons to move to "Custom".

3

Press button to select "Custom".
Picture Adjust menu items appear.

4

Press Up and Down buttons to move.
Press Left and Right buttons to adjust.

EXIT

Press MENU button after the setting is done, and Menu goes to the previous menu.
If the EXIT button is pressed, the menu disappears.

CONTRAST : Adjust the brightness and darkness of object and background.

BRIGHTNESS : Adjust the brightness of the entire picture.

SHARPNESS : Adjust clarity of outline of objects.

COLOR : Adjust colors into deeper or lighter colors.

TINT : Adjust colors naturally.

TIP

SHARPNESS, COLOR, TINT are not applied to PC and DVI modes.

How to Adjust the Color Temperature of the Screen

Users can manually adjust their desired color temperature.

MENU

Press Menu button.
Menu items appear on the screen.

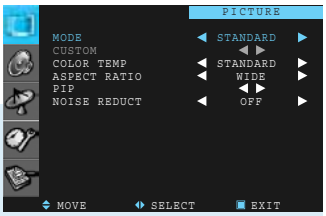

1

Press ↵ button to select .

2

Press Up and Down buttons to move to "COLOR TEMP".

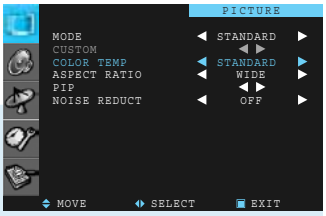

3

Whenever you press Left or Right button,
the mode changes in following order.
⇨Standard ⇨Warm 1 ⇨Warm 2 ⇨Cool 1 ⇨Cool 2

EXIT

Press MENU button after the setting is done, and Menu goes to the previous menu.
If the EXIT button is pressed, the menu disappears

STANDARD : General color of the picture
COOL 1, 2 : Cool color in the background with a bluish tint
WARM 1, 2 : Warm color in the background with a reddish tint

How to Select the Aspect Ratio

Users can manually adjust the size of the screen.

MENU

Press Menu button.
Menu items appear on the screen.

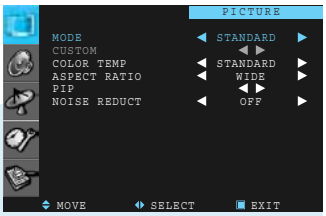

1

Press ↵ button to select **.**

2

Press Up and Down buttons to move to "ASPECT RATIO".

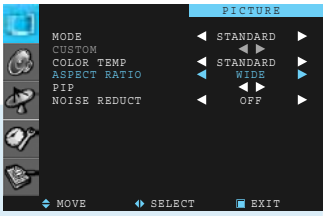

3

Whenever you press Left or Right button,
the mode changes in following order.
⇨Wide ⇨General ⇨Panorama ⇨Zoom 1 ⇨Zoom 2 ⇨

EXIT

Press MENU button after the setting is done, and Menu goes to the previous menu.
If the EXIT button is pressed, the menu disappears.

ASPECT

How to Directly Select the Screen Size : Press button.

The current screen size is displayed on the OSD menu.
If you press the ASPECT button repeatedly, the screen size changes in following order

- Under Digital TV input : Users can select ⇨Wide ⇨Normal ⇨Zoom 1 ⇨Zoom 2 ⇨Auto.
- Under PC inputs : Users can select ⇨Wide ⇨Normal.
- Under DVI inputs : Users can select ⇨Wide ⇨Normal ⇨Zoom 1 ⇨Zoom 2.
- Under other inputs : Users can select ⇨Wide ⇨Normal ⇨Panorama ⇨Zoom 1 ⇨Zoom 2.

AUTO (This is applied in digital broadcasting input mode only.)

The screen size automaticaly changes according to a signal source received (General broadcast ⟶4:3, Wide broadcast ⟶16:9)

WIDE

General broadcast picture is adjusted to 16:9.

Normal

4:3 general picture size

Panorama

Picture size for panorama video

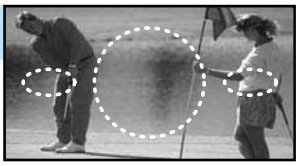

ZOOM 1

Picture enlarged to 16:9 format, letter box format.

ZOOM 2

Zoom in 16:9 in vertical direction

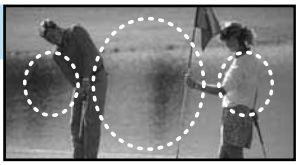

How to Watch the PIP

This function allows you to watch the PIP or TWIN mode.

MENU

Press Menu button.
Menu items appear on the screen.

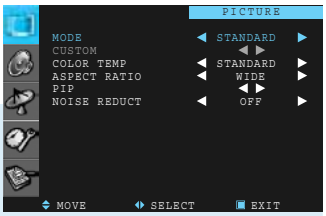

1 **Press ↵ button to select .**

2 **Press Up and Down buttons to move to PIP.**

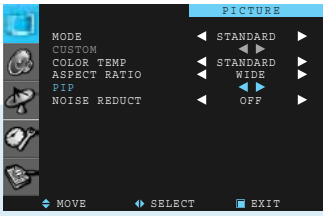

3 **Press Left and Right buttons to select PIP.**
The PIP Menu appears.

4 Whenever you press Left or Right button,
the mode changes in following order.
PIP 1 PIP 2 PIP 3
TWIN 1 TWIN 2 OFF

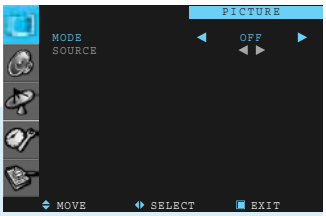

After setting Mode, go to STEP 5 if you need to set the SOURCE for Sub-picture.

<PIP 1>

<PIP 2>

<PIP 3>

<TWIN 1 >

<TWIN 2 >

Continued on the next page

How to Set the INPUT for the Sub-Picture

This function is available only in the PIP mode.

5 Press Up and Down buttons to move to "SOURCE".

6 Press ↵ Left and Right buttons to select "SOURCE".
The list of sub-picture sources appears.

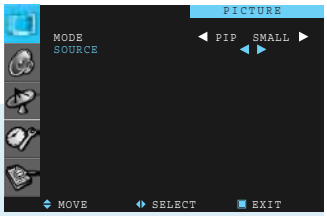

7 Press Up and Down buttons to move to the sub-picture source you want.

8 Press ↵ Press button to select source.

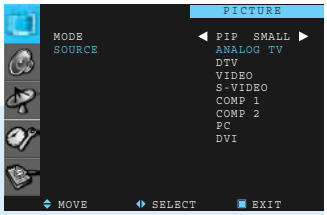

EXIT

Press MENU button after the setting is done, and Menu goes to the previous menu.
If the EXIT button is pressed, the menu disappears.

You can set the PIP mode quickly using the remote control.

How to Select the PIP : Press the button.
PIP

Whenever you press this button, the PIP mode is selected or deselected.

How to Select the Size of Sub-picture : Press the button.
SIZE

Whenever you press this button, the size of the Sub-picture changes.

How to Select the INPUT : Press the button.
SOURCE

Press the ▲▼ buttons to select the INPUT and then select ↵.

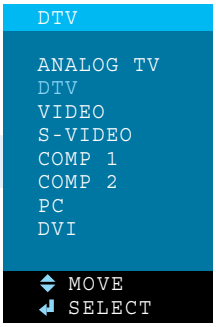

How to Switch the PIP to Sub-picture : Press the button.
SWAP

Whenever you press this button, the Main picture and Sub-picture are switched each other.

How to Set the channel of the Sub-picture Channel : Press the SUB-CH − + **button.**

This is applied only when the sub-picture is displayed.

How to Change the Position of the Sub-picture : Press the POSITION **button.**

Bottom Right Corner → Bottom Left Corner → Left Top Corner → Right Top Corner →

TIP The same input mode cannot be selected for the main picture and sub-picture.

Supported PIP Table

PIP : O → Supported, X → Not Supported

Main \ Sub	PC	DVI	DTV	Component 1	Component 2	Analog TV	Video	S-Video
PC	X	X	X	X	X	0	0	0
DVI	X	X	X	X	X	0	0	0
DTV	X	X	X	X	X	0	0	0
Component 1	X	X	X	X	X	0	0	0
Component 2	X	X	X	X	X	0	0	0
Analog TV	0	0	0	0	0	X	0	0
Video	0	0	0	0	0	0	X	0
S-Video	0	0	0	0	0	0	0	X
Memory	X	X	X	X	X	X	X	X

How to Reduce Noise

MENU

Press Menu button.
Menu items appear on the screen.

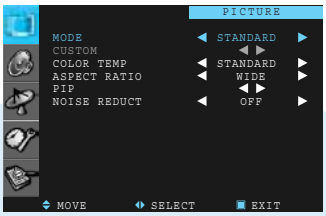

1

Press ↵ button to select .

2

Press Up and Down buttons to move to "NOISE REDUCT".

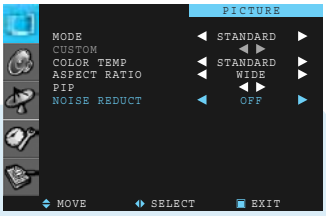

3

Whenever you press Left or Right button,
the mode changes in following order.
⇨ Weak ⇨ Strong ⇨ Off ⇨

EXIT

Press MENU button after the setting is done, and Menu goes to the previous menu.
If the EXIT button is pressed, the menu disappears.

TIP In the Noise Reduction, the more you reduce the screen noise, the more the sharpness level of the pictures may become degraded.