Straubing, 13 June 2002

T E S T - R E P O R T

No. 50602-20327

for

ID CPR.02

Inductive Tag Reader

Applicant:	FEIG ELECTRONIC GmbH
Purpose of testing:	To show compliance with FCC Code of Federal Regulations, CFR 47, Part 15, Subpart C, Section 15.225

Note:
The test data of this report relate only to the individual item which has been tested. This report shall not be reproduced except in full extent without the written approval of the testing laboratory.

Table of Contents

1. Administrative Data 3

2. Identification of Test Laboratory 4

3. Summary of Test Results 5

4. Operation Mode of EUT 6

5. Configuration of EUT and Peripheral Devices 7

6. Measuring Methods 8

6.1. Field strength of in-band emissions (§15.225 (a)) and unwanted emissions < 30 MHz (§15.225 (b)) 8

6.2. Frequency tolerance (§15.225 (c)) 9

6.3. Unwanted Emission 30 MHz - 1 GHz (§15.225 (b)) 11

7. Photographs of Test Setups 13

7.1. Radiated Emissions 9 kHz – 30 MHz 13

7.2. Radiated Emissions 30 – 1000 MHz (anechoic chamber) 14

7.3. Radiated Emissions 30 – 1000 MHz (open area test site) 16

8. Equipment List 18

9. Referenced Regulations 20

10. List of Measurements 21

11. Test Results 22

12. Charts taken during testing 27

1. Administrative Data

Equipment Under Test (EUT):	**ID CPR.02**
Serial number(s):	**0001**
Type of equipment:	**Inductive Tag Reader**
Type of emission:	**10K0A1D**
Parts/accessories:	**---**
FCC-ID:	

Applicant:	**FEIG ELECTRONIC GmbH**
(full address)	**Lange Strasse 4** **D-35781 Weilburg-Waldhausen**
Contract identification:	**Order no. EB201718 / 16483**
Contact person:	**Mr. Bernhard Schüßler**
Manufacturer:	**FEIG ELECTRONIC GmbH**

Receipt of EUT:	**May, 2002**
Dates of test:	**June, 2002**
Note:	**---**

Responsible for testing:	**Thomas Eberl**
Responsible for test report:	**Thomas Eberl**

2. Identification of Test Laboratory

Test Laboratory: (full address):	**Senton GmbH EMI/EMC Test Center** **Aeussere Fruehlingstrasse 45** **D-94315 Straubing** **Germany**	
Contact person:	**Mr. Johann Roidt**	
Communication:	**Telephone** **Fax** **eMail:**	**(+49) 0 94 21 / 55 22-0** **(+49) 0 94 21 / 55 22-99** **Office@senton.de**
FCC registration number:	**90926**	
Industry Canada file number:	**IC 3050**	

3. Summary of Test Results

The tested sample complies with the requirements for set forth in the

The Code of Federal Regulations 47, Part 15, Subpart C, Section 15.225

of the Federal Communication Commission (FCC).

Johann Roidt
Technical Manager

Thomas Eberl
Test Engineer

4. Operation Mode of EUT

Continuously reading a TAG

Reading distance : 50 mm

5. Configuration of EUT and Peripheral Devices

Configuration of cables of EUT

Not applicable

Configuration of peripheral devices connected to EUT

All tests were performed with the EUT connected to a Fujitsu LiteLine Model 5033 Notebook computer via RS 232 interface. The EUT was powered by an external DC power supply.

6. Measuring Methods

6.1. Field strength of in-band emissions (§15.225 (a)) and unwanted emissions < 30 MHz (§15.225 (b))

Radiated emissions in the frequency range 9 kHz – 30 MHz will be measured initially at a distance of 3 meters. A prescan at 3 meter distance will be performed in a shielded room with the detector of the spectrum analyzer or EMI Receiver set to peak. Final measurement is then performed at 30 meter distance. In case the regulation requires testing at other distances, the result will be extrapolated. The extrapolation factor will be determined by making a second measurement at 10 meter distance. The provisions of 15.31 (d) apply.
According to section 15.209 (d) final measurementis performed with the detector set to Quasi Peak except for the frequency bands 9 – 90 kHz and 110 – 490 kHz where average detector is employed.

6.2. Frequency tolerance (§15.225 (c))

6.2.1. Frequency stability vs. temperature

The frequency stability vs. temperature was measured with a spectrum analyzer connected to the output of the transmitter power amplifier via probe antenna while EUT was operating in transmit mode using the assigned frequency.

The trace mode of the spectrum analyzer was set to write with frequency count mode activated:
RBW = 100 Hz, VBW = 100 Hz, span = 20 kHz, sweep = 1.5 s (auto mode)

See figure 1 for the measurement setup.

Test equipment used (see equipment list for details):
02, 18, 51, 54, 69, 70, 71

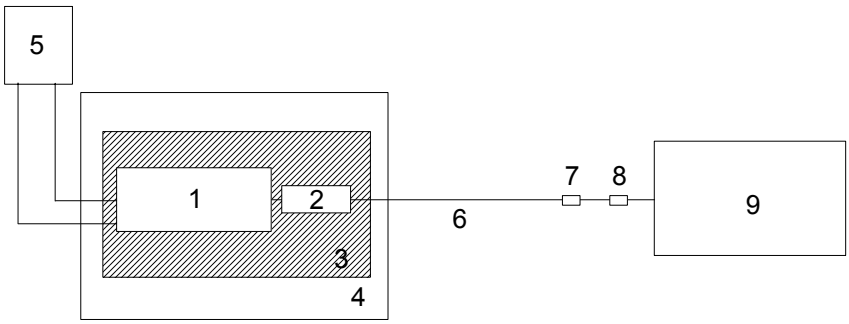

Figure 1: Measurement setup for testing within temperature test chamber

1 Transmitter (EUT)
2 Probe antenna
3 Wooden support
4 Temperature test chamber
5 DC power supply
6 Test cable
7 DC-block
8 Attenuator
9 Spectrum analyzer

6.2.2. Frequency stability vs. supply voltage

The frequency stability vs. supply voltage was measured with a spectrum analyzer connected to the output of the transmitter power amplifier via probe antenna while EUT was operating in transmit mode using the assigned frequency.

The trace mode of the spectrum analyzer was set to write with frequency count mode activated:
RBW = 100 Hz, VBW = 100 Hz, span = 20 kHz, sweep = 1.5 s (auto mode)

See figure 1for the measurement setup.

Test equipment used (see equipment list for details):
02, 18, 51, 69, 70, 71

6.3. Unwanted Emission 30 MHz - 1 GHz (§15.225 (b))

Radiated emissions were measured over the frequency range from 30 MHz to 1 GHz. For final testing the detector-function of the spectrum analyzer was set to quasi peak

Measurements were made in both the horizontal and vertical planes of polarization. Preliminary scans were taken in a semi-anechoic room using a spectrum analyzer with the detector function set to peak and resolution bandwidth set to 100 kHz. All tests were performed at a test-distance of 3 meters. Hand-held or body-worn devices are rotated through three orthogonal axes to determine which attitude and configuration produces the highest emission relative to the limit and therefore shall be used for final testing.
For final testing an open-area test-site was used. During the tests the EUT was rotated all around and the receiving-antenna was raised and lowered from 1 meter to 4 meters to find the maximum levels of emissions. The cables and equipment were placed and moved within the range of position likely to find their maximum emissions.

See figure 2 for the measurement setup.

Test equipment used (see equipment list for details):
01, 06, 12, 15, 38, 39, 40, 41, 55, 58, 61, 64, 66

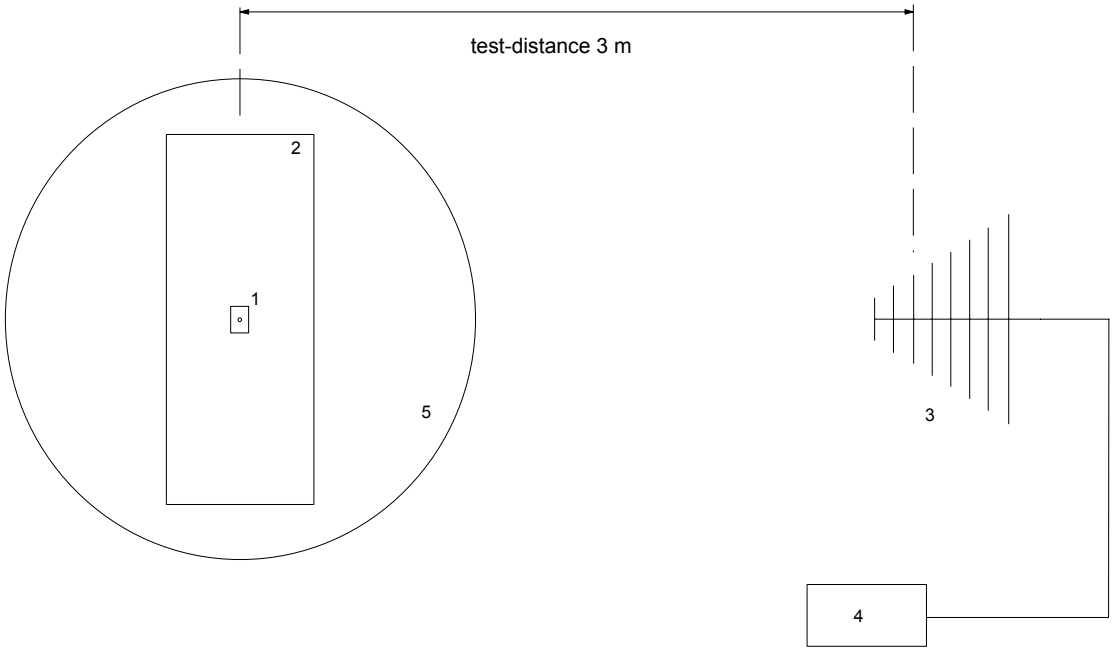

Figure 2: Measurement setup for radiated emission test

1 Transmitter (EUT)
2 Wooden table
3 Measurement antenna
4 Test receiver
5 Turn table

7. Photographs of Test Setups

7.1. Radiated Emissions 9 kHz – 30 MHz

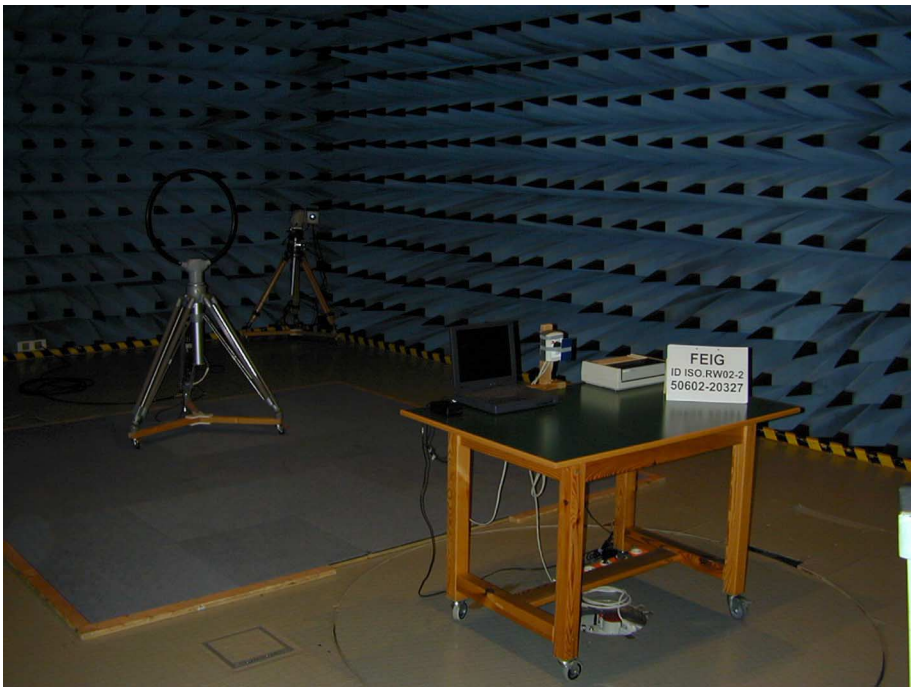

7.2. Radiated Emissions 30 – 1000 MHz (anechoic chamber)

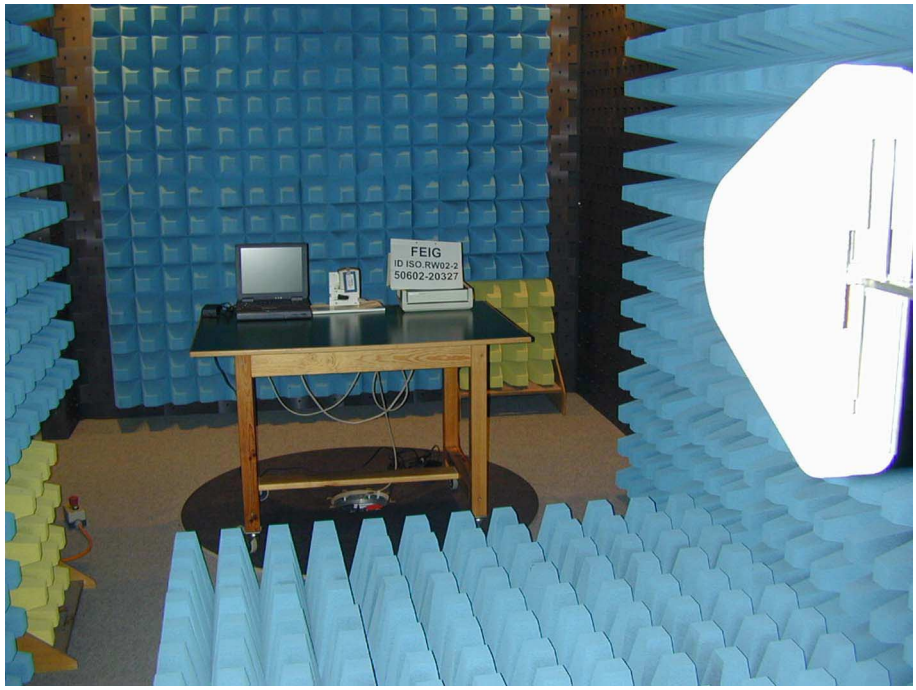

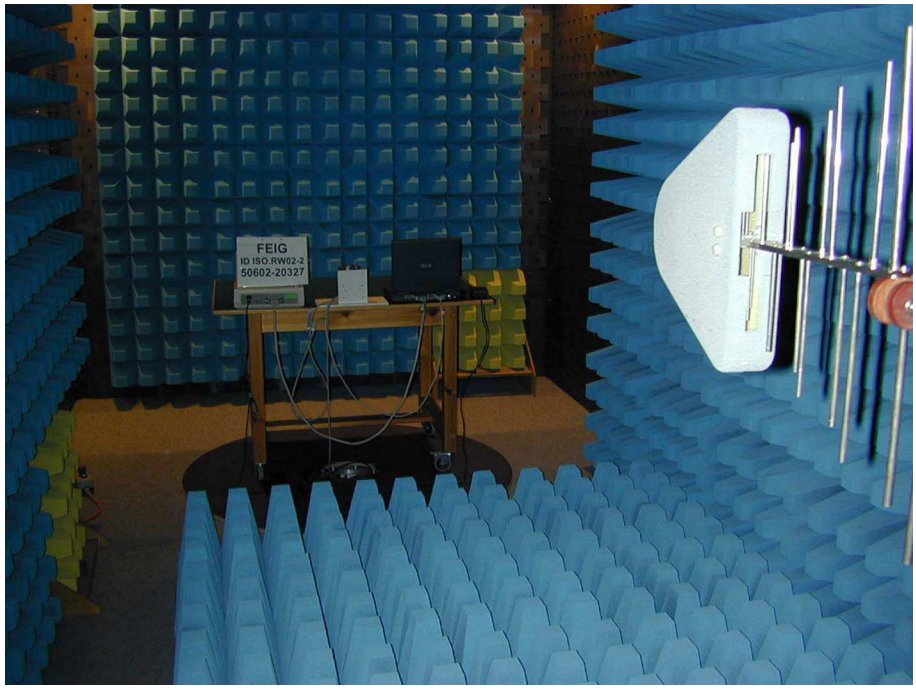

Radiated Emissions 30 – 1000 MHz (anechoic chamber) continued

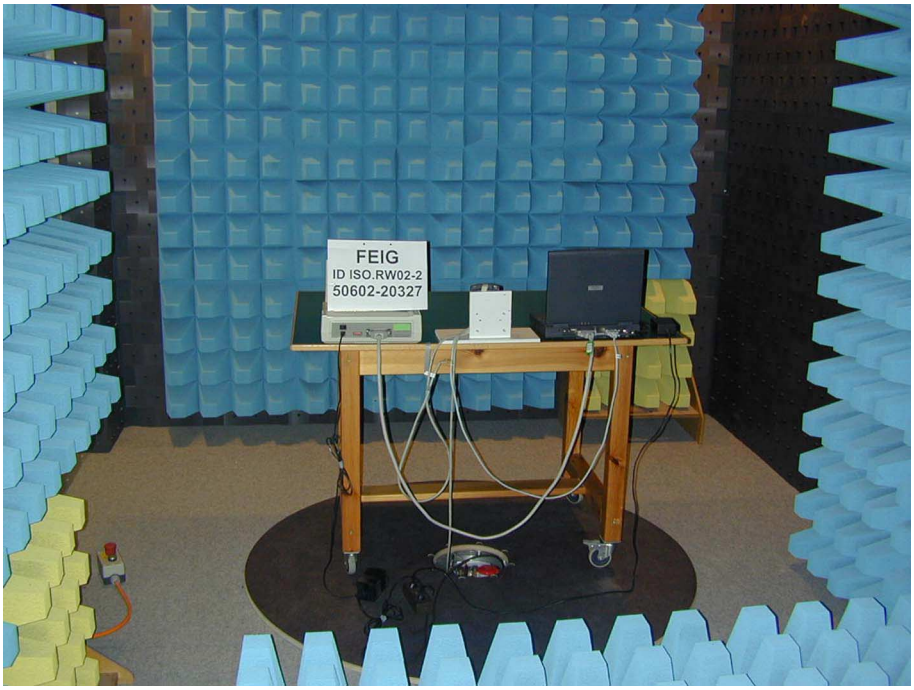

7.3. Radiated Emissions 30 – 1000 MHz (open area test site)

Radiated Emissions 30 – 1000 MHz (open area test site) continued

8. Equipment List

To facilitate reference to test equipment used for related tests, each item of test equipment and ancillaries such as cables are identified (numbered) by the Test Laboratory.

No.	Type	Model	Serial Number	Manufacturer
01	Spectrum Analyzer	R 3271	05050023	Advantest
02	EMI Test Receiver	ESMI	839379/013 839587/006	Rohde & Schwarz
03	Test Receiver	ESH 3	880112/032	Rohde & Schwarz
04	Test Receiver	ESHS 10	860043/016	Rohde & Schwarz
05	Test Receiver	ESV	881414/009	Rohde & Schwarz
06	Test Receiver	ESVP	881120/024	Rohde & Schwarz
07	Audio Analyzer	UPA	862954	Rohde & Schwarz
08	Power Meter	NRVS	836856/015	Rohde & Schwarz
09	Power Sensor	NRV-Z52	837901/030	Rohde & Schwarz
10	Power Sensor	NRV-Z4	863828/015	Rohde & Schwarz
11	Preamplifier	ESV-Z3	860907/004	Rohde & Schwarz
12	Preamplifier	R14601		Advantest
13	Preamplifier	ACX/080-3030	32640	CTT
14	Preamplifier	ACO/180-3530	32641	CTT
15	Signal generator	SMY 01	830694/001	Rohde & Schwarz
16	Signal Generator	HP 8673 D	2930A00966	Hewlett Packard
17	Waveform Generator	HP 33120 A	US34005375	Hewlett Packard
18	Attenuator 20 dB	4776-20	9503	Narda
19	Attenuator 10 dB	4776-10	9412	Narda
20	Pulse Limiter	ESH 3-Z2	1144	Rohde & Schwarz
21	Pulse Limiter	11947 A	3107A00566	Hewlett Packard
22	V-Network	ESH 3-Z5	862770/018	Rohde & Schwarz
23	V-Network	ESH 3-Z5	894785/005	Rohde & Schwarz
24	V-Network	ESH 3-Z5	830952/025	Rohde & Schwarz
25	V-Network	ESH 3-Z6	830722/010	Rohde & Schwarz
26	V-Network	NSLK 8127	8127152	Schwarzbeck
27	V-Network	NNLA 8119	8119148	Schwarzbeck
28	V-Network	SE 01	01	Senton
29	T-Network	ESH 3-Z4	890602/011	Rohde & Schwarz
30	T-Network	ESH 3-Z4	890602/012	Rohde & Schwarz
31	High Impedance Probe	TK 9416	01	Schwarzbeck
32	High Impedance Probe	TK 9416	02	Schwarzbeck
33	Current Probe	ESH 2-Z1	863366/18	Rohde & Schwarz
34	Current Probe	ESV-Z1	862553/3	Rohde & Schwarz

No.	Type	Model	Serial Number	Manufacturer
35	Absorbing Clamp	MDS 21	80911	Lüthi
36	Absorbing Clamp	MDS 21	79690	Lüthi
37	Loop Antenna	HFH2-Z2	882964/1	Rohde & Schwarz
38	Biconical Antenna	HK 116	842204/001	Rohde & Schwarz
39	Biconical Antenna	HK 116	836239/02	Rohde & Schwarz
40	Log. Periodic Antenna	HL 223	841516/023	Rohde & Schwarz
41	Log. Periodic Antenna	HL 223	834408/12	Rohde & Schwarz
42	Horn Antenna	3115	9508-4553	Emco
43	Horn Antenna	3160-03	9112-1003	Emco
44	Horn Antenna	3160-04	9112-1001	Emco
45	Horn Antenna	3160-05	9112-1001	Emco
46	Horn Antenna	3160-06	9112-1001	Emco
47	Horn Antenna	3160-07	9112-1008	Emco
48	Horn Antenna	3160-08	9112-1002	Emco
49	Horn Antenna	3160-09	9403-1025	Emco
50	Digital multimeter	199	463386	Keithley
51	DC Power Supply	NGSM 32/10	203	Rohde & Schwarz
52	DC Power Supply	NGB	2455	Rohde & Schwarz
53	DC Power Supply	NGA	386	Rohde & Schwarz
54	Temperature Test Chamber	HT4010	07065550	Heraeus
55	Cable	RG214	1309	Senton
56	Cable	200CM_001	1357	Rosenberger
57	Cable	150CM_001	1479	Rosenberger
58	Cable Set EG1	RG214	1189 - 1191	Senton
59	Cable Set Cabine 1	RG214		Senton
60	Cable Set Cabine 2	RG214		Senton
61	Cable Set Cabine 3	RG214		Senton
62	Shielded Room	No. 1	1451	Senton
63	Shielded Room	No. 2	1452	Senton
64	Semi-anechoic Chamber	No. 3	1453	Siemens
65	Shielded Room	No. 4	1454	Euroshield
66	Open Area Test Site	EG 1		Senton
67	Cable for Antenna Connector			Lucent Technologies
68	DC Block 0.01-18GHz		8037	Inmet Corp.
69	High pass filter			Lucent Technologies
69	DC Block	7006	A2798	Weinschel Corp.
70	Cable for Antenna Connector			Senton
71	Dummy load			Futaba Corporation

9. Referenced Regulations

All tests were performed with reference to the following regulations and standards:

☒	CFR 47 Part 2	Code of Federal Regulations Part 2 (Frequency Allocations And Radio Treaty Matters, General Rules And Regulations) of the Federal Communication Commission (FCC)	October 1, 1999
☐	CFR 47 Part 15 Subpart A	Code of Federal Regulations Part 15 (Radio Frequency Devices), Subpart A (General) of the Federal Communication Commission (FCC)	May 30, 2002
☐	CFR 47 Part 15 Subpart B	Code of Federal Regulations Part 15 (Radio Frequency Devices), Subpart B (Unintentional Radiators) of the Federal Communication Commission (FCC)	May 30, 2002
☒	CFR 47 Part 15 Subpart C	Code of Federal Regulations Part 15 (Radio Frequency Devices), Subpart C (Intentional Radiators) of the Federal Communication Commission (FCC)	May 30, 2002
☐	CFR 47 Part 95 Subpart C/E	Code of Federal Regulations Part 95 (Personal Radio Services), Subpart C/E (Radio Control(R/C) Radio Service) of the Federal Communication Commission (FCC)	October 1, 1998
☒	ANSI C63.4	American National Standard for Methods of Measurement of Radio-Noise Emissions from Low-Voltage Electrical and Electronic Equipment in the Range of 9 kHz - 40 GHz	October, 1992
☐	RSS-210	Radio Standards Specification RSS-210 Issue 2 for Low Power Licence-Exempt Radiocommuniction Devices of Industry Canada	February 24, 1996
☐	TIA/EIA-603	Land Mobile FM or PM Communications Equipment Measurement and Performance Standards	February, 1993
☐	TIA/EIA-603-1	Addendum to TIA/EIA-603	March 4, 1998

10. List of Measurements

CFR 47 Part 15 Subpart C			
Section(s):	**Test**	**Page**	**Result**
§15.225 (a)	Maximum in-band field strength		Passed
§15.225 (b)	Out-of-band emissions		Passed
§15.225 (c)	Frequency tolerance of carrier signal		Passed

11. Test Results

Field Strength of Emissions according to FCC Rules, Part 15, Subpart C, Section 15.225 (a), (b) Frequency Band < 30 MHz

Model:	**ID CPR.02**
Type:	**Inductive Reader**
Serial No.	**0001**
Applicant:	**Feig Electronic GmbH**
Test Site:	**Open Field Test Site (without Ground Plane)**
Distance:	**10 Meter**
Date of Test:	**June 2002**

Frequency (MHz)	Detector	Antenna Polarization	Analyzer Reading (dBµV)	Correction Factor (dB)	Field Strength (dBµV/m)	Limit(**) 10m dBµV/m	Margin dB
13.553	Q.P.	N/A	1.1	20	21.2	49.5	**28.3**
13.560	Q.P.	N/A	43.5	20	63.5	100	**36.5**
13.567	Q.P.	N/A	1.2	20	21.2	49.5	**28.3**
27.125	Q.P.	N/A	1.3	20	21.3	49.5	**28.2**

**** = Limit were calculated from 30m to 10m (40 dB/decade)**

Sample calculation of field strength values:

Field Strength (dBµV/m) = Analyzer Reading (dBµV) + Correction Factor (dB)

Test equipment used (see equipment list for details):
02, 13, 14, 16, 38, 40 ,42, 57, 64, 67

Field Strength of Emissions according to FCC Rules, Part 15, Subpart C, Section 15.225 (b) Frequency Band > 30 MHz

Model:	**ID CPR.02**
Type:	**Inductive Reader**
Serial No.	**0001**
Applicant:	**Feig Electronic GmbH**
Test Site:	**Open Field Test Site**
Distance:	**3 Meter**
Date of Test:	**June 2002**

Frequency (MHz)	Detector	Antenna Polarization	Analyzer Reading (dBµV)	Correction Factor (dB)	Field Strength (dBµV/m)	Limit dBµV/m	Margin dB
40.675	Q.P.	Ver	18.5	12.8	31.3	40.0	**8.7**
88.100	Q.P.	Ver	20.0	11.3	31.3	43.5	**12.2**
189.800	Q.P.	Ver	19.4	18.5	37.9	43.5	**5.6**
203.400	Q.P.	Ver	11.5	19.1	30.6	43.5	**12.9**
393.220	Q.P	Hor	8.2	22.2	30.4	46.0	**15.6**
406.799	Q.P.	Hor	14.0	22.6	36.6	46.0	**9.4**
420.359	Q.P.	Hor	5.4	23.0	28.4	46.0	**17.6**
433.919	Q.P.	Hor	5.3	23.3	28.6	46.0	**17.4**

***** = No emissions above noise floor detected**

Sample calculation of field strength values:

Field Strength (dBµV/m) = Analyzer Reading (dBµV) + Correction Factor (dB)

Test equipment used (see equipment list for details):
02, 13, 14, 16, 38, 40 ,42, 57, 64, 67

FREQUENCY STABILITY VS. TEMPERATURE — Section 15.225 (c)

EUT: ID CPR.02
Serial number: 0001

Applicant: FEIG ELECTRONIC GmbH

Mode: Reading transponder

Date of test: June, 2002
Operator: Thomas Eberl

Test conditions:

Temperature: see table below
Supply voltage: 24.0 V DC

Specifications:

Frequency tolerance: ±0.01 % of nominal carrier frequency
Temperature range: -20 to +50°C

Temperature (°C)	Nominal carrier frequency (MHz)	Frequency measured (MHz)	Frequency deviation (Hz)	Frequency deviation (%)	Limit (%)
-20	13,560000	13,560077	77	0,00057	0,01
-10	13,560000	13,560063	63	0,00046	0,01
±0	13,560000	13,560055	55	0,00041	0,01
+10	13,560000	13,560035	35	0,00026	0,01
+20	13,560000	13,560005	5	0,00004	0,01
+30	13,560000	13,559982	-18	-0,00013	0,01
+40	13,560000	13,559961	-39	-0,00029	0,01
+50	13,560000	13,559984	-16	-0,00012	0,01

Result: Test passed

FREQUENCY STABILITY VS. SUPPLY VOLTAGE — Section 15.225 (c)

EUT: ID CPR.02
Serial number: 0001
Applicant: FEIG ELECTRONIC GmbH

Mode:

Date of test: June, 2002
Operator: Thomas Eberl

Test conditions:

Temperature: +20°C
Nominal supply voltage: 24.0 V DC

Specifications:

Frequency tolerance: ±0.01 % of nominal carrier frequency
Voltage range: ±15 % of nominal supply voltage

Supply voltage (V)	Nominal carrier frequency (MHz)	Frequency measured (MHz)	Frequency deviation (Hz)	Frequency deviation (%)	Limit (%)
12.00	13.560000	13.560005	5	0.00004	0.01
18.00	13.560000	13.560005	5	0.00004	0.01
24.00	13.560000	13.560005	5	0.00004	0.01

Result: Test passed

12. Charts taken during testing

Radiated Emission Test 9 kHz - 30 MHz
according to FCC Part 15 Subpart C

Model: ID CPR.02	Mode: - FCC test setup
Serial no.: 01	- EUT DC powered 24 V
Applicant: Feig Electronic GmbH	- Reding distance - Tag to Reader: 50 mm
Test site: Shielded room, cabin no. 3	
Tested on: Test distance 3 metres Antenna parallel to EUT	
Date of test: 06/12/2002 — Operator: T. Eberl	
Test performed: automatically — File name:	

Detector: Peak / Final Results: QP	Final results: 20 dB Margin — 25 Subranges

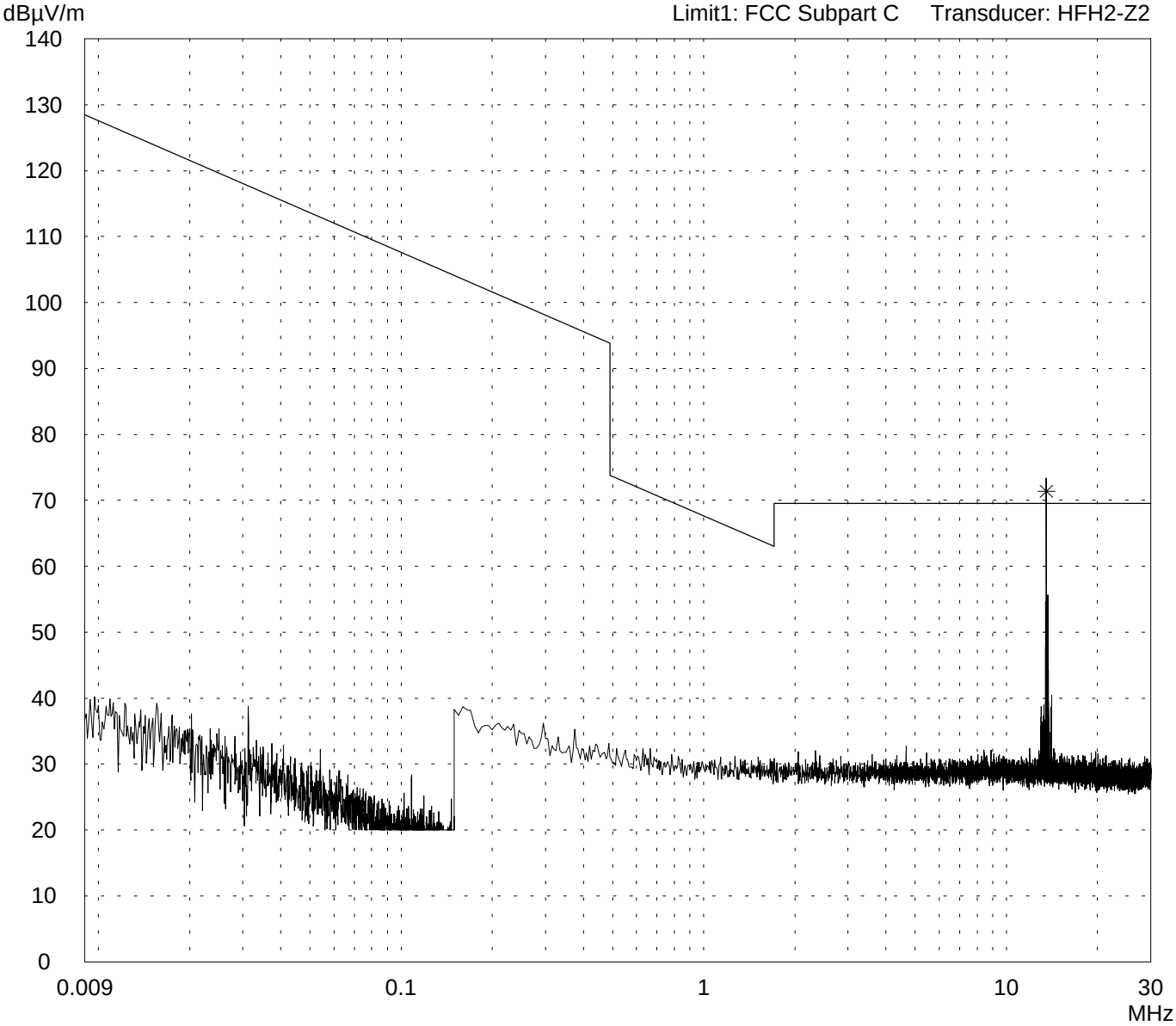

Result: Prescan	Project file: 50602-20327 — Page of Pages

Radiated Emission Test 30 MHz - 200 MHz
acc. to FCC Part 15 (Fully Anechoic Chamber)

Model: ID CPR.02	Comment:
Serial no.: 01	- FCC test setup
Applicant: Feig Electronic GmbH	- EUT DC powered 24 V
Test site: Fully anechoic room	- Reading distance - Tag to Reader: 50 mm
Tested on: Test distance 3 metres Horizontal Polarization	
Date of test: 05/21/2002 / Operator:	
Test performed: automatically / File name: default.emi	

Detector: Peak	List of values: 10 dB Margin / 16 Subranges

dBµV/m Limit1: FCC Part 15 Transducer: HK 116 (Inv 1560)

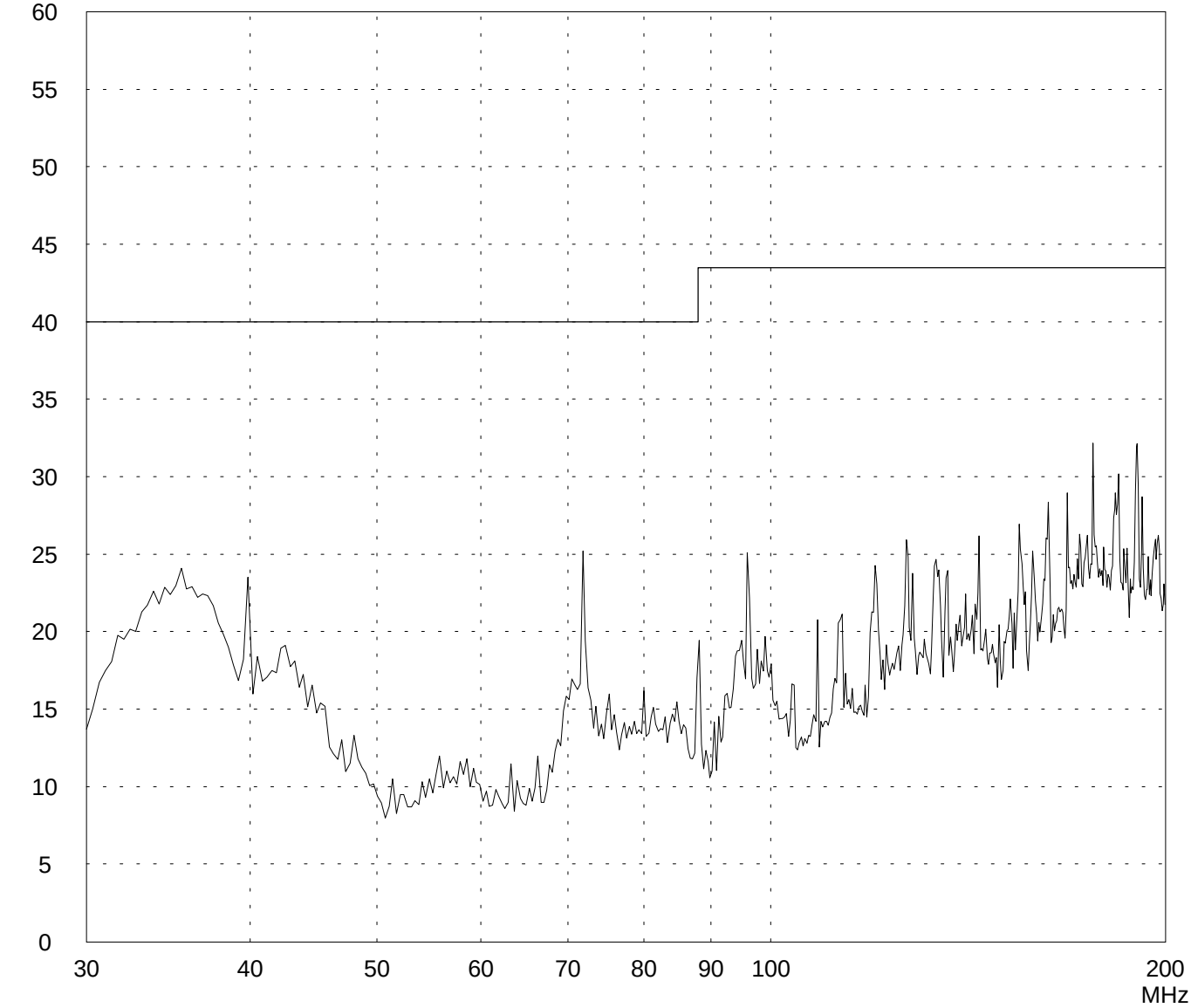

Result: Prescan	Project file: 50602-20327 Page of Pages

Radiated Emission Test 200 MHz - 1 GHz
acc. to FCC Part 15 (Fully Anechoic Chamber)

Model: ID CPR.02	Comment:
Serial no.: 01	- FCC test setup
Applicant: Feig Electronic GmbH	- EUT DC powered 24 V
Test site: Fully anechoic room	- Reading distance - Tag to Reader: 50 mm
Tested on: Test distance 3 metres Horizontal Polarization	
Date of test: 05/21/2002 — Operator:	
Test performed: automatically — File name: default.emi	

Detector: Peak	List of values: 10 dB Margin — 16 Subranges

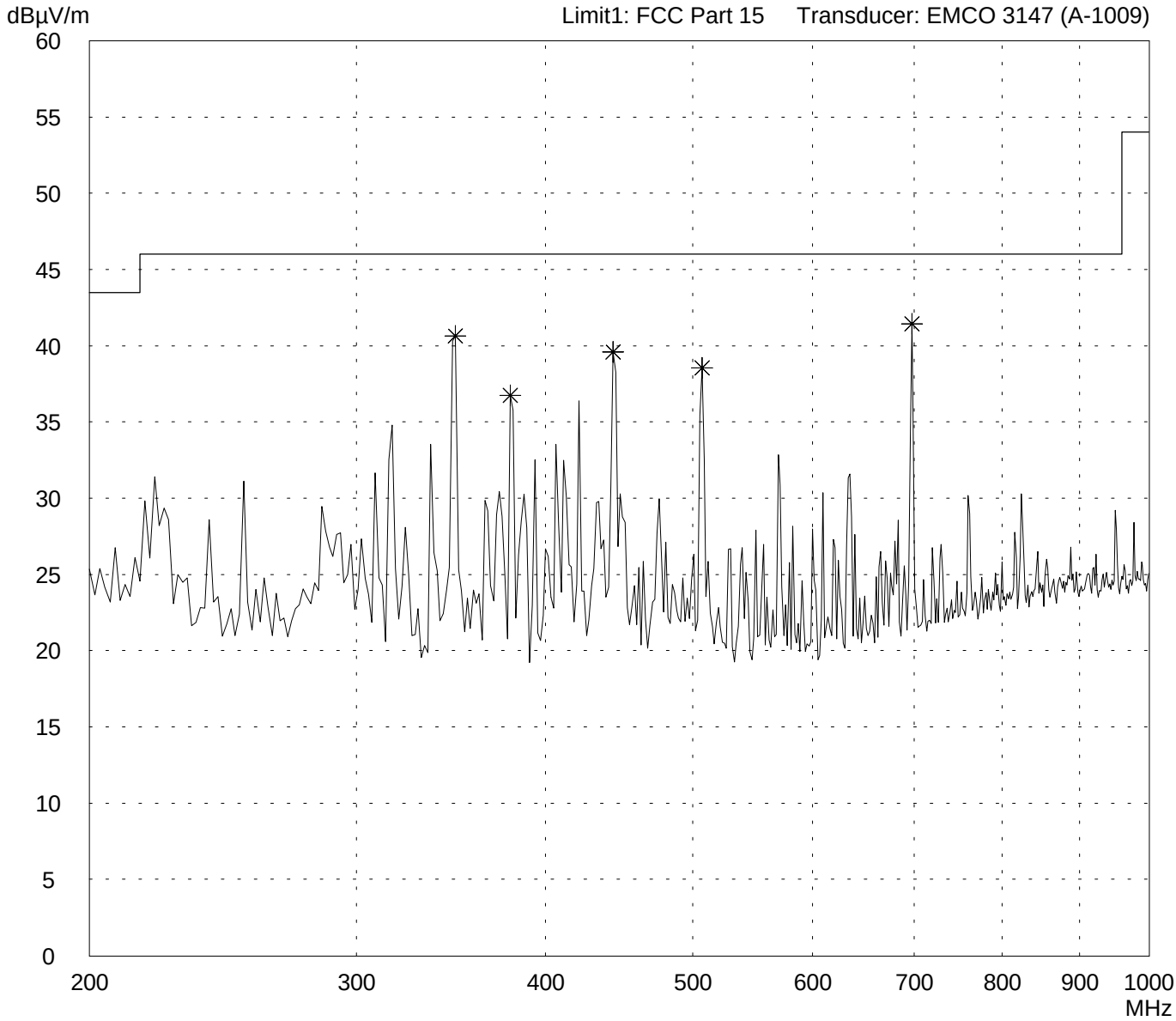

Result: Prescan	Project file: 50602-20327 — Page of Pages

Radiated Emission Test 30 MHz - 200 MHz
acc. to FCC Part 15 (Fully Anechoic Chamber)

Model: ID CPR.02	Comment:
Serial no.: 01	- FCC test setup
Applicant: Feig Electronic GmbH	- EUT DC powered 24 V
Test site: Fully anechoic room	- Reading distance - Tag to Reader: 50 mm
Tested on: Test distance 3 metres Vertical Polarization	
Date of test: 05/21/2002 — Operator:	
Test performed: automatically — File name: default.emi	

Detector: Peak	List of values: 10 dB Margin — 16 Subranges

Limit1: FCC Part 15 Transducer: HK 116 (Inv 1560)

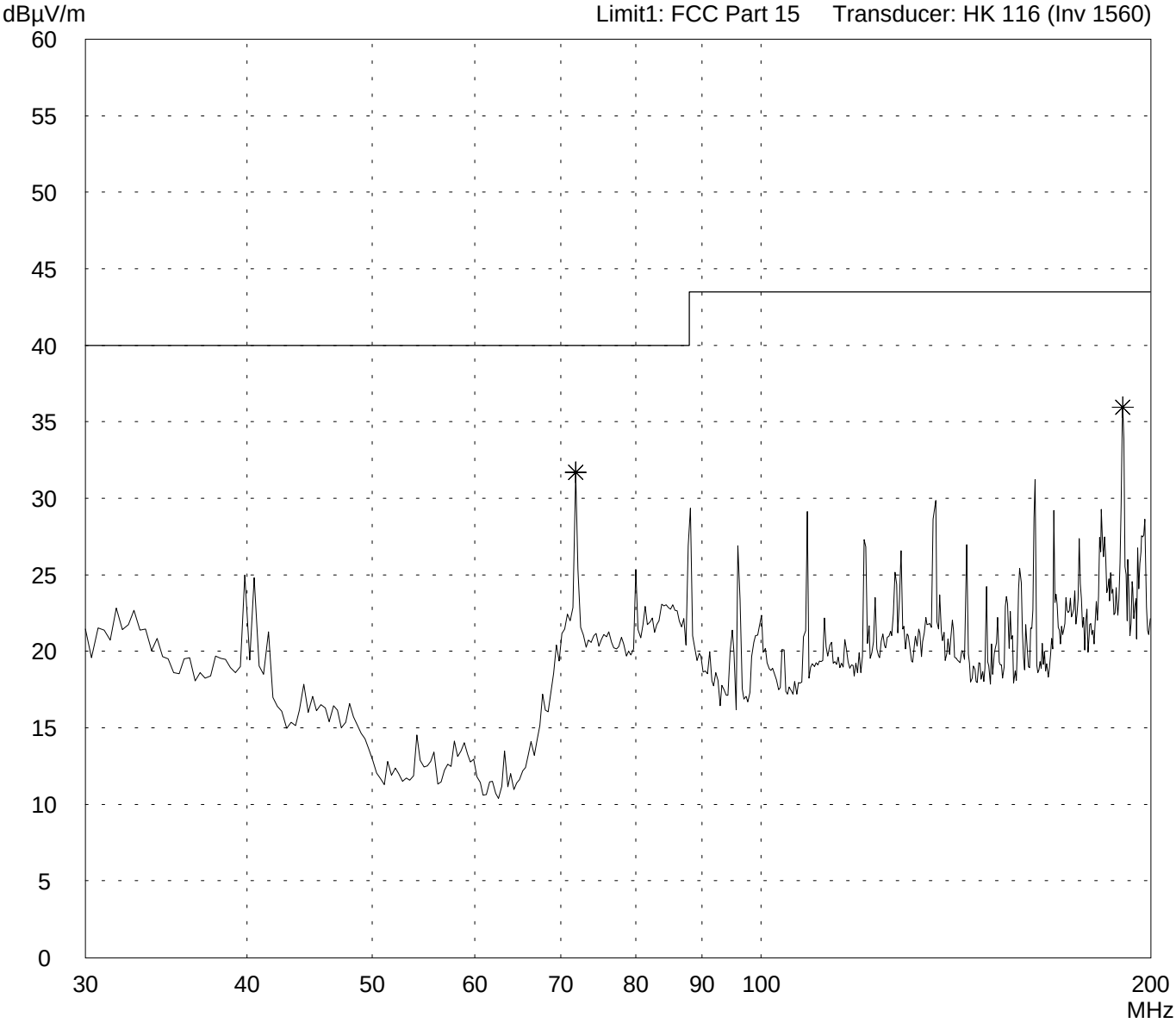

Result: Prescan	Project file: 50602-20327 Page of Pages

Radiated Emission Test 200 MHz - 1 GHz
acc. to FCC Part 15 (Fully Anechoic Chamber)

Model: ID CPR.02	Comment:
Serial no.: 01	- FCC test setup
Applicant: Feig Electronic GmbH	- EUT DC powered 24 V
Test site: Fully anechoic room	- Reading distance - Tag to Reader: 50 mm
Tested on: Test distance 3 metres Vertical Polarization	
Date of test: 05/21/2002 — Operator:	
Test performed: automatically — File name: default.emi	

Detector: Peak	List of values: 10 dB Margin — 16 Subranges

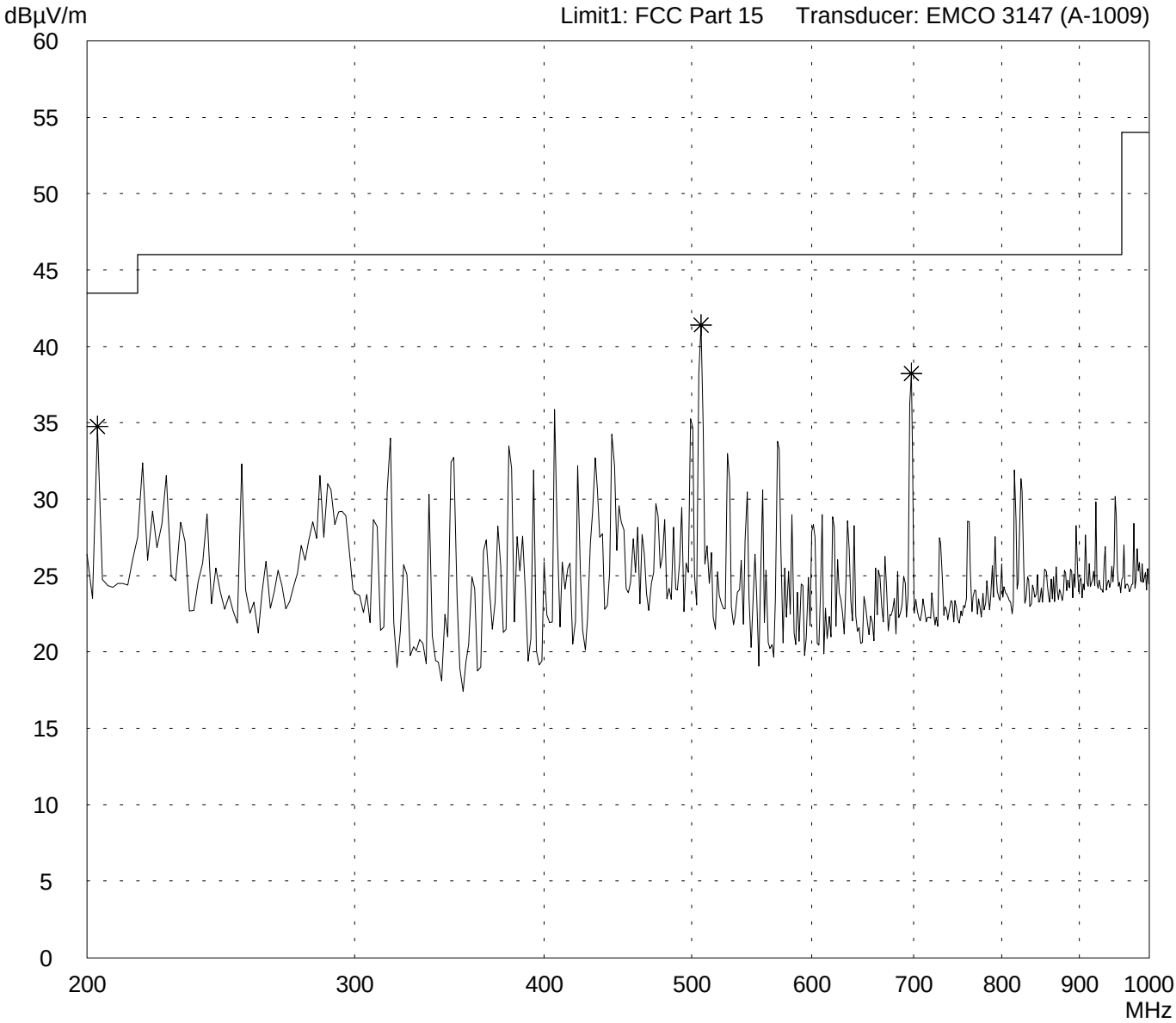

Result: Prescan	Project file: 50602-20327 — Page of Pages

Radiated Emission Test 30 MHz - 1 GHz
according to FCC Part 15 Subpart C

Model: ID CPR.02	Mode: - FCC test setup
Serial no.: 01	- EUT DC powered 24 V
Applicant: Feig Electronic GmbH	- Reading distance - Tag to Reader : 50 mm
Test site: Open area test-site I	
Tested on: Test distance 3 meters Horizontal Polarization	
Date of test: 05/21/2002 / Operator: T. Eberl	
Test performed: by hand / File name:	
Detector: Quasi-Peak	List of values: Selected by hand

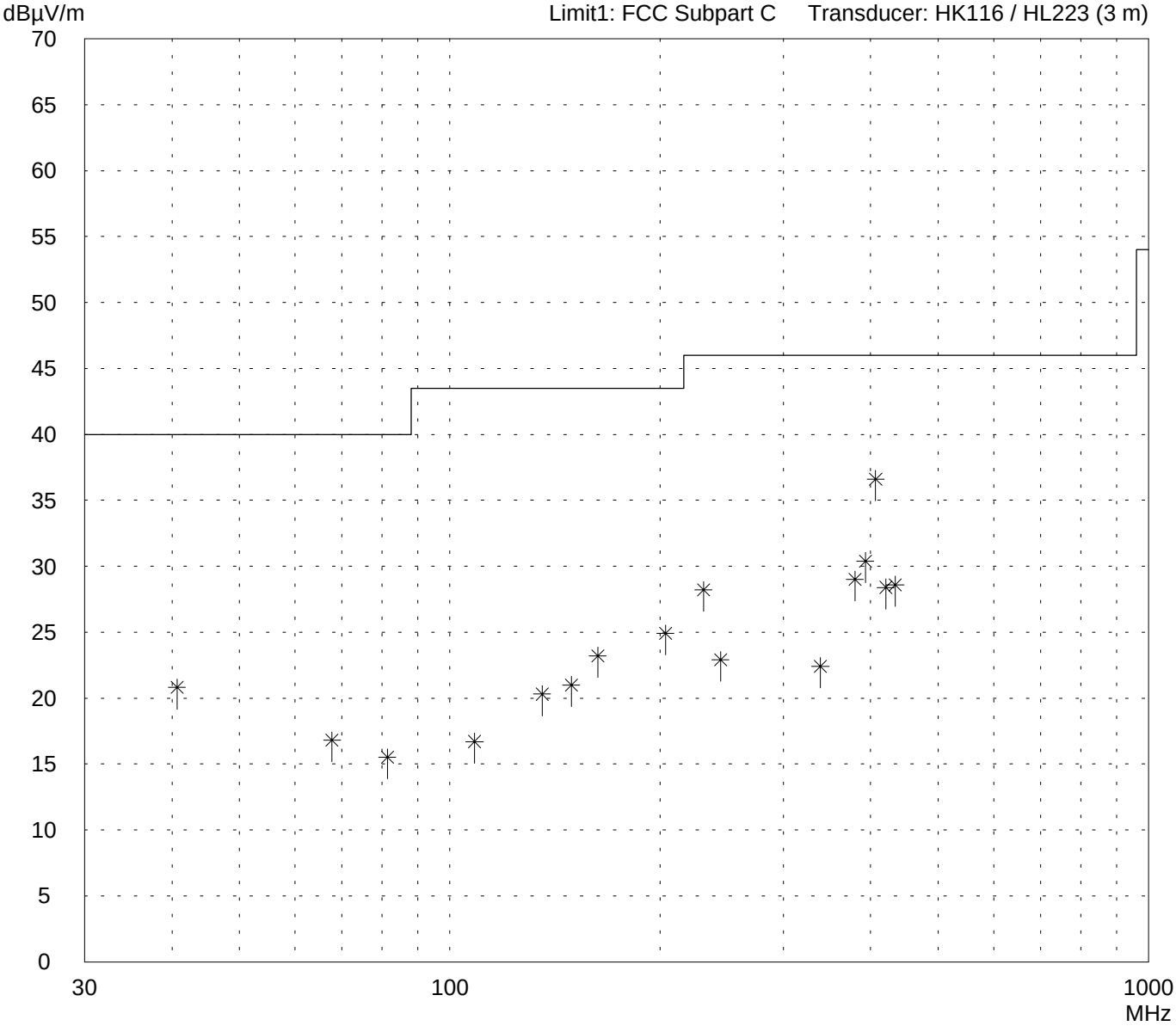

Result: Limit kept	Project file: 50602-20327 Page of Pages

Radiated Emission Test 30 MHz - 1 GHz
according to FCC Part 15 Subpart C

Model: ID CPR.02	Mode: - FCC test setup
Serial no.: 01	- EUT DC powered 24 V
Applicant: Feig Electronic GmbH	- Reading distance - Tag to Reader : 50 mm
Test site: Open area test-site I	
Tested on: Test distance 3 meters Horizontal Polarization	
Date of test: 05/21/2002 — Operator: T. Eberl	
Test performed: by hand — File name:	

Detector: Quasi-Peak	List of values: Selected by hand

Frequency MHz	*Reading dBµV*	*Correction factor dB*	*Value dBµV/m*	*Limit dBµV/m*	*Limit exceeded*
40.670	8.0	12.8	20.8	40.0	
67.795	6.0	10.8	16.8	40.0	
81.350	4.5	11.0	15.5	40.0	
108.400	3.5	13.2	16.7	43.5	
135.500	4.8	15.5	20.3	43.5	
149.150	4.7	16.3	21.0	43.5	
162.710	6.5	16.7	23.2	43.5	
203.390	5.8	19.1	24.9	43.5	
230.500	8.2	20.0	28.2	46.0	
244.000	2.6	20.3	22.9	46.0	
338.990	2.0	20.4	22.4	46.0	
379.660	7.2	21.8	29.0	46.0	
393.220	8.2	22.2	30.4	46.0	
406.799	14.0	22.6	36.6	46.0	
420.359	5.4	23.0	28.4	46.0	
433.919	5.3	23.3	28.6	46.0	

Result: Limit kept	Project file: 50602-20327 Page of Pages

Radiated Emission Test 30 MHz - 1 GHz
according to FCC Part 15 Subpart C

Model: ID CPR.02	Mode: - FCC test setup
Serial no.: 01	- EUT DC powered 24 V
Applicant: Feig Electronic GmbH	- Reading distance - Tag to Reader : 50 mm
Test site: Open area test-site I	
Tested on: Test distance 3 meters Vertical Polarization	
Date of test: 05/21/2002 / Operator: T. Eberl	
Test performed: by hand / File name:	
Detector: Quasi-Peak	List of values: Selected by hand

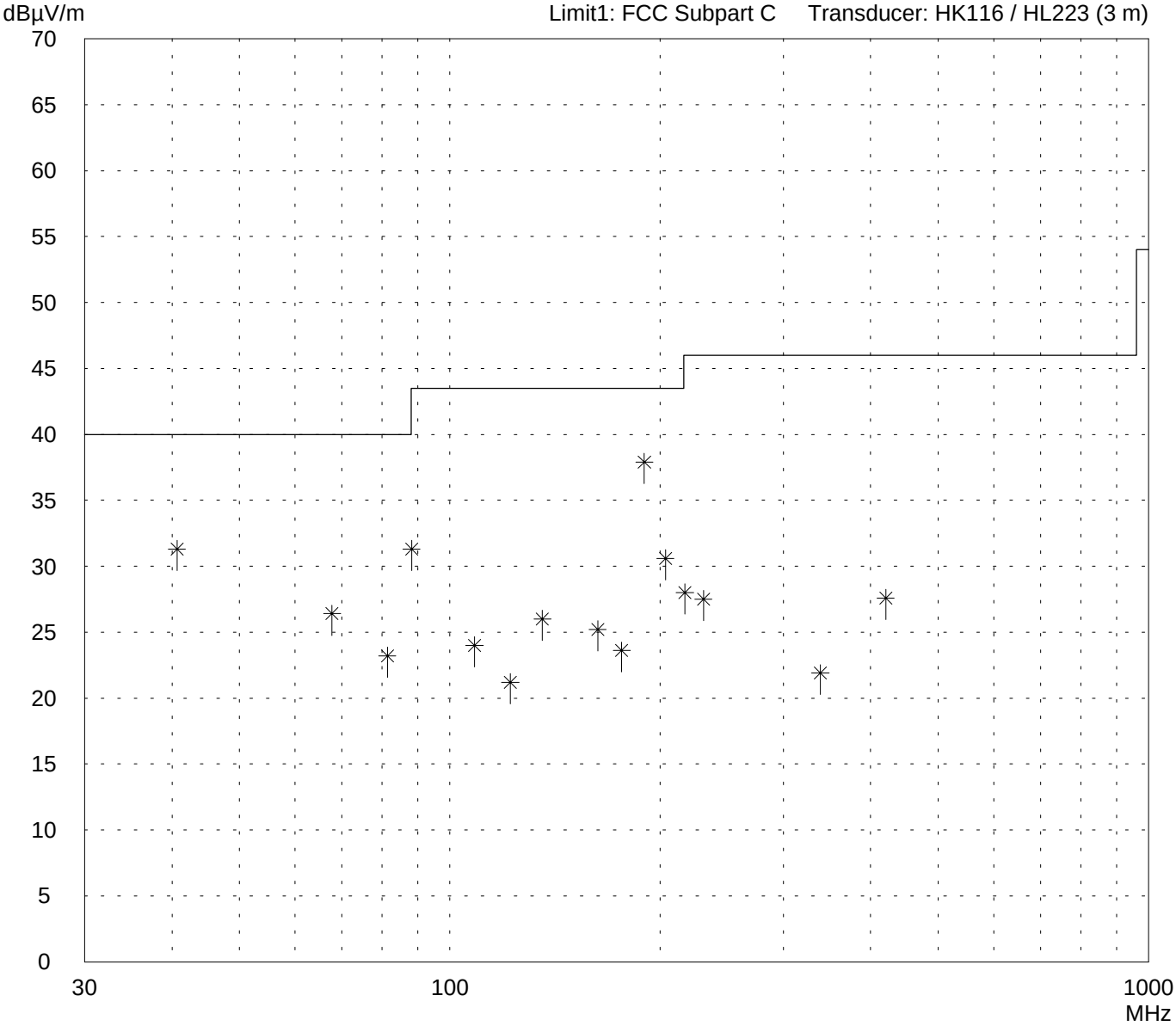

Result: Limit kept	Project file: 50602-20327 Page of Pages

Radiated Emission Test 30 MHz - 1 GHz
according to FCC Part 15 Subpart C

Model: ID CPR.02	Mode: - FCC test setup
Serial no.: 01	- EUT DC powered 24 V
Applicant: Feig Electronic GmbH	- Reading distance - Tag to Reader : 50 mm
Test site: Open area test-site I	
Tested on: Test distance 3 meters Vertical Polarization	
Date of test: 05/21/2002 — Operator: T. Eberl	
Test performed: by hand — File name:	

Detector: Quasi-Peak	List of values: Selected by hand

Frequency MHz	*Reading dBµV*	*Correction factor dB*	*Value dBµV/m*	*Limit dBµV/m*	*Limit exceeded*
40.675	18.5	12.8	31.3	40.0	
67.795	15.6	10.8	26.4	40.0	
81.355	12.2	11.0	23.2	40.0	
88.100	20.0	11.3	31.3	43.5	
108.400	10.8	13.2	24.0	43.5	
122.000	6.5	14.7	21.2	43.5	
135.600	10.5	15.5	26.0	43.5	
162.700	8.5	16.7	25.2	43.5	
176.200	6.0	17.6	23.6	43.5	
189.800	19.4	18.5	37.9	43.5	
203.400	11.5	19.1	30.6	43.5	
216.900	8.5	19.5	28.0	46.0	
230.500	7.5	20.0	27.5	46.0	
338.990	1.5	20.4	21.9	46.0	
420.358	4.6	23.0	27.6	46.0	

Result: Limit kept	Project file: 50602-20327 Page of Pages