FCC TEST REPORT

Authorized under **D**eclaration **o**f **C**onformity

according to

47 CFR Part 2 Part 15 Subpart B

Equipment	**: GSM900/DCS1800/PCS1900 Tri Band Mobile Phone**
Trade Name	**: Arima**
Model No.	**: 2716**
FCC ID	**: PJO-KMP6J1CB**
Filing Type	**: Certification**
Applicant	**: Arima Communications Corporation No. 16, Lane 658, Ying Tao Road, Yingko Taipei Hsien, Taiwan**

- The test result refers exclusively to the test presented test model / sample.
- Without written approval of SPORTON International Inc., the test report shall not be reproduced except in full.
- Certificate or Test Report must not be used by the applicant to claim the product in this test report endorsement by NVLAP or any agency of U.S. government.

SPORTON International Inc.

6F, No.106, Sec. 1, Hsin Tai Wu Rd., Hsi Chih, Taipei Hsien, Taiwan, R.O.C.

Table of Contents

History of this test report ii
CERTIFICATE OF COMPLIANCE 1
1. General Description of Equipment under Test 2
1.1 Applicant 2
1.2 Manufacture 2
1.3 Basic Description of Equipment under Test 2
1.4 Feature of Equipment under Test 2
2. Test Configuration of Equipment under Test 3
2.1 Test Manner 3
2.2 Description of Test System 3
2.3 Connection Diagram of Test System 4
3. Test Software 5
4. General Information of Test 6
4.1 Test Facility 6
4.2 Test Voltage 6
4.3 Standard for Methods of Measurement 6
4.4 Test in Compliance with 6
4.5 Frequency Range Investigated 6
4.6 Test Distance 6
5. Test of Conducted Powerline 7
5.1 Major Measuring Instruments 7
5.2 Test Procedures 7
5.3 Typical Test Setup Layout of Conducted Powerline 8
5.4 Test Result of AC Powerline Conducted Emission 9
5.5 Photographs of Conducted Powerline Test Configuration 15
6. Test of Radiated Emission 17
6.1 Major Measuring Instruments 17
6.2 Test Procedures 17
6.3 Typical Test Setup Layout of Radiated Emission 18
6.4 Test Result of Radiated Emission 19
6.5 Photographs of Radiated Emission Test Configuration 36
7. List of Measuring Equipment Used 39
8. Uncertainty of Evaluation 40
9. Certificate of NVLAP Accreditation 42
Appendix A. Photographs of EUT

History of this test report

Report Issue Date: Aug. 30, 2005

Original Report Issue Date	Description

Certificate No. : FD572116

CERTIFICATE OF COMPLIANCE

Authorized under **D**eclaration **o**f **C**onformity

according to

47 CFR Part 2 and Part 15 Subpart B Class B

Equipment	**: GSM900/DCS1800/PCS1900 Tri Band Mobile Phone**
Trade Name	**: Arima**
Model No.	**: 2716**
FCC ID	**: PJO-KMP6J1CB**
Filing Type	**: Certification**
Applicant	**: Arima Communications Corporation** No. 16, Lane 658, Ying Tao Road, Yingko Taipei Hsien, Taiwan

I **HEREBY** CERTIFY THAT:

The measurements shown in this test report were made in accordance with the procedures given in **ANSI C63.4 - 2003** and the energy emitted by this equipment was ***passed*** **FCC Part 15 B** in both radiated and conducted emission class B limits. Testing was carried out on Jul. 29, 2005 at **SPORTON International Inc.** LAB.

Dr. Daniel Lee
EMC / SAR Manager

SPORTON International Inc.
6F, No.106, Sec. 1, Hsin Tai Wu Rd., Hsi Chih, Taipei Hsien, Taiwan, R.O.C.

1. General Description of Equipment under Test

1.1 Applicant

Arima Communications Corporation
No. 16, Lane 658, Ying Tao Road, Yingko Taipei Hsien, Taiwan

1.2 Manufacture

Arima Communications Corporation
No. 16, Lane 658, Ying Tao Road, Yingko Taipei Hsien, Taiwan

1.3 Basic Description of Equipment under Test

Equipment	:	GSM900/DCS1800/PCS1900 Tri Band Mobile Phone
Trade Name	:	Arima
Model No.	:	2716
FCC ID	:	PJO-KMP6J1CB
Power Supply Type	:	Switching
AC Power Cord	:	AC 120V, Non-Shielded, Wall-mount, 1.8 meter, 2 pin
Earphone	:	Viking Design Tech，EE-610-51EN
Car Charger	:	SEMDICAR，IC-2600-YT1B
Adapter 1	:	PI, P925BW05050BB71
Adapter 2	:	PI, P925BW05050EB71
Battery	:	SANYO, 1UF463450F-ARCC-2

1.4 Feature of Equipment under Test

Product Feature & Specification	
1. DUT Type :	GSM900/DCS1800/PCS1900 Tri Band Mobile Phone
2. Trade Name :	Arima
3. Model Name :	2716
4. FCC ID :	PJO-KMP6J1CB
6. Tx Frequency :	1850 -1910MHz
7. Rx Frequency :	1930 -1990MHz
8. Antenna Type :	Fixed Internal
9. Maximum Output Power :	29.49 dBm
10. HW Version :	P1B
11. SW Version :	P8K
12. Type of Modulation :	GMSK
13. DUT Stage :	Production Unit
14. Power Rating (DC/AC, Voltage)	NA

2. Test Configuration of Equipment under Test

2.1 Test Manner

a. The EUT has been setup pursuant to ANSI C63.4-2003 and configuration operated in a manner which tended to maximize its emission characteristics in a typical application.

b. The complete test system included EUT for EMI test.

c. The following test mode was tested for conduction:
Mode 1 : PCS1900 Idle Mode + Earphone + Camera + Adapter 1
Mode 2 : PCS1900 Idle Mode + Earphone + Camera + Adapter 2
Mode 3 : PCS1900 Idle Mode + USB Link

d. The following test modes were tested for radiation test:
Mode 1 : PCS Idle Mode + Camera + Earphone + Adapter 1
Mode 2 : PCS Idle Mode + Camera + Earphone + Adapter 2
Mode 3 : PCS1900 Idle Mode + Camera + Earphone + Car Charger (for 12Vdc)
Mode 4 : PCS1900 Idle Mode + Camera + Earphone + Car Charger (for 24Vdc)
Mode 5 : PCS1900 Idle Mode + USB Link + Earphone

e. Frequency range investigated: conduction 150 kHz to 30 MHz, radiation 30 MHz to 13000MHz.

2.2 Description of Test System

Item	Asset	Model Name	Power Cord
1.	Base Station (R&S)	CMU200	N/A
2.	Earphone (Viking Design Tech)	EE-610-51EN	N/A
3.	(USB)MOUSE (LOGITECH)	M-EB58	N/A
4.	NOTEBOOK (DELL)	PP05L	N/A

2.3 Connection Diagram of Test System

<Mode 1~2>

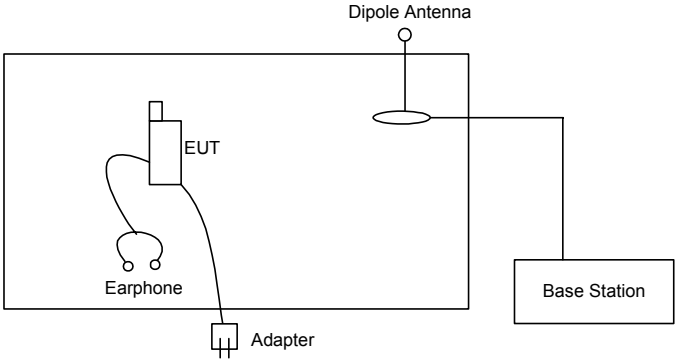

<Mode 3~4>

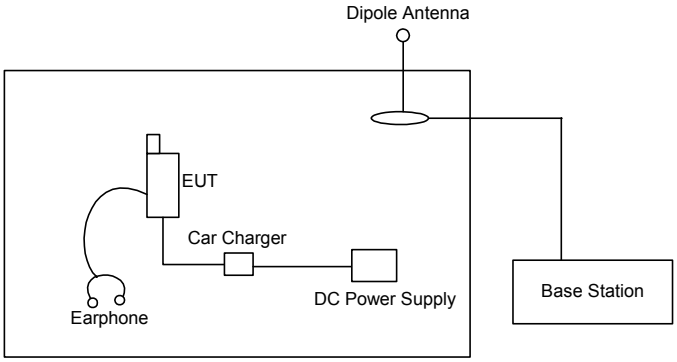

<Mode 5>

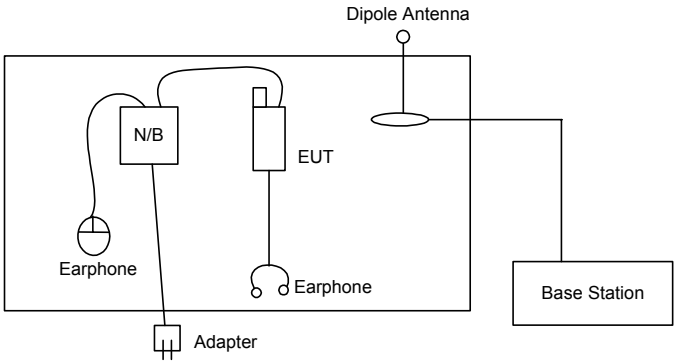

3. Test Software

The EUT is in PCS 1900 Idle mode controlled by Base Station Simulator.

4. General Information of Test

4.1 Test Facility

Test Site Location	:	No. 52, Hwa Ya 1st Rd., Hwa Ya Technology Park, Kwei-Shan Hsiang, Tao Yuan Hsien, Taiwan, R.O.C. TEL : 886-3-327-3456 FAX : 886-3-318-0055
Test Site No.	:	CO01-HY, 03CH06-HY

4.2 Test Voltage

120V/60Hz

4.3 Standard for Methods of Measurement

ANSI C63.4-2003

4.4 Test in Compliance with

FCC Part 15, Subpart B

4.5 Frequency Range Investigated

a. Conduction: from 150 kHz to 30 MHz
b. Radiation: from 30 MHz to 25000MHz

4.6 Test Distance

The test distance of radiated emission from antenna to EUT is 3m.

5. Test of Conducted Powerline

Conducted Emissions were measured from 150 kHz to 30 MHz with a bandwidth of 9 kHz and return leads of the EUT according to the methods defined in ANSI C63.4-2003 Section 3.1. The EUT was placed on a nonmetallic stand in a shielded room 0.8 meters above the ground plane as shown in section 5.3. The interface cables and equipment positioning were varied within limits of reasonable applications to determine the position produced maximum conducted emissions.

5.1 Major Measuring Instruments

As described in Chapter 7.

5.2 Test Procedures

a. The EUT was placed 0.4 meter from the conducting wall of the shielding room was kept at least 80 centimeters from any other grounded conducting surface.
b. Connect EUT to the power mains through a line impedance stabilization network (LISN).
c. All the support units are connect to the other LISN.
d. The LISN provides 50 ohm coupling impedance for the measuring instrument.
e. The FCC states that a 50 ohm, 50 microhenry LISN should be used.
f. Both sides of AC line were checked for maximum conducted interference.
g. The frequency range from 150 kHz to 30 MHz was searched.
h. Set the test-receiver system to Peak Detect Function and specified bandwidth with Maximum Hold Mode.

5.3 Typical Test Setup Layout of Conducted Powerline

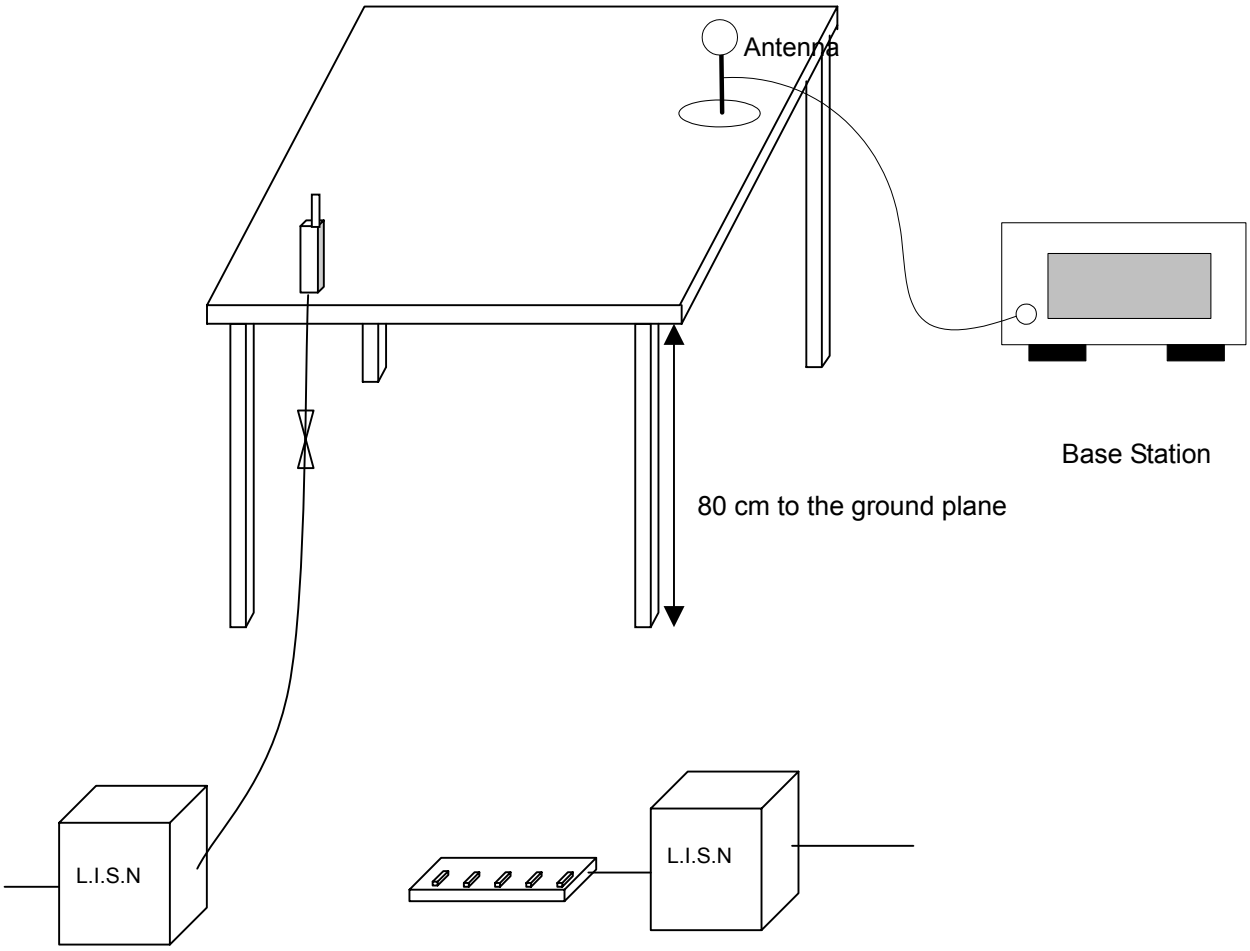

5.4 Test Result of AC Powerline Conducted Emission

5.4.1 Test Mode: Mode 1

- Frequency Range of Test: from 0.15 MHz to 30 MHz
- Temperature: 26°C
- Relative Humidity: 60%
- All emissions not reported here are more than 10 dB below the prescribed limit.

The test that passed at the minimum margin was marked by a frame in the following data

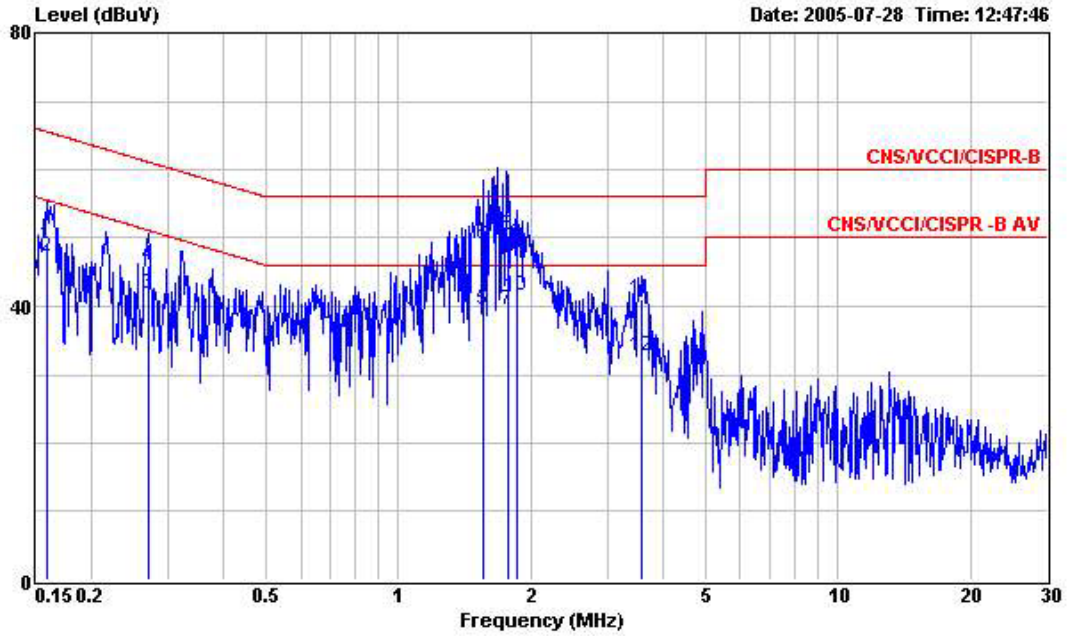

Site : CO01-HY
Condition : CNS/VCCI/CISPR-B 2005 2001/008 LINE
EUT : GSM Tri Band Mobile Phone
Power : 120Vac/60Hz
Model : FD572116
Memo : PCS1900 IDLE + EARPHONE +CAMERA
Memo : + CHARGER
: (P925BW 05050BB71)

	Freq	Level	Over Limit	Limit Line	Read Level	Probe Factor	Cable Loss	Remark
	MHz	dBuV	dB	dBuV	dBuV	dB	dB	
1	0.158	49.21	-16.36	65.57	49.08	0.10	0.03	QP
2	0.158	47.37	-8.20	55.57	47.24	0.10	0.03	Average
3	0.270	41.78	-9.34	51.12	41.67	0.10	0.01	Average
4	0.270	46.05	-15.07	61.12	45.94	0.10	0.01	QP
5	1.563	39.57	-6.43	46.00	39.40	0.10	0.07	Average
6	1.563	49.21	-6.79	56.00	49.04	0.10	0.07	QP
7	1.779	39.61	-6.39	46.00	39.43	0.10	0.08	Average
8	1.779	50.31	-5.69	56.00	50.13	0.10	0.08	QP
9	1.870	49.16	-6.84	56.00	48.98	0.10	0.08	QP
10	1.870	41.62	-4.38	46.00	41.44	0.10	0.08	Average
11	3.567	41.02	-14.98	56.00	40.71	0.18	0.13	QP
12	3.567	32.70	-13.30	46.00	32.39	0.18	0.13	Average

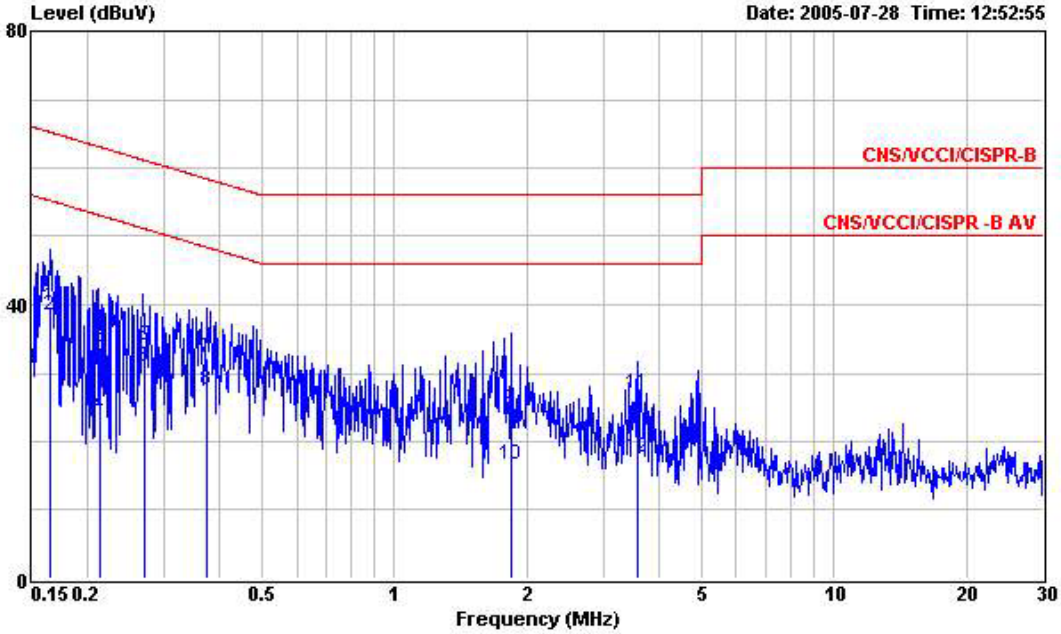

Site : CO01-HY
Condition : CNS/VCCI/CISPR-B 2005 2001/008 NEUTRAL
EUT : GSM Tri Band Mobile Phone
Power : 120Vac/60Hz
Model : FD572116
Memo : PCS1900 IDLE + EARPHONE +CAMERA
Memo : + CHARGER
: (P925BW 05050BB71)

	Freq	Level	Over Limit	Limit Line	Read Level	Probe Factor	Cable Loss	Remark
	MHz	dBuV	dB	dBuV	dBuV	dB	dB	
1	0.164	39.85	-25.41	65.26	39.73	0.10	0.02	QP
2	0.164	38.48	-16.78	55.26	38.36	0.10	0.02	Average
3	0.214	33.75	-29.30	63.05	33.65	0.10	0.00	QP
4	0.214	23.92	-29.13	53.05	23.82	0.10	0.00	Average
5	0.269	33.91	-27.24	61.15	33.80	0.10	0.01	QP
6	0.269	31.03	-20.12	51.15	30.92	0.10	0.01	Average
7	0.374	32.30	-26.12	58.42	32.18	0.10	0.02	QP
8	0.374	27.66	-20.76	48.42	27.54	0.10	0.02	Average
9	1.839	24.78	-31.22	56.00	24.60	0.10	0.08	QP
10	1.839	16.56	-29.44	46.00	16.38	0.10	0.08	Average
11	3.570	27.03	-28.97	56.00	26.72	0.18	0.13	QP
12	3.570	17.67	-28.33	46.00	17.36	0.18	0.13	Average

Test Engineer : Jay

5.4.2 Test Mode: Mode 2

- Frequency Range of Test: from 0.15 MHz to 30 MHz
- Temperature: 26°C
- Relative Humidity: 60%
- All emissions not reported here are more than 10 dB below the prescribed limit.

The test that passed at the minimum margin was marked by a frame in the following data

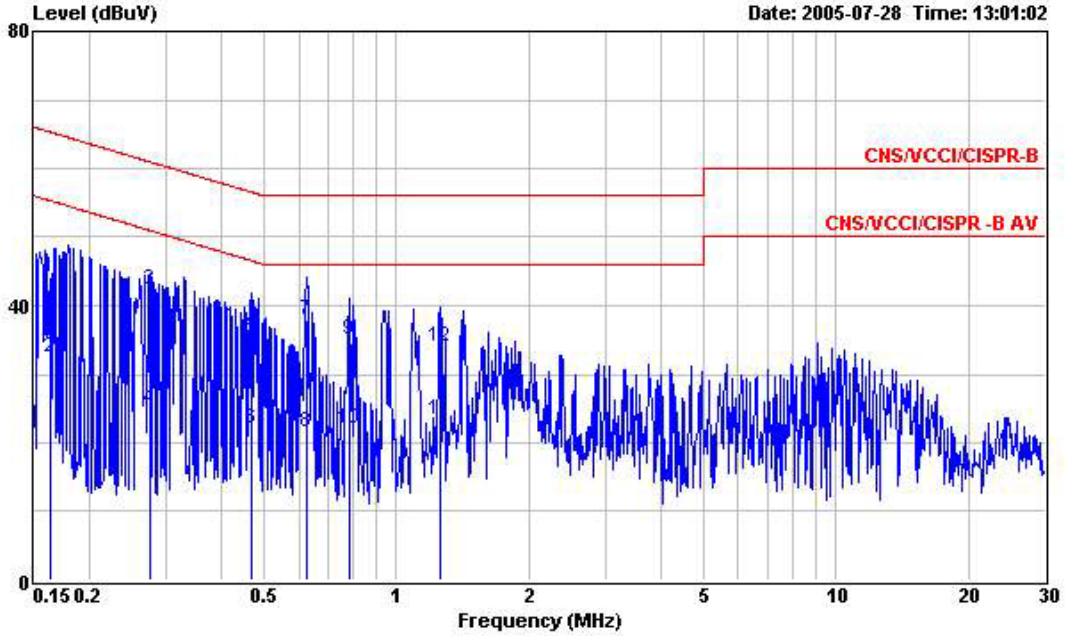

Site : CO01-HY
Condition : CNS/VCCI/CISPR-B 2005 2001/008 LINE
EUT : GSM Tri Band Mobile Phone
Power : 120Vac/60Hz
Model : FD572116
Memo : PCS1900 IDLE + EARPHONE +CAMERA
Memo : + CHARGER
: (P925BW 05050EB71)

	Freq	Level	Over Limit	Limit Line	Read Level	Probe Factor	Cable Loss	Remark
	MHz	dBuV	dB	dBuV	dBuV	dB	dB	
1	0.163	44.14	-21.16	65.30	44.02	0.10	0.02	QP
2	0.163	32.43	-22.87	55.30	32.31	0.10	0.02	Average
3	0.275	42.25	-18.73	60.98	42.14	0.10	0.01	QP
4	0.275	24.86	-26.12	50.98	24.75	0.10	0.01	Average
5	0.466	35.35	-21.23	56.58	35.22	0.10	0.03	QP
6	0.466	22.01	-24.57	46.58	21.88	0.10	0.03	Average
7	0.627	37.95	-18.05	56.00	37.81	0.10	0.04	QP
8	0.627	21.66	-24.34	46.00	21.52	0.10	0.04	Average
9	0.780	35.01	-20.99	56.00	34.86	0.10	0.05	QP
10	0.780	22.05	-23.95	46.00	21.90	0.10	0.05	Average
11	1.263	23.45	-22.55	46.00	23.28	0.10	0.07	Average
12	1.263	33.96	-22.04	56.00	33.79	0.10	0.07	QP

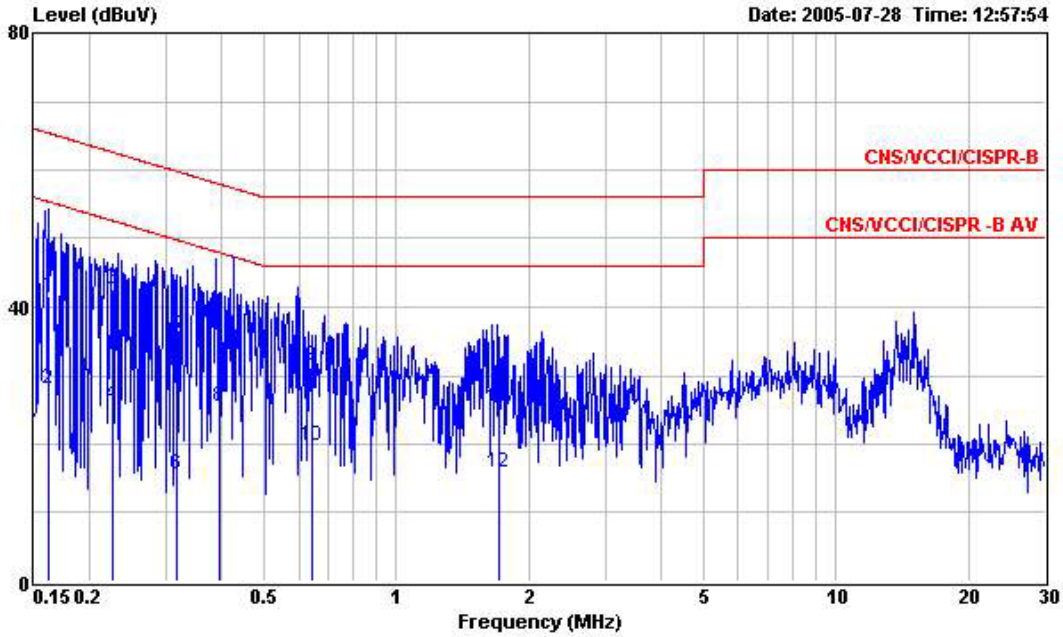

Site : CO01-HY
Condition : CNS/VCCI/CISPR-B 2005 2001/008 NEUTRAL
EUT : GSM Tri Band Mobile Phone
Power : 120Vac/60Hz
Model : FD572116
Memo : PCS1900 IDLE + EARPHONE +CAMERA
Memo : + CHARGER
: (P925BW 05050EB71)

	Freq	Level	Over Limit	Limit Line	Read Level	Probe Factor	Cable Loss	Remark
	MHz	dBuV	dB	dBuV	dBuV	dB	dB	
1	0.162	41.57	-23.79	65.36	41.45	0.10	0.02	QP
2	0.162	28.10	-27.26	55.36	27.98	0.10	0.02	Average
3	0.226	42.56	-20.05	62.61	42.46	0.10	0.00	QP
4	0.226	25.61	-27.00	52.61	25.51	0.10	0.00	Average
5	0.317	35.75	-24.04	59.79	35.64	0.10	0.01	QP
6	0.317	15.70	-34.09	49.79	15.59	0.10	0.01	Average
7	0.396	38.53	-19.41	57.94	38.41	0.10	0.02	QP
8	0.396	25.43	-22.51	47.94	25.31	0.10	0.02	Average
9	0.640	31.52	-24.48	56.00	31.38	0.10	0.04	QP
10	0.640	19.62	-26.38	46.00	19.48	0.10	0.04	Average
11	1.709	25.52	-30.48	56.00	25.34	0.10	0.08	QP
12	1.709	15.76	-30.24	46.00	15.58	0.10	0.08	Average

Test Engineer : Jay

5.4.3 Test Mode: Mode 3

- Frequency Range of Test: from 0.15 MHz to 30 MHz
- Temperature: 26°C
- Relative Humidity: 60%
- All emissions not reported here are more than 10 dB below the prescribed limit.

The test that passed at the minimum margin was marked by a frame in the following data

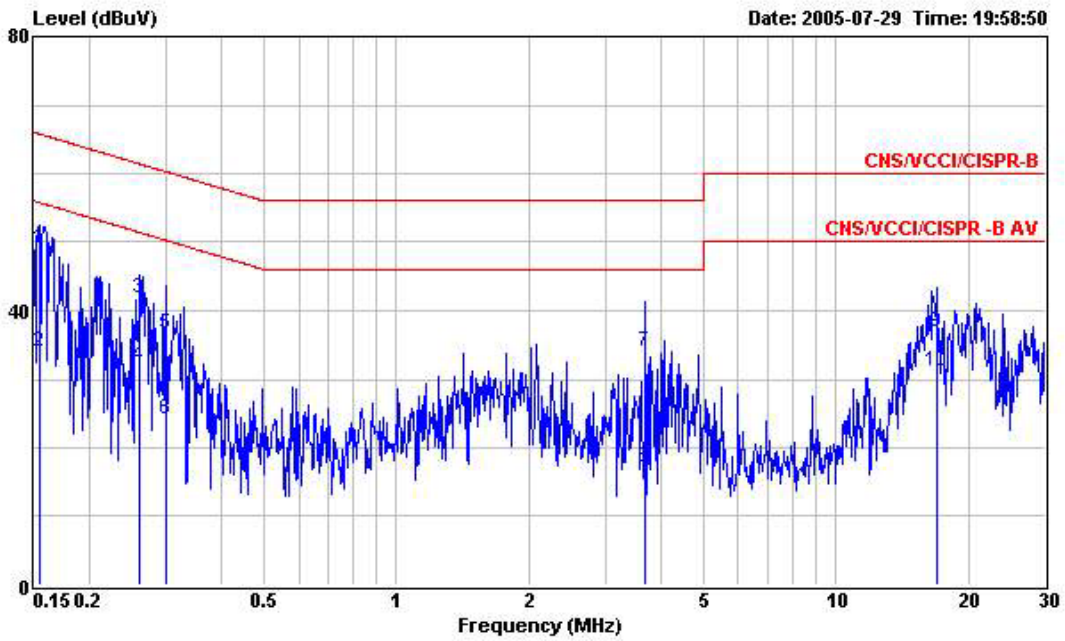

Site : CO01-HY
Condition : CNS/VCCI/CISPR-B 2005 2001/008 LINE
EUT : GSM Tri Band Mobile Phone
Power : 120Vac/60Hz
Model : FD572116
Memo : PCS1900 IDLE
Memo : USB LINK
: (P925B W 05050EB71)

	Freq	Level	Over Limit	Limit Line	Read Level	Probe Factor	Cable Loss	Remark
	MHz	dBuV	dB	dBuV	dBuV	dB	dB	
1	0.154	49.08	-16.70	65.78	48.95	0.10	0.03	QP
2	0.154	34.07	-21.71	55.78	33.94	0.10	0.03	Average
3	0.260	41.71	-19.72	61.43	41.60	0.10	0.01	QP
4	0.260	31.85	-19.58	51.43	31.74	0.10	0.01	Average
5	0.299	36.66	-23.61	60.27	36.55	0.10	0.01	QP
6	0.299	24.23	-26.04	50.27	24.12	0.10	0.01	Average
7	3.680	34.13	-21.87	56.00	33.81	0.19	0.13	QP
8	3.680	17.08	-28.92	46.00	16.76	0.19	0.13	Average
9	16.930	36.90	-23.10	60.00	36.41	0.30	0.19	QP
10	16.930	31.26	-18.74	50.00	30.77	0.30	0.19	Average

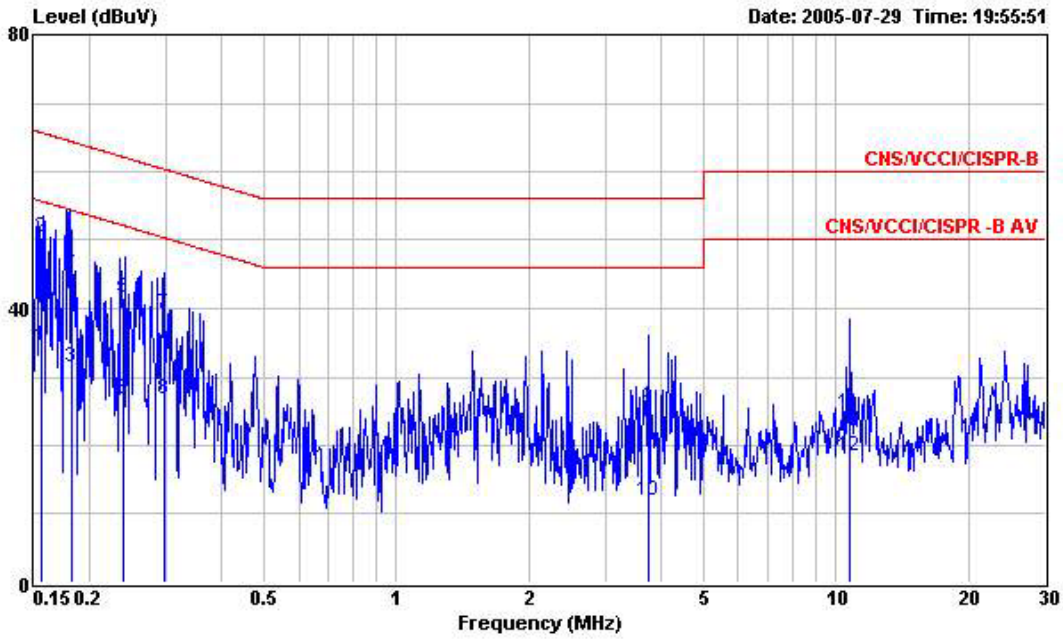

Site : CO01-HY
Condition : CNS/VCCI/CISPR-B 2005 2001/008 NEUTRAL
EUT : GSM Tri Band Mobile Phone
Power : 120Vac/60Hz
Model : FD572116
Memo : PCS1900 IDLE
Memo : USB LINK
: (P925BW 05050EB71)

	Freq	Level	Over Limit	Limit Line	Read Level	Probe Factor	Cable Loss	Remark
	MHz	dBuV	dB	dBuV	dBuV	dB	dB	
1	0.156	34.46	-21.21	55.67	34.33	0.10	0.03	Average
2	0.156	50.43	-15.24	65.67	50.30	0.10	0.03	QP
3	0.182	31.46	-22.93	54.39	31.35	0.10	0.01	Average
4	0.182	46.28	-18.11	64.39	46.17	0.10	0.01	QP
5	0.240	41.55	-20.55	62.10	41.44	0.10	0.01	QP
6	0.240	26.79	-25.31	52.10	26.68	0.10	0.01	Average
7	0.296	39.16	-21.19	60.35	39.05	0.10	0.01	QP
8	0.296	26.73	-23.62	50.35	26.62	0.10	0.01	Average
9	3.760	25.51	-30.49	56.00	25.19	0.19	0.13	QP
10	3.760	11.98	-34.02	46.00	11.66	0.19	0.13	Average
11	10.790	24.74	-35.26	60.00	24.30	0.30	0.14	QP
12	10.790	18.39	-31.61	50.00	17.95	0.30	0.14	Average

Test Engineer : Jay

5.5 Photographs of Conducted Powerline Test Configuration

Front View

Rear View

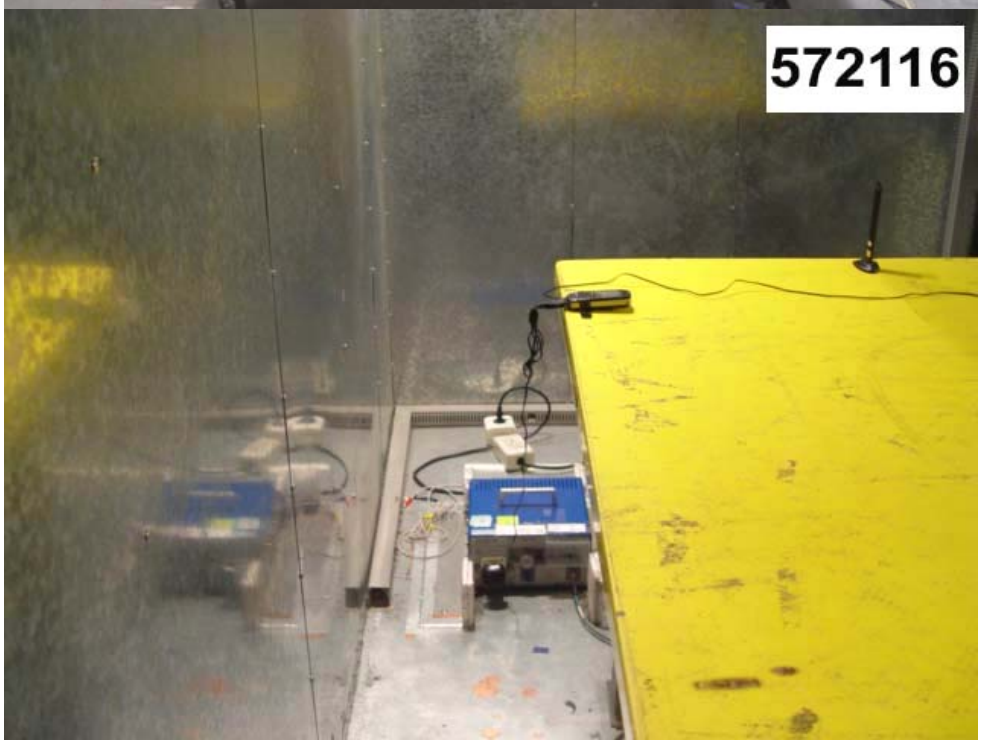

Side View

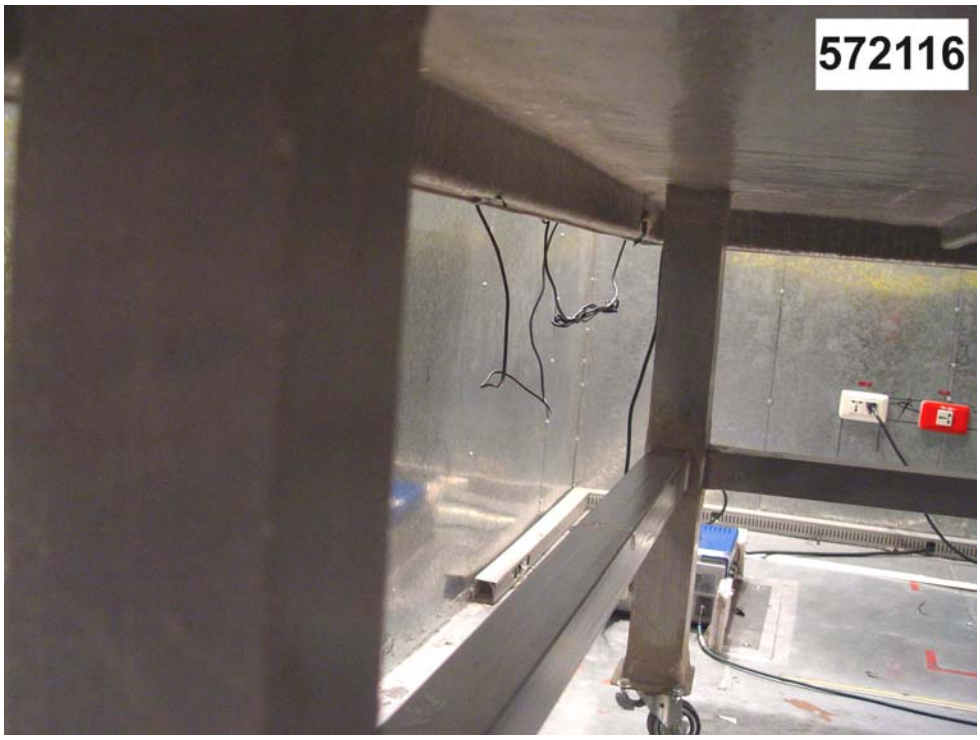

6. Test of Radiated Emission

Radiated emissions from 30 MHz to 1000 MHz were measured with a bandwidth of 120 kHz and 1MHz according to the methods defines in ANSI C63.4-2003. The EUT was placed on a nonmetallic stand, 0.8 meter above the ground plane, as shown in section 6.3. The interface cables and equipment positions were varied within limits of reasonable applications to determine the positions producing maximum radiated emissions.

6.1 Major Measuring Instruments

As described in Chapter 7.

6.2 Test Procedures

a. The EUT was placed on a rotatable table top 0.8 meter above ground.
b. The EUT was set 3 meters from the interference receiving antenna which was mounted on the top of a variable height antenna tower.
c. The table was rotated 360 degrees to determine the position of the highest radiation.
d. The antenna is a Bi-Log antenna and its height is varied between one meter and four meters above ground to find the maximum value of the field strength both for horizontal polarization and vertical polarization of the antenna.
e. For each suspected emission the EUT was arranged to its worst case and then tune the antenna tower (from 1 m to 4 m) and turntable (from 0 degree to 360 degrees) to find the maximum reading.
f. Set the test-receiver system to Peak Detect Function and specified bandwidth with Maximum Hold Mode.
g. If the emission level of the EUT in peak mode was 3 dB lower than the limit specified, then testing will be stopped and peak values of EUT will be reported, otherwise, the emissions will be repeated one by one using the quasi-peak method and reported.

6.3 Typical Test Setup Layout of Radiated Emission

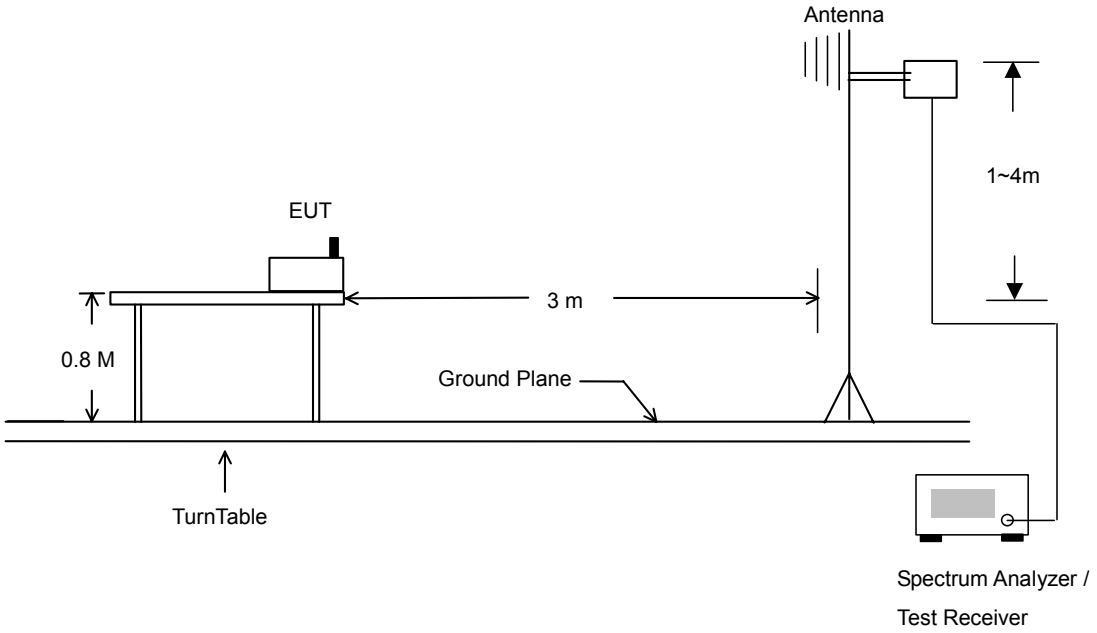

6.4 Test Result of Radiated Emission

6.4.1 Test Mode: Mode 1

- Frequency Range of Test: from 30 MHz to 25000 MHz
- Test Distance: 3m
- Temperature: 28°C
- Relative Humidity: 58%
- Emission level (dBuV/m) = 20 log Emission level (uV/m)
- Corrected Reading: Probe Factor + Cable Loss + Read Level - Preamp Factor = Level

The test that passed at the minimum margin was marked by a frame in the following data

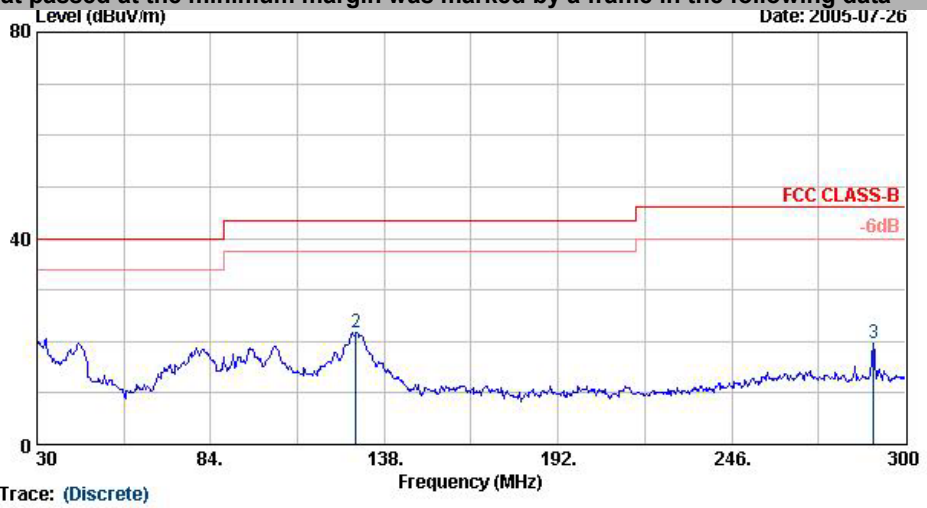

Site : 03CH06-HY
Condition : FCC CLASS-B 3m BI-LOG-2004-1122 HORIZONTAL
EUT : GSM Tri Band Mobile Phone
Power : 120Vac/60Hz (P925BW05050BB71)
Model : FD572116
Memo : PCS1900 Idle Mode+Camera+Earphone

	Freq	Level	Over Limit	Limit Line	Read Level	Antenna Factor	Preamp Factor	Cable Loss	Ant Pos	Table Pos	Remark
	MHz	dBuV/m	dB	dBuV/m	dBuV	dB/m	dB	dB	cm	deg	
1 @	30.00	20.55	-19.45	40.00	32.43	18.73	31.49	0.88	400	0	Peak
2 @	129.09	21.71	-21.79	43.50	40.05	11.71	31.60	1.55	400	0	Peak
3 @	290.01	19.73	-26.27	46.00	35.25	12.93	30.94	2.49	400	0	Peak

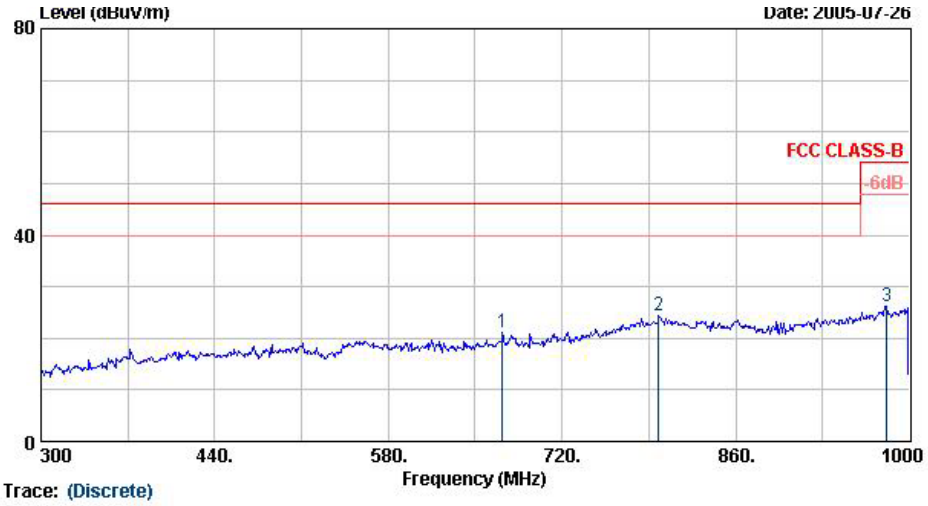

Site : 03CH06-HY
Condition : FCC CLASS-B 3m BI-LOG-2004-1122 HORIZONTAL
EUT : GSM Tri Band Mobile Phone
Power : 120Vac/60Hz (P92SBW05050BB71)
Model : FD572116
Memo : PCS1900 Idle Mode+Camera+Earphone

	Freq	Level	Over Limit	Limit Line	Read Level	Antenna Factor	Preamp Factor	Cable Loss	Ant Pos	Table Pos	Remark
	MHz	dBuV/m	dB	dBuV/m	dBuV	dB/m	dB	dB	cm	deg	
1 @	671.70	21.18	-24.82	46.00	28.64	18.73	30.54	4.35	100	0	Peak
2 @	797.70	24.45	-21.55	46.00	27.89	21.82	30.14	4.88	100	0	Peak
3 @	981.80	26.09	-27.91	54.00	27.83	22.41	30.23	6.08	100	0	Peak

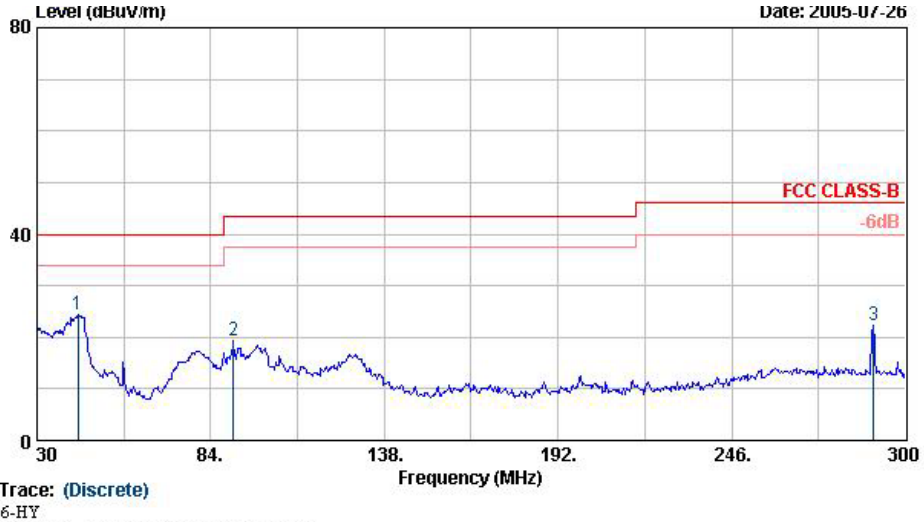

Site : 03CH06-HY
Condition : FCC CLASS-B 3m BI-LOG-2004-1122 VERTICAL
EUT : GSM Tri Band Mobile Phone
Power : 120Vac/60Hz (P92SBW05050BB71)
Model : FD572116
Memo : PCS1900 Idle Mode+Camera+Earphone

	Freq	Level	Over Limit	Limit Line	Read Level	Antenna Factor	Preamp Factor	Cable Loss	Ant Pos	Table Pos	Remark
	MHz	dBuV/m	dB	dBuV/m	dBuV	dB/m	dB	dB	cm	deg	
1 @	42.69	24.30	-15.70	40.00	42.21	13.19	31.67	0.57	400	0	Peak
2 @	91.02	19.20	-24.30	43.50	40.47	9.18	31.52	1.07	400	0	Peak
3 @	290.01	22.17	-23.83	46.00	37.69	12.93	30.94	2.49	400	0	Peak

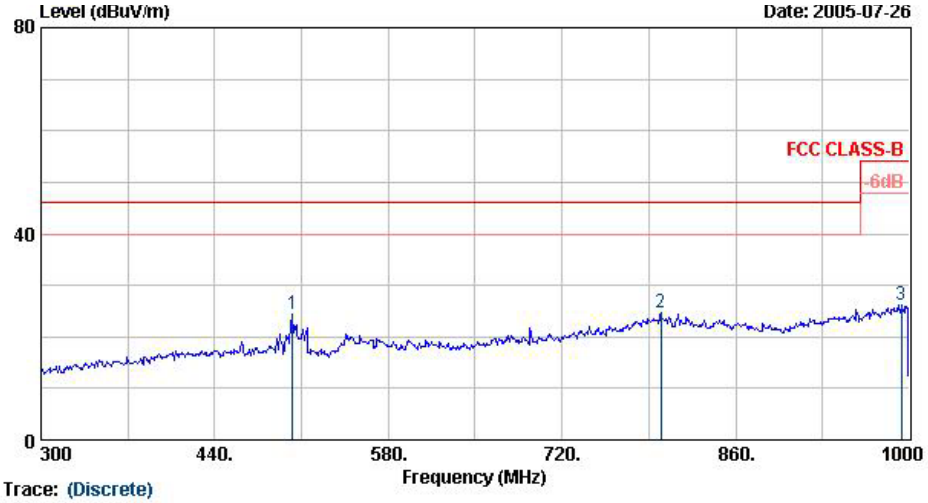

Site : 03CH06-HY
Condition : FCC CLASS-B 3m BI-LOG-2004-1122 VERTICAL
EUT : GSM Tri Band Mobile Phone
Power : 120Vac/60Hz (P925BW05050BB71)
Model : FD572116
Memo : PCS1900 Idle Mode+Camera+Earphone

	Freq	Level	Over Limit	Limit Line	Read Level	Antenna Factor	Preamp Factor	Cable Loss	Ant Pos	Table Pos	Remark
	MHz	dBuV/m	dB	dBuV/m	dBuV	dB/m	dB	dB	cm	deg	
1 @	503.00	24.33	-21.67	46.00	34.33	17.06	30.52	3.46	100	0	Peak
2 @	799.80	24.66	-21.34	46.00	27.99	21.90	30.12	4.90	100	0	Peak
3 @	993.70	26.27	-27.73	54.00	27.77	22.79	30.45	6.16	100	0	Peak

Test Engineer : _____
Jay

6.4.2 Test Mode: Mode 2

- Frequency Range of Test: from 30 MHz to 25000 MHz
- Test Distance: 3m
- Temperature: 28°C
- Relative Humidity: 58%
- Emission level (dBuV/m) = 20 log Emission level (uV/m)
- Corrected Reading: Probe Factor + Cable Loss + Read Level - Preamp Factor = Level

■ The test that passed at the minimum margin was marked by a frame in the following data

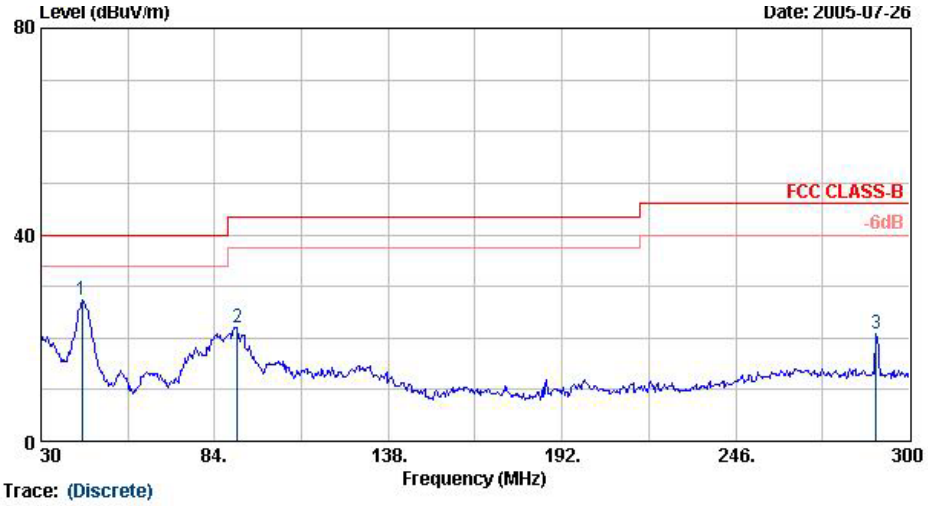

Site : 03CH06-HY
Condition : FCC CLASS-B 3m BI-LOG-2004-1122 HORIZONTAL
EUT : GSM Tri Band Mobile Phone
Power : 120Vac/60Hz (P925BW05050EB71)
Model : FD572116
Memo : PCS1900 Idle Mode+Camera+Earphone
: P925BW05050EB71

	Freq	Level	Over Limit	Limit Line	Read Level	Antenna Factor	Preamp Factor	Cable Loss	Ant Pos	Table Pos	Remark
	MHz	dBuV/m	dB	dBuV/m	dBuV	dB/m	dB	dB	cm	deg	
1 @	42.69	27.45	-12.55	40.00	45.36	13.19	31.67	0.57	400	0	Peak
2 @	91.02	22.13	-21.37	43.50	43.40	9.18	31.52	1.07	400	0	Peak
3 @	289.74	20.91	-25.09	46.00	36.43	12.93	30.94	2.49	400	0	Peak

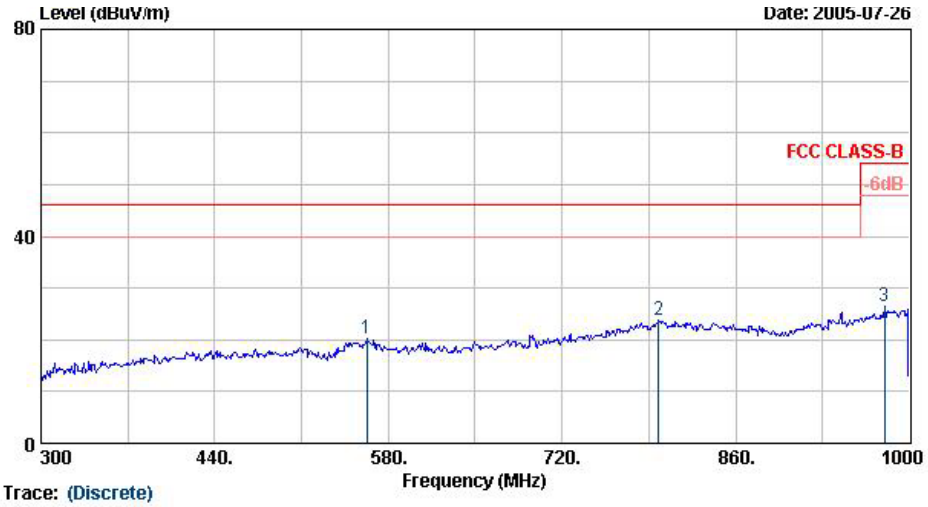

Site : 03CH06-HY
Condition : FCC CLASS-B 3m BI-LOG-2004-1122 HORIZONTAL
EUT : GSM Tri Band Mobile Phone
Power : 120Vac/60Hz (P925BW05050EB71)
Model : FD572116
Memo : PCS1900 Idle Mode+Camera+Earphone

	Freq	Level	Over Limit	Limit Line	Read Level	Antenna Factor	Preamp Factor	Cable Loss	Ant Pos	Table Pos	Remark
	MHz	dBuV/m	dB	dBuV/m	dBuV	dB/m	dB	dB	cm	deg	
1 @	562.50	20.22	-25.78	46.00	28.46	18.50	30.66	3.92	100	0	Peak
2 @	797.70	23.72	-22.28	46.00	27.16	21.82	30.14	4.88	100	0	Peak
3 @	979.70	26.57	-27.43	54.00	28.36	22.35	30.21	6.06	100	0	Peak

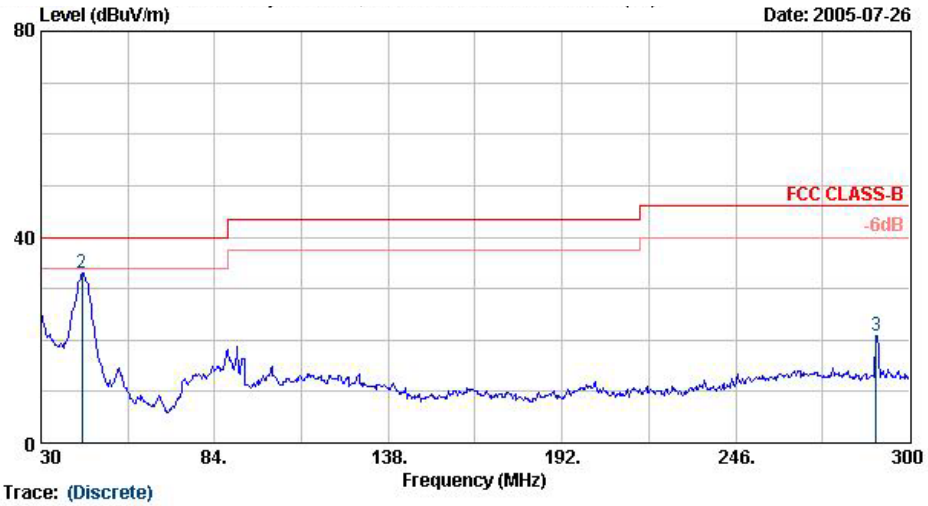

Site : 03CH06-HY
Condition : FCC CLASS-B 3m BI-LOG-2004-1122 VERTICAL
EUT : GSM Tri Band Mobile Phone
Power : 120Vac/60Hz (P925BW05050EB71)
Model : FD572116
Memo : PCS1900 Idle Mode+Camera+Earphone

	Freq	Level	Over Limit	Limit Line	Read Level	Antenna Factor	Preamp Factor	Cable Loss	Ant Pos	Table Pos	Remark
	MHz	dBuV/m	dB	dBuV/m	dBuV	dB/m	dB	dB	cm	deg	
1 @	30.00	25.25	-14.75	40.00	37.14	18.73	31.49	0.88	400	0	Peak
2 @	42.69	33.06	-6.94	40.00	50.97	13.19	31.67	0.57	400	0	Peak
3 @	289.74	20.93	-25.07	46.00	36.46	12.93	30.94	2.49	400	0	Peak