System Check_Head_750MHz

DUT: D750V3-1107

Communication System: CW; Frequency: 750 MHz;Duty Cycle: 1:1
Medium: HSL_750_200326 Medium parameters used: f = 750 MHz; σ = 0.895 S/m; ε_r = 43.476; ρ = 1000 kg/m^3
Ambient Temperature：23.6 ℃; Liquid Temperature：22.6 ℃

DASY5 Configuration:
- Probe: EX3DV4 - SN3728;ConvF(9.67, 9.67, 9.67) @ 750 MHz;Calibrated: 2020/2/4
- Sensor-Surface: 1.4mm (Mechanical Surface Detection)
- Electronics: DAE3 Sn495; Calibrated: 2019/5/21
- Phantom: ELI v5.0; Type: QDOVA002AA; Serial: TP:1238
- Measurement SW: DASY52, Version 52.10 (4);SEMCAD X Version 14.6.14 (7483)

Pin=250mW/Area Scan (61x61x1): Interpolated grid: dx=1.500 mm, dy=1.500 mm
Maximum value of SAR (interpolated) = 2.86 W/kg

Pin=250mW/Zoom Scan (5x5x7)/Cube 0: Measurement grid: dx=8mm, dy=8mm, dz=5mm
Reference Value = 60.83 V/m; Power Drift = -0.12 dB
Peak SAR (extrapolated) = 3.54 W/kg
SAR(1 g) = 2.11 W/kg; SAR(10 g) = 1.35 W/kg
Maximum value of SAR (measured) = 3.01 W/kg

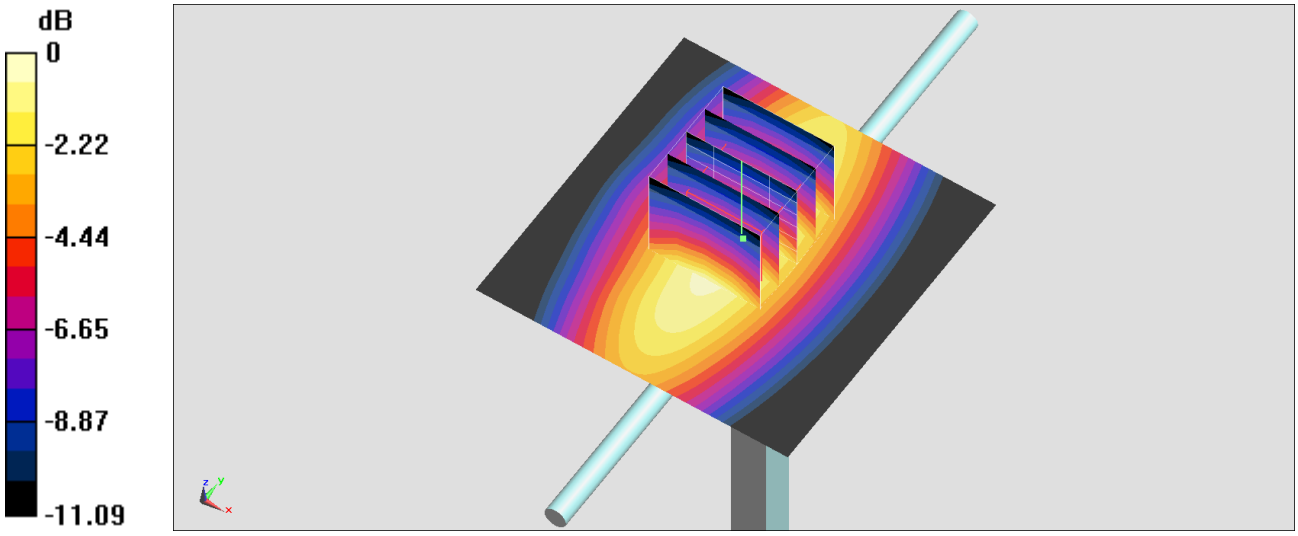

0 dB = 3.01 W/kg = 4.79 dBW/kg

System Check_Head_750MHz

DUT: D750V3-1107

Communication System: CW ; Frequency: 750 MHz;Duty Cycle: 1:1
Medium: HSL_750_200326 Medium parameters used: f = 750 MHz; σ = 0.895 S/m; ε_r = 43.476; ρ = 1000 kg/m^3
Ambient Temperature：23.6 ℃; Liquid Temperature：22.6 ℃

DASY5 Configuration:
- Probe: EX3DV4 - SN3931;ConvF(9.99, 9.99, 9.99) @ 750 MHz;Calibrated: 2019/9/26
- Sensor-Surface: 1.4mm (Mechanical Surface Detection)
- Electronics: DAE3 Sn495; Calibrated: 2019/5/21
- Phantom: ELI v5.0; Type: QDOVA002AA; Serial: TP:1238
- Measurement SW: DASY52, Version 52.10 (4);SEMCAD X Version 14.6.14 (7483)

Pin=250mW/Area Scan (61x61x1): Interpolated grid: dx=1.500 mm, dy=1.500 mm
Maximum value of SAR (interpolated) = 2.92 W/kg

Pin=250mW/Zoom Scan (5x5x7)/Cube 0: Measurement grid: dx=8mm, dy=8mm, dz=5mm
Reference Value = 61.01 V/m; Power Drift = -0.13 dB
Peak SAR (extrapolated) = 3.29 W/kg
SAR(1 g) = 2.27 W/kg; SAR(10 g) = 1.53 W/kg
Maximum value of SAR (measured) = 2.97 W/kg

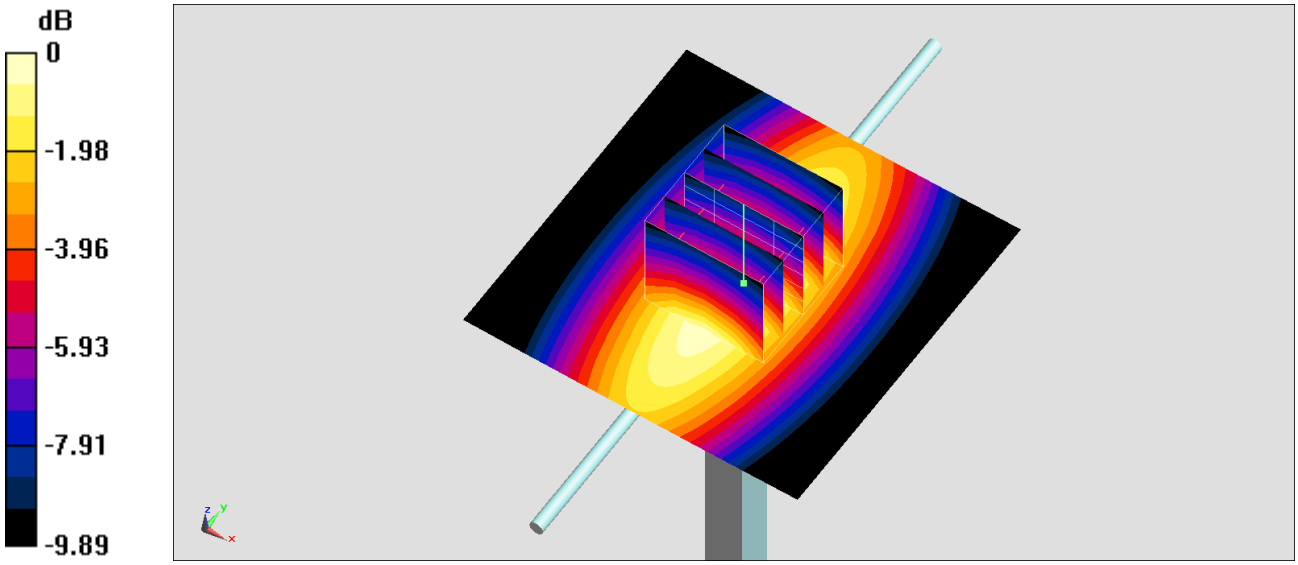

0 dB = 2.97 W/kg = 4.73 dBW/kg

System Check_Head_750MHz

DUT: D750V3-1107

Communication System: CW ; Frequency: 750 MHz;Duty Cycle: 1:1
Medium: HSL_750_200402 Medium parameters used: f = 750 MHz; σ = 0.899 S/m; ε_r = 43.706; ρ = 1000 kg/m^3
Ambient Temperature：23.2 ℃; Liquid Temperature：22.2 ℃

DASY5 Configuration:
- Probe: EX3DV4 - SN3925; ConvF(10.33, 10.33, 10.33) @ 750 MHz; Calibrated: 2019/9/20
- Sensor-Surface: 1.4mm (Mechanical Surface Detection)
- Electronics: DAE4 Sn778; Calibrated: 2019/5/21
- Phantom: ELI v5.0; Type: QDOVA002AA; Serial: 1131
- Measurement SW: DASY52, Version 52.10 (4);SEMCAD X Version 14.6.14 (7483)

Pin=250mW/Area Scan (61x61x1): Interpolated grid: dx=1.500 mm, dy=1.500 mm
Maximum value of SAR (interpolated) = 2.79 W/kg

Pin=250mW/Zoom Scan (5x5x7)/Cube 0: Measurement grid: dx=8mm, dy=8mm, dz=5mm
Reference Value = 58.48 V/m; Power Drift = -0.13 dB
Peak SAR (extrapolated) = 3.21 W/kg
SAR(1 g) = 2.13 W/kg; SAR(10 g) = 1.42 W/kg
Maximum value of SAR (measured) = 2.83 W/kg

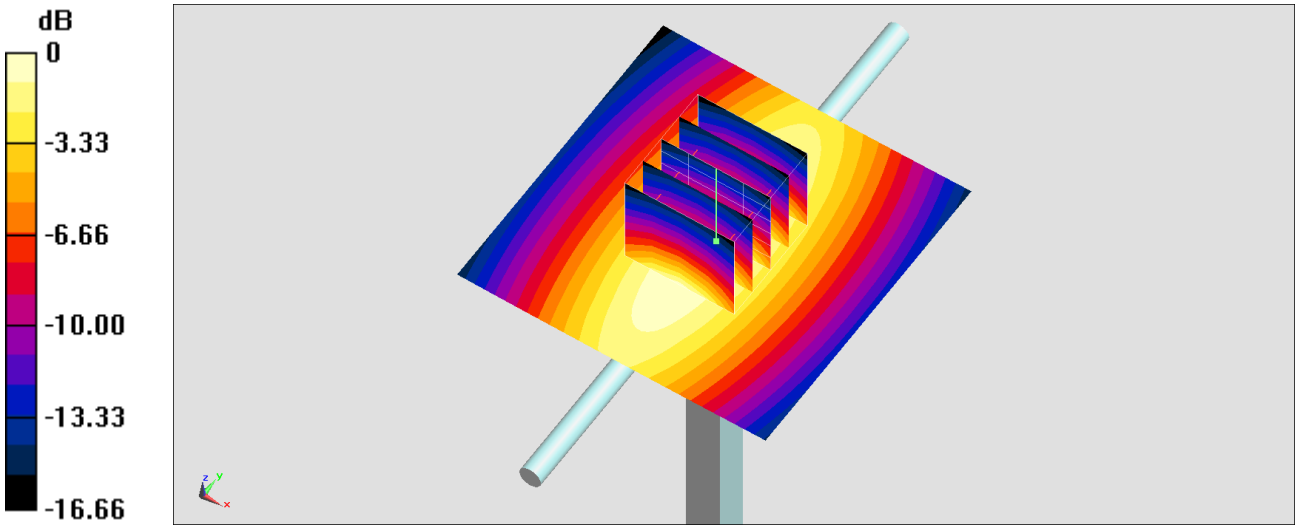

0 dB = 2.79 W/kg = 4.46 dBW/kg

System Check_Head_750MHz

DUT: D750V3-1107

Communication System:CW ; Frequency: 750 MHz;Duty Cycle: 1:1
Medium: HSL_750_200402 Medium parameters used: f = 750 MHz; σ = 0.900 S/m; ε_r = 41.95; ρ = 1000 kg/m^3
Ambient Temperature：23.6 ℃; Liquid Temperature：22.6 ℃

DASY5 Configuration:
- Probe: EX3DV4 - SN3728;ConvF(9.67, 9.67, 9.67) @ 750 MHz;Calibrated: 2020/2/4
- Sensor-Surface: 1.4mm (Mechanical Surface Detection)
- Electronics: DAE4 Sn854; Calibrated: 2019/5/21
- Phantom: ELI v5.0; Type: QDOVA002AA; Serial: TP:1238
- Measurement SW: DASY52, Version 52.10 (4);SEMCAD X Version 14.6.14 (7483)

Pin=250mW/Area Scan (61x61x1): Interpolated grid: dx=1.500 mm, dy=1.500 mm
Maximum value of SAR (interpolated) = 2.87 W/kg

Pin=250mW/Zoom Scan (5x5x7)/Cube 0: Measurement grid: dx=8mm, dy=8mm, dz=5mm
Reference Value = 60.81 V/m; Power Drift = -0.09 dB
Peak SAR (extrapolated) = 3.55 W/kg
SAR(1 g) = 2.12 W/kg; SAR(10 g) = 1.36 W/kg
Maximum value of SAR (measured) = 3.01 W/kg

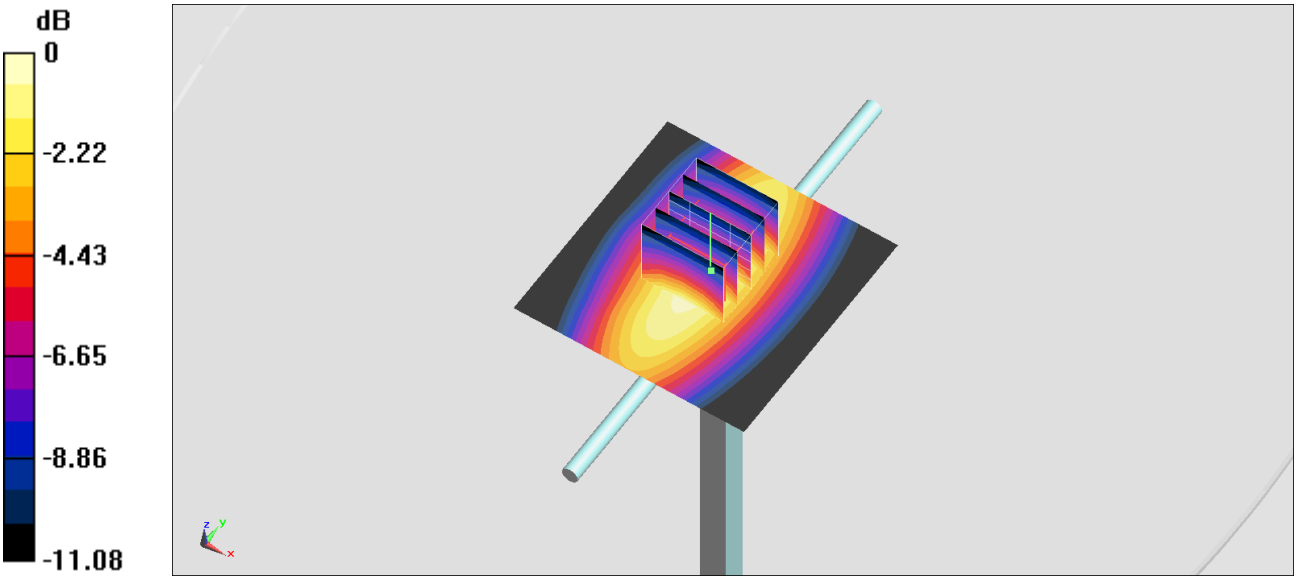

0 dB = 3.01 W/kg = 4.79 dBW/kg

System Check_Head_835MHz

DUT: D835V2-4d167

Communication System: CW ; Frequency: 835 MHz;Duty Cycle: 1:1
Medium: HSL_850_200326 Medium parameters used: f = 835 MHz; σ = 0.908 S/m; ε_r = 43.289; ρ = 1000 kg/m^3
Ambient Temperature：23.3 ℃; Liquid Temperature：22.3 ℃

DASY5 Configuration:
- Probe: EX3DV4 - SN3728;ConvF(9.51, 9.51, 9.51) @ 835 MHz;Calibrated: 2020/2/4
- Sensor-Surface: 1.4mm (Mechanical Surface Detection)
- Electronics: DAE3 Sn495; Calibrated: 2019/5/21
- Phantom: ELI v5.0; Type: QDOVA002AA; Serial: TP:1238
- Measurement SW: DASY52, Version 52.10 (4);SEMCAD X Version 14.6.14 (7483)

Pin=250mW/Area Scan (61x61x1): Interpolated grid: dx=1.500 mm, dy=1.500 mm
Maximum value of SAR (interpolated) = 3.24 W/kg

Pin=250mW/Zoom Scan (5x5x7)/Cube 0: Measurement grid: dx=8mm, dy=8mm, dz=5mm
Reference Value = 62.65 V/m; Power Drift = -0.03 dB
Peak SAR (extrapolated) = 4.16 W/kg
SAR(1 g) = 2.39 W/kg; SAR(10 g) = 1.51 W/kg
Maximum value of SAR (measured) = 3.48 W/kg

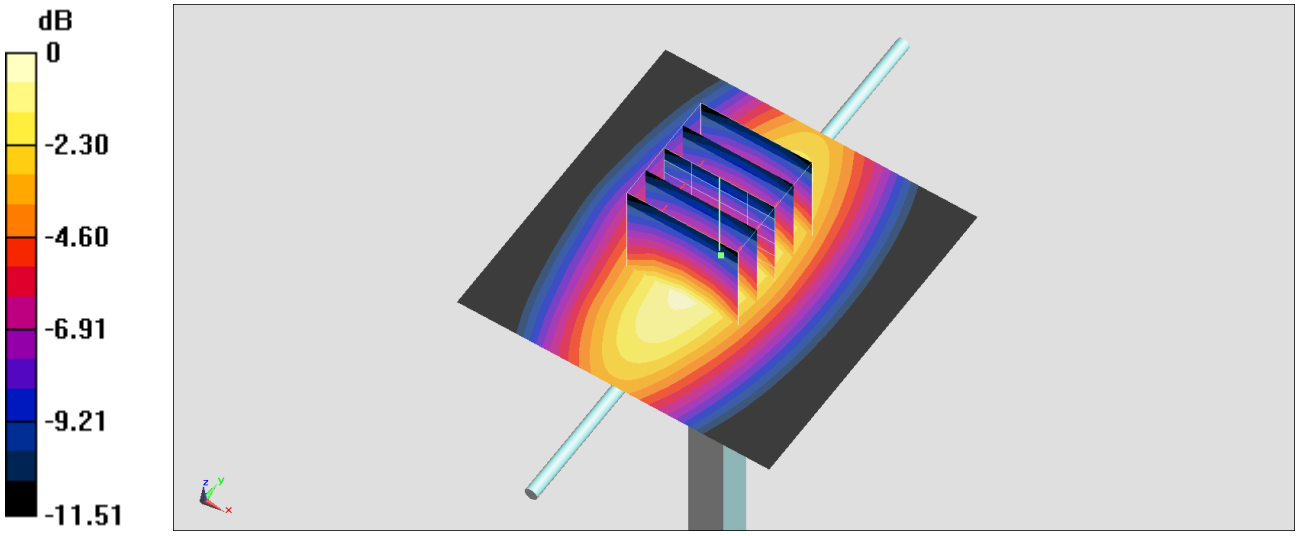

0 dB = 3.48 W/kg = 5.42 dBW/kg

System Check_Head_1750MHz

DUT: D1750V2-1112

Communication System: CW; Frequency: 1750 MHz;Duty Cycle: 1:1
Medium: HSL_1750_200325 Medium parameters used: f = 1750 MHz; σ = 1.358 S/m; ε_r = 41.604; ρ = 1000 kg/m^3
Ambient Temperature：23.6 ℃; Liquid Temperature：22.6 ℃

DASY5 Configuration:
- Probe: EX3DV4 - SN3728;ConvF(8.06, 8.06, 8.06) @ 1750 MHz;Calibrated: 2020/2/4
- Sensor-Surface: 1.4mm (Mechanical Surface Detection)
- Electronics: DAE3 Sn495; Calibrated: 2019/5/21
- Phantom: ELI v5.0; Type: QDOVA002AA; Serial: TP:1238
- Measurement SW: DASY52, Version 52.10 (4);SEMCAD X Version 14.6.14 (7483)

Pin=250mW/Area Scan (61x61x1): Interpolated grid: dx=1.500 mm, dy=1.500 mm
Maximum value of SAR (interpolated) = 13.5 W/kg

Pin=250mW/Zoom Scan (5x5x7)/Cube 0: Measurement grid: dx=8mm, dy=8mm, dz=5mm
Reference Value = 100.9 V/m; Power Drift = 0.07 dB
Peak SAR (extrapolated) = 16.1 W/kg
SAR(1 g) = 8.56 W/kg; SAR(10 g) = 4.54 W/kg
Maximum value of SAR (measured) = 13.3 W/kg

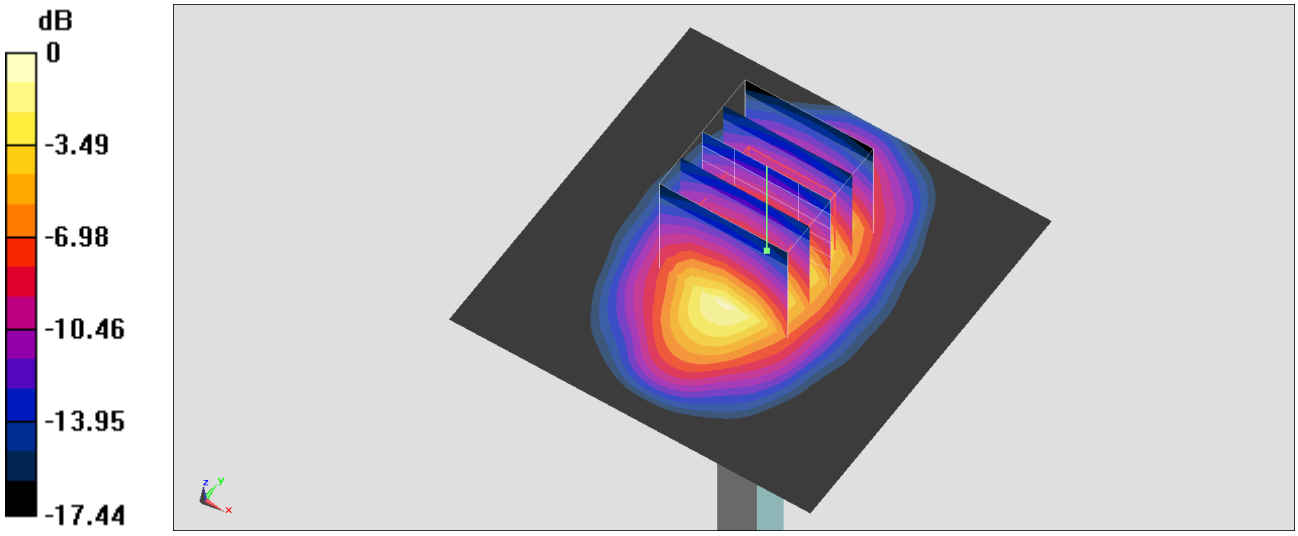

0 dB = 13.3 W/kg = 11.24 dBW/kg

System Check_Head_1750MHz

DUT: D1750V2-1112

Communication System: CW; Frequency: 1750 MHz;Duty Cycle: 1:1
Medium: HSL_1750_200325 Medium parameters used: f = 1750 MHz; σ = 1.358 S/m; ε_r = 41.604; ρ = 1000 kg/m^3
Ambient Temperature：23.6 ℃; Liquid Temperature：22.6 ℃

DASY5 Configuration:
- Probe: EX3DV4 - SN3931;ConvF(8.66, 8.66, 8.66) @ 1750 MHz;Calibrated: 2019/9/26
- Sensor-Surface: 1.4mm (Mechanical Surface Detection)
- Electronics: DAE3 Sn495; Calibrated: 2019/5/21
- Phantom: ELI v5.0; Type: QDOVA002AA; Serial: TP:1238
- Measurement SW: DASY52, Version 52.10 (4);SEMCAD X Version 14.6.14 (7483)

Pin=250mW/Area Scan (61x61x1): Interpolated grid: dx=1.500 mm, dy=1.500 mm
Maximum value of SAR (interpolated) = 14.7 W/kg

Pin=250mW/Zoom Scan (5x5x7)/Cube 0: Measurement grid: dx=8mm, dy=8mm, dz=5mm
Reference Value = 104.7 V/m; Power Drift = 0.12 dB
Peak SAR (extrapolated) = 17.1 W/kg
SAR(1 g) = 9.47 W/kg; SAR(10 g) = 5.04 W/kg
Maximum value of SAR (measured) = 14.4 W/kg

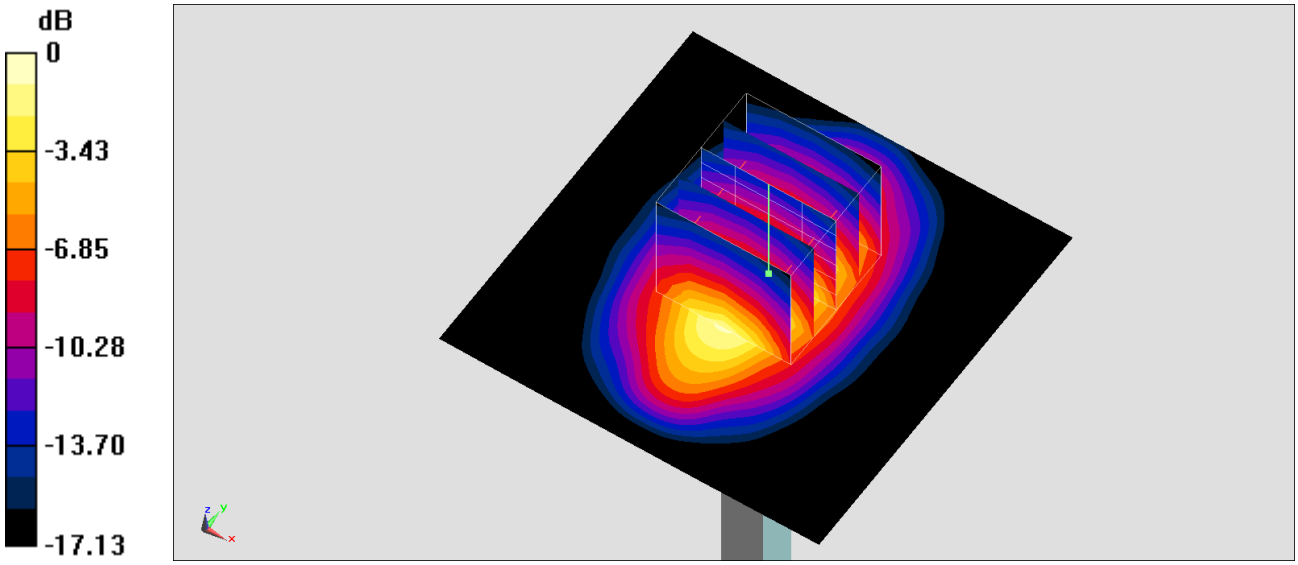

0 dB = 14.4 W/kg = 11.58 dBW/kg

System Check_Head_1750MHz

DUT: D1750V2-1112

Communication System: CW; Frequency: 1750 MHz;Duty Cycle: 1:1
Medium: HSL_1750_200402 Medium parameters used: f = 1750 MHz; σ = 1.369 S/m; ε_r = 40.6; ρ = 1000 kg/m^3
Ambient Temperature：23.2 ℃; Liquid Temperature：22.2 ℃

DASY5 Configuration:
- Probe: EX3DV4 - SN3925; ConvF(8.7, 8.7, 8.7) @ 1750 MHz; Calibrated: 2019/9/20
- Sensor-Surface: 1.4mm (Mechanical Surface Detection)
- Electronics: DAE4 Sn778; Calibrated: 2019/5/21
- Phantom: ELI v5.0; Type: QDOVA002AA; Serial: 1131
- Measurement SW: DASY52, Version 52.10 (4);SEMCAD X Version 14.6.14 (7483)

Pin=250mW/Area Scan (61x61x1): Interpolated grid: dx=1.500 mm, dy=1.500 mm
Maximum value of SAR (interpolated) = 14.5 W/kg

Pin=250mW/Zoom Scan (5x5x7)/Cube 0: Measurement grid: dx=8mm, dy=8mm, dz=5mm
Reference Value = 103.5 V/m; Power Drift = 0.09 dB
Peak SAR (extrapolated) = 17.0 W/kg
SAR(1 g) = 9.28 W/kg; SAR(10 g) = 4.95 W/kg
Maximum value of SAR (measured) = 14.3 W/kg

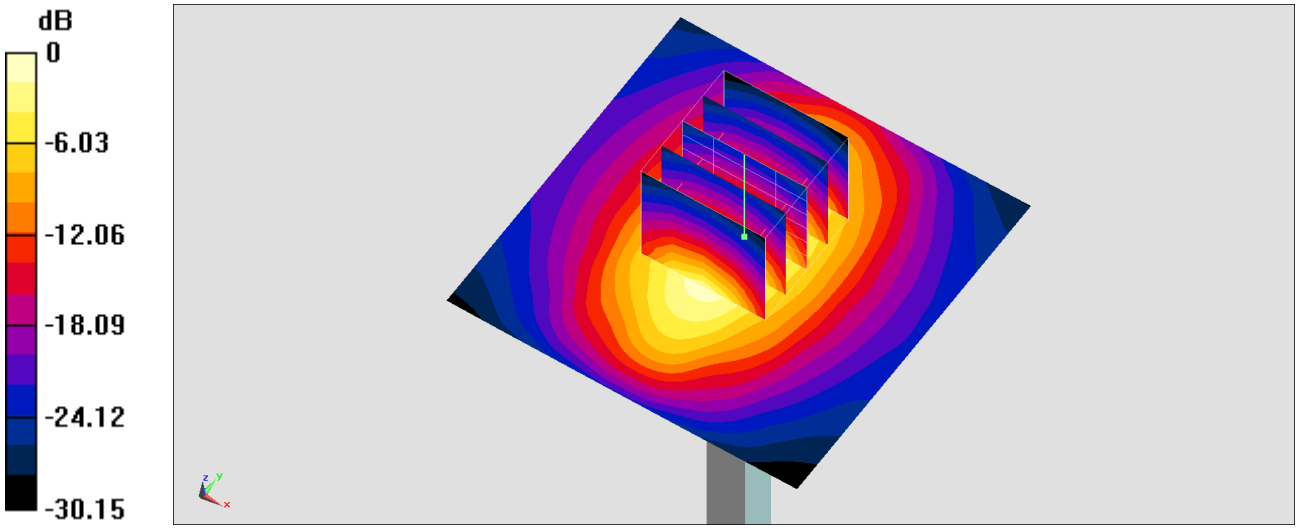

0 dB = 14.5 W/kg = 11.61 dBW/kg

System Check_Head_1750MHz

DUT: D1750V2-1112

Communication System: CW; Frequency: 1750 MHz;Duty Cycle: 1:1
Medium: HSL1750_200402 Medium parameters used: f = 1750 MHz; σ = 1.365 S/m; ε_r = 40.523; ρ = 1000 kg/m^3
Ambient Temperature：23.6 ℃; Liquid Temperature：22.6 ℃

DASY5 Configuration:
- Probe: EX3DV4 - SN3728;ConvF(8.06, 8.06, 8.06) @ 1750 MHz;Calibrated: 2020/2/4
- Sensor-Surface: 1.4mm (Mechanical Surface Detection)
- Electronics: DAE4 Sn854; Calibrated: 2019/5/21
- Phantom: ELI v5.0; Type: QDOVA002AA; Serial: TP:1238
- Measurement SW: DASY52, Version 52.10 (4);SEMCAD X Version 14.6.14 (7483)

Pin=250mW/Area Scan (61x61x1): Interpolated grid: dx=1.500 mm, dy=1.500 mm
Maximum value of SAR (interpolated) = 13.5 W/kg

Pin=250mW/Zoom Scan (5x5x7)/Cube 0: Measurement grid: dx=8mm, dy=8mm, dz=5mm
Reference Value = 100.9 V/m; Power Drift = 0.04 dB
Peak SAR (extrapolated) = 16.2 W/kg
SAR(1 g) = 8.6 W/kg; SAR(10 g) = 4.56 W/kg
Maximum value of SAR (measured) = 13.4 W/kg

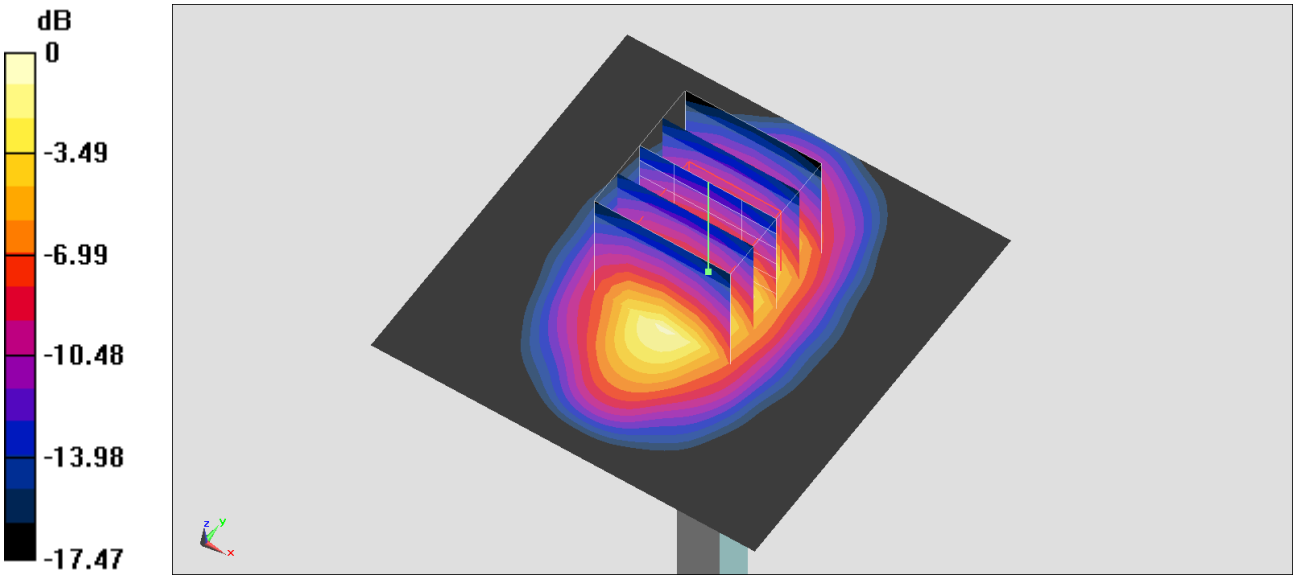

0 dB = 13.4 W/kg = 11.27 dBW/kg

System Check_Head_1900MHz

DUT: D1900V2-5d041

Communication System: CW ; Frequency: 1900 MHz;Duty Cycle: 1:1
Medium: HSL_1900_200325 Medium parameters used: f = 1900 MHz; σ = 1.429 S/m; ε_r = 38.473; ρ = 1000 kg/m^3
Ambient Temperature：23.6 ℃; Liquid Temperature：22.6 ℃

DASY5 Configuration:
- Probe: EX3DV4 - SN3728;ConvF(7.82, 7.82, 7.82) @ 1900 MHz;Calibrated: 2020/2/4
- Sensor-Surface: 1.4mm (Mechanical Surface Detection)
- Electronics: DAE3 Sn495; Calibrated: 2019/5/21
- Phantom: ELI v5.0; Type: QDOVA002AA; Serial: TP:1238
- Measurement SW: DASY52, Version 52.10 (4);SEMCAD X Version 14.6.14 (7483)

Pin=250mW/Area Scan (61x61x1): Interpolated grid: dx=1.500 mm, dy=1.500 mm
Maximum value of SAR (interpolated) = 16.4 W/kg

Pin=250mW/Zoom Scan (5x5x7)/Cube 0: Measurement grid: dx=8mm, dy=8mm, dz=5mm
Reference Value = 106.3 V/m; Power Drift = -0.04 dB
Peak SAR (extrapolated) = 18.4 W/kg
SAR(1 g) = 10.1 W/kg; SAR(10 g) = 5.22 W/kg
Maximum value of SAR (measured) = 15.6 W/kg

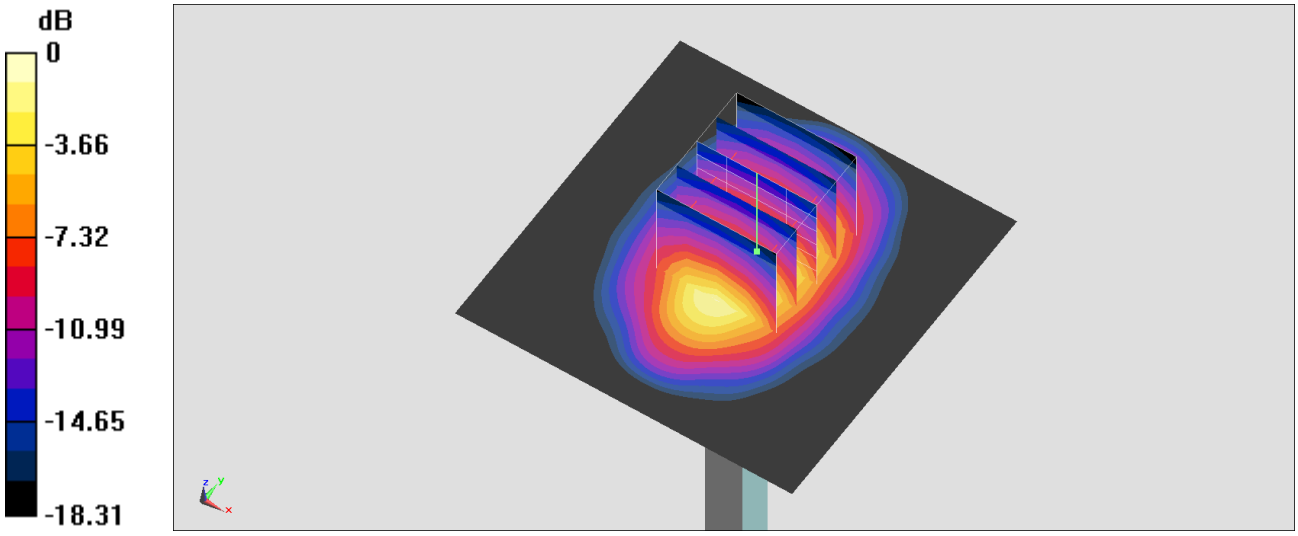

0 dB = 15.6 W/kg = 11.93 dBW/kg

System Check_Head_1900MHz

DUT: D1900V2-5d041

Communication System: CW; Frequency: 1900 MHz;Duty Cycle: 1:1
Medium: HSL_1900_200325 Medium parameters used: f = 1900 MHz; σ = 1.429 S/m; ε_r = 38.473; ρ = 1000 kg/m^3
Ambient Temperature：23.6 ℃; Liquid Temperature：22.6 ℃

DASY5 Configuration:
- Probe: EX3DV4 - SN3931;ConvF(8.32, 8.32, 8.32) @ 1900 MHz;Calibrated: 2019/9/26
- Sensor-Surface: 1.4mm (Mechanical Surface Detection)
- Electronics: DAE3 Sn495; Calibrated: 2019/5/21
- Phantom: ELI v5.0; Type: QDOVA002AA; Serial: TP:1238
- Measurement SW: DASY52, Version 52.10 (4);SEMCAD X Version 14.6.14 (7483)

Pin=250mW/Area Scan (61x61x1): Interpolated grid: dx=1.500 mm, dy=1.500 mm
Maximum value of SAR (interpolated) = 16.5 W/kg

Pin=250mW/Zoom Scan (5x5x7)/Cube 0: Measurement grid: dx=8mm, dy=8mm, dz=5mm
Reference Value = 110.2 V/m; Power Drift = -0.03 dB
Peak SAR (extrapolated) = 19.1 W/kg
SAR(1 g) = 10.5 W/kg; SAR(10 g) = 5.47 W/kg
Maximum value of SAR (measured) = 16.1 W/kg

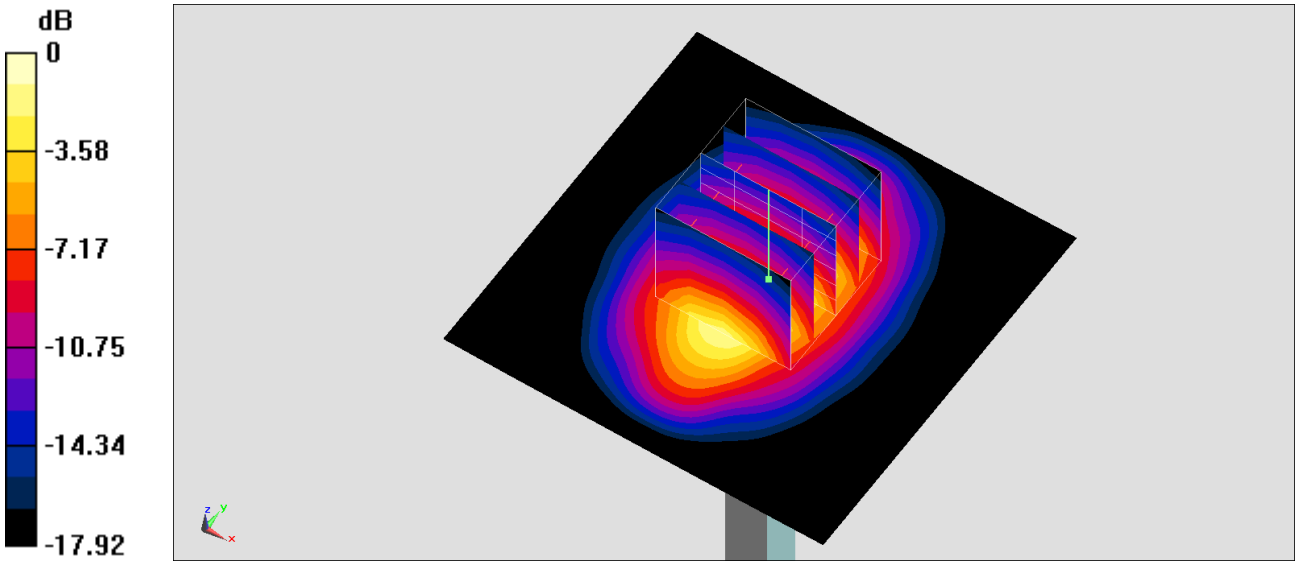

0 dB = 16.1 W/kg = 12.07 dBW/kg

System Check_Head_1900MHz

DUT: D1900V2-5d041

Communication System: CW; Frequency: 1900 MHz;Duty Cycle: 1:1
Medium: HSL_1900_200402 Medium parameters used: f = 1900 MHz; σ = 1.415 S/m; ε_r = 39.184; ρ = 1000 kg/m^3
Ambient Temperature：23.2 ℃; Liquid Temperature：22.2 ℃

DASY5 Configuration:
- Probe: EX3DV4 - SN3925; ConvF(8.35, 8.35, 8.35) @ 1900 MHz; Calibrated: 2019/9/20
- Sensor-Surface: 1.4mm (Mechanical Surface Detection)
- Electronics: DAE4 Sn778; Calibrated: 2019/5/21
- Phantom: ELI v5.0; Type: QDOVA002AA; Serial: 1131
- Measurement SW: DASY52, Version 52.10 (4);SEMCAD X Version 14.6.14 (7483)

Pin=250mW/Area Scan (61x61x1): Interpolated grid: dx=1.500 mm, dy=1.500 mm
Maximum value of SAR (interpolated) = 14.9 W/kg

Pin=250mW/Zoom Scan (5x5x7)/Cube 0: Measurement grid: dx=8mm, dy=8mm, dz=5mm
Reference Value = 103.8 V/m; Power Drift = 0.08 dB
Peak SAR (extrapolated) = 17.5 W/kg
SAR(1 g) = 9.48 W/kg; SAR(10 g) = 4.91 W/kg
Maximum value of SAR (measured) = 14.8 W/kg

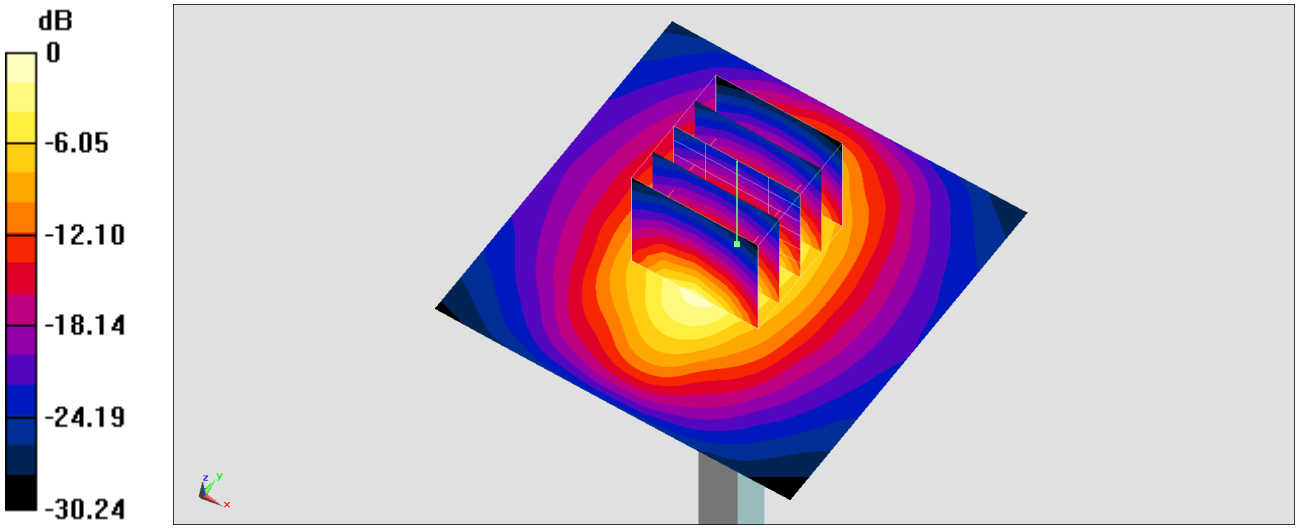

0 dB = 14.9 W/kg = 11.73 dBW/kg

System Check_Head_1900MHz

DUT: D1900V2-5d041

Communication System: CW ; Frequency: 1900 MHz;Duty Cycle: 1:1
Medium: HSL_1900_200402 Medium parameters used: f = 1900 MHz; σ = 1.38 S/m; ε_r = 40.27; ρ = 1000 kg/m^3
Ambient Temperature：23.6 ℃; Liquid Temperature：22.6 ℃

DASY5 Configuration:
- Probe: EX3DV4 - SN3728;ConvF(7.82, 7.82, 7.82) @ 1900 MHz;Calibrated: 2020/2/4
- Sensor-Surface: 1.4mm (Mechanical Surface Detection)
- Electronics: DAE4 Sn854; Calibrated: 2019/5/21
- Phantom: ELI v5.0; Type: QDOVA002AA; Serial: TP:1238
- Measurement SW: DASY52, Version 52.10 (4);SEMCAD X Version 14.6.14 (7483)

Pin=250mW/Area Scan (61x61x1): Interpolated grid: dx=1.500 mm, dy=1.500 mm
Maximum value of SAR (interpolated) = 15.8 W/kg

Pin=250mW/Zoom Scan (5x5x7)/Cube 0: Measurement grid: dx=8mm, dy=8mm, dz=5mm
Reference Value = 106.3 V/m; Power Drift = -0.12 dB
Peak SAR (extrapolated) = 17.8 W/kg
SAR(1 g) = 9.72 W/kg; SAR(10 g) = 5.04 W/kg
Maximum value of SAR (measured) = 15.0 W/kg

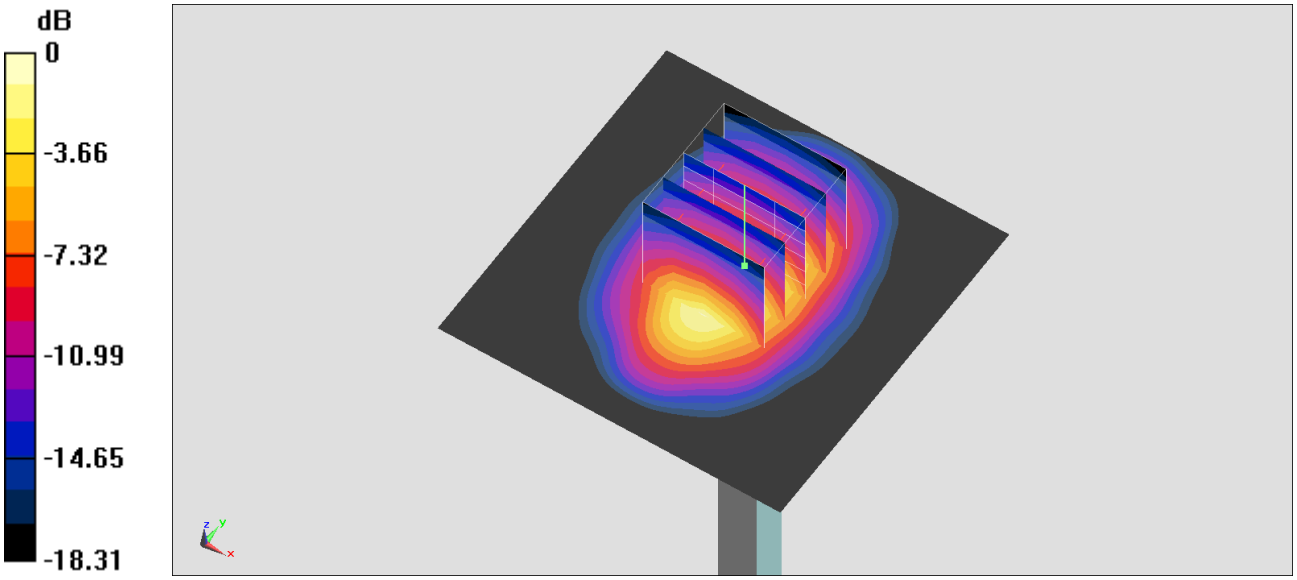

0 dB = 15.0 W/kg = 11.76 dBW/kg

System Check_Head_1900MHz

DUT: D1900V2-5d041

Communication System: CW ; Frequency: 1900 MHz;Duty Cycle: 1:1
Medium: HSL_1900_200406 Medium parameters used: f = 1900 MHz; σ = 1.439 S/m; ε_r = 40.16; ρ = 1000 kg/m^3
Ambient Temperature：23.6 ℃; Liquid Temperature：22.6 ℃

DASY5 Configuration:
- Probe: EX3DV4 - SN3728;ConvF(7.82, 7.82, 7.82) @ 1900 MHz;Calibrated: 2020/2/4
- Sensor-Surface: 1.4mm (Mechanical Surface Detection)
- Electronics: DAE4 Sn854; Calibrated: 2019/5/21
- Phantom: ELI v5.0; Type: QDOVA002AA; Serial: TP:1238
- Measurement SW: DASY52, Version 52.10 (4);SEMCAD X Version 14.6.14 (7483)

Pin=250mW/Area Scan (61x61x1): Interpolated grid: dx=1.500 mm, dy=1.500 mm
Maximum value of SAR (interpolated) = 16.9 W/kg

Pin=250mW/Zoom Scan (5x5x7)/Cube 0: Measurement grid: dx=8mm, dy=8mm, dz=5mm
Reference Value = 111.8 V/m; Power Drift = -0.05 dB
Peak SAR (extrapolated) = 18.7 W/kg
SAR(1 g) = 9.96 W/kg; SAR(10 g) = 5.09 W/kg
Maximum value of SAR (measured) = 15.7 W/kg

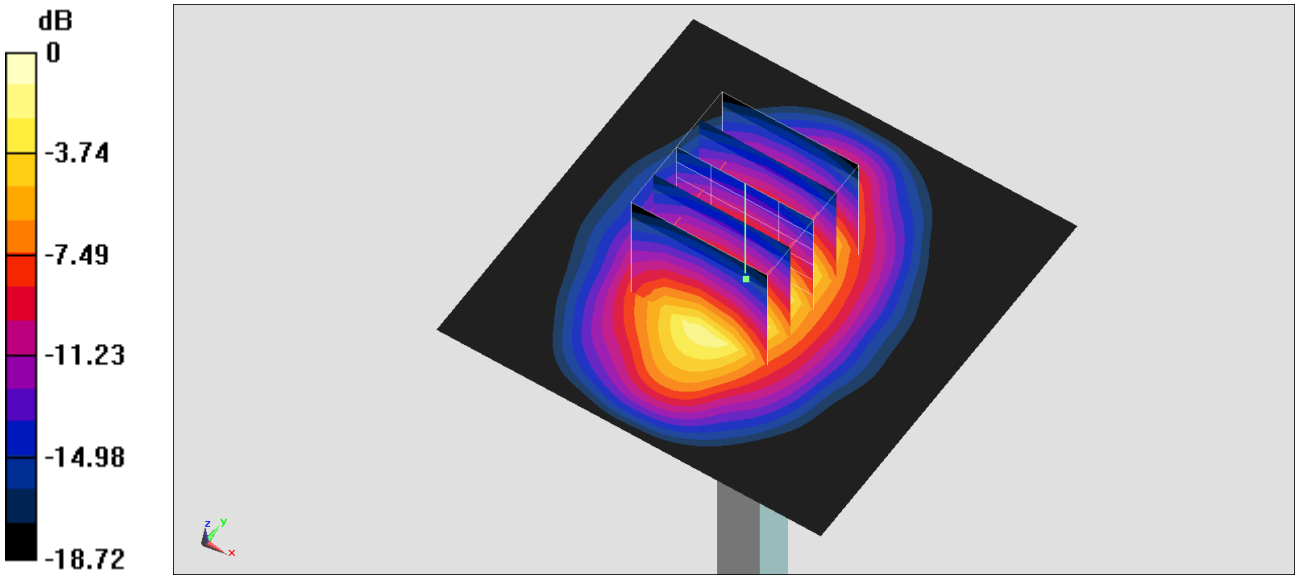

0 dB = 15.7 W/kg = 11.96 dBW/kg

System Check_Head_2450MHz

DUT: D2450V2-736

Communication System: CW; Frequency: 2450 MHz;Duty Cycle: 1:1
Medium: HSL_2450_200328 Medium parameters used : f = 2450 MHz; σ = 1.784 S/m; ε_r = 40.649; ρ = 1000 kg/m^3
Ambient Temperature：23.5 ℃; Liquid Temperature：22.5 ℃

DASY5 Configuration:
- Probe: EX3DV4 - SN3931;ConvF(7.61, 7.61, 7.61) @ 2450 MHz;Calibrated: 2019/9/26
- Sensor-Surface: 1.4mm (Mechanical Surface Detection)
- Electronics: DAE3 Sn495; Calibrated: 2019/5/21
- Phantom: ELI v5.0; Type: QDOVA002AA; Serial: TP:1238
- Measurement SW: DASY52, Version 52.10 (4);SEMCAD X Version 14.6.14 (7483)

Pin=250mW/Area Scan (71x71x1): Interpolated grid: dx=1.200 mm, dy=1.200 mm
Maximum value of SAR (interpolated) = 23.9 W/kg

Pin=250mW/Zoom Scan (7x7x7)/Cube 0: Measurement grid: dx=5mm, dy=5mm, dz=5mm
Reference Value = 119.5 V/m; Power Drift = -0.15 dB
Peak SAR (extrapolated) = 29.1 W/kg
SAR(1 g) = 13.8 W/kg; SAR(10 g) = 6.33 W/kg
Maximum value of SAR (measured) = 23.5 W/kg

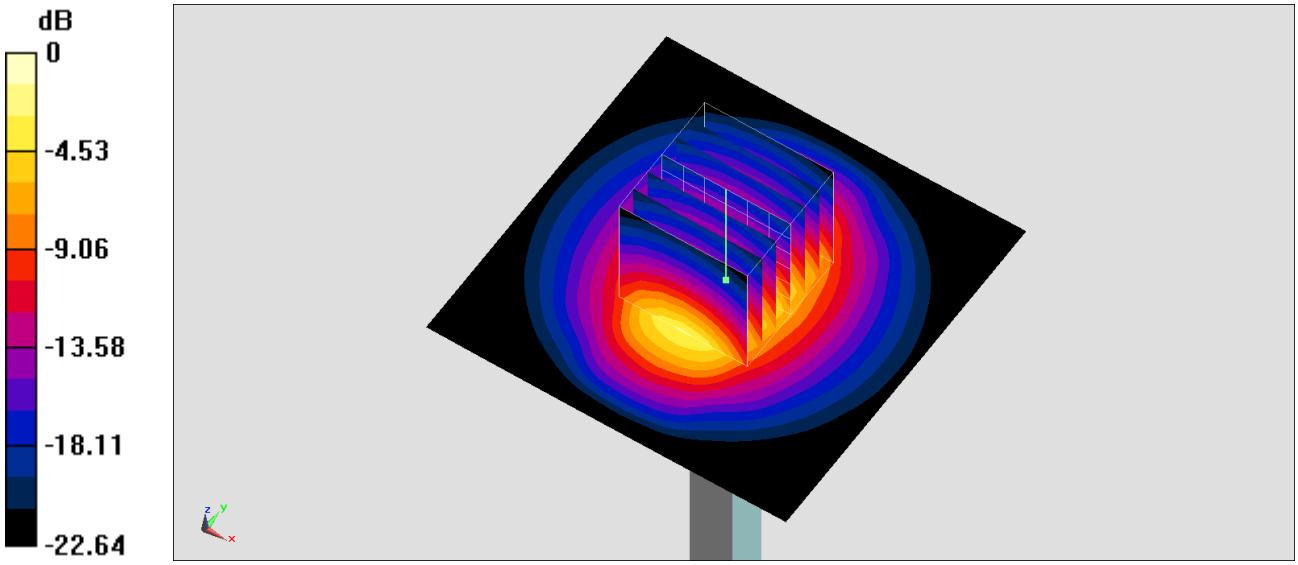

0 dB = 23.5 W/kg = 13.71 dBW/kg

System Check_Head_2450MHz

DUT: D2450V2-736

Communication System: CW ; Frequency: 2450 MHz;Duty Cycle: 1:1
Medium: HSL2450_200405 Medium parameters used : f = 2450 MHz; σ = 1.759 S/m; ε_r = 38.246; ρ = 1000 kg/m^3
Ambient Temperature：23.6 ℃; Liquid Temperature：22.6 ℃

DASY5 Configuration:
- Probe: EX3DV4 - SN3728;ConvF(7.33, 7.33, 7.33) @ 2450 MHz;Calibrated: 2020/2/4
- Sensor-Surface: 1.4mm (Mechanical Surface Detection)
- Electronics: DAE4 Sn854; Calibrated: 2019/5/21
- Phantom: ELI v5.0; Type: QDOVA002AA; Serial: TP:1238
- Measurement SW: DASY52, Version 52.10 (4);SEMCAD X Version 14.6.14 (7483)

Pin=250mW/Area Scan (71x71x1): Interpolated grid: dx=1.200 mm, dy=1.200 mm
Maximum value of SAR (interpolated) = 22.6 W/kg

Pin=250mW/Zoom Scan (7x7x7)/Cube 0: Measurement grid: dx=5mm, dy=5mm, dz=5mm
Reference Value = 113.9 V/m; Power Drift = -0.19 dB
Peak SAR (extrapolated) = 27.9 W/kg
SAR(1 g) = 13.5 W/kg; SAR(10 g) = 6.24 W/kg
Maximum value of SAR (measured) = 22.6 W/kg

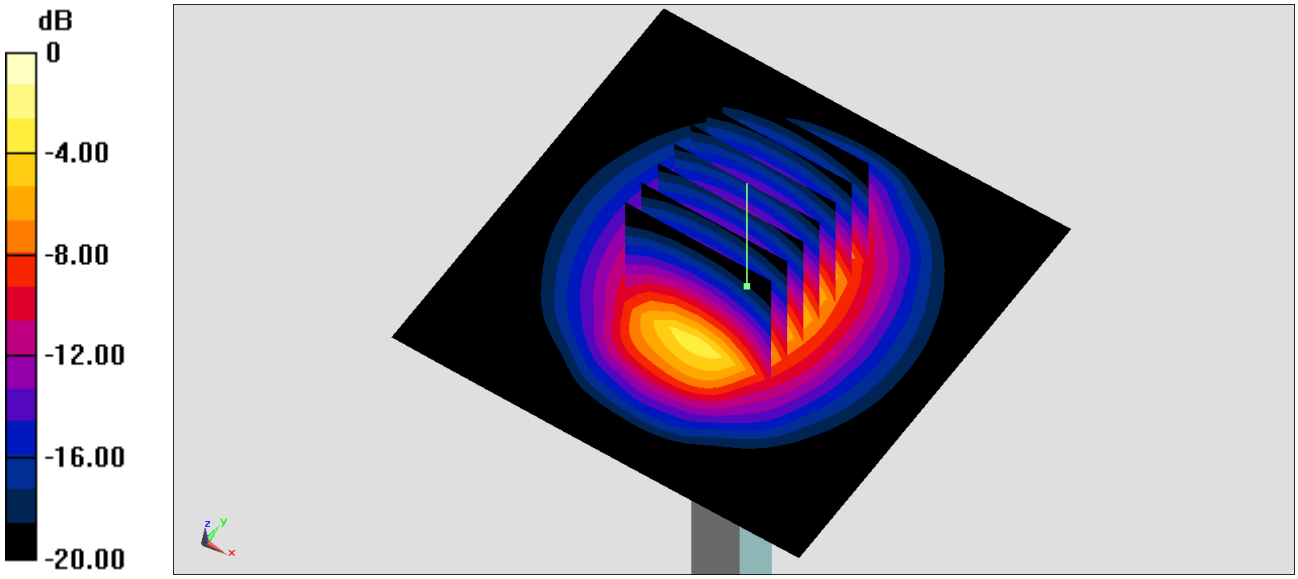

0 dB = 22.6 W/kg = 13.54 dBW/kg

System Check_Head_2600MHz

DUT: D2600V2-1008

Communication System: CW; Frequency: 2600 MHz;Duty Cycle: 1:1
Medium: HSL_2600_200326 Medium parameters used: f = 2600 MHz; σ = 1.967 S/m; ε_r = 38.171; ρ = 1000 kg/m^3
Ambient Temperature：23.6 ℃; Liquid Temperature：22.6 ℃

DASY5 Configuration:
- Probe: EX3DV4 - SN3931;ConvF(7.43, 7.43, 7.43) @ 2600 MHz;Calibrated: 2019/9/26
- Sensor-Surface: 1.4mm (Mechanical Surface Detection)
- Electronics: DAE3 Sn495; Calibrated: 2019/5/21
- Phantom: ELI v5.0; Type: QDOVA002AA; Serial: TP:1238
- Measurement SW: DASY52, Version 52.10 (4);SEMCAD X Version 14.6.14 (7483)

Pin=250mW/Area Scan (71x71x1): Interpolated grid: dx=1.200 mm, dy=1.200 mm
Maximum value of SAR (interpolated) = 25.8 W/kg

Pin=250mW/Zoom Scan (7x7x7)/Cube 0: Measurement grid: dx=5mm, dy=5mm, dz=5mm
Reference Value = 116.1 V/m; Power Drift = -0.11 dB
Peak SAR (extrapolated) = 31.3 W/kg
SAR(1 g) = 14.4 W/kg; SAR(10 g) = 6.32 W/kg
Maximum value of SAR (measured) = 25.0 W/kg

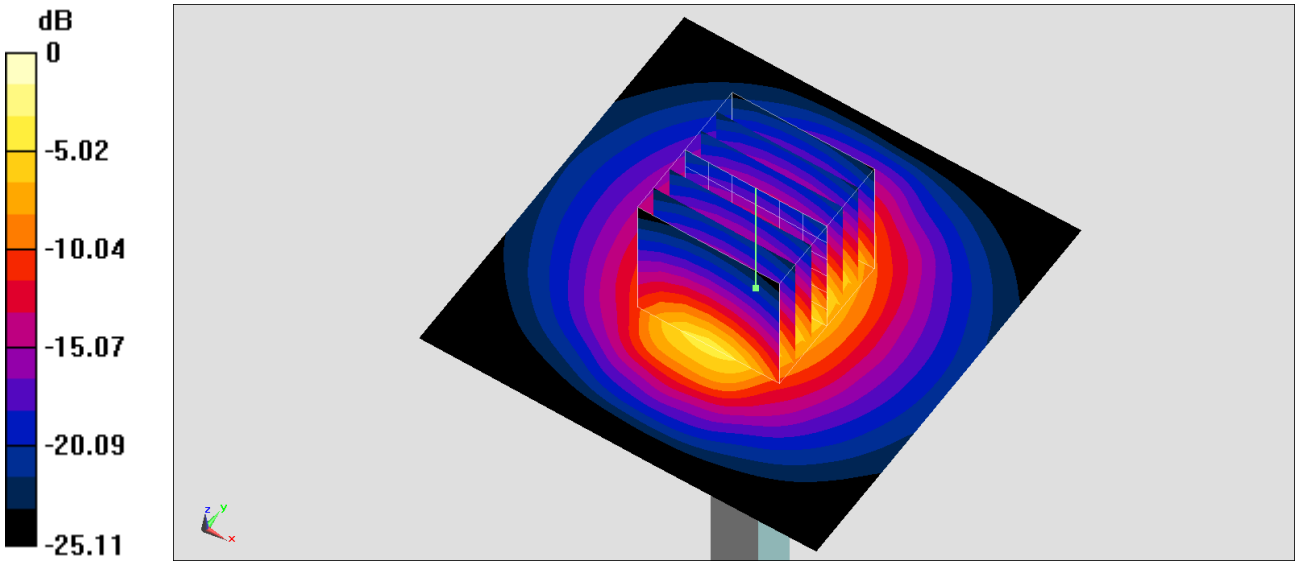

0 dB = 25.0 W/kg = 13.98 dBW/kg

System Check_Head_2600MHz

DUT: D2600V2-1008

Communication System: CW ; Frequency: 2600 MHz;Duty Cycle: 1:1
Medium: HSL_2600_200402 Medium parameters used: f = 2600 MHz; σ = 1.934 S/m; ε_r = 37.771; ρ = 1000 kg/m^3
Ambient Temperature：23.6 ℃; Liquid Temperature：22.6 ℃

DASY5 Configuration:
- Probe: EX3DV4 - SN3728;ConvF(7.08, 7.08, 7.08) @ 2600 MHz;Calibrated: 2020/2/4
- Sensor-Surface: 1.4mm (Mechanical Surface Detection)
- Electronics: DAE4 Sn854; Calibrated: 2019/5/21
- Phantom: ELI v5.0; Type: QDOVA002AA; Serial: TP:1238
- Measurement SW: DASY52, Version 52.10 (4);SEMCAD X Version 14.6.14 (7483)

Pin=250mW/Area Scan (71x71x1): Interpolated grid: dx=1.200 mm, dy=1.200 mm
Maximum value of SAR (interpolated) = 25.4 W/kg

Pin=250mW/Zoom Scan (7x7x7)/Cube 0: Measurement grid: dx=5mm, dy=5mm, dz=5mm
Reference Value = 115.6 V/m; Power Drift = -0.12 dB
Peak SAR (extrapolated) = 30.9 W/kg
SAR(1 g) = 14.4 W/kg; SAR(10 g) = 6.34 W/kg
Maximum value of SAR (measured) = 24.8 W/kg

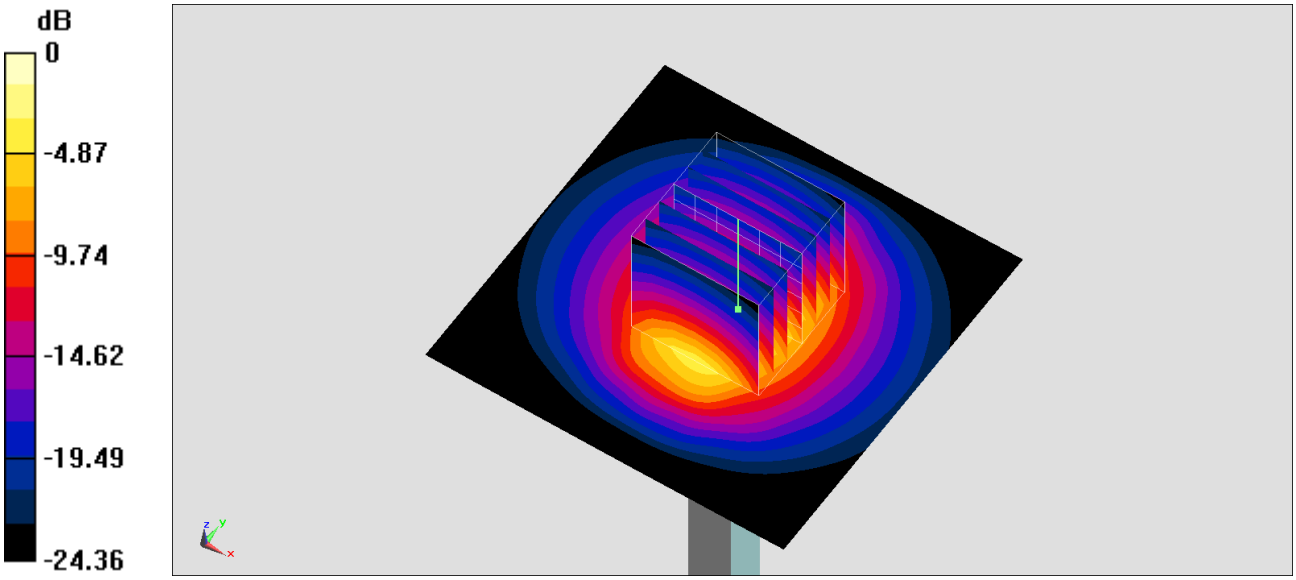

0 dB = 24.8 W/kg = 13.94 dBW/kg

System Check_Head_5250MHz

DUT: D5GHzV2-1006

Communication System: CW; Frequency: 5250 MHz;Duty Cycle: 1:1
Medium: HSL_5G_200329 Medium parameters used : f = 5250 MHz; σ = 4.7 S/m; ε_r = 36.549; ρ = 1000 kg/m^3
Ambient Temperature：23.4 ℃; Liquid Temperature：22.4 ℃

DASY5 Configuration:
- Probe: EX3DV4 - SN3728;ConvF(5.14, 5.14, 5.14) @ 5250 MHz;Calibrated: 2020/2/4
- Sensor-Surface: 1.4mm (Mechanical Surface Detection)
- Electronics: DAE4 Sn854; Calibrated: 2019/5/21
- Phantom: ELI v4.0; Type: QDOVA001BB; Serial: 1029
- Measurement SW: DASY52, Version 52.10 (4);SEMCAD X Version 14.6.14 (7483)

Pin=100mW/Area Scan (71x71x1): Interpolated grid: dx=1.000 mm, dy=1.000 mm
Maximum value of SAR (interpolated) = 22.8 W/kg

Pin=100mW/Zoom Scan (7x7x7)/Cube 0: Measurement grid: dx=4mm, dy=4mm, dz=1.4mm
Reference Value = 79.01 V/m; Power Drift = -0.17 dB
Peak SAR (extrapolated) = 32.2 W/kg
SAR(1 g) = 7.91 W/kg; SAR(10 g) = 2.24 W/kg
Maximum value of SAR (measured) = 20.2 W/kg

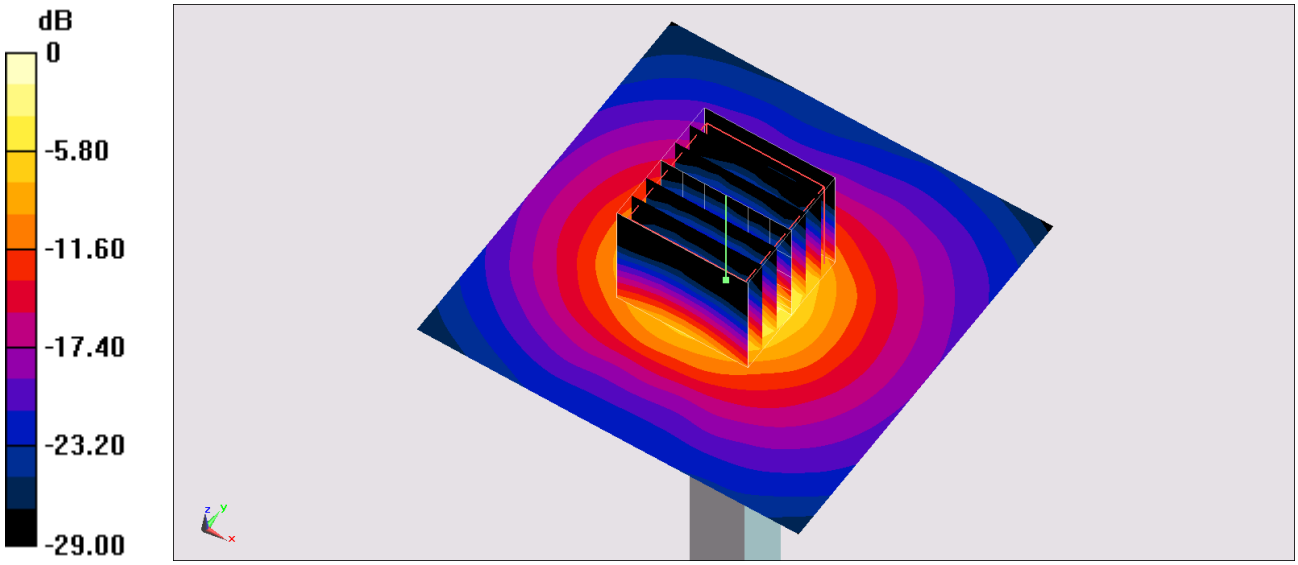

0 dB = 20.2 W/kg = 13.05 dBW/kg

System Check_Head_5600MHz

DUT: D5GHzV2-1006

Communication System: CW; Frequency: 5600 MHz;Duty Cycle: 1:1
Medium: HSL_5G_200329 Medium parameters used: f = 5600 MHz; σ = 5.026 S/m; ε_r = 36.398; ρ = 1000 kg/m^3
Ambient Temperature：23.4 ℃; Liquid Temperature：22.4 ℃

DASY5 Configuration:
- Probe: EX3DV4 - SN3728;ConvF(4.57, 4.57, 4.57) @ 5600 MHz;Calibrated: 2020/2/4
- Sensor-Surface: 1.4mm (Mechanical Surface Detection)
- Electronics: DAE4 Sn854; Calibrated: 2019/5/21
- Phantom: ELI v4.0; Type: QDOVA001BB; Serial: 1029
- Measurement SW: DASY52, Version 52.10 (4);SEMCAD X Version 14.6.14 (7483)

Pin=100mW/Area Scan (71x71x1): Interpolated grid: dx=1.000 mm, dy=1.000 mm
Maximum value of SAR (interpolated) = 21.6 W/kg

Pin=100mW/Zoom Scan (7x7x7)/Cube 0: Measurement grid: dx=4mm, dy=4mm, dz=1.4mm
Reference Value = 73.45 V/m; Power Drift = -0.05 dB
Peak SAR (extrapolated) = 38.2 W/kg
SAR(1 g) = 8.53 W/kg; SAR(10 g) = 2.41 W/kg
Maximum value of SAR (measured) = 22.3 W/kg

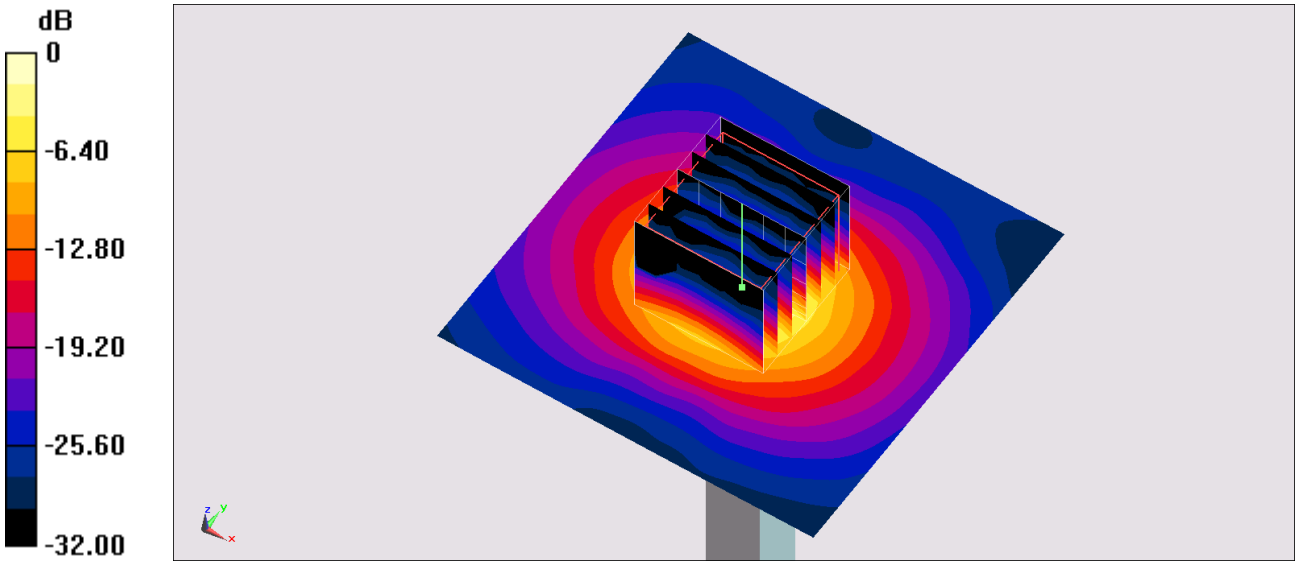

0 dB = 22.3 W/kg = 13.48 dBW/kg

System Check_Head_5750MHz

DUT: D5GHzV2-1006

Communication System: CW; Frequency: 5750 MHz;Duty Cycle: 1:1
Medium: HSL_5G_200329 Medium parameters used: f = 5750 MHz; σ = 5.186 S/m; ε_r = 36.137; ρ = 1000 kg/m^3
Ambient Temperature：23.4 ℃; Liquid Temperature：22.4 ℃

DASY5 Configuration:
- Probe: EX3DV4 - SN3728;ConvF(4.78, 4.78, 4.78) @ 5750 MHz;Calibrated: 2020/2/4
- Sensor-Surface: 1.4mm (Mechanical Surface Detection)
- Electronics: DAE4 Sn854; Calibrated: 2019/5/21
- Phantom: ELI v4.0; Type: QDOVA001BB; Serial: 1029
- Measurement SW: DASY52, Version 52.10 (4);SEMCAD X Version 14.6.14 (7483)

Pin=100mW/Area Scan (71x71x1): Interpolated grid: dx=1.000 mm, dy=1.000 mm
Maximum value of SAR (interpolated) = 21.3 W/kg

Pin=100mW/Zoom Scan (7x7x7)/Cube 0: Measurement grid: dx=4mm, dy=4mm, dz=1.4mm
Reference Value = 72.03 V/m; Power Drift = -0.12 dB
Peak SAR (extrapolated) = 36.8 W/kg
SAR(1 g) = 7.84 W/kg; SAR(10 g) = 2.21 W/kg
Maximum value of SAR (measured) = 20.7 W/kg

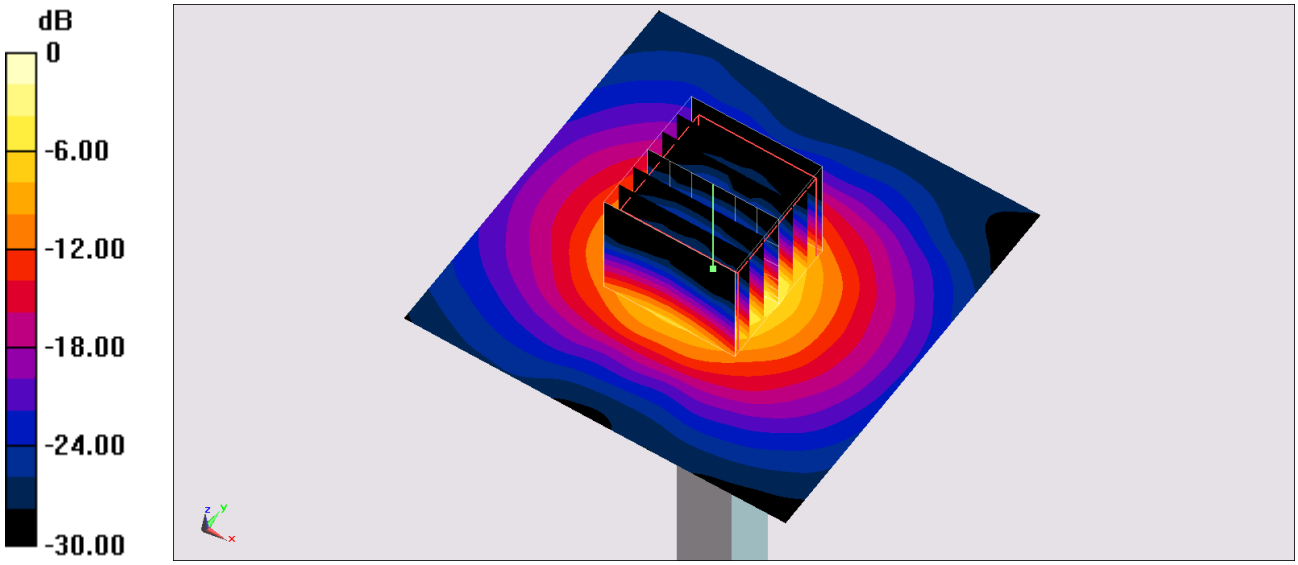

0 dB = 20.7 W/kg = 13.16 dBW/kg