FCC SAR Test Report

APPLICANT	:	Arima Communication Corporation
EQUIPMENT	:	8" tablet
BRAND NAME	:	Nabi
MODEL NAME	:	NBX208HQCG
MARKETING NAME	:	Nabi ELEV-8
FCC ID	:	PJONBX208HQCG
STANDARD	:	FCC 47 CFR Part 2 (2.1093) ANSI/IEEE C95.1-1992 IEEE 1528-2003

We, SPORTON INTERNATIONAL (SHENZHEN) INC., would like to declare that the tested sample has been evaluated in accordance with the procedures and had been in compliance with the applicable technical standards.

The test results in this report apply exclusively to the tested model / sample. Without written approval of SPORTON INTERNATIONAL (SHENZHEN) INC., the test report shall not be reproduced except in full.

Reviewed by: Eric Huang / Deputy Manager

Approved by: Jones Tsai / Manager

Testing Laboratory
2353

SPORTON INTERNATIONAL (SHENZHEN) INC.
1F & 2F,Building A, Morning Business Center, No. 4003 ShiGu Rd., Xili Town, Nanshan District, Shenzhen, Guangdong, P. R. China

Table of Contents

1. Statement of Compliance **4**
2. Administration Data **5**
3. Guidance Standard **5**
4. Equipment Under Test (EUT) **6**
4.1 General Information 6
4.2 Maximum Tune-up Limit 7
5. RF Exposure Limits **9**
5.1 Uncontrolled Environment 9
5.2 Controlled Environment 9
6. Specific Absorption Rate (SAR) **10**
6.1 Introduction 10
6.2 SAR Definition 10
7. System Description and Setup **11**
8. Measurement Procedures **12**
8.1 Spatial Peak SAR Evaluation 12
8.2 Power Reference Measurement 13
8.3 Area Scan 13
8.4 Zoom Scan 14
8.5 Volume Scan Procedures 14
8.6 Power Drift Monitoring 14
9. Test Equipment List **15**
10. System Verification **16**
10.1 Tissue Verification 16
10.2 System Performance Check Results 17
11. RF Exposure Positions **18**
11.1 SAR Testing for Tablet 18
12. Conducted RF Output Power (Unit: dBm) **19**
13. Antenna Location **24**
14. SAR Test Results **26**
14.1 Body SAR 27
14.2 Repeated SAR Measurement 28
15. Simultaneous Transmission Analysis **29**
16. Uncertainty Assessment **30**
17. References **33**
Appendix A. Plots of System Performance Check
Appendix B. Plots of High SAR Measurement
Appendix C. DASY Calibration Certificate
Appendix D. Setup Photographs

Revision History

REPORT NO.	VERSION	DESCRIPTION	ISSUED DATE
FA570801	Rev. 01	Initial issue of report	Aug. 12, 2015

1. Statement of Compliance

The maximum results of Specific Absorption Rate (SAR) found during testing for **Arima Communication Corporation, 8" tablet, NBX208HQCG** are as follows.

Equipment Class	Frequency Band	Highest SAR Summary
		Body 1g SAR (W/kg) (0cm Gap)
DTS	WLAN 2.4GHz Band	**1.42**
NII	WLAN 5.3GHz Band	0.69
	WLAN 5.5GHz Band	1.28
	WLAN 5.8GHz Band	0.79
DSS	Bluetooth	0.62
Date of Testing:		2015.07.28 ~ 2015.07.30

This device is in compliance with Specific Absorption Rate (SAR) for general population/uncontrolled exposure limits (1.6 W/kg) specified in FCC 47 CFR part 2 (2.1093) and ANSI/IEEE C95.1-1992, and had been tested in accordance with the measurement methods and procedures specified in IEEE 1528-2003.

2. Administration Data

Testing Laboratory	
Test Site	SPORTON INTERNATIONAL (SHENZHEN) INC.
Test Site Location	1F & 2F,Building A, Morning Business Center, No. 4003 ShiGu Rd., Xili Town, Nanshan District, Shenzhen, Guangdong, P. R. China TEL: +86-755-8637-9589 FAX: +86-755-8637-9595

Applicant	
Company Name	Arima Communication Corporation
Address	No.16, Lane 658, Yingtao Rd., Yingge Dist., New Taipei City 23943, Taiwan (R.O.C.)

Manufacturer	
Company Name	Arima Communication Corporation
Address	No.16, Lane 658, Yingtao Rd., Yingge Dist., New Taipei City 23943, Taiwan (R.O.C.)

3. Guidance Standard

The Specific Absorption Rate (SAR) testing specification, method, and procedure for this device is in accordance with the following standards:

- FCC 47 CFR Part 2 (2.1093)
- ANSI/IEEE C95.1-1992
- IEEE 1528-2003
- FCC KDB 865664 D01 SAR Measurement 100 MHz to 6 GHz v01r03
- FCC KDB 865664 D02 SAR Reporting v01r01
- FCC KDB 447498 D01 General RF Exposure Guidance v05r02
- FCC KDB 248227 D01 802.11 Wi-Fi SAR v02r01
- FCC KDB 616217 D04 SAR for laptop and tablets v01r01

4. Equipment Under Test (EUT)

4.1 General Information

Product Feature & Specification	
Equipment Name	8" tablet
Brand Name	Nabi
Model Name	NBX208HQCG
Marketing Name	Nabi ELEV-8
FCC ID	PJONBX208HQCG
Wireless Technology and Frequency Range	WLAN 2.4GHz Band: 2412 MHz ~ 2462 MHz WLAN 5.2GHz Band: 5180 MHz ~ 5240 MHz WLAN 5.3GHz Band: 5260 MHz ~ 5320 MHz WLAN 5.5GHz Band: 5500 MHz ~ 5700 MHz WLAN 5.8GHz Band: 5745 MHz ~ 5825 MHz Bluetooth: 2402 MHz ~ 2480 MHz NFC : 13.56 MHz
Mode	•802.11a/b/g/n HT20/ n HT40 •Bluetooth v3.0+EDR, Bluetooth v4.0 LE •NFC:ASK
HW Version	3320MB-003
SW Version	S1_PCBA_DVT_0626_v1 with s1_CV_4.24V patch
EUT Stage	Production Unit

Remark:
1. This device has no voice function.
2. WLAN operation in 5600 MHz ~ 5650 MHz is notched.

4.2 Maximum Tune-up Limit

Mode			Maximum Average Power (dBm)
2.4GHz	802.11b	CH 1	16.0
		CH 6	16.0
		CH 11	15.5
	802.11g	CH 1	14.0
		CH 6	15.0
		CH 11	14.0
	802.11n-HT20	CH 1	12.0
		CH 6	13.0
		CH 11	12.0
	802.11n-HT40	CH 3	13.0
		CH 6	13.0
		CH 9	13.0
Bluetooth v3.0+EDR		CH 00	11.0
		CH 39	11.5
		CH 78	11.5
Bluetooth v4.0 LE			2.0

Mode			Average Power (dBm)
5.2GHz	802.11a		10.0
	802.11n HT20		11.0
	802.11n HT40		10.0
5.3GHz	802.11a		10.5
	802.11n HT20		11.0
	802.11n HT40		10.0
5.5GHz	802.11a	CH 100	11.0
		CH 116	9.5
		CH 132	9.5
		CH 140	9.5
	802.11n HT20	CH 100	10.0
		CH 116	9.0
		CH 132	9.0
		CH 140	9.0
	802.11n HT40	CH 102	9.0
		CH 110	9.0
		CH 134	10.5
5.8GHz	802.11a	CH 149	10.5
		CH 157	11.0
		CH 165	10.5
	802.11n-HT20	CH 149	10.0
		CH 157	10.0
		CH 165	10.0
	802.11n-HT40	CH 151	10.0
		CH 159	10.0

5. RF Exposure Limits

5.1 Uncontrolled Environment

Uncontrolled Environments are defined as locations where there is the exposure of individuals who have no knowledge or control of their exposure. The general population/uncontrolled exposure limits are applicable to situations in which the general public may be exposed or in which persons who are exposed as a consequence of their employment may not be made fully aware of the potential for exposure or cannot exercise control over their exposure. Members of the general public would come under this category when exposure is not employment-related; for example, in the case of a wireless transmitter that exposes persons in its vicinity.

5.2 Controlled Environment

Controlled Environments are defined as locations where there is exposure that may be incurred by persons who are aware of the potential for exposure, (i.e. as a result of employment or occupation). In general, occupational/controlled exposure limits are applicable to situations in which persons are exposed as a consequence of their employment, who have been made fully aware of the potential for exposure and can exercise control over their exposure. The exposure category is also applicable when the exposure is of a transient nature due to incidental passage through a location where the exposure levels may be higher than the general population/uncontrolled limits, but the exposed person is fully aware of the potential for exposure and can exercise control over his or her exposure by leaving the area or by some other appropriate means.

Limits for Occupational/Controlled Exposure (W/kg)

Whole-Body	Partial-Body	Hands, Wrists, Feet and Ankles
0.4	8.0	20.0

Limits for General Population/Uncontrolled Exposure (W/kg)

Whole-Body	Partial-Body	Hands, Wrists, Feet and Ankles
0.08	1.6	4.0

1. Whole-Body SAR is averaged over the entire body, partial-body SAR is averaged over any 1gram of tissue defined as a tissue volume in the shape of a cube. SAR for hands, wrists, feet and ankles is averaged over any 10 grams of tissue defined as a tissue volume in the shape of a cube.

6. Specific Absorption Rate (SAR)

6.1 Introduction

SAR is related to the rate at which energy is absorbed per unit mass in an object exposed to a radio field. The SAR distribution in a biological body is complicated and is usually carried out by experimental techniques or numerical modeling. The standard recommends limits for two tiers of groups, occupational/controlled and general population/uncontrolled, based on a person's awareness and ability to exercise control over his or her exposure. In general, occupational/controlled exposure limits are higher than the limits for general population/uncontrolled.

6.2 SAR Definition

The SAR definition is the time derivative (rate) of the incremental energy (dW) absorbed by (dissipated in) an incremental mass (dm) contained in a volume element (dv) of a given density (ρ). The equation description is as below:

$$\mathbf{SAR} = \frac{\mathbf{d}}{\mathbf{dt}}\left(\frac{\mathbf{dW}}{\mathbf{dm}}\right) = \frac{\mathbf{d}}{\mathbf{dt}}\left(\frac{\mathbf{dW}}{\boldsymbol{\rho}\mathbf{dv}}\right)$$

SAR is expressed in units of Watts per kilogram (W/kg)

$$\mathbf{SAR} = \frac{\boldsymbol{\sigma}|\mathbf{E}|^2}{\boldsymbol{\rho}}$$

Where: σ is the conductivity of the tissue, ρ is the mass density of the tissue and E is the RMS electrical field strength.

7. System Description and Setup

The DASY system used for performing compliance tests consists of the following items:

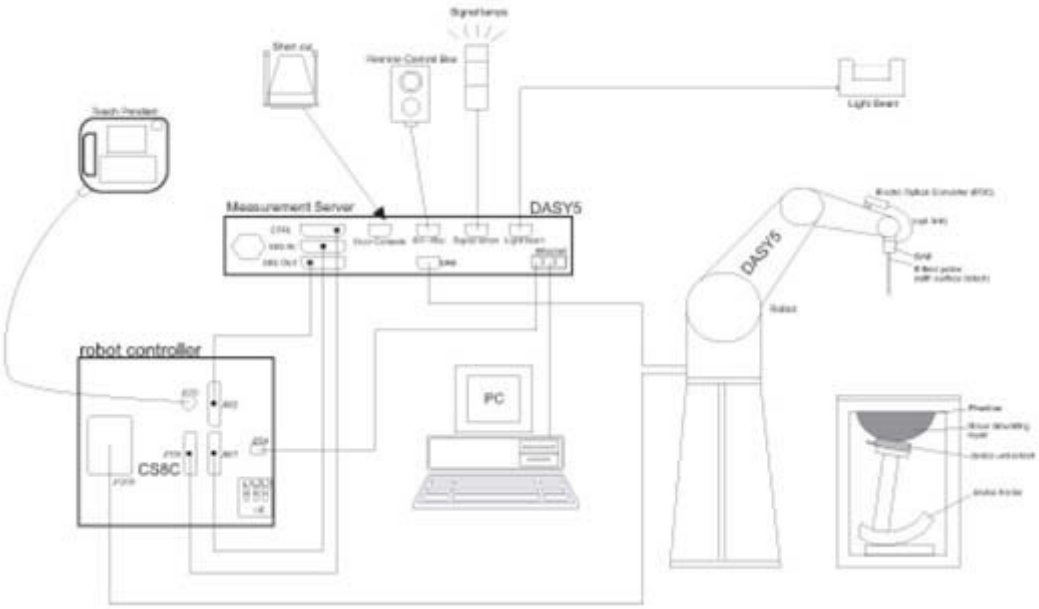

- A standard high precision 6-axis robot with controller, teach pendant and software. An arm extension for accommodating the data acquisition electronics (DAE).
- An isotropic Field probe optimized and calibrated for the targeted measurement.
- A data acquisition electronics (DAE) which performs the signal amplification, signal multiplexing, AD-conversion, offset measurements, mechanical surface detection, collision detection, etc. The unit is battery powered with standard or rechargeable batteries. The signal is optically transmitted to the EOC.
- The Electro-optical converter (EOC) performs the conversion from optical to electrical signals for the digital communication to the DAE. To use optical surface detection, a special version of the EOC is required. The EOC signal is transmitted to the measurement server.
- The function of the measurement server is to perform the time critical tasks such as signal filtering, control of the robot operation and fast movement interrupts.
- The Light Beam used is for probe alignment. This improves the (absolute) accuracy of the probe positioning.
- A computer running WinXP or Win7 and the DASY5 software.
- Remote control and teach pendant as well as additional circuitry for robot safety such as warning lamps, etc.
- The phantom, the device holder and other accessories according to the targeted measurement.

8. Measurement Procedures

The measurement procedures are as follows:

<Conducted power measurement>

(a) For WLAN/BT power measurement, use engineering software to configure EUT WLAN/BT continuously transmission, at maximum RF power in each supported wireless interface and frequency band
(b) Connect EUT RF port through RF cable to the power meter, and measure WLAN/BT output power

<SAR measurement>

(a) Engineering software to configure EUT WLAN/BT continuously transmission, at maximum RF power, in the highest power channel.
(b) Place the EUT in the positions as Appendix D demonstrates.
(c) Set scan area, grid size and other setting on the DASY software.
(d) Measure SAR results for the highest power channel on each testing position.
(e) Find out the largest SAR result on these testing positions of each band
(f) Measure SAR results for other channels in worst SAR testing position if the reported SAR of highest power channel is larger than 0.8 W/kg

According to the test standard, the recommended procedure for assessing the peak spatial-average SAR value consists of the following steps:

(a) Power reference measurement
(b) Area scan
(c) Zoom scan
(d) Power drift measurement

8.1 Spatial Peak SAR Evaluation

The procedure for spatial peak SAR evaluation has been implemented according to the test standard. It can be conducted for 1g and 10g, as well as for user-specific masses. The DASY software includes all numerical procedures necessary to evaluate the spatial peak SAR value.

The base for the evaluation is a "cube" measurement. The measured volume must include the 1g and 10g cubes with the highest averaged SAR values. For that purpose, the center of the measured volume is aligned to the interpolated peak SAR value of a previously performed area scan.

The entire evaluation of the spatial peak values is performed within the post-processing engine (SEMCAD). The system always gives the maximum values for the 1g and 10g cubes. The algorithm to find the cube with highest averaged SAR is divided into the following stages:

(a) Extraction of the measured data (grid and values) from the Zoom Scan
(b) Calculation of the SAR value at every measurement point based on all stored data (A/D values and measurement parameters)
(c) Generation of a high-resolution mesh within the measured volume
(d) Interpolation of all measured values form the measurement grid to the high-resolution grid
(e) Extrapolation of the entire 3-D field distribution to the phantom surface over the distance from sensor to surface
(f) Calculation of the averaged SAR within masses of 1g and 10g

8.2 Power Reference Measurement

The Power Reference Measurement and Power Drift Measurements are for monitoring the power drift of the device under test in the batch process. The minimum distance of probe sensors to surface determines the closest measurement point to phantom surface. This distance cannot be smaller than the distance of sensor calibration points to probe tip as defined in the probe properties.

8.3 Area Scan

The area scan is used as a fast scan in two dimensions to find the area of high field values, before doing a fine measurement around the hot spot. The sophisticated interpolation routines implemented in DASY software can find the maximum found in the scanned area, within a range of the global maximum. The range (in dB0 is specified in the standards for compliance testing. For example, a 2 dB range is required in IEEE standard 1528 and IEC 62209 standards, whereby 3 dB is a requirement when compliance is assessed in accordance with the ARIB standard (Japan), if only one zoom scan follows the area scan, then only the absolute maximum will be taken as reference. For cases where multiple maximums are detected, the number of zoom scans has to be increased accordingly.

Area scan parameters extracted from FCC KDB 865664 D01v01r03 SAR measurement 100 MHz to 6 GHz.

	≤ 3 GHz	> 3 GHz
Maximum distance from closest measurement point (geometric center of probe sensors) to phantom surface	5 ± 1 mm	½·δ·ln(2) ± 0.5 mm
Maximum probe angle from probe axis to phantom surface normal at the measurement location	30° ± 1°	20° ± 1°
Maximum area scan spatial resolution: Δx_{Area}, Δy_{Area}	≤ 2 GHz: ≤ 15 mm 2 – 3 GHz: ≤ 12 mm	3 – 4 GHz: ≤ 12 mm 4 – 6 GHz: ≤ 10 mm
	When the x or y dimension of the test device, in the measurement plane orientation, is smaller than the above, the measurement resolution must be ≤ the corresponding x or y dimension of the test device with at least one measurement point on the test device.	

8.4 Zoom Scan

Zoom scans are used assess the peak spatial SAR values within a cubic averaging volume containing 1 gram and 10 gram of simulated tissue. The zoom scan measures points (refer to table below) within a cube shoes base faces are centered on the maxima found in a preceding area scan job within the same procedure. When the measurement is done, the zoom scan evaluates the averaged SAR for 1 gram and 10 gram and displays these values next to the job's label.

Zoom scan parameters extracted from FCC KDB 865664 D01v01r03 SAR measurement 100 MHz to 6 GHz.

			≤ 3 GHz	> 3 GHz
Maximum zoom scan spatial resolution: Δx_{Zoom}, Δy_{Zoom}			≤ 2 GHz: ≤ 8 mm 2 – 3 GHz: ≤ 5 mm*	3 – 4 GHz: ≤ 5 mm* 4 – 6 GHz: ≤ 4 mm*
Maximum zoom scan spatial resolution, normal to phantom surface	uniform grid: $\Delta z_{Zoom}(n)$		≤ 5 mm	3 – 4 GHz: ≤ 4 mm 4 – 5 GHz: ≤ 3 mm 5 – 6 GHz: ≤ 2 mm
	graded grid	$\Delta z_{Zoom}(1)$: between 1st two points closest to phantom surface	≤ 4 mm	3 – 4 GHz: ≤ 3 mm 4 – 5 GHz: ≤ 2.5 mm 5 – 6 GHz: ≤ 2 mm
		$\Delta z_{Zoom}(n>1)$: between subsequent points	$\leq 1.5 \cdot \Delta z_{Zoom}(n-1)$	
Minimum zoom scan volume	x, y, z		≥ 30 mm	3 – 4 GHz: ≥ 28 mm 4 – 5 GHz: ≥ 25 mm 5 – 6 GHz: ≥ 22 mm

Note: δ is the penetration depth of a plane-wave at normal incidence to the tissue medium; see draft standard IEEE P1528-2011 for details.

* When zoom scan is required and the *reported* SAR from the *area scan based 1-g SAR estimation* procedures of KDB 447498 is ≤ 1.4 W/kg, ≤ 8 mm, ≤ 7 mm and ≤ 5 mm zoom scan resolution may be applied, respectively, for 2 GHz to 3 GHz, 3 GHz to 4 GHz and 4 GHz to 6 GHz.

8.5 Volume Scan Procedures

The volume scan is used for assess overlapping SAR distributions for antennas transmitting in different frequency bands. It is equivalent to an oversized zoom scan used in standalone measurements. The measurement volume will be used to enclose all the simultaneous transmitting antennas. For antennas transmitting simultaneously in different frequency bands, the volume scan is measured separately in each frequency band. In order to sum correctly to compute the 1g aggregate SAR, the EUT remain in the same test position for all measurements and all volume scan use the same spatial resolution and grid spacing. When all volume scan were completed, the software, SEMCAD postprocessor can combine and subsequently superpose these measurement data to calculating the multiband SAR.

8.6 Power Drift Monitoring

All SAR testing is under the EUT install full charged battery and transmit maximum output power. In DASY measurement software, the power reference measurement and power drift measurement procedures are used for monitoring the power drift of EUT during SAR test. Both these procedures measure the field at a specified reference position before and after the SAR testing. The software will calculate the field difference in dB. If the power drifts more than 5%, the SAR will be retested.

9. Test Equipment List

Manufacturer	Name of Equipment	Type/Model	Serial Number	Calibration	
				Last Cal.	Due Date
SPEAG	2450MHz System Validation Kit	D2450V2	840	Nov. 19, 2014	Nov. 18, 2015
SPEAG	5000MHz System Validation Kit	D5GHzV2	1113	Nov. 24, 2014	Nov. 23, 2015
SPEAG	Data Acquisition Electronics	DAE4	1303	Dec. 11, 2014	Dec. 10, 2015
SPEAG	Dosimetric E-Field Probe	EX3DV4	3819	Nov. 13, 2014	Nov. 12, 2015
SPEAG	ELI4 Phantom	QD OVA 002 AA	TP-1149	NCR	NCR
SPEAG	Phone Positioner	N/A	N/A	NCR	NCR
R&S	Network Analyzer	ZVB8	100106	Sep. 29, 2014	Sep. 28, 2015
Speag	Dielectric Assessment KIT	DAK-3.5	1032	NCR	NCR
R&S	Signal Generator	SMBV100A	258305	Jan. 23, 2015	Jan. 22, 2016
Anritsu	Power Sensor	MA2411B	1207253	Jan. 28, 2015	Jan. 27, 2016
Anritsu	Power Meter	ML2495A	1218010	Jan. 28, 2015	Jan. 27, 2016
Anritsu	Power Senor	MA2411B	917070	Jan. 23, 2015	Jan. 22, 2016
Anritsu	Power Meter	ML2495A	1005002	Jan. 23, 2015	Jan. 22, 2016
ARRA	Power Divider	A3200-2	N/A	NA	NA
R&S	CBT BLUETOOTH TESTER	CBT	100783	Aug. 11, 2014	Aug. 10, 2015
R&S	Spectrum Analyzer	FSP30	101362	Sep. 29, 2014	Sep. 28, 2015
Agilent	Dual Directional Coupler	778D	50422	Note1	
Woken	Attenuator 1	WK0602-XX	N/A	Note1	
PE	Attenuator 2	PE7005-10	N/A	Note1	
PE	Attenuator 3	PE7005- 3	N/A	Note1	
AR	Power Amplifier	5S1G4M2	0328767	Note1	
Mini-Circuits	Power Amplifier	ZVE-3W	162601250	Note1	
Mini-Circuits	Power Amplifier	ZHL-42W+	13440021344	Note1	

General Note:

1. Prior to system verification and validation, the path loss from the signal generator to the system check source and the power meter, which includes the amplifier, cable, attenuator and directional coupler, was measured by the network analyzer. The reading of the power meter was offset by the path loss difference between the path to the power meter and the path to the system check source to monitor the actual power level fed to the system check source.

10. System Verification

10.1 Tissue Verification

The following tissue formulations are provided for reference only as some of the parameters have not been thoroughly verified. The composition of ingredients may be modified accordingly to achieve the desired target tissue parameters required for routine SAR evaluation.

Frequency (MHz)	Water (%)	Sugar (%)	Cellulose (%)	Salt (%)	Preventol (%)	DGBE (%)	Conductivity (σ)	Permittivity (εr)
For Head								
2450	55.0	0	0	0	0	45.0	1.80	39.2
For Body								
2450	68.6	0	0	0	0	31.4	1.95	52.7

Simulating Liquid for 5GHz, Manufactured by SPEAG

Ingredients	(% by weight)
Water	64~78%
Mineral oil	11~18%
Emulsifiers	9~15%
Additives and Salt	2~3%

<Tissue Dielectric Parameter Check Results>

Frequency (MHz)	Tissue Type	Liquid Temp. (℃)	Conductivity (σ)	Permittivity (ε_r)	Conductivity Target (σ)	Permittivity Target (ε_r)	Delta (σ) (%)	Delta (ε_r) (%)	Limit (%)	Date
2450	Body	22.8	1.992	52.291	1.95	52.70	2.15	-0.78	±5	2015/7/28
5300	Body	22.9	5.251	47.988	5.42	48.90	-3.12	-1.87	±5	2015/7/29
5600	Body	22.8	5.644	47.452	5.77	48.50	-2.18	-2.16	±5	2015/7/30
5800	Body	22.6	5.868	46.994	6.00	48.20	-2.20	-2.50	±5	2015/7/30

10.2 System Performance Check Results

Comparing to the original SAR value provided by SPEAG, the verification data should be within its specification of 10 %. Below table shows the target SAR and measured SAR after normalized to 1W input power. The table below indicates the system performance check can meet the variation criterion and the plots can be referred to Appendix A of this report.

Date	Frequency (MHz)	Tissue Type	Input Power (mW)	Dipole S/N	Probe S/N	DAE S/N	Measured SAR (W/kg)	Targeted SAR (W/kg)	Normalized SAR (W/kg)	Deviation (%)
2015/7/28	2450	Body	250	D2450V2-840	3819	1303	13.50	51.00	54	5.88
2015/7/29	5300	Body	100	D5GHzV2-1113	3819	1303	8.24	77.80	82.4	5.91
2015/7/30	5600	Body	100	D5GHzV2-1113	3819	1303	8.50	81.50	85	4.29
2015/7/30	5800	Body	100	D5GHzV2-1113	3819	1303	7.89	75.40	78.9	4.64

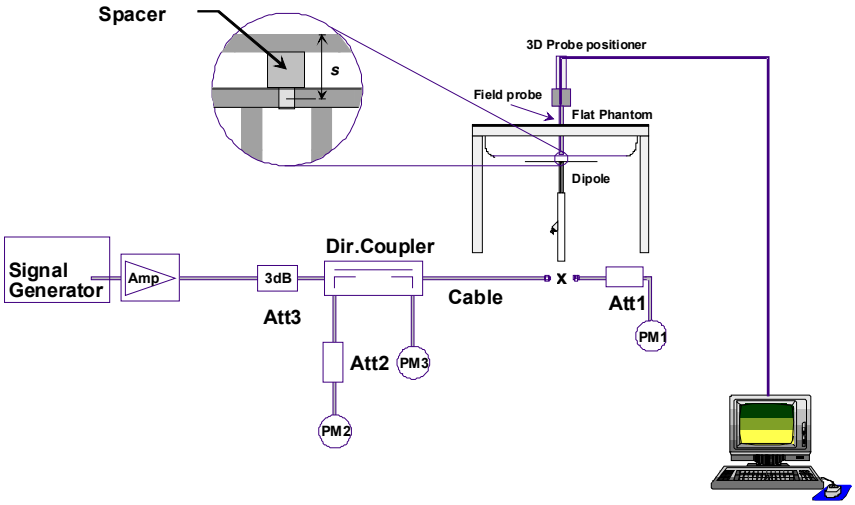

Fig 8.3.1 System Performance Check Setup

Fig 8.3.2 Setup Photo

11. RF Exposure Positions

11.1 SAR Testing for Tablet

This device can be used also in full sized tablet exposure conditions, due to its size. Per FCC KDB 616217, the back surface and edges of the tablet should be tested for SAR compliance with the tablet touching the phantom. The SAR exclusion threshold in KDB 447498 D01v05r02 can be applied to determine SAR test exclusion for adjacent edge configurations. The closest distance from the antenna to an adjacent tablet edge is used to determine if SAR testing is required for the adjacent edges, with the adjacent edge positioned against the phantom and the edge containing the antenna positioned perpendicular to the phantom.

12. Conducted RF Output Power (Unit: dBm)

<WLAN Conducted Power>

General Note:

1. Per KDB 248227 D01v02r01, SAR test reduction is determined according to 802.11 transmission mode configurations and certain exposure conditions with multiple test positions. In the 2.4 GHz band, separate SAR procedures are applied to DSSS and OFDM configurations to simplify DSSS test requirements. For OFDM, in both 2.4 and 5 GHz bands, an initial test configuration must be determined for each standalone and aggregated frequency band, according to the transmission mode configuration with the highest maximum output power specified for production units to perform SAR measurements. If the same highest maximum output power applies to different combinations of channel bandwidths, modulations and data rates, additional procedures are applied to determine which test configurations require SAR measurement. When applicable, an initial test position may be applied to reduce the number of SAR measurements required for next to the ear, UMPC mini-tablet or hotspot mode configurations with multiple test positions.
2. For 2.4 GHz 802.11b DSSS, either the initial test position procedure for multiple exposure test positions or the DSSS procedure for fixed exposure position is applied; these are mutually exclusive. For 2.4 GHz and 5 GHz OFDM configurations, the initial test configuration is applied to measure SAR using either the initial test position procedure for multiple exposure test position configurations or the initial test configuration procedures for fixed exposure test conditions. Based on the reported SAR of the measured configurations and maximum output power of the transmission mode configurations that are not included in the initial test configuration, the subsequent test configuration and initial test position procedures are applied to determine if SAR measurements are required for the remaining OFDM transmission configurations. In general, the number of test channels that require SAR measurement is minimized based on maximum output power measured for the test sample(s).
3. For OFDM transmission configurations in the 2.4 GHz and 5 GHz bands, When the same maximum power is specified for multiple transmission modes in a frequency band, the largest channel bandwidth, lowest order modulation, lowest data rate and lowest order 802.11a/g/n/ac mode is used for SAR measurement, on the highest measured output power channel for each frequency band.
4. DSSS and OFDM configurations are considered separately according to the required SAR procedures. SAR is measured in the initial test position using the 802.11 transmission mode configuration required by the DSSS procedure or initial test configuration and subsequent test configuration(s) according to the OFDM procedures.18 The initial test position procedure is described in the following:
   a. When the reported SAR of the initial test position is ≤ 0.4 W/kg, further SAR measurement is not required for the other test positions in that exposure configuration and 802.11 transmission mode combinations within the frequency band or aggregated band.
   b. When the reported SAR of the test position is > 0.4 W/kg, SAR is repeated for the 802.11 transmission mode configuration tested in the initial test position to measure the subsequent next closet/smallest test separation distance and maximum coupling test position on the highest maximum output power channel, until the report SAR is ≤ 0.8 W/kg or all required test position are tested.
   c. For all positions/configurations, when the reported SAR is > 0.8 W/kg, SAR is measured for these test positions/configurations on the subsequent next highest measured output power channel(s) until the reported SAR is ≤ 1.2 W/kg or all required channels are tested.

	Mode	Channel	Frequency (MHz)	Data Rate	Average power (dBm)	Duty Cycle %
2.4GHz WLAN	802.11b	CH 1	2412	1Mbps	15.28	97.64
		CH 6	2437		**15.81**	
		CH 11	2462		14.98	
	802.11g	CH 1	2412	6Mbps	13.76	87.26
		CH 6	2437		**14.20**	
		CH 11	2462		13.52	
	802.11n-HT20	CH 1	2412	MCS0	11.80	86.47
		CH 6	2437		**12.22**	
		CH 11	2462		11.49	
	802.11n-HT40	CH 3	2422	MCS0	12.02	76.19
		CH 6	2437		**12.60**	
		CH 9	2452		12.24	

	Mode	Channel	Frequency (MHz)	Data Rate	Average power (dBm)	Duty Cycle %
5.2GHz WLAN	802.11a	CH 36	5180	6Mbps	9.06	87.20
		CH 40	5200		9.80	
		CH 44	5220		**9.95**	
		CH 48	5240		9.31	
	802.11n-HT20	CH 36	5180	MCS0	9.45	86.47
		CH 40	5200		10.21	
		CH 44	5220		**10.27**	
		CH 48	5240		9.65	
	802.11n-HT40	CH 38	5190	MCS0	9.28	76.30
		CH 46	5230		**9.59**	

	Mode	Channel	Frequency (MHz)	Data Rate	Average power (dBm)	Duty Cycle %
5.3GHz WLAN	802.11a	CH 52	5260	6Mbps	**10.05**	87.20
		CH 56	5280		9.50	
		CH 60	5300		9.02	
		CH 64	5320		9.65	
	802.11n-HT20	CH 52	5260	MCS0	**10.48**	86.47
		CH 56	5280		9.93	
		CH 60	5300		9.37	
		CH 64	5320		10.06	
	802.11n-HT40	CH 54	5270	MCS0	9.05	76.30
		CH 62	5310		**9.65**	

	Mode	Channel	Frequency (MHz)	Data Rate	Average power (dBm)	Duty Cycle %
5.5GHz WLAN	802.11a	CH 100	5500	6Mbps	**10.23**	87.20
		CH 116	5580		8.78	
		CH 132	5660		8.93	
		CH 140	5700		8.74	
	802.11n-HT20	CH 100	5500	MCS0	**9.61**	86.47
		CH 116	5580		8.15	
		CH 132	5660		8.71	
		CH 140	5700		8.58	
	802.11n-HT40	CH 102	5510	MCS0	8.22	76.30
		CH 110	5550		8.54	
		CH 134	5670		**10.15**	

	Mode	Channel	Frequency (MHz)	Data Rate	Average power (dBm)	Duty Cycle %
5.8GHz WLAN	802.11a	CH 149	5745	MCS0	10.07	87.20
		CH 157	5785		**10.47**	
		CH 165	5825		9.89	
	802.11n-HT20	CH 149	5745	MCS0	9.49	86.47
		CH 157	5785		**9.85**	
		CH 165	5825		9.34	
	802.11n-HT40	CH 151	5755	MCS0	**9.75**	76.30
		CH 159	5795		9.63	

<2.4GHz Bluetooth>

General Note:

1. For 2.4GHz Bluetooth SAR testing was selected 1Mbps, due to its highest average power.
2. The duty factor is selected theoretical 83.3% perform Bluetooth SAR testing.

Mode	Channel	Frequency (MHz)	Average power (dBm)		
			1Mbps	2Mbps	3Mbps
v3.0 with EDR	CH 00	2402	10.31	8.30	8.37
	CH 39	2441	11.13	9.20	9.24
	CH 78	2480	**11.16**	9.53	9.49

Mode	Channel	Frequency (MHz)	Average power (dBm)
			GFSK
v4.0 with LE	CH 00	2402	0.99
	CH 19	2440	1.61
	CH 39	2480	1.44

13. Antenna Location

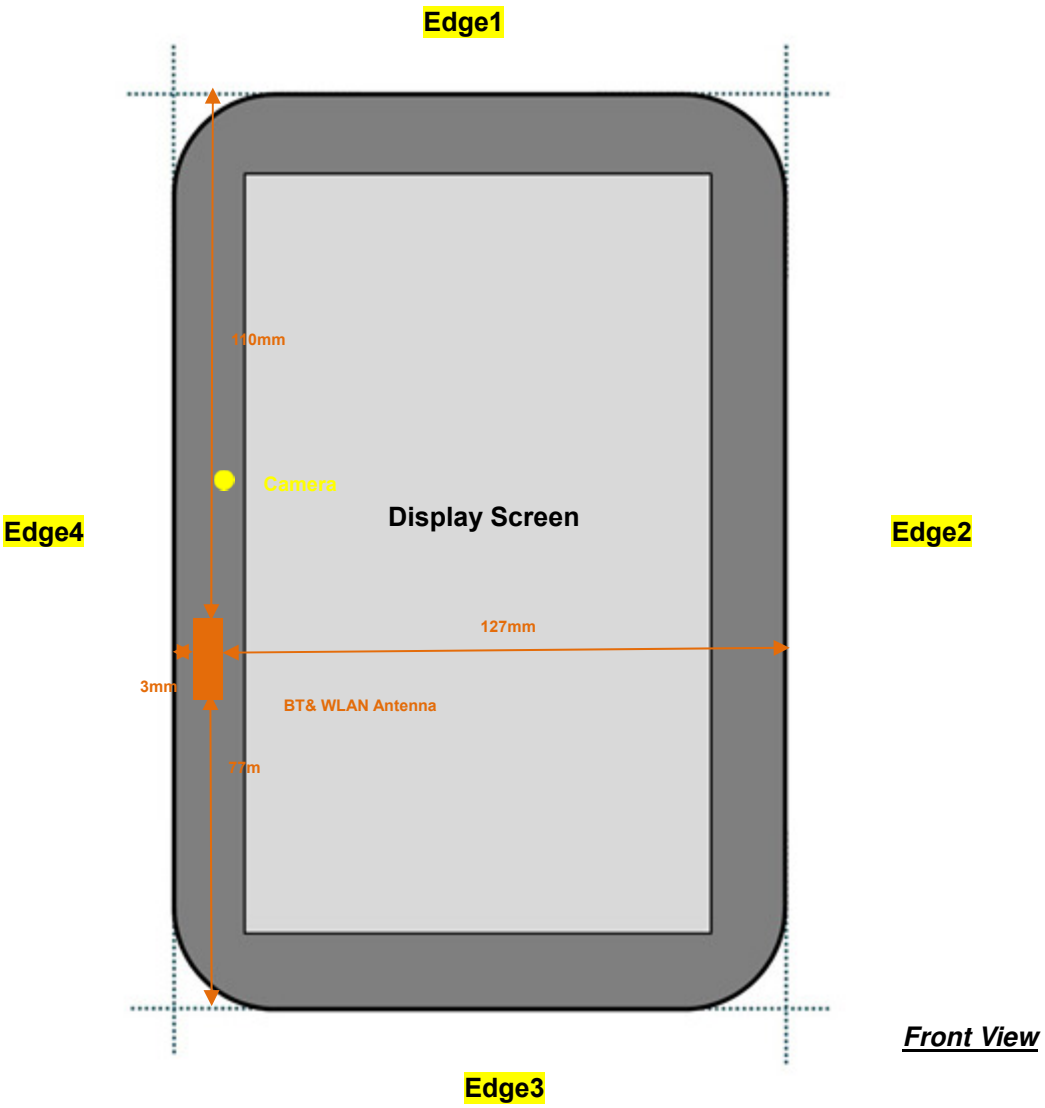

Front View

Diagonal Dimension : 246mm

General Note:

1. The below table, when the distance is < 50 mm exclusion threshold is "Ratio", when the distance is > 50 mm exclusion threshold is "mW"
2. Maximum power is the source-based time-average power and represents the maximum RF output power among production units
3. Per KDB 447498 D01v05r02, for larger devices, the test separation distance of adjacent edge configuration is determined by the closest separation between the antenna and the user.
4. Per KDB 447498 D01v05r02, standalone SAR test exclusion threshold is applied; If the test separation distance is < 5mm, 5mm is used to determine SAR exclusion threshold.
5. Per KDB 447498 D01v05r02, the 1-g and 10-g SAR test exclusion thresholds for 100 MHz to 6 GHz at *test separation distances* ≤ 50 mm are determined by:
   [(*max. power of channel, including tune-up tolerance, mW*)/(*min. test separation distance, mm*)] ·[√f(GHz)] ≤ 3.0 for 1-g SAR and ≤ 7.5 for 10-g extremity SAR
   - f(GHz) is the RF channel transmit frequency in GHz
   - Power and distance are rounded to the nearest mW and mm before calculation
   - The result is rounded to one decimal place for comparison
6. Per KDB 447498 D01v05r02, at 100 MHz to 6 GHz and for *test separation distances* > 50 mm, the SAR test exclusion threshold is determined according to the following
   a) [Threshold at 50 mm in step 1) + (test separation distance - 50 mm)·(f(MHz)/150)] mW, at 100 MHz to 1500 MHz
   b) [Threshold at 50 mm in step 1) + (test separation distance - 50 mm)·10] mW at > 1500 MHz and ≤ 6 GHz

SAR test exclusion table distance is ≤ 50mm

Exposure Position	Wireless Interface	BT	802.11b	802.11a
	Calculated Frequency	2480MHz	2462MHz	5825MHz
	Maximum power (dBm)	11.5	16	11
	Maximum rated power(mW)	14.0	40.0	13.0
Bottom Face	Separation distance(mm)	5.0	5.0	5.0
	exclusion threshold	4.4	12.6	6.3
	Testing required?	**Yes**	**Yes**	**Yes**
Edge 4	Separation distance(mm)	3.0	3.0	3.0
	exclusion threshold	4.4	12.6	6.3
	Testing required?	**Yes**	**Yes**	**Yes**

SAR test exclusion table distance is >50mm

Exposure Position	Wireless Interface	BT	802.11b	802.11a
	Calculated Frequency	2480MHz	2462MHz	5825MHz
	Maximum power (dBm)	11.5	16	11
	Maximum rated power(mW)	14.0	40.0	13.0
Edge 1	Separation distance(mm)	110.0	110.0	110.0
	exclusion threshold	695.0	696.0	662.0
	Testing required?	**No**	**No**	**No**
Edge 2	Separation distance(mm)	127.0	127.0	127.0
	exclusion threshold	865.0	866.0	832.0
	Testing required?	**No**	**No**	**No**
Edge 3	Separation distance(mm)	77.0	77.0	77.0
	exclusion threshold	365.0	366.0	332.0
	Testing required?	**No**	**No**	**No**

14. SAR Test Results

General Note:

1. Per KDB 447498 D01v05r02, the reported SAR is the measured SAR value adjusted for maximum tune-up tolerance.
   a. Tune-up scaling Factor = tune-up limit power (mW) / EUT RF power (mW), where tune-up limit is the maximum rated power among all production units.
   b. For SAR testing of WLAN signal with non-100% duty cycle, the measured SAR is scaled-up by the duty cycle scaling factor which is equal to "1/(duty cycle)"
   c. For Bluetooth: Reported SAR(W/kg)= Measured SAR(W/kg)*Tune-up Scaling Factor
   d. For WLAN: Reported SAR(W/kg)= Measured SAR(W/kg)* Duty Cycle scaling factor * Tune-up scaling factor
2. Per KDB 447498 D01v05r02, for each exposure position, testing of other required channels within the operating mode of a frequency band is not required when the *reported* 1-g or 10-g SAR for the mid-band or highest output power channel is:
   - ≤ 0.8 W/kg or 2.0 W/kg, for 1-g or 10-g respectively, when the transmission band is ≤ 100 MHz
   - ≤ 0.6 W/kg or 1.5 W/kg, for 1-g or 10-g respectively, when the transmission band is between 100 MHz and 200 MHz
   - ≤ 0.4 W/kg or 1.0 W/kg, for 1-g or 10-g respectively, when the transmission band is ≥ 200 MHz
3. Per KDB 248227 D01v02r01, for 2.4GHz 802.11g/n SAR testing is not required when the highest reported SAR for DSSS is adjusted by the ratio of OFDM to DSSS specified maximum output power and the adjusted SAR is ≤ 1.2 W/kg.
4. Per KDB 248227 D01v02r01, for U-NII-1 Body SAR testing is not required when the U-NII-2A band highest reported SAR for a test configuration is ≤ 1.2 W/kg, SAR is not required for U-NII-1 band.
5. When the reported SAR of the test position is > 0.4 W/kg, SAR is repeated for the 802.11 transmission mode configuration tested in the initial test position to measure the subsequent next closet/smallest test separation distance and maximum coupling test position on the highest maximum output power channel, until the report SAR is ≤ 0.8 W/kg or all required test position are tested.
6. For all positions / configurations, when the reported SAR is > 0.8 W/kg, SAR is measured for these test positions / configurations on the subsequent next highest measured output power channel(s) until the reported SAR is ≤ 1.2 W/kg or all required channels are tested.
7. During SAR testing the WLAN transmission was verified using a spectrum analyzer.

14.1 Body SAR

<DTS WLAN SAR>

Plot No.	Band	Mode	Test Position	Gap (mm)	Ch.	Freq. (MHz)	Average Power (dBm)	Tune-Up Limit (dBm)	Tune-up Scaling Factor	Duty Cycle %	Duty Cycle Scaling Factor	Power Drift (dB)	Measured 1g SAR (W/kg)	Reported 1g SAR (W/kg)
	WLAN 2.4GHz	802.11b 1Mbps	Bottom Face	0	6	2437	15.81	16.00	1.044	97.64	1.024	0.09	1.24	1.325
	WLAN 2.4GHz	802.11b 1Mbps	Edge 4	0	6	2437	15.81	16.00	1.044	97.64	1.024	0.09	0.851	0.910
	WLAN 2.4GHz	802.11b 1Mbps	Bottom Face	0	1	2412	15.28	16.00	1.179	97.64	1.024	0.09	1.17	1.413
01	**WLAN 2.4GHz**	**802.11b 1Mbps**	**Bottom Face**	**0**	**11**	**2462**	**14.98**	**15.50**	**1.126**	**97.64**	**1.024**	**0.02**	**1.23**	**1.419**
	WLAN 2.4GHz	802.11b 1Mbps	Edge 4	0	1	2412	15.28	16.00	1.179	97.64	1.024	0.04	0.841	1.016
	WLAN 2.4GHz	802.11b 1Mbps	Edge 4	0	11	2462	14.98	15.50	1.126	97.64	1.024	0.16	0.737	0.850

<UNII WLAN SAR>

Plot No.	Band	Mode	Test Position	Gap (mm)	Ch.	Freq. (MHz)	Average Power (dBm)	Tune-Up Limit (dBm)	Tune-up Scaling Factor	Duty Cycle %	Duty Cycle Scaling Factor	Power Drift (dB)	Measured 1g SAR (W/kg)	Reported 1g SAR (W/kg)
	WLAN 5.3GHz	802.11n-HT20 MCS0	Bottom Face	0	52	5260	10.48	11.00	1.127	86.47	1.156	-0.04	0.479	0.624
	WLAN 5.3GHz	802.11n-HT20 MCS0	Edge 4	0	52	5260	10.48	11.00	1.127	86.47	1.156	-0.08	0.162	0.211
02	**WLAN 5.3GHz**	**802.11n-HT20 MCS0**	**Bottom Face**	**0**	**56**	**5280**	**9.93**	**11.00**	**1.279**	**86.47**	**1.156**	**0.02**	**0.466**	**0.689**
	WLAN 5.3GHz	802.11n-HT20 MCS0	Bottom Face	0	64	5320	10.06	11.00	1.241	86.47	1.156	-0.01	0.457	0.656
03	**WLAN 5.5GHz**	**802.11a 6Mbps**	**Bottom Face**	**0**	**100**	**5500**	**10.23**	**11.00**	**1.193**	**87.2**	**1.147**	**0.08**	**0.933**	**1.276**
	WLAN 5.5GHz	802.11a 6Mbps	Edge 4	0	100	5500	10.23	11.00	1.193	87.2	1.147	0.02	0.241	0.330
	WLAN 5.5GHz	802.11a 6Mbps	Bottom Face	0	116	5580	8.78	9.50	1.179	87.2	1.147	0.09	0.65	0.879
	WLAN 5.5GHz	802.11a 6Mbps	Bottom Face	0	132	5660	8.93	9.50	1.139	87.2	1.147	-0.09	0.566	0.739
	WLAN 5.5GHz	802.11a 6Mbps	Bottom Face	0	140	5700	8.74	9.50	1.190	87.2	1.147	-0.01	0.394	0.538
04	**WLAN 5.8GHz**	**802.11a MCS0**	**Bottom Face**	**0**	**157**	**5785**	**10.47**	**11.00**	**1.129**	**87.2**	**1.147**	**-0.08**	**0.609**	**0.788**
	WLAN 5.8GHz	802.11a MCS0	Edge 4	0	157	5785	10.47	11.00	1.129	87.2	1.147	0.05	0.296	0.383
	WLAN 5.8GHz	802.11a MCS0	Bottom Face	0	149	5745	10.07	10.50	1.103	87.2	1.147	0.09	0.594	0.751
	WLAN 5.8GHz	802.11a MCS0	Bottom Face	0	165	5825	9.89	10.50	1.151	87.2	1.147	0.08	0.494	0.652

< Bluetooth SAR>

Plot No.	Band	Mode	Test Position	Gap (mm)	Ch.	Freq. (MHz)	Average Power (dBm)	Tune-Up Limit (dBm)	Tune-up Scaling Factor	Power Drift (dB)	Measured 1g SAR (W/kg)	Reported 1g SAR (W/kg)
	Bluetooth	1Mbps	Bottom Face	0	78	2480	11.16	11.50	1.081	0.08	0.562	0.607
	Bluetooth	1Mbps	Edge 4	0	78	2480	11.16	11.50	1.081	-0.05	0.342	0.370
05	**Bluetooth**	**1Mbps**	**Bottom Face**	**0**	**0**	**2402**	**10.31**	**11.00**	**1.172**	**0.06**	**0.531**	**0.622**
	Bluetooth	1Mbps	Bottom Face	0	39	2441	11.13	11.50	1.088	0.04	0.544	0.592

14.2 Repeated SAR Measurement

No.	Band	Mode	Test Position	Gap (mm)	Ch.	Freq. (MHz)	Average Power (dBm)	Tune-Up Limit (dBm)	Tune-up Scaling Factor	Duty Cycle %	Duty Cycle Scaling Factor	Power Drift (dB)	Measured 1g SAR (W/kg)	Ratio	Reported 1g SAR (W/kg)
1st	WLAN2.4GHz	802.11b 1Mbps	Bottom Face	0	6	2437	15.81	16.00	1.044	97.64	1.024	0.09	1.24	1	1.325
2nd	WLAN2.4GHz	802.11b 1Mbps	Bottom Face	0	6	2437	15.81	16.00	1.044	97.64	1.024	0.08	1.2	1.033	1.283
1st	WLAN 5.5GHz	802.11a 6Mbps	Bottom Face	0	100	5500	10.23	11.00	1.193	87.2	1.147	0.08	0.933	1	1.276
2nd	WLAN 5.5GHz	802.11a 6Mbps	Bottom Face	0	100	5500	10.23	11.00	1.193	87.2	1.147	-0.03	0.851	1.096	1.164

General Note:

1. Per KDB 865664 D01v01r03, for each frequency band, repeated SAR measurement is required only when the measured SAR is ≥0.8W/kg
2. Per KDB 865664 D01v01r03, if the ratio among the repeated measurement is ≤ 1.2 and the measured SAR <1.45W/kg, only one repeated measurement is required.
3. The ratio is the difference in percentage between original and repeated *measured SAR*.
4. All measurement SAR result is scaled-up to account for tune-up tolerance and is compliant.

15. Simultaneous Transmission Analysis

No.	Simultaneous Transmission Configurations
1.	None

General Note:

1. WLAN and Bluetooth share the same antenna, and cannot transmit simultaneously.
2. EUT will choose either WLAN 2.4GHz or WLAN 5GHz according to the network signal condition; therefore, 2.4GHz WLAN and 5GHz WLAN will not operate simultaneously at any moment.

Test Engineer： Luke Lu

16. Uncertainty Assessment

The component of uncertainly may generally be categorized according to the methods used to evaluate them. The evaluation of uncertainly by the statistical analysis of a series of observations is termed a Type An evaluation of uncertainty. The evaluation of uncertainty by means other than the statistical analysis of a series of observation is termed a Type B evaluation of uncertainty. Each component of uncertainty, however evaluated, is represented by an estimated standard deviation, termed standard uncertainty, which is determined by the positive square root of the estimated variance.

A Type A evaluation of standard uncertainty may be based on any valid statistical method for treating data. This includes calculating the standard deviation of the mean of a series of independent observations; using the method of least squares to fit a curve to the data in order to estimate the parameter of the curve and their standard deviations; or carrying out an analysis of variance in order to identify and quantify random effects in certain kinds of measurement.

A type B evaluation of standard uncertainty is typically based on scientific judgment using all of the relevant information available. These may include previous measurement data, experience, and knowledge of the behavior and properties of relevant materials and instruments, manufacture's specification, data provided in calibration reports and uncertainties assigned to reference data taken from handbooks. Broadly speaking, the uncertainty is either obtained from an outdoor source or obtained from an assumed distribution, such as the normal distribution, rectangular or triangular distributions indicated in table below.

Uncertainty Distributions	Normal	Rectangular	Triangular	U-Shape
Multi-plying Factor[(a)]	1/k[(b)]	1/√3	1/√6	1/√2

(a) standard uncertainty is determined as the product of the multiplying factor and the estimated range of variations in the measured quantity

(b) κ is the coverage factor

Table 16.1. Standard Uncertainty for Assumed Distribution

The combined standard uncertainty of the measurement result represents the estimated standard deviation of the result. It is obtained by combining the individual standard uncertainties of both Type A and Type B evaluation using the usual "root-sum-squares" (RSS) methods of combining standard deviations by taking the positive square root of the estimated variances.

Expanded uncertainty is a measure of uncertainty that defines an interval about the measurement result within which the measured value is confidently believed to lie. It is obtained by multiplying the combined standard uncertainty by a coverage factor. Typically, the coverage factor ranges from 2 to 3. Using a coverage factor allows the true value of a measured quantity to be specified with a defined probability within the specified uncertainty range. For purpose of this document, a coverage factor two is used, which corresponds to confidence interval of about 95 %. The DASY uncertainty Budget is shown in the following tables.

Error Description	Uncertainty Value (±%)	Probability Distribution	Divisor	Ci (1g)	Ci (10g)	Standard Uncertainty (1g)	Standard Uncertainty (10g)
Measurement System							
Probe Calibration	6.0	Normal	1	1	1	± 6.0 %	± 6.0 %
Axial Isotropy	4.7	Rectangular	√3	0.7	0.7	± 1.9 %	± 1.9 %
Hemispherical Isotropy	9.6	Rectangular	√3	0.7	0.7	± 3.9 %	± 3.9 %
Boundary Effects	1.0	Rectangular	√3	1	1	± 0.6 %	± 0.6 %
Linearity	4.7	Rectangular	√3	1	1	± 2.7 %	± 2.7 %
System Detection Limits	1.0	Rectangular	√3	1	1	± 0.6 %	± 0.6 %
Readout Electronics	0.3	Normal	1	1	1	± 0.3 %	± 0.3 %
Response Time	0.8	Rectangular	√3	1	1	± 0.5 %	± 0.5 %
Integration Time	2.6	Rectangular	√3	1	1	± 1.5 %	± 1.5 %
RF Ambient Noise	3.0	Rectangular	√3	1	1	± 1.7 %	± 1.7 %
RF Ambient Reflections	3.0	Rectangular	√3	1	1	± 1.7 %	± 1.7 %
Probe Positioner	0.4	Rectangular	√3	1	1	± 0.2 %	± 0.2 %
Probe Positioning	2.9	Rectangular	√3	1	1	± 1.7 %	± 1.7 %
Max. SAR Eval.	1.0	Rectangular	√3	1	1	± 0.6 %	± 0.6 %
Test Sample Related							
Device Positioning	2.9	Normal	1	1	1	± 2.9 %	± 2.9 %
Device Holder	3.6	Normal	1	1	1	± 3.6 %	± 3.6 %
Power Drift	5.0	Rectangular	√3	1	1	± 2.9 %	± 2.9 %
Phantom and Setup							
Phantom Uncertainty	4.0	Rectangular	√3	1	1	± 2.3 %	± 2.3 %
Liquid Conductivity (Target)	5.0	Rectangular	√3	0.64	0.43	± 1.8 %	± 1.2 %
Liquid Conductivity (Meas.)	2.5	Normal	1	0.64	0.43	± 1.6 %	± 1.1 %
Liquid Permittivity (Target)	5.0	Rectangular	√3	0.6	0.49	± 1.7 %	± 1.4 %
Liquid Permittivity (Meas.)	2.5	Normal	1	0.6	0.49	± 1.5 %	± 1.2 %
Combined Standard Uncertainty						± 11.0 %	± 10.8 %
Coverage Factor for 95 %						K=2	
Expanded Uncertainty						**± 22.0 %**	**± 21.5 %**

Table 16.2. Uncertainty Budget for frequency range 300 MHz to 3 GHz

Error Description	Uncertainty Value (±%)	Probability Distribution	Divisor	Ci (1g)	Ci (10g)	Standard Uncertainty (1g)	Standard Uncertainty (10g)
Measurement System							
Probe Calibration	6.55	Normal	1	1	1	± 6.55 %	± 6.55 %
Axial Isotropy	4.7	Rectangular	√3	0.7	0.7	± 1.9 %	± 1.9 %
Hemispherical Isotropy	9.6	Rectangular	√3	0.7	0.7	± 3.9 %	± 3.9 %
Boundary Effects	2.0	Rectangular	√3	1	1	± 1.2 %	± 1.2 %
Linearity	4.7	Rectangular	√3	1	1	± 2.7 %	± 2.7 %
System Detection Limits	1.0	Rectangular	√3	1	1	± 0.6 %	± 0.6 %
Readout Electronics	0.3	Normal	1	1	1	± 0.3 %	± 0.3 %
Response Time	0.8	Rectangular	√3	1	1	± 0.5 %	± 0.5 %
Integration Time	2.6	Rectangular	√3	1	1	± 1.5 %	± 1.5 %
RF Ambient Noise	3.0	Rectangular	√3	1	1	± 1.7 %	± 1.7 %
RF Ambient Reflections	3.0	Rectangular	√3	1	1	± 1.7 %	± 1.7 %
Probe Positioner	0.8	Rectangular	√3	1	1	± 0.5 %	± 0.5 %
Probe Positioning	6.7	Rectangular	√3	1	1	± 3.9 %	± 3.9 %
Max. SAR Eval.	4.0	Rectangular	√3	1	1	± 2.3 %	± 2.3 %
Test Sample Related							
Device Positioning	2.9	Normal	1	1	1	± 2.9 %	± 2.9 %
Device Holder	3.6	Normal	1	1	1	± 3.6 %	± 3.6 %
Power Drift	5.0	Rectangular	√3	1	1	± 2.9 %	± 2.9 %
Phantom and Setup							
Phantom Uncertainty	4.0	Rectangular	√3	1	1	± 2.3 %	± 2.3 %
Liquid Conductivity (Target)	5.0	Rectangular	√3	0.64	0.43	± 1.8 %	± 1.2 %
Liquid Conductivity (Meas.)	2.5	Rectangular	√3	0.64	0.43	± 0.9 %	± 0.6 %
Liquid Permittivity (Target)	5.0	Rectangular	√3	0.6	0.49	± 1.7 %	± 1.4 %
Liquid Permittivity (Meas.)	2.5	Rectangular	√3	0.6	0.49	± 0.9 %	± 0.6 %
Combined Standard Uncertainty						± 12.0 %	± 11.8 %
Coverage Factor for 95 %						K=2	
Expanded Uncertainty						**± 24.0 %**	**± 23.7 %**

Table 16.3 Uncertainty Budget for frequency range 3 GHz to 6 GHz

17. References

[1] FCC 47 CFR Part 2 “Frequency Allocations and Radio Treaty Matters; General Rules and Regulations”

[2] ANSI/IEEE Std. C95.1-1992, “IEEE Standard for Safety Levels with Respect to Human Exposure to Radio Frequency Electromagnetic Fields, 3 kHz to 300 GHz”, September 1992

[3] IEEE Std. 1528-2003, “Recommended Practice for Determining the Peak Spatial-Average Specific Absorption Rate (SAR) in the Human Head from Wireless Communications Devices: Measurement Techniques”, December 2003

[4] SPEAG DASY System Handbook

[5] FCC KDB 248227 D01 v02r01, “SAR Guidance for IEEE 802.11 (WiFi) Transmitters”, Jun 2015.

[6] FCC KDB 447498 D01 v05r02, “Mobile and Portable Device RF Exposure Procedures and Equipment Authorization Policies”, Feb 2014

[7] FCC KDB 616217 D04 v01r01, “SAR Evaluation Considerations for Laptop, Notebook, Netbook and Tablet Computers”, May 2013

[8] FCC KDB 865664 D01 v01r03, "SAR Measurement Requirements for 100 MHz to 6 GHz", Feb 2014.

[9] FCC KDB 865664 D02 v01r01, “RF Exposure Compliance Reporting and Documentation Considerations” May 2013.

Appendix A. Plots of System Performance Check

The plots are shown as follows.

System Check_Body_2450MHz_150728

DUT: Dipole 2450 MHz

Communication System: UID 0, CW; Frequency: 2450 MHz;Duty Cycle: 1:1
Medium: MSL_2450_150728 Medium parameters used: f = 2450 MHz; σ = 1.992 S/m; ε_r = 52.291; ρ = 1000 kg/m^3
Ambient Temperature: 23.3 ℃ ; **Liquid Temperature**: 22.8 ℃

DASY5 Configuration:
- Probe: EX3DV4 - SN3819; ConvF(6.95, 6.95, 6.95); Calibrated: 2014.11.13;
- Sensor-Surface: 2mm (Mechanical Surface Detection)
- Electronics: DAE4 Sn1303; Calibrated: 2014.12.11
- Phantom: SAM3; Type: QDOVA002AA; Serial: TP:1149
- Measurement SW: DASY52, Version 52.8 (8);SEMCAD X Version 14.6.10 (7331)

Pin=250mW/Area Scan (81x81x1): Interpolated grid: dx=12mm, dy=12mm
Maximum value of SAR (interpolated) = 22.4 W/kg

Pin=250mW/Zoom Scan (7x7x7)/Cube 0: Measurement grid: dx=5mm, dy=5mm, dz=5mm
Reference Value = 91.09 V/m; Power Drift = 0.01 dB
Peak SAR (extrapolated) = 30.4 W/kg
SAR(1 g) = 13.5 W/kg; SAR(10 g) = 6.11 W/kg
Maximum value of SAR (measured) = 22.4 W/kg

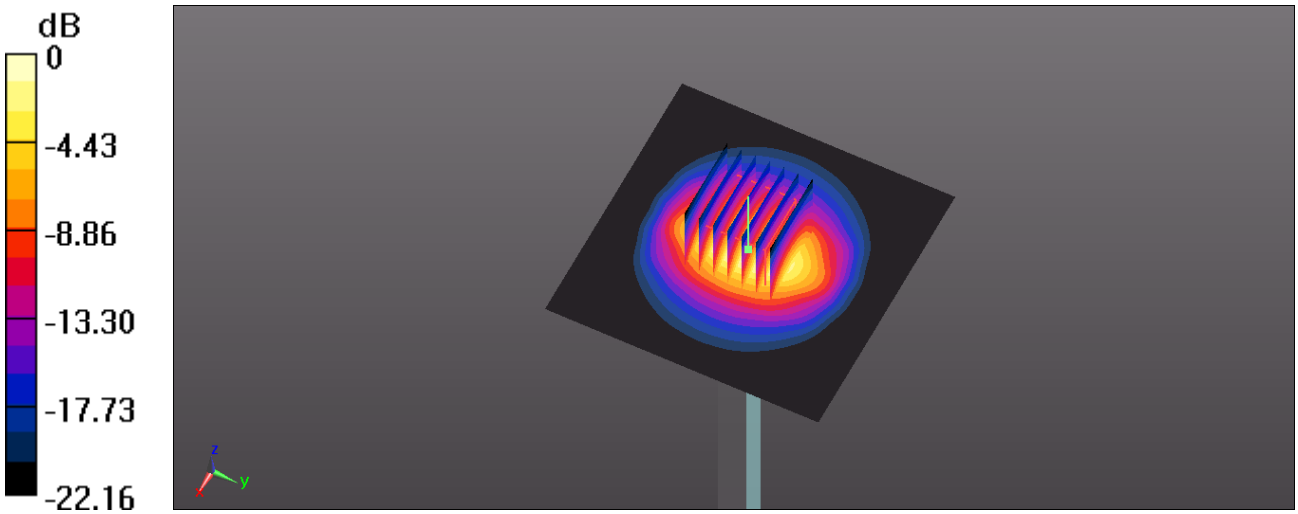

0 dB = 22.4 W/kg

Test Laboratory:Sporton International Inc SAR Testing Lab Date: 2015.07.29

System Check_Body_5300MHz_150729

DUT: Dipole 5GHz

Communication System: UID 0, CW (0); Frequency: 5300 MHz;Duty Cycle: 1:1
Medium: MSL_5300_150729 Medium parameters used: f = 5300 MHz; σ = 5.251 S/m; ε_r = 47.988; ρ = 1000 kg/m^3
Ambient Temperature: 23.3 ℃ ; **Liquid Temperature**: 22.9 ℃

DASY5 Configuration:
- Probe: EX3DV4 - SN3819; ConvF(4.37, 4.37, 4.37); Calibrated: 2014.11.13;
- Sensor-Surface: 1.4mm (Mechanical Surface Detection)
- Electronics: DAE4 Sn1303; Calibrated: 2014.12.11
- Phantom: SAM3; Type: QDOVA002AA; Serial: TP:1149
- Measurement SW: DASY52, Version 52.8 (8);SEMCAD X Version 14.6.10 (7331)

Pin=100mW/Area Scan (71x71x1): Interpolated grid: dx=10mm, dy=10mm
Maximum value of SAR (interpolated) = 20.9 W/kg

Pin=100mW/Zoom Scan (7x7x7)/Cube 0: Measurement grid: dx=4mm, dy=4mm, dz=1.4mm
Reference Value = 49.80 V/m; Power Drift = -0.10 dB
Peak SAR (extrapolated) = 34.3 W/kg
SAR(1 g) = 8.24 W/kg; SAR(10 g) = 2.24 W/kg
Maximum value of SAR (measured) = 20.2 W/kg

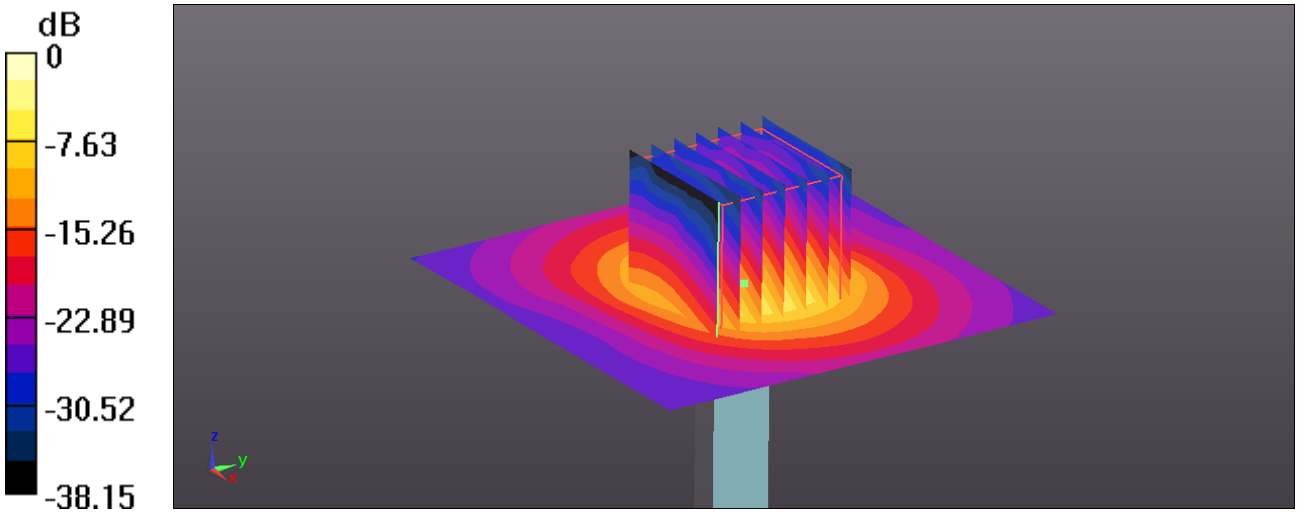

0 dB = 20.9 W/kg

Test Laboratory:Sporton International Inc SAR Testing Lab Date: 2015.07.30

System Check_Body_5600MHz_150730

DUT: Dipole 5GHz

Communication System: UID 0, CW (0); Frequency: 5600 MHz;Duty Cycle: 1:1
Medium: MSL_5600_150730 Medium parameters used: f = 5600 MHz; σ = 5.644 S/m; ε_r = 47.452; ρ = 1000 kg/m^3
Ambient Temperature: 23.3 ℃ ; **Liquid Temperature**: 22.8 ℃

DASY5 Configuration:
- Probe: EX3DV4 - SN3819; ConvF(3.86, 3.86, 3.86); Calibrated: 2014.11.13;
- Sensor-Surface: 1.4mm (Mechanical Surface Detection)
- Electronics: DAE4 Sn1303; Calibrated: 2014.12.11
- Phantom: SAM3; Type: QDOVA002AA; Serial: TP:1149
- Measurement SW: DASY52, Version 52.8 (8);SEMCAD X Version 14.6.10 (7331)

Pin=100mW/Area Scan (71x71x1): Interpolated grid: dx=10mm, dy=10mm
Maximum value of SAR (interpolated) = 25.3 W/kg

Pin=100mW/Zoom Scan (7x7x7)/Cube 0: Measurement grid: dx=4mm, dy=4mm, dz=1.4mm
Reference Value = 52.89 V/m; Power Drift = -0.01 dB
Peak SAR (extrapolated) = 44.5 W/kg
SAR(1 g) = 8.5 W/kg; SAR(10 g) = 2.55 W/kg
Maximum value of SAR (measured) = 25.1 W/kg

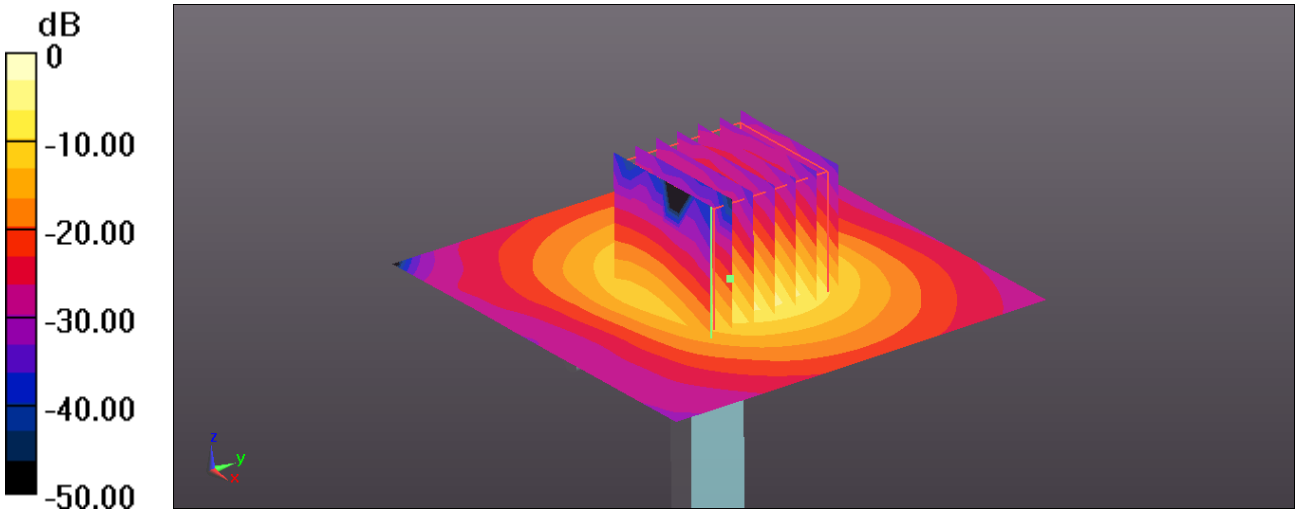

0 dB = 25.3 W/kg

Test Laboratory:Sporton International Inc SAR Testing Lab Date: 2015.07.30

System Check_Body_5800MHz_150730

DUT: Dipole 5GHz

Communication System: UID 0, CW; Frequency: 5800 MHz;Duty Cycle: 1:1
Medium: MSL_5800_150730 Medium parameters used: f = 5800 MHz; σ = 5.868 S/m; ε_r = 46.994; ρ = 1000 kg/m^3
Ambient Temperature: 23.3 ℃ ; **Liquid Temperature**: 22.6 ℃

DASY5 Configuration:
- Probe: EX3DV4 - SN3819; ConvF(4.07, 4.07, 4.07); Calibrated: 2014.11.13;
- Sensor-Surface: 1.4mm (Mechanical Surface Detection)
- Electronics: DAE4 Sn1303; Calibrated: 2014.12.11
- Phantom: SAM3; Type: QDOVA002AA; Serial: TP:1149
- Measurement SW: DASY52, Version 52.8 (8);SEMCAD X Version 14.6.10 (7331)

Pin=100mW/Area Scan (71x71x1): Interpolated grid: dx=10mm, dy=10mm
Maximum value of SAR (interpolated) = 19.9 W/kg

Pin=100mW/Zoom Scan (7x7x7)/Cube 0: Measurement grid: dx=4mm, dy=4mm, dz=1.4mm
Reference Value = 46.64 V/m; Power Drift = 0.09 dB
Peak SAR (extrapolated) = 34.6 W/kg
SAR(1 g) = 7.89 W/kg; SAR(10 g) = 2.16 W/kg
Maximum value of SAR (measured) = 20.1 W/kg

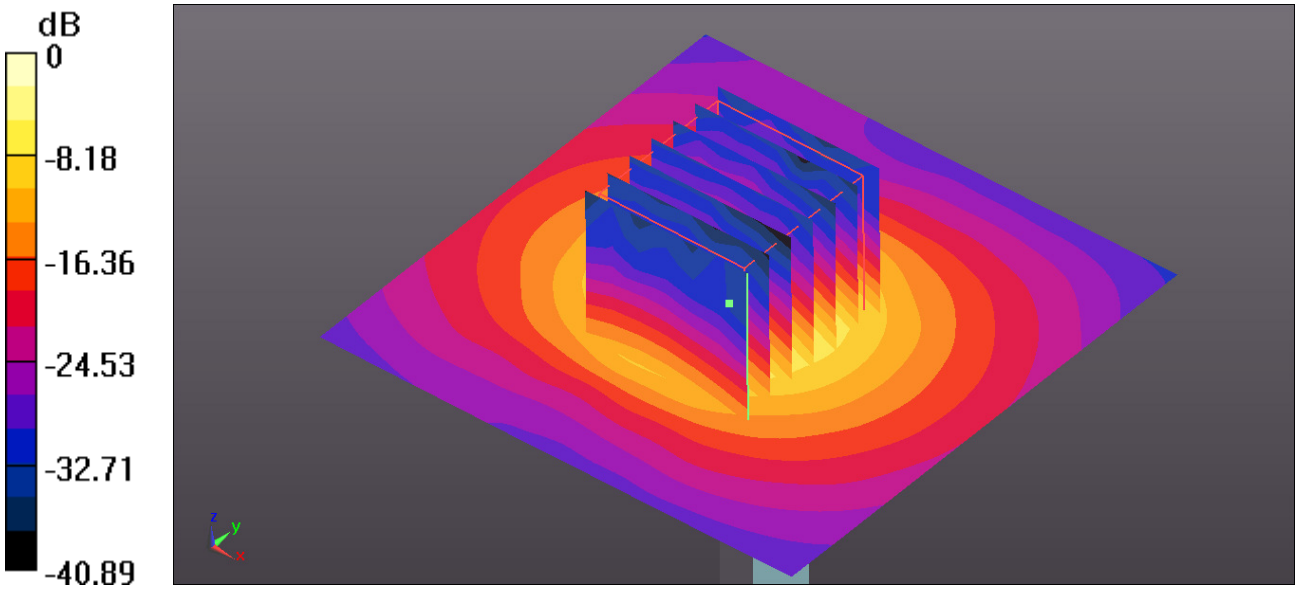

0 dB = 19.9 W/kg

Appendix B. Plots of High SAR Measurement

The plots are shown as follows.

0

02_WLAN5G Band 2_802.11n-HT20 MCS0_Bottom Face_0mm_Ch56

Communication System: UID 0, WIFI (0); Frequency: 5280 MHz;Duty Cycle: 1:1.156
Medium: MSL_5300_150729 Medium parameters used: f = 5280 MHz; σ = 5.245 S/m; ε_r = 48.075; ρ = 1000 kg/m^3
Ambient Temperature: 23.3 ℃ ; **Liquid Temperature**: 22.9 ℃

DASY5 Configuration:
- Probe: EX3DV4 - SN3819; ConvF(4.37, 4.37, 4.37); Calibrated: 2014.11.13;
- Sensor-Surface: 1.4mm (Mechanical Surface Detection)
- Electronics: DAE4 Sn1303; Calibrated: 2014.12.11
- Phantom: SAM3; Type: QDOVA002AA; Serial: TP:1149
- Measurement SW: DASY52, Version 52.8 (8);SEMCAD X Version 14.6.10 (7331)

Ch56/Area Scan (71x181x1): Interpolated grid: dx=10mm, dy=10mm
Maximum value of SAR (interpolated) = 1.50 W/kg

Ch56/Zoom Scan (7x7x7)/Cube 0: Measurement grid: dx=4mm, dy=4mm, dz=1.4mm
Reference Value = 1.626 V/m; Power Drift = 0.02 dB
Peak SAR (extrapolated) = 3.67 W/kg
SAR(1 g) = 0.466 W/kg; SAR(10 g) = 0.116 W/kg
Maximum value of SAR (measured) = 1.48 W/kg

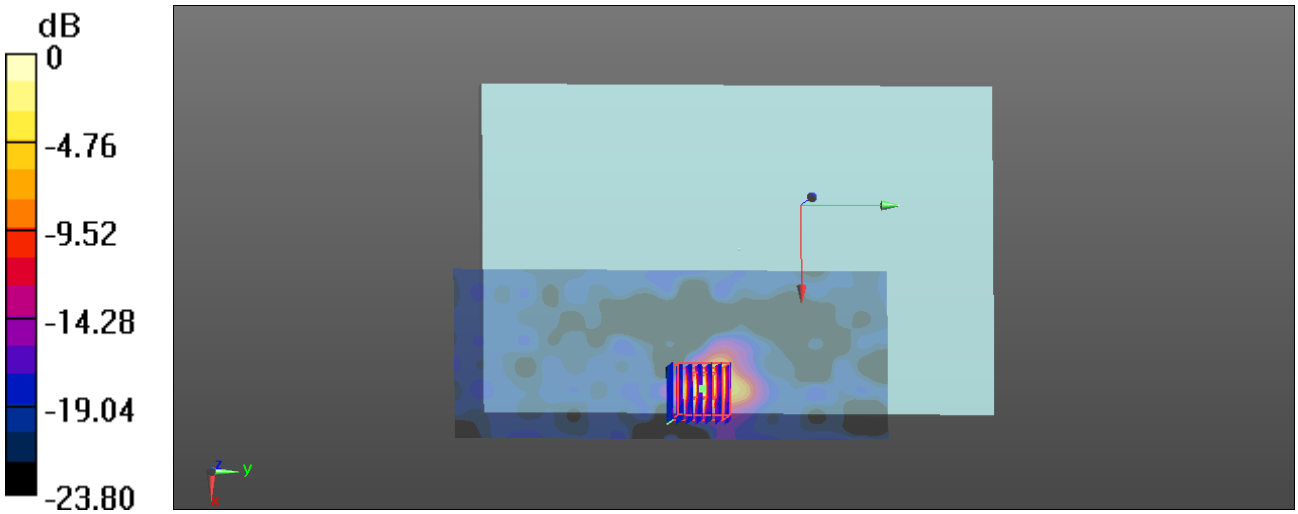

0 dB = 1.50 W/kg

Appendix C. DASY Calibration Certificate

The DASY calibration certificates are shown as follows.

Calibration Laboratory of
Schmid & Partner
Engineering AG
Zeughausstrasse 43, 8004 Zurich, Switzerland

S Schweizerischer Kalibrierdienst
C Service suisse d'étalonnage
Servizio svizzero di taratura
S Swiss Calibration Service

Accredited by the Swiss Accreditation Service (SAS)
The Swiss Accreditation Service is one of the signatories to the EA Multilateral Agreement for the recognition of calibration certificates

Accreditation No.: SCS 108

Client Sporton-CN (Auden)

Certificate No: D2450V2-840_Nov14

CALIBRATION CERTIFICATE

Object	D2450V2 - SN: 840
Calibration procedure(s)	QA CAL-05.v9 Calibration procedure for dipole validation kits above 700 MHz
Calibration date:	November 19, 2014

This calibration certificate documents the traceability to national standards, which realize the physical units of measurements (SI).
The measurements and the uncertainties with confidence probability are given on the following pages and are part of the certificate.

All calibrations have been conducted in the closed laboratory facility: environment temperature (22 ± 3)°C and humidity < 70%.

Calibration Equipment used (M&TE critical for calibration)

Primary Standards	ID #	Cal Date (Certificate No.)	Scheduled Calibration
Power meter EPM-442A	GB37480704	07-Oct-14 (No. 217-02020)	Oct-15
Power sensor HP 8481A	US37292783	07-Oct-14 (No. 217-02020)	Oct-15
Power sensor HP 8481A	MY41092317	07-Oct-14 (No. 217-02021)	Oct-15
Reference 20 dB Attenuator	SN: 5058 (20k)	03-Apr-14 (No. 217-01918)	Apr-15
Type-N mismatch combination	SN: 5047.2 / 06327	03-Apr-14 (No. 217-01921)	Apr-15
Reference Probe ES3DV3	SN: 3205	30-Dec-13 (No. ES3-3205_Dec13)	Dec-14
DAE4	SN: 601	18-Aug-14 (No. DAE4-601_Aug14)	Aug-15

Secondary Standards	ID #	Check Date (in house)	Scheduled Check
RF generator R&S SMT-06	100005	04-Aug-99 (in house check Oct-13)	In house check: Oct-16
Network Analyzer HP 8753E	US37390585 S4206	18-Oct-01 (in house check Oct-14)	In house check: Oct-15

	Name	Function	Signature
Calibrated by:	Jeton Kastrati	Laboratory Technician	
Approved by:	Katja Pokovic	Technical Manager	

Issued: November 20, 2014

This calibration certificate shall not be reproduced except in full without written approval of the laboratory.

Glossary:

TSL	tissue simulating liquid
ConvF	sensitivity in TSL / NORM x,y,z
N/A	not applicable or not measured

Calibration is Performed According to the Following Standards:

a) IEEE Std 1528-2013, "IEEE Recommended Practice for Determining the Peak Spatial-Averaged Specific Absorption Rate (SAR) in the Human Head from Wireless Communications Devices: Measurement Techniques", June 2013
b) IEC 62209-1, "Procedure to measure the Specific Absorption Rate (SAR) for hand-held devices used in close proximity to the ear (frequency range of 300 MHz to 3 GHz)", February 2005
c) KDB 865664, "SAR Measurement Requirements for 100 MHz to 6 GHz"

Additional Documentation:

d) DASY4/5 System Handbook

Methods Applied and Interpretation of Parameters:

- *Measurement Conditions:* Further details are available from the Validation Report at the end of the certificate. All figures stated in the certificate are valid at the frequency indicated.
- *Antenna Parameters with TSL:* The dipole is mounted with the spacer to position its feed point exactly below the center marking of the flat phantom section, with the arms oriented parallel to the body axis.
- *Feed Point Impedance and Return Loss:* These parameters are measured with the dipole positioned under the liquid filled phantom. The impedance stated is transformed from the measurement at the SMA connector to the feed point. The Return Loss ensures low reflected power. No uncertainty required.
- *Electrical Delay:* One-way delay between the SMA connector and the antenna feed point. No uncertainty required.
- *SAR measured:* SAR measured at the stated antenna input power.
- *SAR normalized:* SAR as measured, normalized to an input power of 1 W at the antenna connector.
- *SAR for nominal TSL parameters:* The measured TSL parameters are used to calculate the nominal SAR result.

The reported uncertainty of measurement is stated as the standard uncertainty of measurement multiplied by the coverage factor k=2, which for a normal distribution corresponds to a coverage probability of approximately 95%.

Measurement Conditions

DASY system configuration, as far as not given on page 1.

DASY Version	DASY5	V52.8.8
Extrapolation	Advanced Extrapolation	
Phantom	Modular Flat Phantom	
Distance Dipole Center - TSL	10 mm	with Spacer
Zoom Scan Resolution	dx, dy, dz = 5 mm	
Frequency	2450 MHz ± 1 MHz	

Head TSL parameters

The following parameters and calculations were applied.

	Temperature	**Permittivity**	**Conductivity**
Nominal Head TSL parameters	22.0 °C	39.2	1.80 mho/m
Measured Head TSL parameters	(22.0 ± 0.2) °C	39.0 ± 6 %	1.86 mho/m ± 6 %
Head TSL temperature change during test	< 0.5 °C	----	----

SAR result with Head TSL

SAR averaged over 1 cm^3 (1 g) of Head TSL	Condition	
SAR measured	250 mW input power	13.3 W/kg
SAR for nominal Head TSL parameters	normalized to 1W	**52.3 W/kg ± 17.0 % (k=2)**

SAR averaged over 10 cm^3 (10 g) of Head TSL	condition	
SAR measured	250 mW input power	6.21 W/kg
SAR for nominal Head TSL parameters	normalized to 1W	**24.6 W/kg ± 16.5 % (k=2)**

Body TSL parameters

The following parameters and calculations were applied.

	Temperature	**Permittivity**	**Conductivity**
Nominal Body TSL parameters	22.0 °C	52.7	1.95 mho/m
Measured Body TSL parameters	(22.0 ± 0.2) °C	50.9 ± 6 %	2.03 mho/m ± 6 %
Body TSL temperature change during test	< 0.5 °C	----	----

SAR result with Body TSL

SAR averaged over 1 cm^3 (1 g) of Body TSL	Condition	
SAR measured	250 mW input power	13.1 W/kg
SAR for nominal Body TSL parameters	normalized to 1W	**51.0 W/kg ± 17.0 % (k=2)**

SAR averaged over 10 cm^3 (10 g) of Body TSL	condition	
SAR measured	250 mW input power	6.00 W/kg
SAR for nominal Body TSL parameters	normalized to 1W	**23.6 W/kg ± 16.5 % (k=2)**

Appendix (Additional assessments outside the scope of SCS108)

Antenna Parameters with Head TSL

Impedance, transformed to feed point	54.7 Ω + 2.8 jΩ
Return Loss	- 25.6 dB

Antenna Parameters with Body TSL

Impedance, transformed to feed point	50.9 Ω + 4.4 jΩ
Return Loss	- 27.0 dB

General Antenna Parameters and Design

Electrical Delay (one direction)	1.162 ns

After long term use with 100W radiated power, only a slight warming of the dipole near the feedpoint can be measured.

The dipole is made of standard semirigid coaxial cable. The center conductor of the feeding line is directly connected to the second arm of the dipole. The antenna is therefore short-circuited for DC-signals. On some of the dipoles, small end caps are added to the dipole arms in order to improve matching when loaded according to the position as explained in the "Measurement Conditions" paragraph. The SAR data are not affected by this change. The overall dipole length is still according to the Standard.
No excessive force must be applied to the dipole arms, because they might bend or the soldered connections near the feedpoint may be damaged.

Additional EUT Data

Manufactured by	SPEAG
Manufactured on	July 20, 2009

DASY5 Validation Report for Head TSL

Date: 19.11.2014

Test Laboratory: SPEAG, Zurich, Switzerland

DUT: Dipole 2450 MHz; Type: D2450V2; Serial: D2450V2 - SN: 840

Communication System: UID 0 - CW; Frequency: 2450 MHz
Medium parameters used: f = 2450 MHz; σ = 1.86 S/m; ε_r = 39; ρ = 1000 kg/m^3
Phantom section: Flat Section
Measurement Standard: DASY5 (IEEE/IEC/ANSI C63.19-2011)

DASY52 Configuration:

- Probe: ES3DV3 - SN3205; ConvF(4.53, 4.53, 4.53); Calibrated: 30.12.2013;
- Sensor-Surface: 3mm (Mechanical Surface Detection)
- Electronics: DAE4 Sn601; Calibrated: 18.08.2014
- Phantom: Flat Phantom 5.0 (front); Type: QD000P50AA; Serial: 1001
- DASY52 52.8.8(1222); SEMCAD X 14.6.10(7331)

Dipole Calibration for Head Tissue/Pin=250 mW, d=10mm/Zoom Scan (7x7x7)/Cube 0:

Measurement grid: dx=5mm, dy=5mm, dz=5mm
Reference Value = 100.9 V/m; Power Drift = 0.02 dB
Peak SAR (extrapolated) = 27.3 W/kg
SAR(1 g) = 13.3 W/kg; SAR(10 g) = 6.21 W/kg
Maximum value of SAR (measured) = 17.5 W/kg

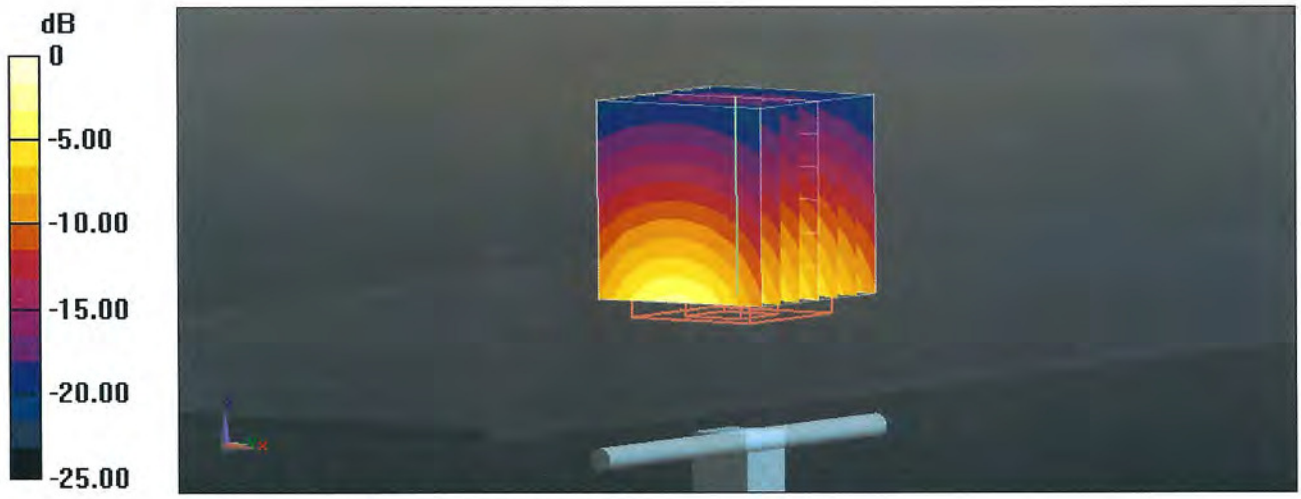

0 dB = 17.5 W/kg = 12.43 dBW/kg

Impedance Measurement Plot for Head TSL

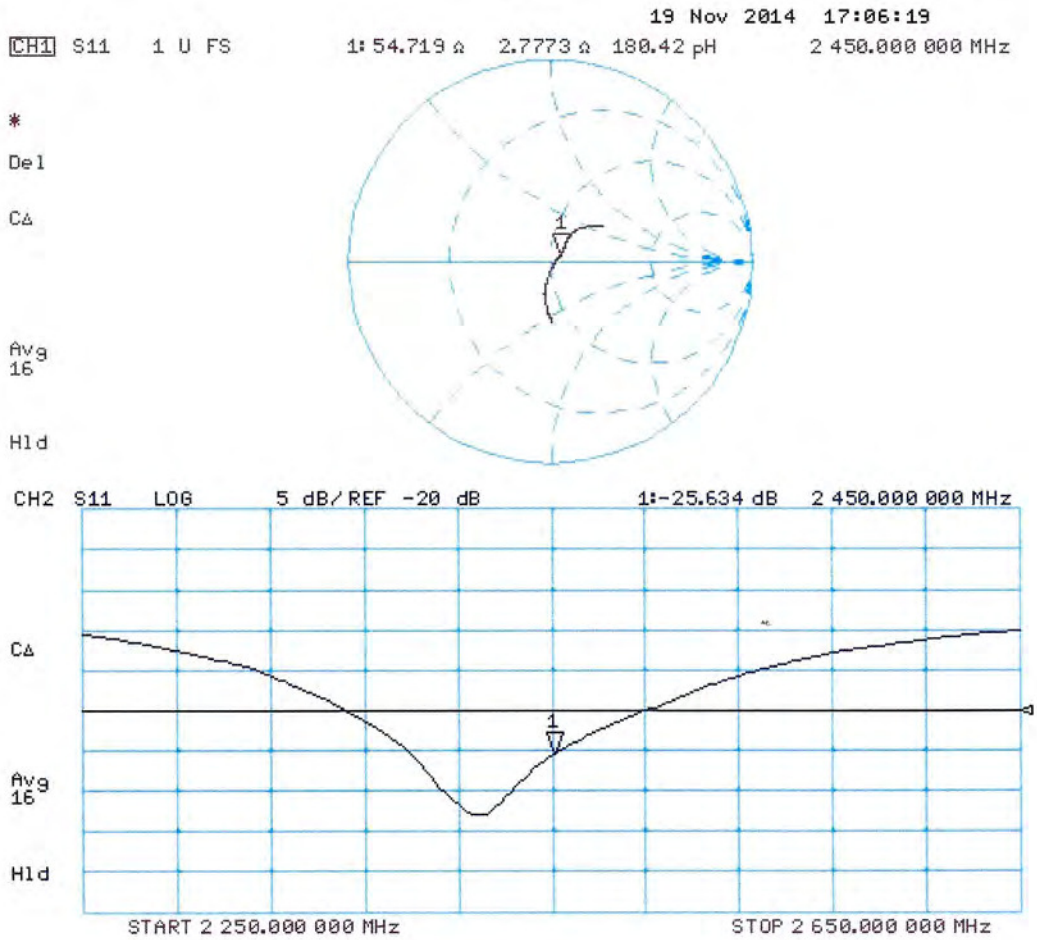

DASY5 Validation Report for Body TSL

Date: 19.11.2014

Test Laboratory: SPEAG, Zurich, Switzerland

DUT: Dipole 2450 MHz; Type: D2450V2; Serial: D2450V2 - SN: 840

Communication System: UID 0 - CW; Frequency: 2450 MHz
Medium parameters used: f = 2450 MHz; σ = 2.03 S/m; ε_r = 50.9; ρ = 1000 kg/m^3
Phantom section: Flat Section
Measurement Standard: DASY5 (IEEE/IEC/ANSI C63.19-2011)

DASY52 Configuration:

- Probe: ES3DV3 - SN3205; ConvF(4.35, 4.35, 4.35); Calibrated: 30.12.2013;
- Sensor-Surface: 3mm (Mechanical Surface Detection)
- Electronics: DAE4 Sn601; Calibrated: 18.08.2014
- Phantom: Flat Phantom 5.0 (back); Type: QD000P50AA; Serial: 1002
- DASY52 52.8.8(1222); SEMCAD X 14.6.10(7331)

Dipole Calibration for Body Tissue/Pin=250 mW, d=10mm/Zoom Scan (7x7x7)/Cube 0:

Measurement grid: dx=5mm, dy=5mm, dz=5mm
Reference Value = 95.80 V/m; Power Drift = -0.03 dB
Peak SAR (extrapolated) = 27.6 W/kg
SAR(1 g) = 13.1 W/kg; SAR(10 g) = 6 W/kg
Maximum value of SAR (measured) = 17.3 W/kg

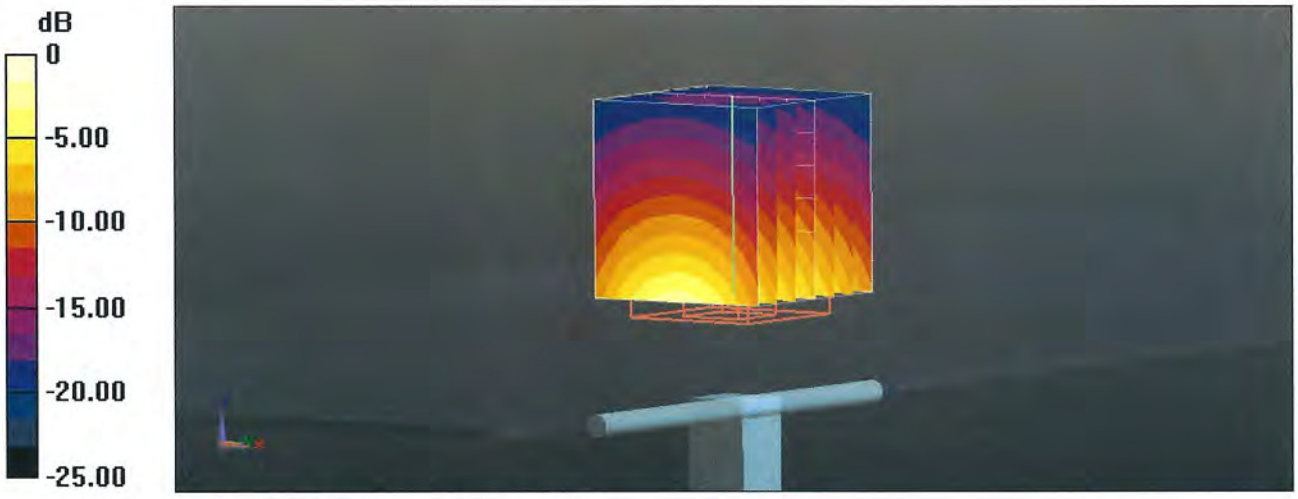

0 dB = 17.3 W/kg = 12.38 dBW/kg

Impedance Measurement Plot for Body TSL

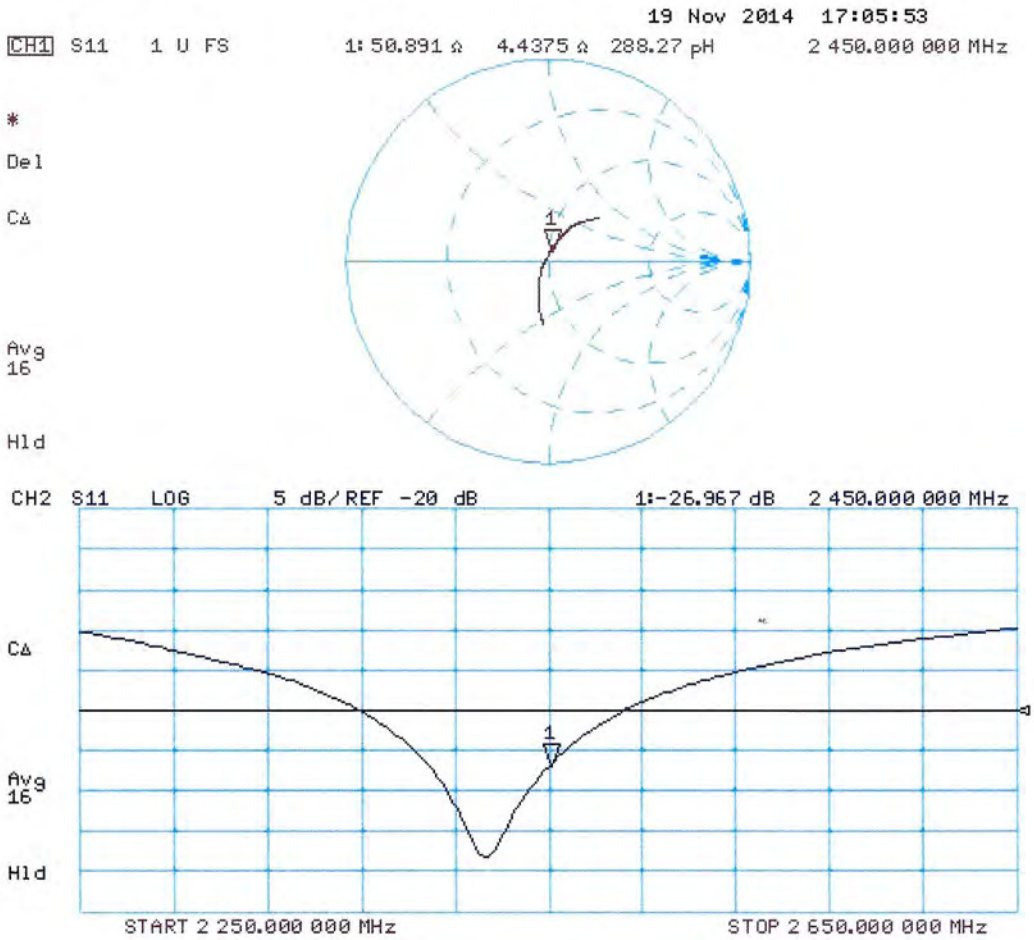

Calibration Laboratory of
Schmid & Partner
Engineering AG
Zeughausstrasse 43, 8004 Zurich, Switzerland

S Schweizerischer Kalibrierdienst
C Service suisse d'étalonnage
Servizio svizzero di taratura
S Swiss Calibration Service

Accredited by the Swiss Accreditation Service (SAS)
The Swiss Accreditation Service is one of the signatories to the EA Multilateral Agreement for the recognition of calibration certificates

Accreditation No.: SCS 108

Client **Sporton-CN (Auden)**

Certificate No: D5GHzV2-1113_Nov14

CALIBRATION CERTIFICATE

Object	D5GHzV2 - SN:1113
Calibration procedure(s)	QA CAL-22.v2 Calibration procedure for dipole validation kits between 3-6 GHz
Calibration date:	November 24, 2014

This calibration certificate documents the traceability to national standards, which realize the physical units of measurements (SI).
The measurements and the uncertainties with confidence probability are given on the following pages and are part of the certificate.

All calibrations have been conducted in the closed laboratory facility: environment temperature (22 ± 3)°C and humidity < 70%.

Calibration Equipment used (M&TE critical for calibration)

Primary Standards	ID #	Cal Date (Certificate No.)	Scheduled Calibration
Power meter EPM-442A	GB37480704	07-Oct-14 (No. 217-02020)	Oct-15
Power sensor HP 8481A	US37292783	07-Oct-14 (No. 217-02020)	Oct-15
Power sensor HP 8481A	MY41092317	07-Oct-14 (No. 217-02021)	Oct-15
Reference 20 dB Attenuator	SN: 5058 (20k)	03-Apr-14 (No. 217-01918)	Apr-15
Type-N mismatch combination	SN: 5047.2 / 06327	03-Apr-14 (No. 217-01921)	Apr-15
Reference Probe ES3DV3	SN: 3205	30-Dec-13 (No. ES3-3205_Dec13)	Dec-14
DAE4	SN: 601	18-Aug-14 (No. DAE4-601_Aug14)	Aug-15

Secondary Standards	ID #	Check Date (in house)	Scheduled Check
RF generator R&S SMT-06	100005	04-Aug-99 (in house check Oct-13)	In house check: Oct-16
Network Analyzer HP 8753E	US37390585 S4206	18-Oct-01 (in house check Oct-14)	In house check: Oct-15

	Name	Function	Signature
Calibrated by:	Jeton Kastrati	Laboratory Technician	
Approved by:	Katja Pokovic	Technical Manager	

Issued: November 24, 2014

This calibration certificate shall not be reproduced except in full without written approval of the laboratory.

Glossary:

TSL	tissue simulating liquid
ConvF	sensitivity in TSL / NORM x,y,z
N/A	not applicable or not measured

Calibration is Performed According to the Following Standards:

a) IEC 62209-2, "Evaluation of Human Exposure to Radio Frequency Fields from Handheld and Body-Mounted Wireless Communication Devices in the Frequency Range of 30 MHz to 6 GHz: Human models, Instrumentation, and Procedures"; Part 2: "Procedure to determine the Specific Absorption Rate (SAR) for including accessories and multiple transmitters", March 2010
b) KDB 865664, "SAR Measurement Requirements for 100 MHz to 6 GHz"
c) IEEE Std 1528-2013, "IEEE Recommended Practice for Determining the Peak Spatial-Averaged Specific Absorption Rate (SAR) in the Human Head from Wireless Communications Devices: Measurement Techniques", June 2013

Additional Documentation:

d) DASY4/5 System Handbook

Methods Applied and Interpretation of Parameters:

- *Measurement Conditions:* Further details are available from the Validation Report at the end of the certificate. All figures stated in the certificate are valid at the frequency indicated.
- *Antenna Parameters with TSL:* The dipole is mounted with the spacer to position its feed point exactly below the center marking of the flat phantom section, with the arms oriented parallel to the body axis.
- *Feed Point Impedance and Return Loss:* These parameters are measured with the dipole positioned under the liquid filled phantom. The impedance stated is transformed from the measurement at the SMA connector to the feed point. The Return Loss ensures low reflected power. No uncertainty required.
- *Electrical Delay:* One-way delay between the SMA connector and the antenna feed point. No uncertainty required.
- *SAR measured:* SAR measured at the stated antenna input power.
- *SAR normalized:* SAR as measured, normalized to an input power of 1 W at the antenna connector.
- *SAR for nominal TSL parameters:* The measured TSL parameters are used to calculate the nominal SAR result.

The reported uncertainty of measurement is stated as the standard uncertainty of measurement multiplied by the coverage factor k=2, which for a normal distribution corresponds to a coverage probability of approximately 95%.

Measurement Conditions

DASY system configuration, as far as not given on page 1.

DASY Version	DASY5	V52.8.8
Extrapolation	Advanced Extrapolation	
Phantom	Modular Flat Phantom V5.0	
Distance Dipole Center - TSL	10 mm	with Spacer
Zoom Scan Resolution	dx, dy = 4.0 mm, dz = 1.4 mm	Graded Ratio = 1.4 (Z direction)
Frequency	5200 MHz ± 1 MHz 5300 MHz ± 1 MHz 5600 MHz ± 1 MHz 5800 MHz ± 1 MHz	

Head TSL parameters at 5200 MHz

The following parameters and calculations were applied.

	Temperature	**Permittivity**	**Conductivity**
Nominal Head TSL parameters	22.0 °C	36.0	4.66 mho/m
Measured Head TSL parameters	(22.0 ± 0.2) °C	34.9 ± 6 %	4.59 mho/m ± 6 %
Head TSL temperature change during test	< 0.5 °C	----	----

SAR result with Head TSL at 5200 MHz

SAR averaged over 1 cm^3 (1 g) of Head TSL	Condition	
SAR measured	100 mW input power	8.05 W/kg
SAR for nominal Head TSL parameters	normalized to 1W	**80.0 W/kg ± 19.9 % (k=2)**

SAR averaged over 10 cm^3 (10 g) of Head TSL	condition	
SAR measured	100 mW input power	2.30 W/kg
SAR for nominal Head TSL parameters	normalized to 1W	**22.8 W/kg ± 19.5 % (k=2)**

Head TSL parameters at 5300 MHz

The following parameters and calculations were applied.

	Temperature	Permittivity	Conductivity
Nominal Head TSL parameters	22.0 °C	35.9	4.76 mho/m
Measured Head TSL parameters	(22.0 ± 0.2) °C	34.7 ± 6 %	4.68 mho/m ± 6 %
Head TSL temperature change during test	< 0.5 °C	----	----

SAR result with Head TSL at 5300 MHz

SAR averaged over 1 cm^3 (1 g) of Head TSL	Condition	
SAR measured	100 mW input power	8.30 W/kg
SAR for nominal Head TSL parameters	normalized to 1W	**82.4 W / kg ± 19.9 % (k=2)**

SAR averaged over 10 cm^3 (10 g) of Head TSL	condition	
SAR measured	100 mW input power	2.38 W/kg
SAR for nominal Head TSL parameters	normalized to 1W	**23.6 W/kg ± 19.5 % (k=2)**

Head TSL parameters at 5600 MHz

The following parameters and calculations were applied.

	Temperature	Permittivity	Conductivity
Nominal Head TSL parameters	22.0 °C	35.5	5.07 mho/m
Measured Head TSL parameters	(22.0 ± 0.2) °C	34.3 ± 6 %	4.98 mho/m ± 6 %
Head TSL temperature change during test	< 0.5 °C	----	----

SAR result with Head TSL at 5600 MHz

SAR averaged over 1 cm^3 (1 g) of Head TSL	Condition	
SAR measured	100 mW input power	8.31 W/kg
SAR for nominal Head TSL parameters	normalized to 1W	**82.4 W/kg ± 19.9 % (k=2)**

SAR averaged over 10 cm^3 (10 g) of Head TSL	condition	
SAR measured	100 mW input power	2.37 W/kg
SAR for nominal Head TSL parameters	normalized to 1W	**23.5 W/kg ± 19.5 % (k=2)**

Head TSL parameters at 5800 MHz

The following parameters and calculations were applied.

	Temperature	Permittivity	Conductivity
Nominal Head TSL parameters	22.0 °C	35.3	5.27 mho/m
Measured Head TSL parameters	(22.0 ± 0.2) °C	34.0 ± 6 %	5.19 mho/m ± 6 %
Head TSL temperature change during test	< 0.5 °C	----	----

SAR result with Head TSL at 5800 MHz

SAR averaged over 1 cm^3 (1 g) of Head TSL	Condition	
SAR measured	100 mW input power	7.92 W/kg
SAR for nominal Head TSL parameters	normalized to 1W	**78.5 W/kg ± 19.9 % (k=2)**

SAR averaged over 10 cm^3 (10 g) of Head TSL	condition	
SAR measured	100 mW input power	2.26 W/kg
SAR for nominal Head TSL parameters	normalized to 1W	**22.4 W/kg ± 19.5 % (k=2)**

Body TSL parameters at 5200 MHz

The following parameters and calculations were applied.

	Temperature	Permittivity	Conductivity
Nominal Body TSL parameters	22.0 °C	49.0	5.30 mho/m
Measured Body TSL parameters	(22.0 ± 0.2) °C	47.1 ± 6 %	5.45 mho/m ± 6 %
Body TSL temperature change during test	< 0.5 °C	----	----

SAR result with Body TSL at 5200 MHz

SAR averaged over 1 cm^3 (1 g) of Body TSL	Condition	
SAR measured	100 mW input power	7.55 W/kg
SAR for nominal Body TSL parameters	normalized to 1W	**74.9 W/kg ± 19.9 % (k=2)**

SAR averaged over 10 cm^3 (10 g) of Body TSL	condition	
SAR measured	100 mW input power	2.11 W/kg
SAR for nominal Body TSL parameters	normalized to 1W	**20.9 W/kg ± 19.5 % (k=2)**

Body TSL parameters at 5300 MHz

The following parameters and calculations were applied.

	Temperature	Permittivity	Conductivity
Nominal Body TSL parameters	22.0 °C	48.9	5.42 mho/m
Measured Body TSL parameters	(22.0 ± 0.2) °C	46.9 ± 6 %	5.58 mho/m ± 6 %
Body TSL temperature change during test	< 0.5 °C	----	----

SAR result with Body TSL at 5300 MHz

SAR averaged over 1 cm^3 (1 g) of Body TSL	Condition	
SAR measured	100 mW input power	7.84 W/kg
SAR for nominal Body TSL parameters	normalized to 1W	**77.8 W/kg ± 19.9 % (k=2)**

SAR averaged over 10 cm^3 (10 g) of Body TSL	condition	
SAR measured	100 mW input power	2.19 W/kg
SAR for nominal Body TSL parameters	normalized to 1W	**21.7 W/kg ± 19.5 % (k=2)**

Body TSL parameters at 5600 MHz

The following parameters and calculations were applied.

	Temperature	Permittivity	Conductivity
Nominal Body TSL parameters	22.0 °C	48.5	5.77 mho/m
Measured Body TSL parameters	(22.0 ± 0.2) °C	46.4 ± 6 %	5.98 mho/m ± 6 %
Body TSL temperature change during test	< 0.5 °C	----	----

SAR result with Body TSL at 5600 MHz

SAR averaged over 1 cm^3 (1 g) of Body TSL	Condition	
SAR measured	100 mW input power	8.21 W/kg
SAR for nominal Body TSL parameters	normalized to 1W	**81.5 W/kg ± 19.9 % (k=2)**

SAR averaged over 10 cm^3 (10 g) of Body TSL	condition	
SAR measured	100 mW input power	2.24 W/kg
SAR for nominal Body TSL parameters	normalized to 1W	**22.2 W/kg ± 19.5 % (k=2)**

Body TSL parameters at 5800 MHz

The following parameters and calculations were applied.

	Temperature	Permittivity	Conductivity
Nominal Body TSL parameters	22.0 °C	48.2	6.00 mho/m
Measured Body TSL parameters	(22.0 ± 0.2) °C	46.0 ± 6 %	6.25 mho/m ± 6 %
Body TSL temperature change during test	< 0.5 °C	----	----

SAR result with Body TSL at 5800 MHz

SAR averaged over 1 cm^3 (1 g) of Body TSL	Condition	
SAR measured	100 mW input power	7.60 W/kg
SAR for nominal Body TSL parameters	normalized to 1W	**75.4 W/kg ± 19.9 % (k=2)**

SAR averaged over 10 cm^3 (10 g) of Body TSL	condition	
SAR measured	100 mW input power	2.10 W/kg
SAR for nominal Body TSL parameters	normalized to 1W	**20.8 W/kg ± 19.5 % (k=2)**

Appendix (Additional assessments outside the scope of SCS108)

Antenna Parameters with Head TSL at 5200 MHz

Impedance, transformed to feed point	51.2 Ω - 8.5 jΩ
Return Loss	- 21.4 dB

Antenna Parameters with Head TSL at 5300 MHz

Impedance, transformed to feed point	51.3 Ω - 4.0 jΩ
Return Loss	- 27.6 dB

Antenna Parameters with Head TSL at 5600 MHz

Impedance, transformed to feed point	55.3 Ω - 2.2 jΩ
Return Loss	- 25.3 dB

Antenna Parameters with Head TSL at 5800 MHz

Impedance, transformed to feed point	55.0 Ω - 0.4 jΩ
Return Loss	- 26.4 dB

Antenna Parameters with Body TSL at 5200 MHz

Impedance, transformed to feed point	50.7 Ω - 7.9 jΩ
Return Loss	- 22.1 dB

Antenna Parameters with Body TSL at 5300 MHz

Impedance, transformed to feed point	51.2 Ω - 2.9 jΩ
Return Loss	- 30.2 dB

Antenna Parameters with Body TSL at 5600 MHz

Impedance, transformed to feed point	55.9 Ω - 1.8 jΩ
Return Loss	- 24.6 dB

Antenna Parameters with Body TSL at 5800 MHz

Impedance, transformed to feed point	54.8 Ω + 0.5 jΩ
Return Loss	- 26.8 dB

General Antenna Parameters and Design

Electrical Delay (one direction)	1.195 ns

After long term use with 100W radiated power, only a slight warming of the dipole near the feedpoint can be measured.

The dipole is made of standard semirigid coaxial cable. The center conductor of the feeding line is directly connected to the second arm of the dipole. The antenna is therefore short-circuited for DC-signals. On some of the dipoles, small end caps are added to the dipole arms in order to improve matching when loaded according to the position as explained in the "Measurement Conditions" paragraph. The SAR data are not affected by this change. The overall dipole length is still according to the Standard.
No excessive force must be applied to the dipole arms, because they might bend or the soldered connections near the feedpoint may be damaged.

Additional EUT Data

Manufactured by	SPEAG
Manufactured on	March 11, 2011

DASY5 Validation Report for Head TSL

Date: 24.11.2014

Test Laboratory: SPEAG, Zurich, Switzerland

DUT: Dipole 5GHz; Type: D5GHzV2; Serial: D5GHzV2 - SN:1113

Communication System: UID 0 - CW; Frequency: 5200 MHz, Frequency: 5300 MHz, Frequency: 5600 MHz, Frequency: 5800 MHz
Medium parameters used: f = 5200 MHz; σ = 4.59 S/m; ε_r = 34.9; ρ = 1000 kg/m^3 , Medium parameters used: f = 5300 MHz; σ = 4.68 S/m; ε_r = 34.7; ρ = 1000 kg/m^3 , Medium parameters used: f = 5600 MHz; σ = 4.98 S/m; ε_r = 34.3; ρ = 1000 kg/m^3 , Medium parameters used: f = 5800 MHz; σ = 5.19 S/m; ε_r = 34; ρ = 1000 kg/m^3
Phantom section: Flat Section
Measurement Standard: DASY5 (IEEE/IEC/ANSI C63.19-2011)

DASY52 Configuration:

- Probe: EX3DV4 - SN3503; ConvF(5.52, 5.52, 5.52); Calibrated: 30.12.2013, ConvF(5.2, 5.2, 5.2); Calibrated: 30.12.2013, ConvF(4.86, 4.86, 4.86); Calibrated: 30.12.2013, ConvF(4.91, 4.91, 4.91); Calibrated: 30.12.2013;
- Sensor-Surface: 1.4mm (Mechanical Surface Detection)
- Electronics: DAE4 Sn601; Calibrated: 18.08.2014
- Phantom: Flat Phantom 5.0 (front); Type: QD000P50AA; Serial: 1001
- DASY52 52.8.8(1222); SEMCAD X 14.6.10(7331)

Dipole Calibration for Head Tissue/Pin=100mW, dist=10mm, f=5200 MHz/Zoom Scan, dist=1.4mm (8x8x7)/Cube 0: Measurement grid: dx=4mm, dy=4mm, dz=1.4mm
Reference Value = 65.61 V/m; Power Drift = 0.01 dB
Peak SAR (extrapolated) = 29.6 W/kg
SAR(1 g) = 8.05 W/kg; SAR(10 g) = 2.3 W/kg
Maximum value of SAR (measured) = 18.8 W/kg

Dipole Calibration for Head Tissue/Pin=100mW, dist=10mm, f=5300 MHz/Zoom Scan, dist=1.4mm (8x8x7)/Cube 0: Measurement grid: dx=4mm, dy=4mm, dz=1.4mm
Reference Value = 65.98 V/m; Power Drift = 0.02 dB
Peak SAR (extrapolated) = 31.6 W/kg
SAR(1 g) = 8.3 W/kg; SAR(10 g) = 2.38 W/kg
Maximum value of SAR (measured) = 19.5 W/kg

Dipole Calibration for Head Tissue/Pin=100mW, dist=10mm, f=5600 MHz/Zoom Scan, dist=1.4mm (8x8x7)/Cube 0: Measurement grid: dx=4mm, dy=4mm, dz=1.4mm
Reference Value = 64.58 V/m; Power Drift = 0.03 dB
Peak SAR (extrapolated) = 33.0 W/kg
SAR(1 g) = 8.31 W/kg; SAR(10 g) = 2.37 W/kg
Maximum value of SAR (measured) = 19.9 W/kg

Dipole Calibration for Head Tissue/Pin=100mW, dist=10mm, f=5800 MHz/Zoom Scan, dist=1.4mm (8x8x7)/Cube 0: Measurement grid: dx=4mm, dy=4mm, dz=1.4mm
Reference Value = 62.47 V/m; Power Drift = 0.04 dB
Peak SAR (extrapolated) = 32.5 W/kg
SAR(1 g) = 7.92 W/kg; SAR(10 g) = 2.26 W/kg
Maximum value of SAR (measured) = 19.4 W/kg

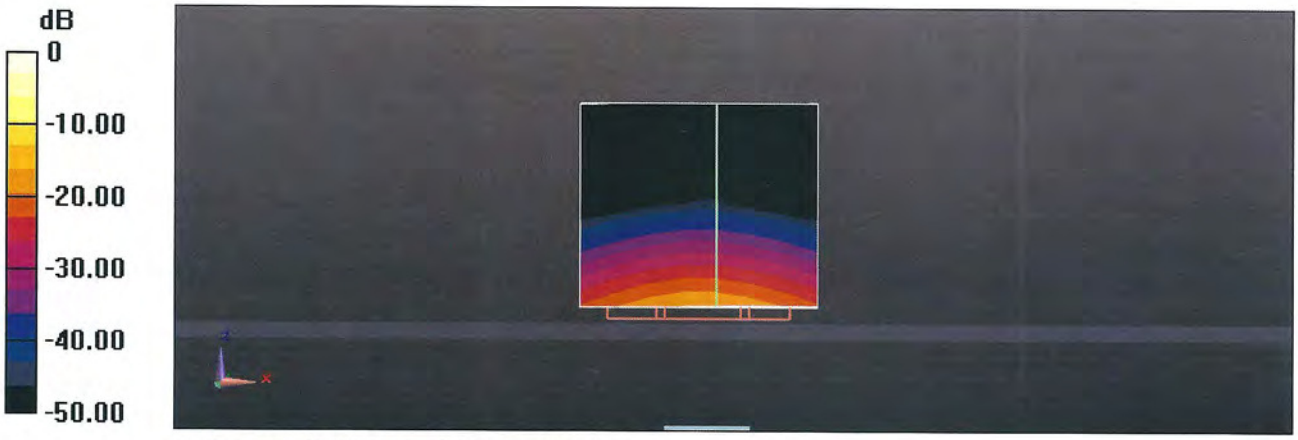

0 dB = 18.8 W/kg = 12.74 dBW/kg

Impedance Measurement Plot for Head TSL

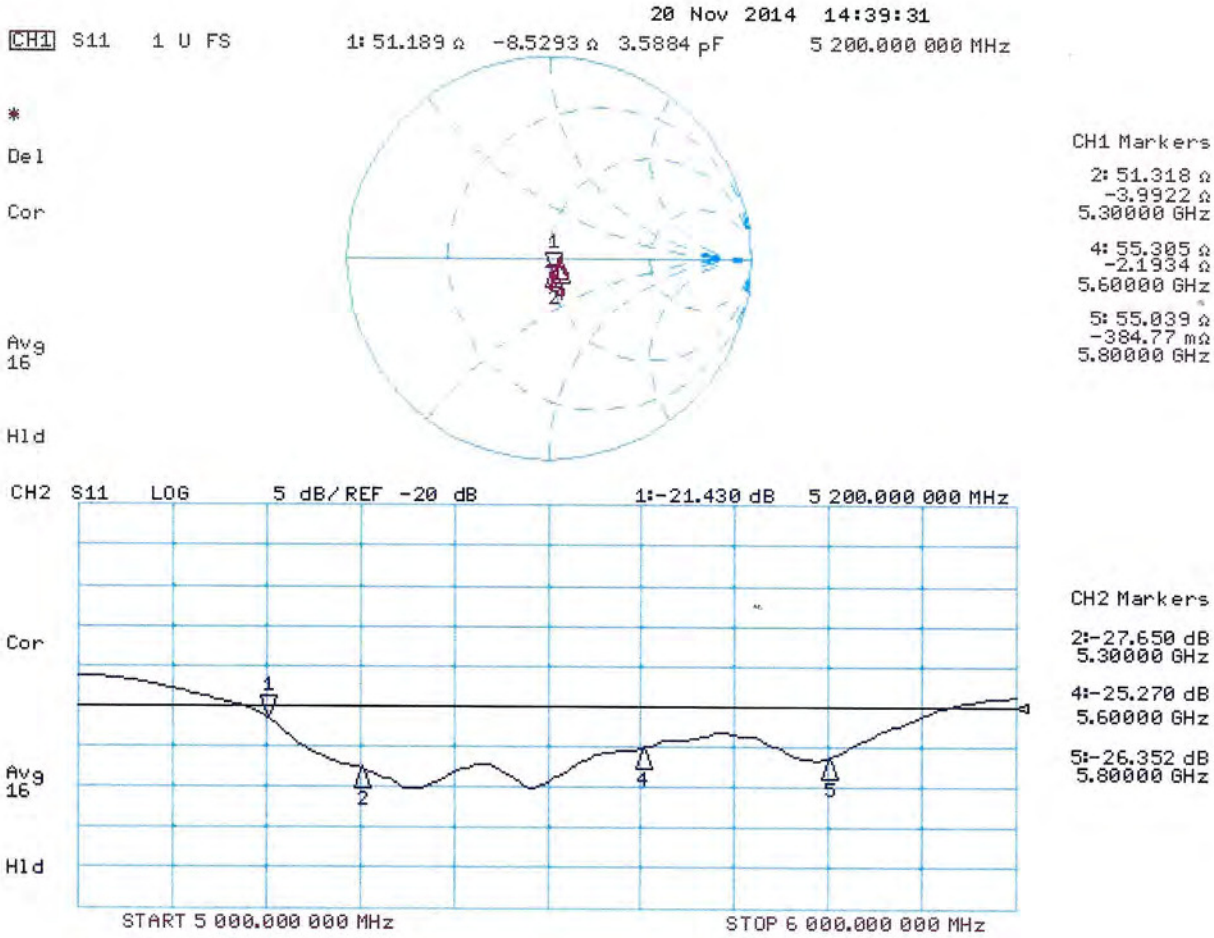

DASY5 Validation Report for Body TSL

Date: 20.11.2014

Test Laboratory: SPEAG, Zurich, Switzerland

DUT: Dipole 5GHz; Type: D5GHzV2; Serial: D5GHzV2 - SN:1113

Communication System: UID 0 - CW; Frequency: 5200 MHz, Frequency: 5300 MHz, Frequency: 5600 MHz, Frequency: 5800 MHz
Medium parameters used: f = 5200 MHz; σ = 5.45 S/m; ε_r = 47.1; ρ = 1000 kg/m^3 , Medium parameters used: f = 5300 MHz; σ = 5.58 S/m; ε_r = 46.9; ρ = 1000 kg/m^3 , Medium parameters used: f = 5600 MHz; σ = 5.98 S/m; ε_r = 46.4; ρ = 1000 kg/m^3 , Medium parameters used: f = 5800 MHz; σ = 6.25 S/m; ε_r = 46; ρ = 1000 kg/m^3
Phantom section: Flat Section
Measurement Standard: DASY5 (IEEE/IEC/ANSI C63.19-2011)

DASY52 Configuration:

- Probe: EX3DV4 - SN3503; ConvF(5.01, 5.01, 5.01); Calibrated: 30.12.2013, ConvF(4.76, 4.76, 4.76); Calibrated: 30.12.2013, ConvF(4.3, 4.3, 4.3); Calibrated: 30.12.2013, ConvF(4.47, 4.47, 4.47); Calibrated: 30.12.2013;
- Sensor-Surface: 1.4mm (Mechanical Surface Detection)
- Electronics: DAE4 Sn601; Calibrated: 18.08.2014
- Phantom: Flat Phantom 5.0 (back); Type: QD000P50AA; Serial: 1002
- DASY52 52.8.8(1222); SEMCAD X 14.6.10(7331)

Dipole Calibration for Body Tissue/Pin=100mW, dist=10mm, f=5200 MHz/Zoom Scan, dist=1.4mm (8x8x7)/Cube 0: Measurement grid: dx=4mm, dy=4mm, dz=1.4mm
Reference Value = 58.99 V/m; Power Drift = 0.01 dB
Peak SAR (extrapolated) = 29.2 W/kg
SAR(1 g) = 7.55 W/kg; SAR(10 g) = 2.11 W/kg
Maximum value of SAR (measured) = 17.3 W/kg

Dipole Calibration for Body Tissue/Pin=100mW, dist=10mm, f=5300 MHz/Zoom Scan, dist=1.4mm (8x8x7)/Cube 0: Measurement grid: dx=4mm, dy=4mm, dz=1.4mm
Reference Value = 59.43 V/m; Power Drift = 0.04 dB
Peak SAR (extrapolated) = 31.4 W/kg
SAR(1 g) = 7.84 W/kg; SAR(10 g) = 2.19 W/kg
Maximum value of SAR (measured) = 18.9 W/kg

Dipole Calibration for Body Tissue/Pin=100mW, dist=10mm, f=5600 MHz/Zoom Scan, dist=1.4mm (8x8x7)/Cube 0: Measurement grid: dx=4mm, dy=4mm, dz=1.4mm
Reference Value = 58.78 V/m; Power Drift = -0.03 dB
Peak SAR (extrapolated) = 36.7 W/kg
SAR(1 g) = 8.21 W/kg; SAR(10 g) = 2.24 W/kg
Maximum value of SAR (measured) = 20.9 W/kg

Dipole Calibration for Body Tissue/Pin=100mW, dist=10mm, f=5800 MHz/Zoom Scan, dist=1.4mm (8x8x7)/Cube 0: Measurement grid: dx=4mm, dy=4mm, dz=1.4mm
Reference Value = 55.92 V/m; Power Drift = -0.07 dB
Peak SAR (extrapolated) = 34.8 W/kg
SAR(1 g) = 7.6 W/kg; SAR(10 g) = 2.1 W/kg
Maximum value of SAR (measured) = 18.5 W/kg

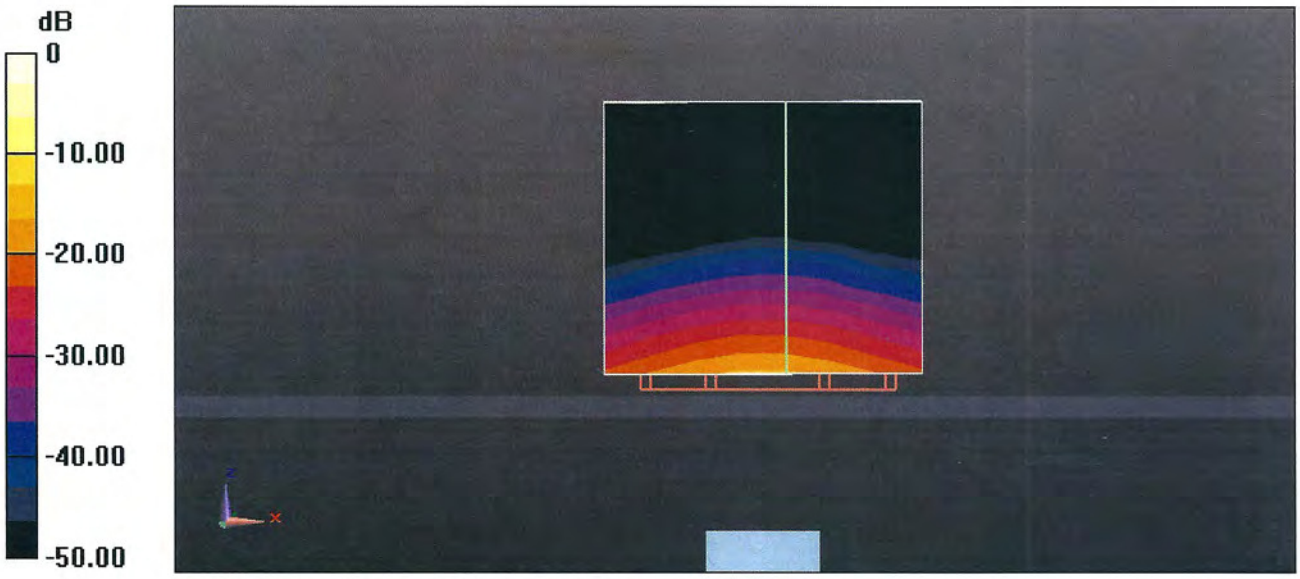

0 dB = 17.3 W/kg = 12.38 dBW/kg

Impedance Measurement Plot for Body TSL

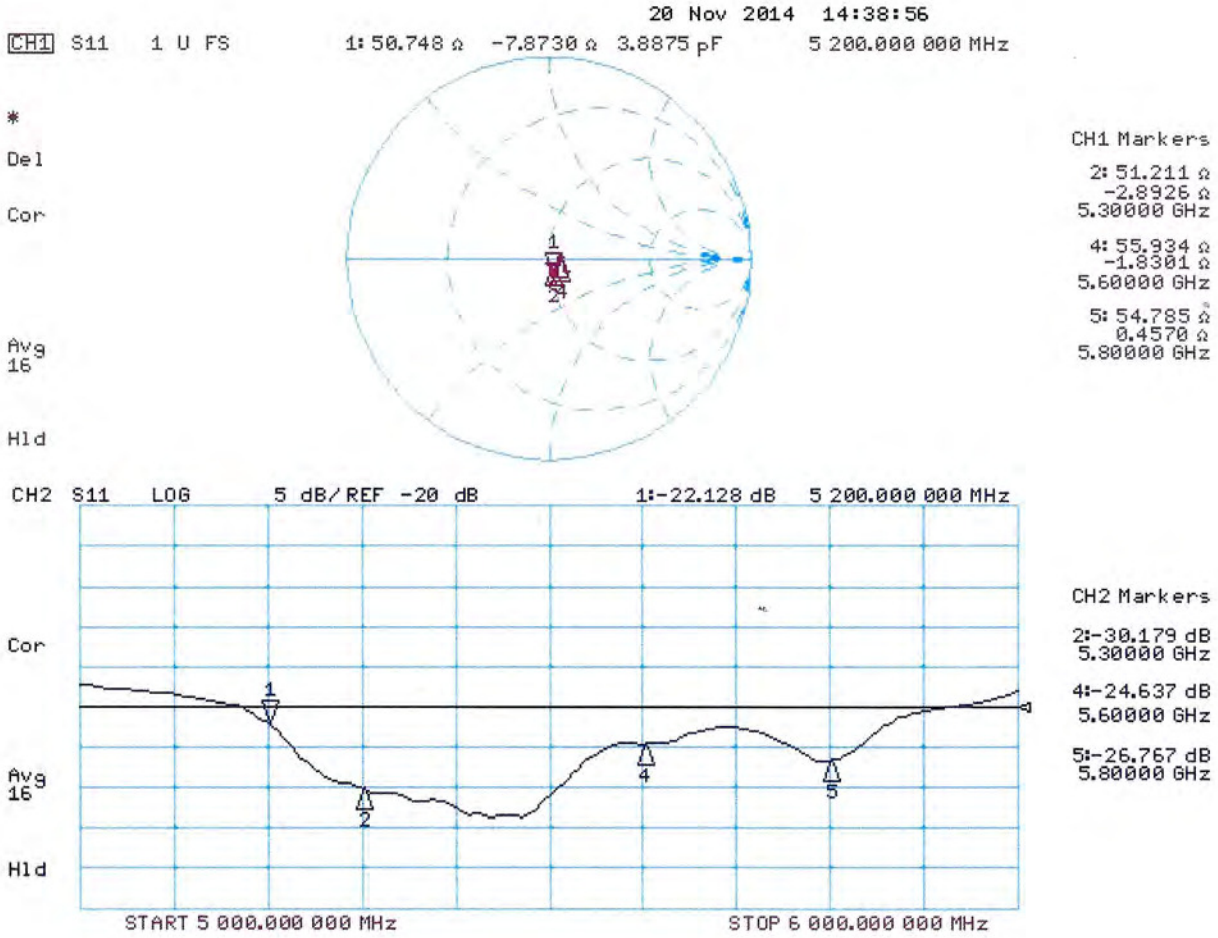

Zeughausstrasse 43, 8004 Zurich, Switzerland
Phone +41 44 245 9700, Fax +41 44 245 9779
info@speag.com, http://www.speag.com

IMPORTANT NOTICE

USAGE OF THE DAE 4

The DAE unit is a delicate, high precision instrument and requires careful treatment by the user. There are no serviceable parts inside the DAE. Special attention shall be given to the following points:

Battery Exchange: The battery cover of the DAE4 unit is closed using a screw, over tightening the screw may cause the threads inside the DAE to wear out.

Shipping of the DAE: Before shipping the DAE to SPEAG for calibration, remove the batteries and pack the DAE in an antistatic bag. This antistatic bag shall then be packed into a larger box or container which protects the DAE from impacts during transportation. The package shall be marked to indicate that a fragile instrument is inside.

E-Stop Failures: Touch detection may be malfunctioning due to broken magnets in the E-stop. Rough handling of the E-stop may lead to damage of these magnets. Touch and collision errors are often caused by dust and dirt accumulated in the E-stop. To prevent E-stop failure, the customer shall always mount the probe to the DAE carefully and keep the DAE unit in a non-dusty environment if not used for measurements.

Repair: Minor repairs are performed at no extra cost during the annual calibration. However, SPEAG reserves the right to charge for any repair especially if rough unprofessional handling caused the defect.

DASY Configuration Files: Since the exact values of the DAE input resistances, as measured during the calibration procedure of a DAE unit, are not used by the DASY software, a nominal value of 200 MOhm is given in the corresponding configuration file.

Important Note:
Warranty and calibration is void if the DAE unit is disassembled partly or fully by the Customer.

Important Note:
Never attempt to grease or oil the E-stop assembly. Cleaning and readjusting of the E-stop assembly is allowed by certified SPEAG personnel only and is part of the annual calibration procedure.

Important Note:
To prevent damage of the DAE probe connector pins, use great care when installing the probe to the DAE. Carefully connect the probe with the connector notch oriented in the mating position. Avoid any rotational movement of the probe body versus the DAE while turning the locking nut of the connector. The same care shall be used when disconnecting the probe from the DAE.

Calibration Laboratory of
Schmid & Partner
Engineering AG
Zeughausstrasse 43, 8004 Zurich, Switzerland

S Schweizerischer Kalibrierdienst
C Service suisse d'étalonnage
Servizio svizzero di taratura
S Swiss Calibration Service

Accredited by the Swiss Accreditation Service (SAS)
The Swiss Accreditation Service is one of the signatories to the EA Multilateral Agreement for the recognition of calibration certificates

Accreditation No.: SCS 108

Client **Sporton-SZ (Auden)**

Certificate No: DAE4-1303_Dec14

CALIBRATION CERTIFICATE

Object	DAE4 - SD 000 D04 BM - SN: 1303
Calibration procedure(s)	QA CAL-06.v28 Calibration procedure for the data acquisition electronics (DAE)
Calibration date:	December 11, 2014

This calibration certificate documents the traceability to national standards, which realize the physical units of measurements (SI).
The measurements and the uncertainties with confidence probability are given on the following pages and are part of the certificate.

All calibrations have been conducted in the closed laboratory facility: environment temperature (22 ± 3)°C and humidity < 70%.

Calibration Equipment used (M&TE critical for calibration)

Primary Standards	ID #	Cal Date (Certificate No.)	Scheduled Calibration
Keithley Multimeter Type 2001	SN: 0810278	03-Oct-14 (No:15573)	Oct-15
Secondary Standards	**ID #**	**Check Date (in house)**	**Scheduled Check**
Auto DAE Calibration Unit	SE UWS 053 AA 1001	07-Jan-14 (in house check)	In house check: Jan-15
Calibrator Box V2.1	SE UMS 006 AA 1002	07-Jan-14 (in house check)	In house check: Jan-15

	Name	Function	Signature
Calibrated by:	Dominique Steffen	Technician	
Approved by:	Fin Bomholt	Deputy Technical Manager	i.V.

Issued: December 11, 2014

This calibration certificate shall not be reproduced except in full without written approval of the laboratory.

Glossary

DAE	data acquisition electronics
Connector angle	information used in DASY system to align probe sensor X to the robot coordinate system.

Methods Applied and Interpretation of Parameters

- *DC Voltage Measurement:* Calibration Factor assessed for use in DASY system by comparison with a calibrated instrument traceable to national standards. The figure given corresponds to the full scale range of the voltmeter in the respective range.
- *Connector angle*: The angle of the connector is assessed measuring the angle mechanically by a tool inserted. Uncertainty is not required.
- The following parameters as documented in the Appendix contain technical information as a result from the performance test and require no uncertainty.
  - *DC Voltage Measurement Linearity:* Verification of the Linearity at +10% and -10% of the nominal calibration voltage. Influence of offset voltage is included in this measurement.
  - *Common mode sensitivity:* Influence of a positive or negative common mode voltage on the differential measurement.
  - *Channel separation:* Influence of a voltage on the neighbor channels not subject to an input voltage.
  - *AD Converter Values with inputs shorted:* Values on the internal AD converter corresponding to zero input voltage
  - *Input Offset Measurement*: Output voltage and statistical results over a large number of zero voltage measurements.
  - *Input Offset Current:* Typical value for information; Maximum channel input offset current, not considering the input resistance.
  - *Input resistance:* Typical value for information: DAE input resistance at the connector, during internal auto-zeroing and during measurement.
  - *Low Battery Alarm Voltage:* Typical value for information. Below this voltage, a battery alarm signal is generated.
  - *Power consumption:* Typical value for information. Supply currents in various operating modes.

DC Voltage Measurement

A/D - Converter Resolution nominal

High Range: 1LSB = 6.1μV , full range = -100...+300 mV

Low Range: 1LSB = 61nV , full range = -1.....+3mV

DASY measurement parameters: Auto Zero Time: 3 sec; Measuring time: 3 sec

Calibration Factors	X	Y	Z
High Range	405.582 ± 0.02% (k=2)	403.473 ± 0.02% (k=2)	404.923 ± 0.02% (k=2)
Low Range	3.96551 ± 1.50% (k=2)	3.99166 ± 1.50% (k=2)	3.98776 ± 1.50% (k=2)

Connector Angle

Connector Angle to be used in DASY system	186.0 ° ± 1 °

Appendix (Additional assessments outside the scope of SCS108)

1. DC Voltage Linearity

High Range		Reading (µV)	Difference (µV)	Error (%)
Channel X	+ Input	200032.42	0.17	0.00
Channel X	+ Input	20006.44	2.48	0.01
Channel X	- Input	-20003.75	1.42	-0.01
Channel Y	+ Input	200033.90	1.88	0.00
Channel Y	+ Input	20003.42	-0.41	-0.00
Channel Y	- Input	-20004.48	0.84	-0.00
Channel Z	+ Input	200035.95	4.02	0.00
Channel Z	+ Input	20001.57	-2.14	-0.01
Channel Z	- Input	-20006.48	-1.03	0.01

Low Range		Reading (µV)	Difference (µV)	Error (%)
Channel X	+ Input	2000.63	0.09	0.00
Channel X	+ Input	201.55	0.94	0.47
Channel X	- Input	-199.12	0.32	-0.16
Channel Y	+ Input	2000.86	0.46	0.02
Channel Y	+ Input	200.23	-0.19	-0.10
Channel Y	- Input	-199.83	-0.23	0.11
Channel Z	+ Input	1999.80	-0.49	-0.02
Channel Z	+ Input	199.09	-1.38	-0.69
Channel Z	- Input	-200.32	-0.71	0.35

2. Common mode sensitivity

DASY measurement parameters: Auto Zero Time: 3 sec; Measuring time: 3 sec

	Common mode Input Voltage (mV)	High Range Average Reading (µV)	Low Range Average Reading (µV)
Channel X	200	8.67	7.40
	- 200	-5.53	-7.23
Channel Y	200	6.03	5.93
	- 200	-7.02	-6.90
Channel Z	200	-4.66	-4.55
	- 200	1.56	1.76

3. Channel separation

DASY measurement parameters: Auto Zero Time: 3 sec; Measuring time: 3 sec

	Input Voltage (mV)	Channel X (µV)	Channel Y (µV)	Channel Z (µV)
Channel X	200	-	1.77	-4.82
Channel Y	200	8.18	-	1.73
Channel Z	200	9.79	5.56	-

4. AD-Converter Values with inputs shorted

DASY measurement parameters: Auto Zero Time: 3 sec; Measuring time: 3 sec

	High Range (LSB)	Low Range (LSB)
Channel X	15917	16559
Channel Y	15625	16454
Channel Z	16119	13095

5. Input Offset Measurement

DASY measurement parameters: Auto Zero Time: 3 sec; Measuring time: 3 sec
Input 10MΩ

	Average (μV)	min. Offset (μV)	max. Offset (μV)	Std. Deviation (μV)
Channel X	-0.80	-1.98	0.43	0.53
Channel Y	-0.05	-2.62	1.86	0.61
Channel Z	-0.54	-2.21	1.34	0.55

6. Input Offset Current

Nominal Input circuitry offset current on all channels: <25fA

7. Input Resistance (Typical values for information)

	Zeroing (kOhm)	Measuring (MOhm)
Channel X	200	200
Channel Y	200	200
Channel Z	200	200

8. Low Battery Alarm Voltage (Typical values for information)

Typical values	Alarm Level (VDC)
Supply (+ Vcc)	+7.9
Supply (- Vcc)	-7.6

9. Power Consumption (Typical values for information)

Typical values	Switched off (mA)	Stand by (mA)	Transmitting (mA)
Supply (+ Vcc)	+0.01	+6	+14
Supply (- Vcc)	–0.01	-8	-9

Calibration Laboratory of
Schmid & Partner
Engineering AG
Zeughausstrasse 43, 8004 Zurich, Switzerland

S Schweizerischer Kalibrierdienst
C Service suisse d'étalonnage
Servizio svizzero di taratura
S Swiss Calibration Service

Accredited by the Swiss Accreditation Service (SAS)
The Swiss Accreditation Service is one of the signatories to the EA Multilateral Agreement for the recognition of calibration certificates

Accreditation No.: SCS 108

Client **Sporton-SZ (Auden)**

Certificate No: EX3-3819_Nov14

CALIBRATION CERTIFICATE

Object	EX3DV4 - SN:3819
Calibration procedure(s)	QA CAL-01.v9, QA CAL-14.v4, QA CAL-23.v5, QA CAL-25.v6 Calibration procedure for dosimetric E-field probes
Calibration date:	November 13, 2014

This calibration certificate documents the traceability to national standards, which realize the physical units of measurements (SI).
The measurements and the uncertainties with confidence probability are given on the following pages and are part of the certificate.

All calibrations have been conducted in the closed laboratory facility: environment temperature (22 ± 3)°C and humidity < 70%.

Calibration Equipment used (M&TE critical for calibration)

Primary Standards	ID	Cal Date (Certificate No.)	Scheduled Calibration
Power meter E4419B	GB41293874	03-Apr-14 (No. 217-01911)	Apr-15
Power sensor E4412A	MY41498087	03-Apr-14 (No. 217-01911)	Apr-15
Reference 3 dB Attenuator	SN: S5054 (3c)	03-Apr-14 (No. 217-01915)	Apr-15
Reference 20 dB Attenuator	SN: S5277 (20x)	03-Apr-14 (No. 217-01919)	Apr-15
Reference 30 dB Attenuator	SN: S5129 (30b)	03-Apr-14 (No. 217-01920)	Apr-15
Reference Probe ES3DV2	SN: 3013	30-Dec-13 (No. ES3-3013_Dec13)	Dec-14
DAE4	SN: 660	13-Dec-13 (No. DAE4-660_Dec13)	Dec-14
Secondary Standards	ID	Check Date (in house)	Scheduled Check
RF generator HP 8648C	US3642U01700	4-Aug-99 (in house check Apr-13)	In house check: Apr-16
Network Analyzer HP 8753E	US37390585	18-Oct-01 (in house check Oct-14)	In house check: Oct-15

	Name	Function	Signature
Calibrated by:	Claudio Leubler	Laboratory Technician	
Approved by:	Katja Pokovic	Technical Manager	

Issued: November 14, 2014

This calibration certificate shall not be reproduced except in full without written approval of the laboratory.

Glossary:

TSL	tissue simulating liquid
NORMx,y,z	sensitivity in free space
ConvF	sensitivity in TSL / NORMx,y,z
DCP	diode compression point
CF	crest factor (1/duty_cycle) of the RF signal
A, B, C, D	modulation dependent linearization parameters
Polarization φ	φ rotation around probe axis
Polarization ϑ	ϑ rotation around an axis that is in the plane normal to probe axis (at measurement center), i.e., ϑ = 0 is normal to probe axis
Connector Angle	information used in DASY system to align probe sensor X to the robot coordinate system

Calibration is Performed According to the Following Standards:

a) IEEE Std 1528-2013, "IEEE Recommended Practice for Determining the Peak Spatial-Averaged Specific Absorption Rate (SAR) in the Human Head from Wireless Communications Devices: Measurement Techniques", June 2013
b) IEC 62209-1, "Procedure to measure the Specific Absorption Rate (SAR) for hand-held devices used in close proximity to the ear (frequency range of 300 MHz to 3 GHz)", February 2005

Methods Applied and Interpretation of Parameters:

- *NORMx,y,z:* Assessed for E-field polarization ϑ = 0 (f ≤ 900 MHz in TEM-cell; f > 1800 MHz: R22 waveguide). NORMx,y,z are only intermediate values, i.e., the uncertainties of NORMx,y,z does not affect the E^2-field uncertainty inside TSL (see below *ConvF*).
- *NORM(f)x,y,z = NORMx,y,z * frequency_response* (see Frequency Response Chart). This linearization is implemented in DASY4 software versions later than 4.2. The uncertainty of the frequency response is included in the stated uncertainty of *ConvF*.
- *DCPx,y,z:* DCP are numerical linearization parameters assessed based on the data of power sweep with CW signal (no uncertainty required). DCP does not depend on frequency nor media.
- *PAR:* PAR is the Peak to Average Ratio that is not calibrated but determined based on the signal characteristics
- *Ax,y,z; Bx,y,z; Cx,y,z; Dx,y,z; VRx,y,z: A, B, C, D* are numerical linearization parameters assessed based on the data of power sweep for specific modulation signal. The parameters do not depend on frequency nor media. *VR* is the maximum calibration range expressed in RMS voltage across the diode.
- *ConvF and Boundary Effect Parameters:* Assessed in flat phantom using E-field (or Temperature Transfer Standard for f ≤ 800 MHz) and inside waveguide using analytical field distributions based on power measurements for f > 800 MHz. The same setups are used for assessment of the parameters applied for boundary compensation (alpha, depth) of which typical uncertainty values are given. These parameters are used in DASY4 software to improve probe accuracy close to the boundary. The sensitivity in TSL corresponds to *NORMx,y,z * ConvF* whereby the uncertainty corresponds to that given for *ConvF*. A frequency dependent *ConvF* is used in DASY version 4.4 and higher which allows extending the validity from ± 50 MHz to ± 100 MHz.
- *Spherical isotropy (3D deviation from isotropy)*: in a field of low gradients realized using a flat phantom exposed by a patch antenna.
- *Sensor Offset*: The sensor offset corresponds to the offset of virtual measurement center from the probe tip (on probe axis). No tolerance required.
- *Connector Angle*: The angle is assessed using the information gained by determining the *NORMx* (no uncertainty required).

Probe EX3DV4

SN:3819

Manufactured:	September 2, 2011
Repaired:	November 4, 2014
Calibrated:	November 13, 2014

Calibrated for DASY/EASY Systems
(Note: non-compatible with DASY2 system!)

DASY/EASY - Parameters of Probe: EX3DV4 - SN:3819

Basic Calibration Parameters

	Sensor X	Sensor Y	Sensor Z	Unc (k=2)
Norm ($\mu V/(V/m)^2$)[A]	0.47	0.41	0.47	± 10.1 %
DCP (mV)[B]	100.5	101.6	100.9	

Modulation Calibration Parameters

UID	Communication System Name		A dB	B dB√µV	C	D dB	VR mV	Unc[E] (k=2)
0	CW	X	0.0	0.0	1.0	0.00	154.0	±3.8 %
		Y	0.0	0.0	1.0		146.8	
		Z	0.0	0.0	1.0		155.0	

The reported uncertainty of measurement is stated as the standard uncertainty of measurement multiplied by the coverage factor k=2, which for a normal distribution corresponds to a coverage probability of approximately 95%.

[A] The uncertainties of NormX,Y,Z do not affect the E^2-field uncertainty inside TSL (see Pages 5 and 6).
[B] Numerical linearization parameter: uncertainty not required.
[E] Uncertainty is determined using the max. deviation from linear response applying rectangular distribution and is expressed for the square of the field value.

DASY/EASY - Parameters of Probe: EX3DV4 - SN:3819

Calibration Parameter Determined in Head Tissue Simulating Media

f (MHz) [C]	Relative Permittivity [F]	Conductivity (S/m) [F]	ConvF X	ConvF Y	ConvF Z	Alpha [G]	Depth [G] (mm)	Unct. (k=2)
750	41.9	0.89	9.94	9.94	9.94	0.28	1.20	± 12.0 %
835	41.5	0.90	9.48	9.48	9.48	0.58	0.80	± 12.0 %
900	41.5	0.97	9.24	9.24	9.24	0.39	0.95	± 12.0 %
1750	40.1	1.37	8.01	8.01	8.01	0.80	0.58	± 12.0 %
1900	40.0	1.40	7.66	7.66	7.66	0.33	0.91	± 12.0 %
2000	40.0	1.40	7.73	7.73	7.73	0.39	0.81	± 12.0 %
2300	39.5	1.67	7.30	7.30	7.30	0.35	0.85	± 12.0 %
2450	39.2	1.80	7.01	7.01	7.01	0.49	0.73	± 12.0 %
2600	39.0	1.96	6.92	6.92	6.92	0.50	0.74	± 12.0 %
5200	36.0	4.66	5.25	5.25	5.25	0.30	1.80	± 13.1 %
5300	35.9	4.76	5.01	5.01	5.01	0.30	1.80	± 13.1 %
5600	35.5	5.07	4.52	4.52	4.52	0.40	1.80	± 13.1 %
5800	35.3	5.27	4.50	4.50	4.50	0.40	1.80	± 13.1 %

[C] Frequency validity above 300 MHz of ± 100 MHz only applies for DASY v4.4 and higher (see Page 2), else it is restricted to ± 50 MHz. The uncertainty is the RSS of the ConvF uncertainty at calibration frequency and the uncertainty for the indicated frequency band. Frequency validity below 300 MHz is ± 10, 25, 40, 50 and 70 MHz for ConvF assessments at 30, 64, 128, 150 and 220 MHz respectively. Above 5 GHz frequency validity can be extended to ± 110 MHz.

[F] At frequencies below 3 GHz, the validity of tissue parameters (ε and σ) can be relaxed to ± 10% if liquid compensation formula is applied to measured SAR values. At frequencies above 3 GHz, the validity of tissue parameters (ε and σ) is restricted to ± 5%. The uncertainty is the RSS of the ConvF uncertainty for indicated target tissue parameters.

[G] Alpha/Depth are determined during calibration. SPEAG warrants that the remaining deviation due to the boundary effect after compensation is always less than ± 1% for frequencies below 3 GHz and below ± 2% for frequencies between 3-6 GHz at any distance larger than half the probe tip diameter from the boundary.

DASY/EASY - Parameters of Probe: EX3DV4 - SN:3819

Calibration Parameter Determined in Body Tissue Simulating Media

f (MHz) [C]	Relative Permittivity [F]	Conductivity (S/m) [F]	ConvF X	ConvF Y	ConvF Z	Alpha [G]	Depth [G] (mm)	Unct. (k=2)
750	55.5	0.96	9.55	9.55	9.55	0.26	1.23	± 12.0 %
835	55.2	0.97	9.49	9.49	9.49	0.52	0.78	± 12.0 %
900	55.0	1.05	9.24	9.24	9.24	0.70	0.68	± 12.0 %
1750	53.4	1.49	7.74	7.74	7.74	0.78	0.63	± 12.0 %
1900	53.3	1.52	7.39	7.39	7.39	0.45	0.80	± 12.0 %
2000	53.3	1.52	7.46	7.46	7.46	0.39	0.93	± 12.0 %
2300	52.9	1.81	7.21	7.21	7.21	0.67	0.69	± 12.0 %
2450	52.7	1.95	6.95	6.95	6.95	0.80	0.60	± 12.0 %
2600	52.5	2.16	6.80	6.80	6.80	0.80	0.57	± 12.0 %
5200	49.0	5.30	4.52	4.52	4.52	0.40	1.90	± 13.1 %
5300	48.9	5.42	4.37	4.37	4.37	0.40	1.90	± 13.1 %
5600	48.5	5.77	3.86	3.86	3.86	0.45	1.90	± 13.1 %
5800	48.2	6.00	4.07	4.07	4.07	0.50	1.90	± 13.1 %

[C] Frequency validity above 300 MHz of ± 100 MHz only applies for DASY v4.4 and higher (see Page 2), else it is restricted to ± 50 MHz. The uncertainty is the RSS of the ConvF uncertainty at calibration frequency and the uncertainty for the indicated frequency band. Frequency validity below 300 MHz is ± 10, 25, 40, 50 and 70 MHz for ConvF assessments at 30, 64, 128, 150 and 220 MHz respectively. Above 5 GHz frequency validity can be extended to ± 110 MHz.

[F] At frequencies below 3 GHz, the validity of tissue parameters (ε and σ) can be relaxed to ± 10% if liquid compensation formula is applied to measured SAR values. At frequencies above 3 GHz, the validity of tissue parameters (ε and σ) is restricted to ± 5%. The uncertainty is the RSS of the ConvF uncertainty for indicated target tissue parameters.

[G] Alpha/Depth are determined during calibration. SPEAG warrants that the remaining deviation due to the boundary effect after compensation is always less than ± 1% for frequencies below 3 GHz and below ± 2% for frequencies between 3-6 GHz at any distance larger than half the probe tip diameter from the boundary.

Frequency Response of E-Field

(TEM-Cell:ifi110 EXX, Waveguide: R22)

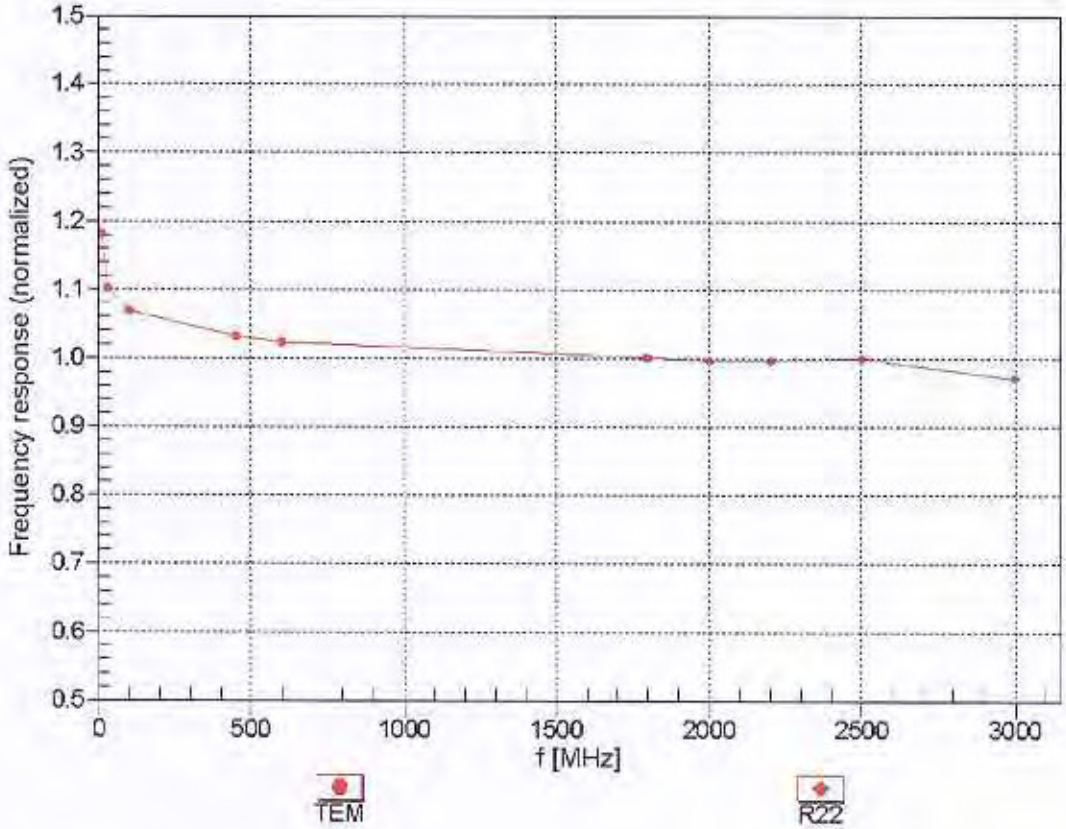

Uncertainty of Frequency Response of E-field: ± 6.3% (k=2)

Receiving Pattern (ϕ), ϑ = 0°

f=600 MHz,TEM

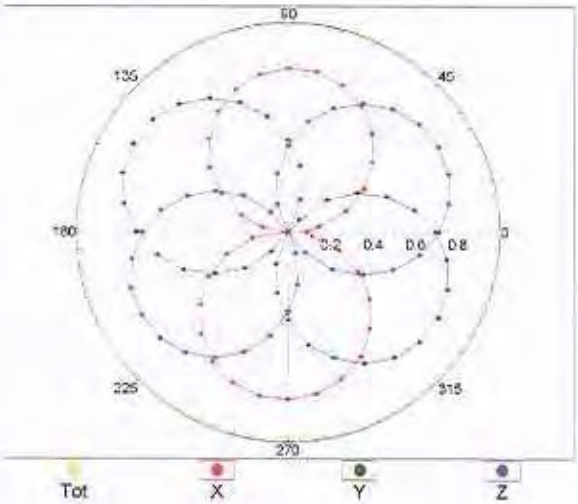

f=1800 MHz,R22

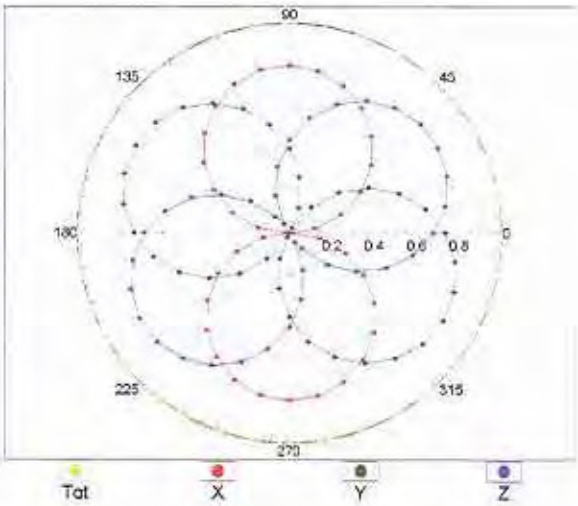

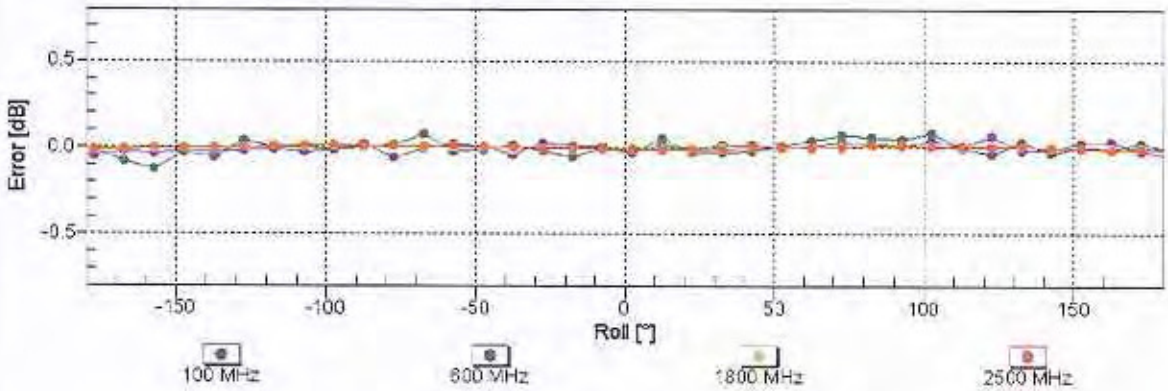

Uncertainty of Axial Isotropy Assessment: ± 0.5% (k=2)

Dynamic Range f(SAR_{head})
(TEM cell , f_{eval}= 1900 MHz)

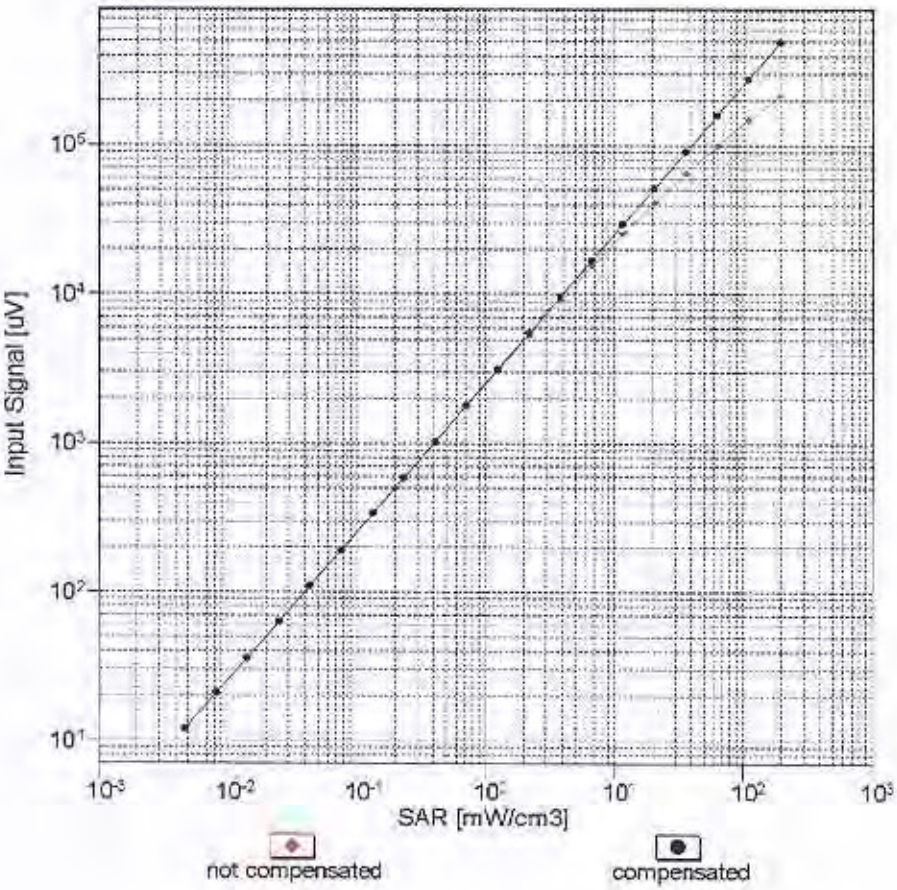

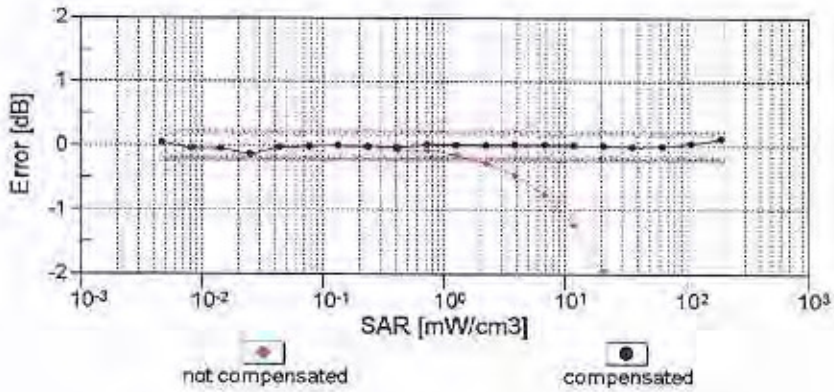

Uncertainty of Linearity Assessment: ± 0.6% (k=2)

Conversion Factor Assessment

f = 835 MHz,WGLS R9 (H_convF)

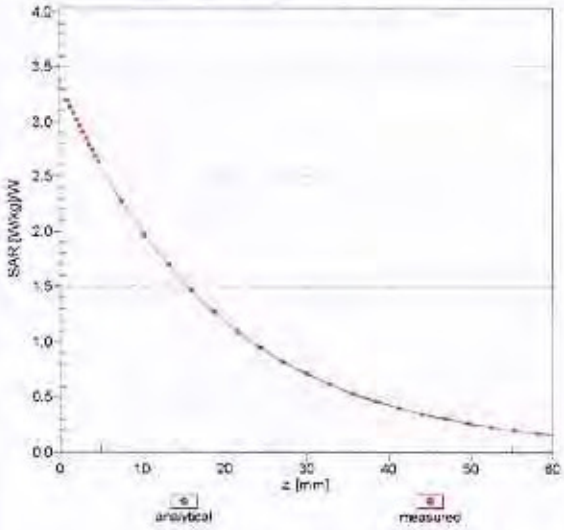

f = 1900 MHz,WGLS R22 (H_convF)

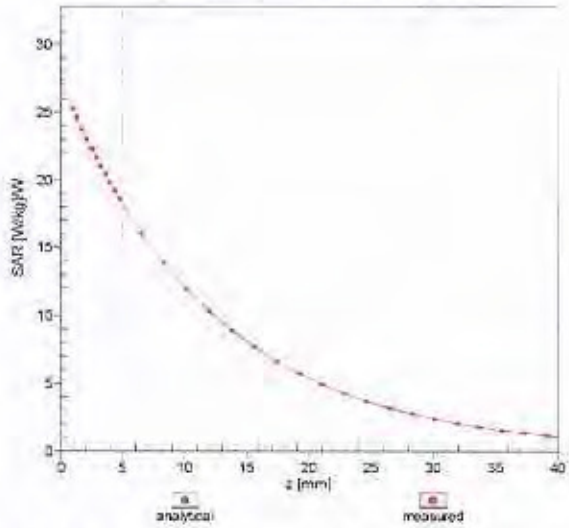

Deviation from Isotropy in Liquid

Error (ϕ, ϑ), f = 900 MHz

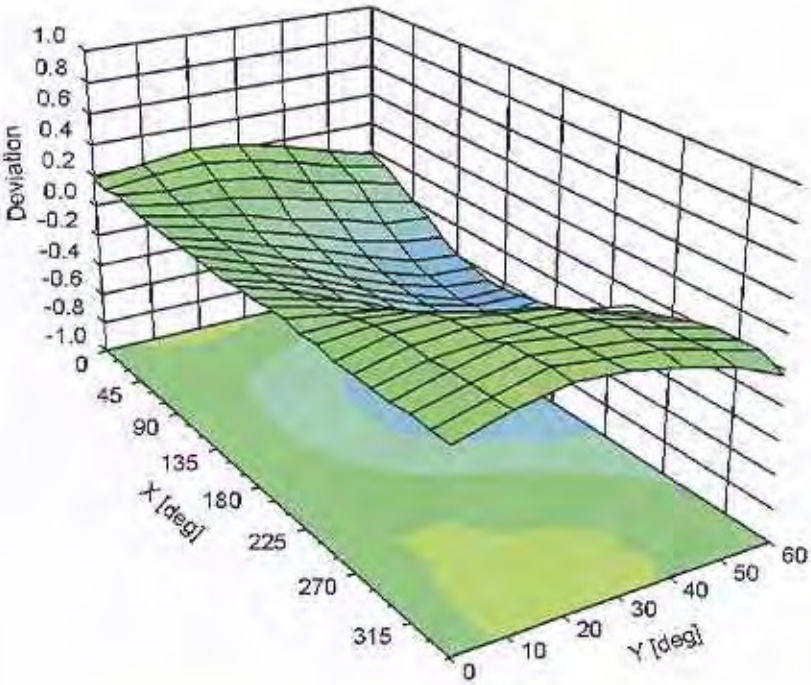

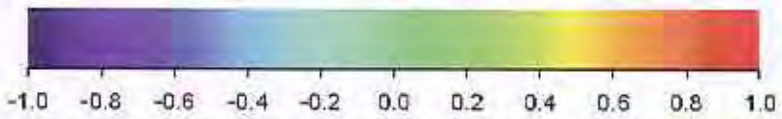

Uncertainty of Spherical Isotropy Assessment: ± 2.6% (k=2)

DASY/EASY - Parameters of Probe: EX3DV4 - SN:3819

Other Probe Parameters

Sensor Arrangement	Triangular
Connector Angle (°)	-67.4
Mechanical Surface Detection Mode	enabled
Optical Surface Detection Mode	disabled
Probe Overall Length	337 mm
Probe Body Diameter	10 mm
Tip Length	9 mm
Tip Diameter	2.5 mm
Probe Tip to Sensor X Calibration Point	1 mm
Probe Tip to Sensor Y Calibration Point	1 mm
Probe Tip to Sensor Z Calibration Point	1 mm
Recommended Measurement Distance from Surface	1.4 mm