EN/LZT 108 4791/2

BLUETOOTH LOCAL INFOTAINMENT POINT, blip C11 White Paper

ERICSSON

Ericsson is the leading provider in the new telecoms world, with communications solutions that combine telecom and datacom technologies with freedom of mobility for the user. With more than 100,000 employees in 140 countries, Ericsson simplifies communications for its customers – network operators, service providers, enterprises and consumers – the world over.

First edition (March 2001)

Publication number: EN/LZT 108 4791/2

This document is published by **Ericsson Microwave Systems AB**, without any warranty. Improvements and changes to this text necessitated by typographical errors, inaccuracies of current information or improvements to programs and/or equipment, may be made by **Ericsson Microwave Systems AB** at any time without notice. Such changes will, however, be incorporated into new editions of this document. Any hard copies of this document are to be regarded as temporary reference copies only.

All rights reserved.

© Ericsson Microwave Systems AB, 2001

Contents

PREFACE 5
Purpose of this Document 5

PRODUCT OVERVIEW 6

BLUETOOTH WIRELESS TECHNOLOGY 7
General 7
Bluetooth wireless technology in blip C11 8

CONFIGURATIONS 9
Stand-alone capacity 9
Network data storage 9
LAN and Internet access 9
Control 9
Wireless connection 9

APPLICATION AREAS FOR BLIP C11 10
Advertising 10
Entertainment 10
Lecturing 10
Flight information 10
Ordering 10
Orientation 10
Measuring 10

PRODUCT FEATURES 11
Standard application **Error! Bookmark not defined.**
Autostart 11
Bootloader 11
Maintenance tool 11

CREATING APPLICATIONS WITH BLIP C11 12
Programming language 12
Development Platform 12
Debugging applications 12
Software architecture 13
Hardware architecture 14
Bluetooth qualification 14

TERMINOLOGY AND ABRIVATIONS 15

RELATED INFORMATION 16
Documents 16
Links 16
Trademarks and acknowledgements 16

TECHNICAL SPECIFICATIONS 17
General 17
Exterior description 17
Ambient Temperatures 17
Processor and memory 17
Bluetooth Wireless Technology Technical data 17
Ethernet interface 18
Serial cable “RS232” interface 18

blip C11 device power interface 18
Light interface 18
AC/DC-adapter 18

PREFACE

Purpose of this Document

The Ericsson blip C11 White paper is designed to give the reader a deeper technical understanding of how the blip C11 is designed, and how it interacts with other media. This document will make it easier to integrate the blip C11 with the IT and communications solutions of a company or organization.

People who can benefit from this document include:

- Corporate buyers
- IT professionals
- Software developers
- Support engineers
- Business decision-makers

More information about BLIP may also be found at the site http://www.ericsson.com/blip.

PRODUCT OVERVIEW

Bluetooth™ Local Infotainment Point, blip C11, is a server to which terminals such as mobile phones and palmtops may connect to in order to get information, leave messages, play games, control other devices etc.

blip C11 is a small communication platform with built-in Bluetooth wireless technology, high-speed data, Ethernet, RS232 and stand-alone capacity. blip C11 provides a platform on which a wide range of applications may run. The operating system used is a derivative of the popular Linux operating system.

blip C11 comes with a maintenance tool called blip Manager that simplifies management of blip C11 in a network. From the blip Manager data and applications may be downloaded to the blip C11 infotainments points in the network, data gathered by the infotainment points may also be fetched by the blip Manager.

blip C11 is designed to attract application developers. The software development kit (blip C11 SDK) is mostly based on royalty free open source software.

BLUETOOTH WIRELESS TECHNOLOGY

General

blip C11 has built-in *Bluetooth* wireless technology, which operates in a globally available 2.4 Ghz radio frequency band, and ensures fast and secure communications up to a range of 10 meters between devices. Please note that in some countries the *Bluetooth* wireless technology is not allowed due to local radio regulations.

Bluetooth wireless technology facilitates high-quality voice and data transmissions. It is designed to be fully functional even in very noisy radio frequency environments, and its voice transmissions are audible under severe conditions.

Ericsson is a founding partner of the *Bluetooth* Special Interest Group (SIG). Bluetooth devices that are expected to be available in the near future, include:

- Headsets for wireless voice transmission and remote call control.
- PCs, laptops, PDAs, palmpads for datatransfer, synchronization etc.
- MP3 music player
- Other phones for exchanging business cards, ring signals, playing games etc
- Digital still and movie cameras
- Printers, hard disks and other storage devices
- Handheld scanners for text, barcode and images
- Household appliances with built-in logic, as well as games and entertainment devices
- Access points in hotel lobbies and airports for connecting to computer networks and the Internet.
- Infotainment points in shops, fairs and advertisement pillars

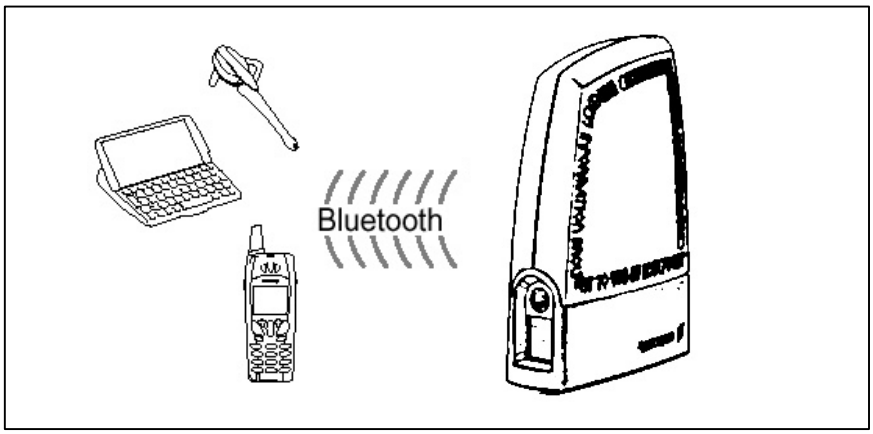

Bluetooth wireless technology in blip C11

The Bluetooth wireless technology in blip is divided into two parts. First there is the basic part that include the radio, the antenna, the baseband and the link-manager. This part provides the main functionality of the Bluetooth wireless technology. The other part is the Bluetooth Host Stack from Ericsson. The host stack is a realization of the upper protocols defined by the Bluetooth specification.

The Bluetooth wireless technology provides two types of communication channels. One is designed for transmitting data and the other is designed for voice transmission. blip C11 supports both the voice and data channel.

New Bluetooth applications created for blip C11 must be qualified by the Bluetooth SIG.

CONFIGURATIONS

Stand-alone capacity

blip C11 has enough memory and data capacity to run applications such as embedded web servers without having to be connected to a computer network. Note that in this case are the web contents stored in blip C11. Only power connection is needed to make blip work stand-alone.

Network data storage

blip C11 may run the Network File System protocol (NFS) so that data may be stored and retrieved from a computer network. This is an advantage if there is very much data that shall be handled by the blip C11 application. For such configuration blip C11 should be connected to the network through the Ethernet interface.

LAN and Internet access

blip C11 may run applications that give the users that connects with the blip C11 access to a local area network (LAN) and even to Internet.

Control

blip C11 may be connected to other devices such as computers, printers, measuring equipment, etc, so that a user with a terminal featuring Bluetooth wireless technology can remotely monitor and control the device.

Wireless connection

blip C11 may be used to replace cables. In many places and situations it is preferred to have a wireless connection instead of cables.

APPLICATION AREAS FOR BLIP C11

blip C11 may be used for a wide range of applications. This chapter will only give a few examples of applications that blip C11 can be used for as example for third party application developers.

Advertising

blip C11 is ideal for advertisement because it provides a cheap and simple way to get a message out to people in the vicinity. Because the information may be interactive much more information may be sent out compared with an advertising poster that is rather restricted in the amount of information that it may send out. By getting people to interact message penetration may also be measured.

blip C11 may be placed almost anywhere in a shopping mall it may also be placed in shop windows so people on the street may interact with it.

Entertainment

blip C11 may run an application that makes it a game server i.e. many terminals may connect to blip C11 and join the same game.

blip C11 could host crosswords that people could download to their terminals. The next time they come to the blip C11 they may get the crossword corrected.

blip C11 could be used at museums as an interactive guide.

Lecturing

blip C11 may be used for temporary connection of devices.

blip C11 may be used to control presentations.

Flight information

At airports blip C11 may guide travelers to their gates.

Ordering

blip C11 may be used for ordering in restaurants etc.

Orientation

In big stores and at fairs blip C11 may be used to help people find specific articles etc.

Measuring

blip C11 may be used for connecting measuring equipment.

PRODUCT FEATURES

Autostart

blip C11 is automatically reset and started when powered on.

Bootloader

blip C11 contains a write protected bootloader. The bootloader is used for downloading the operating system. Applications that don't require an operating system may also be downloaded with the bootloader. The bootloader may also be used for reading out identifications such as product numbers and individual numbers. To communicate with the bootloader a GDB debugger is used that issue GDB commands using the "remote GDB protocol" over the RS232 interface, i.e. no other communication protocols such as PPP, IP or UDP is involved. Connection to the Bootloader is only possible during the startup of blip C11, details of how to connect may be found in the SDK documentation.

Maintenance tool

blip C11 comes with a maintenance tool called blip Manager. blip Manager is a window based tool that uses the File Transfer Protocol (ftp) and some blip specific commands to maintain the application and data files stored on blip C11. blip Manager may be used to maintain blip C11 connected to a Local Area Network (LAN) and blip C11 connected by the RS232 interface. blip Manager will automatically show the status of the blip C11 that is connected to the network. If a new blip C11 is connected to the network than will it automatically be showed one of the blip Managers windows.

CREATING APPLICATIONS FOR BLIP C11

For application development a Software Developers Kit is available from the Ericsson. The blip SDK includes

- An operating system called µClinux. The operating system is a derivative of the commonly known Linux operating system and it is intended for microcontrollers without Memory Management Units (MMU).
- Drivers for timers, interrupts, serial ports, file systems, Ethernet etc
- A C function library, µClibc
- Bluetooth Host Stack from Ericsson
- The GNU compiler collection, GCC
- The GNU debugger with graphical front end extensions, GDB / Insight

Programming language

The programming languages supported by the blip SDK is C.

Development Platform

System requirements:

- Host pc running x86-linux (libc6 or greater) configured for development (make is needed together with a shell like bash or tcsh)
- CD-ROM drive
- 32MB or more of RAM
- Approx 90-150MB free disk space (depending on the install options chosen!)
- RPM
- 1 free serial port
- 10BaseT Ethernet

Debugging applications

Applications may be debugged during development with the GDB / Insight debugger. This may be done over the Ethernet interface or the RS232 interface.

For the Ethernet interface the protocol stack in the figure below is used.

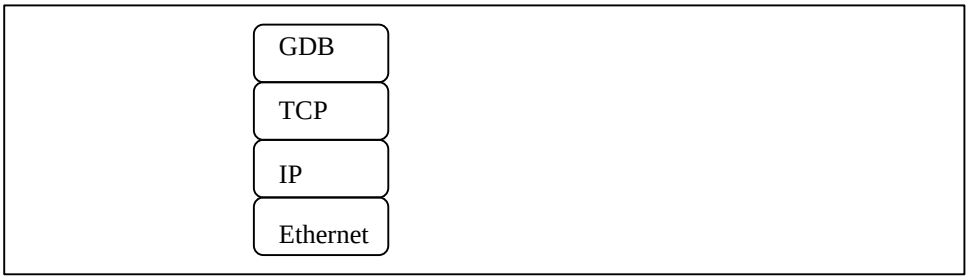

And for the RS232 interface the protocol stack in the figure below is used

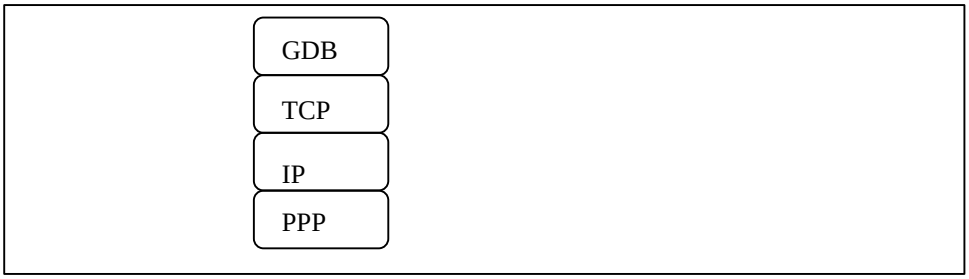

Software architecture

The figure below shows the software architecture

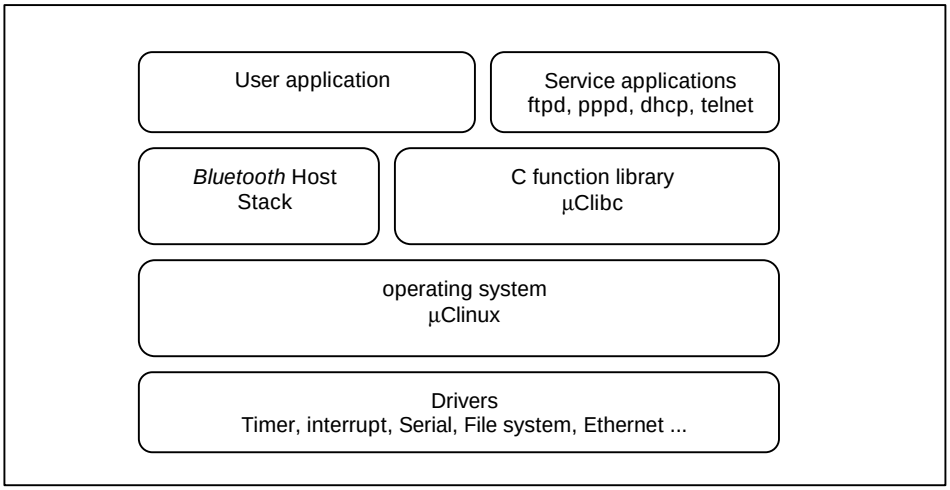

Hardware architecture

The figure below shows the hardware architecture

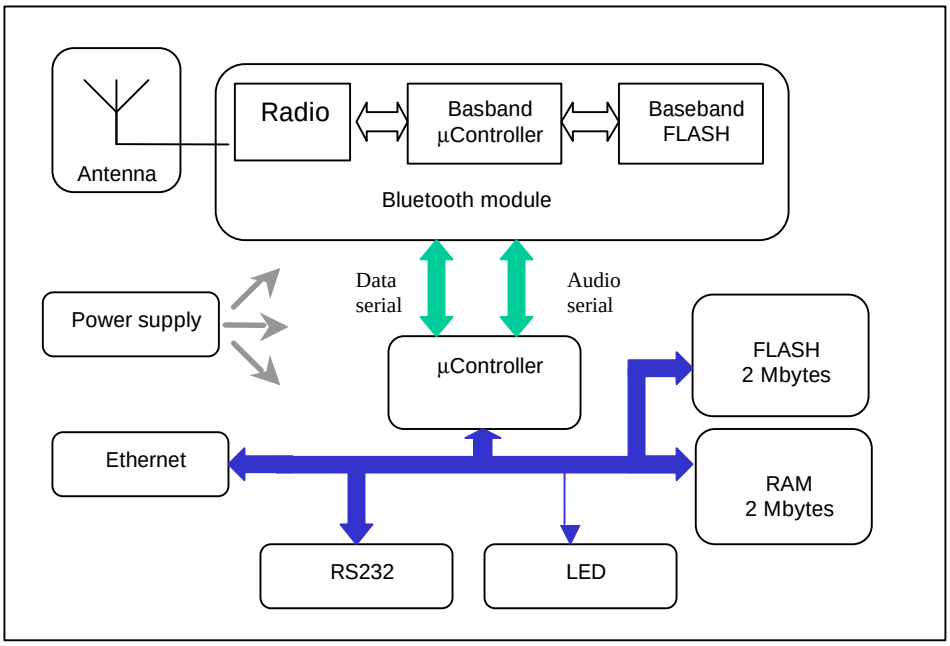

Bluetooth qualification

New applications for the blip C11 platform must be qualified by SIG if they make use of the Bluetooth wireless technology.

TERMINOLOGY AND ABRIVATIONS

BLIP	Bluetooth Local Infotainment Point
CGI	Common Gateway Interface
FTP	File Transfer Protocol
GCC	GNU Compiler Collection
GDB	GNU Debugger
GNU	GNU is a recursive acronym for `’GNU's Not Unix’’
HTML	HyperText Markup Language
IP	Internet Protocol
LED	Light Emitting Diode
NFS	Network File System
LAN	Local Area Network
MMU	Memory Management Unit
PDA	Personal Digital Assistant
PPP	Point to Point Protocol
SDK	Software Development Kit
SIG	Bluetooth Special Interest Group
UDP	User Datagram Protocol

RELATED INFORMATION

Documents

- BLIP Toolset Software Developer's Kit

Links

- http://www.ericsson.com/blip
- http://www.bluetooth.com
- http://www.uclinux.org

Trademarks and acknowledgements

The BLUETOOTH trademarks are owned by Bluetooth SIG, Inc., U.S.A. and used by Ericsson under license.

Microsoft, Windows, Windows NT are registered trademarks or trademarks of Microsoft Corporation.

TECHNICAL SPECIFICATIONS

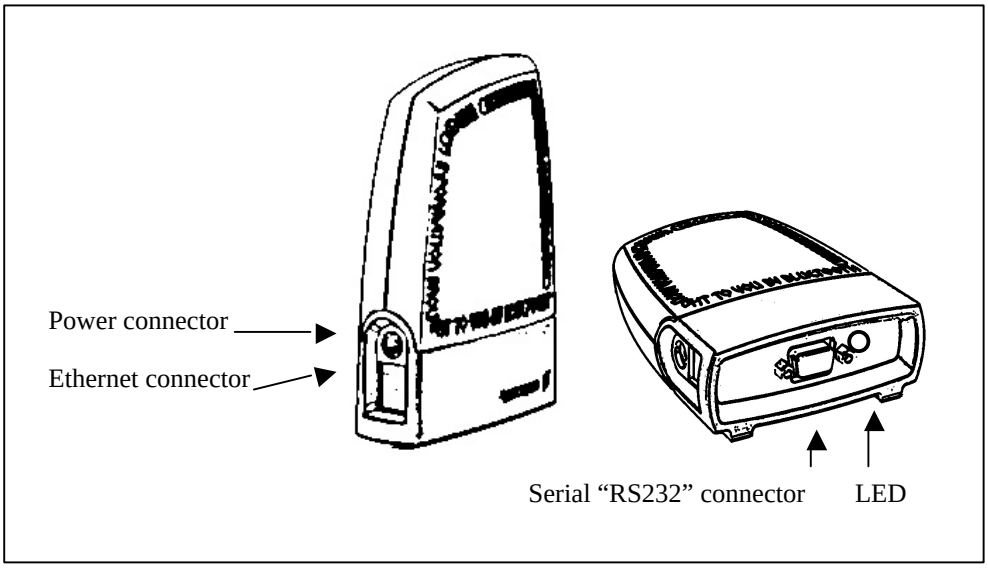

General

Product name	blip C11

Exterior description

Size	117 x 88 x 32 mm
Weight	0.2 kg
Colour	Machine beige

Ambient Temperatures

Operating	Max: +65 °C, Min: +5 °C
Storage	Max: +45 °C, Min: -5 °C

Processor and memory

Dimension	Support in blip C11
Host processor	ARM7 TDMI based 32-bit RISC at 22.5 MHz
FLASH memory	2 Mbytes
RAM	2 Mbytes

Bluetooth Wireless Technology Technical data

Dimension	Support in blip C11
Bluetooth capability statement	This product is manufactured to meet Bluetooth specification 1.0b
Bluetooth functions	Profile support is depending on applications

Coverage area	Up to 10 meters (33 feet)
Transmission power	1 mW (0 dBm)
Frequency band	2.4 GHz • The unlicensed ISM band.
Max data transmission rate	723.2 kbps

Ethernet interface

Dimension	**blip C11**
Type	10BASE-T (10 Mbps)
Connector	8-pin RJ45 boot connector
Max data transmission rate	10 Mbps

Serial cable “RS232” interface

Dimension	**blip C11**
Connector	9-pin D-sub female, DCE
Data transmission rate	9600, 14400, 19200, 38400, 57600 and 115200 bps
Used pins	2, 3, 5, 7 and 8 the other pins are properly terminated.

blip C11 device power interface

Dimension	**blip C11**
Nominal voltage	5 V
Operational voltage	4.5 V – 15 V
Power consumption	<1.5 W
Connector	2.1 mm pin connector with plus in middle

Light interface

Dimension	**blip C11**
LED colour	Green

AC/DC-adapter

Dimension	**blip C11**
Input voltage	100 VAC – 240 VAC
Frequency	50 Hz – 60 Hz
Output voltage	5 V