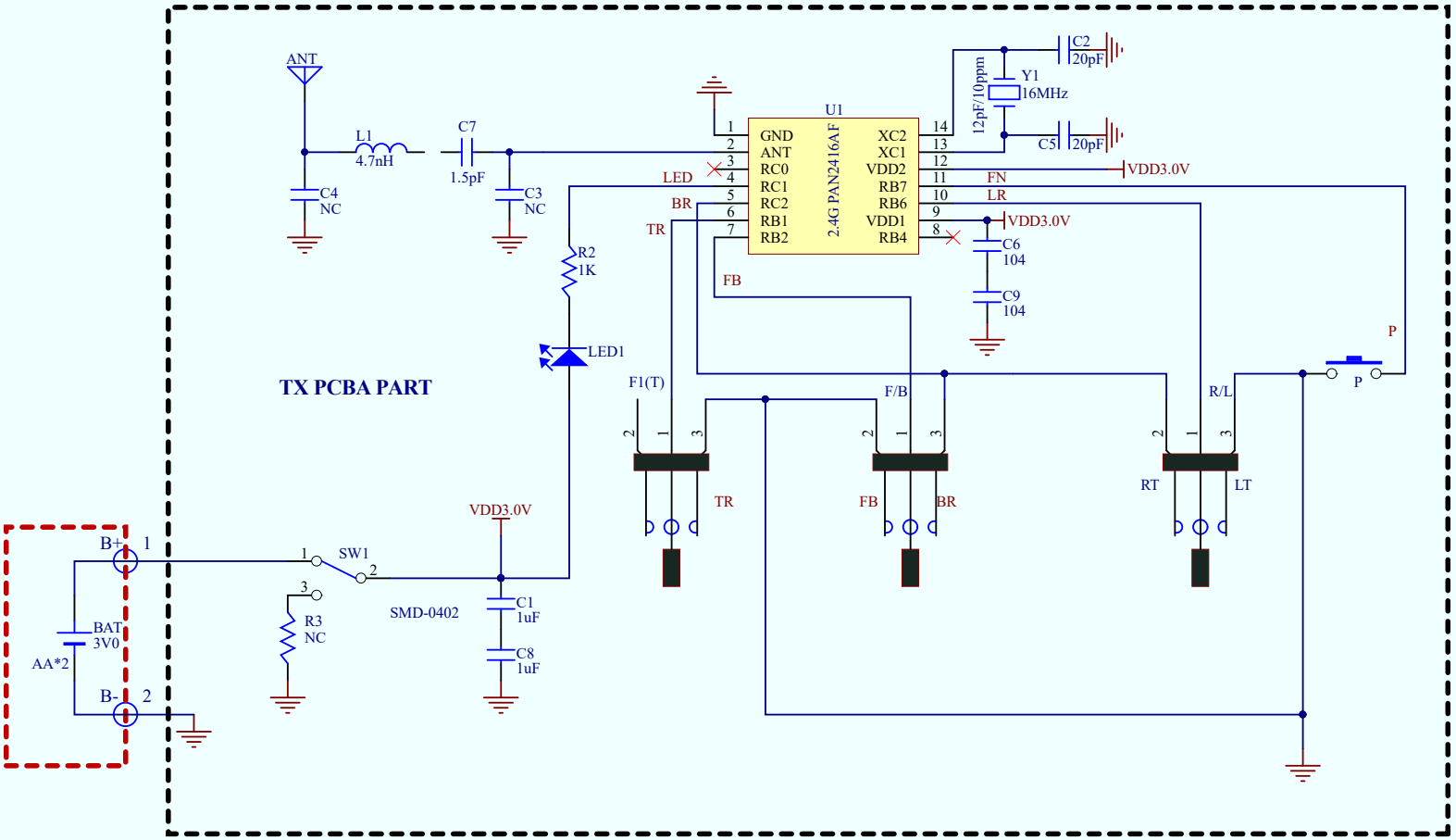20-24886 2.4GHz TX CIRCUIT DIAGRAM