System Check_Head_750MHz

DUT: D750V3-1107

Communication System: CW ; Frequency: 750 MHz;Duty Cycle: 1:1
Medium: HSL_750_210224 Medium parameters used: f = 750 MHz; σ = 0.905 S/m; ε_r = 41.477; ρ = 1000 kg/m^3
Ambient Temperature：23.7 ℃; Liquid Temperature：22.7 ℃

DASY5 Configuration:
- Probe: EX3DV4 - SN3931; ConvF(10.19, 10.19, 10.19) @ 750 MHz; Calibrated: 2020/10/22
- Sensor-Surface: 1.4mm (Mechanical Surface Detection)
- Electronics: DAE4 Sn913; Calibrated: 2020/5/6
- Phantom: SAM-Middle; Type: SAM; Serial: TP-1503
- Measurement SW: DASY52, Version 52.10 (4);SEMCAD X Version 14.6.14 (7483)

Pin=250mW/Area Scan (61x61x1): Interpolated grid: dx=1.500 mm, dy=1.500 mm
Maximum value of SAR (interpolated) = 2.44 W/kg

Pin=250mW/Zoom Scan (5x5x7)/Cube 0: Measurement grid: dx=8mm, dy=8mm, dz=5mm
Reference Value = 52.76 V/m; Power Drift = -0.10 dB
Peak SAR (extrapolated) = 2.89 W/kg
SAR(1 g) = 1.99 W/kg; SAR(10 g) = 1.34 W/kg
Maximum value of SAR (measured) = 2.48 W/kg

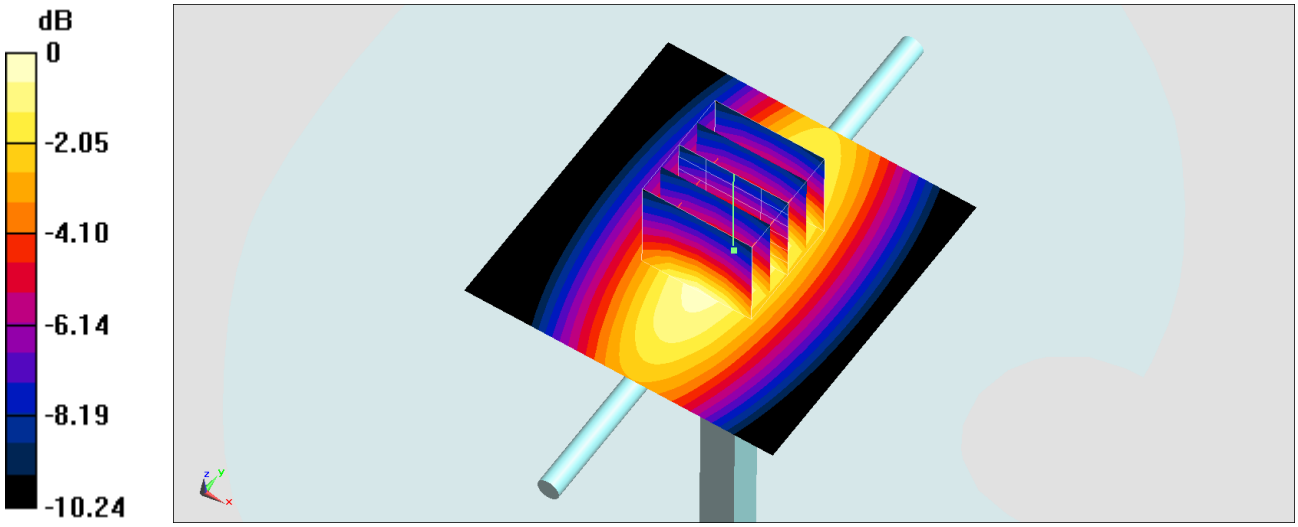

0 dB = 2.44 W/kg = 3.87 dBW/kg

System Check_Head_835MHz

DUT: D835V2-4d167

Communication System: CW; Frequency: 835 MHz;Duty Cycle: 1:1
Medium: HSL_850_210224 Medium parameters used: f = 835 MHz; σ = 0.917 S/m; ε_r = 41.772; ρ = 1000 kg/m^3
Ambient Temperature：23.7 ℃; Liquid Temperature：22.7 ℃

DASY5 Configuration:
- Probe: EX3DV4 - SN3931; ConvF(9.81, 9.81, 9.81) @ 835 MHz; Calibrated: 2020/10/22
- Sensor-Surface: 1.4mm (Mechanical Surface Detection)
- Electronics: DAE4 Sn913; Calibrated: 2020/5/6
- Phantom: SAM-Middle; Type: SAM; Serial: TP-1503
- Measurement SW: DASY52, Version 52.10 (4);SEMCAD X Version 14.6.14 (7483)

Pin=50mW/Area Scan (61x61x1): Interpolated grid: dx=1.500 mm, dy=1.500 mm
Maximum value of SAR (interpolated) = 0.689 W/kg

Pin=50mW/Zoom Scan (5x5x7)/Cube 0: Measurement grid: dx=8mm, dy=8mm, dz=5mm
Reference Value = 28.78 V/m; Power Drift = -0.19 dB
Peak SAR (extrapolated) = 0.788 W/kg
SAR(1 g) = 0.502 W/kg; SAR(10 g) = 0.322 W/kg
Maximum value of SAR (measured) = 0.689 W/kg

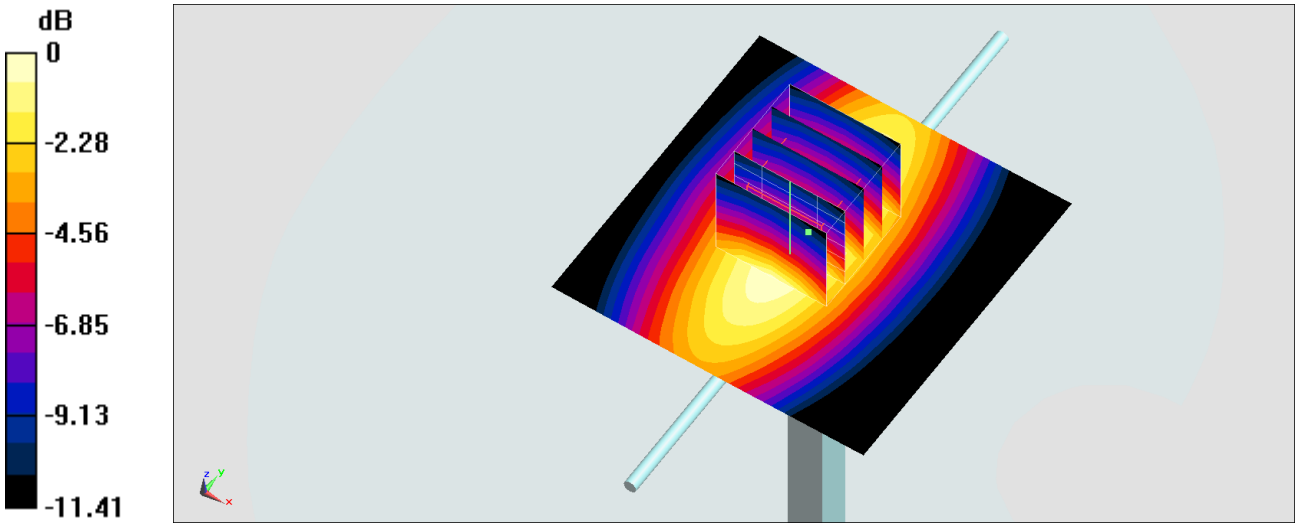

0 dB = 0.689 W/kg = -1.62 dBW/kg

System Check_Head_1900MHz

DUT: D1900V2-5d041

Communication System: CW; Frequency: 1900 MHz;Duty Cycle: 1:1
Medium: HSL_1900_210223 Medium parameters used: f = 1900 MHz; σ = 1.456 S/m; ε_r = 40.204; ρ = 1000 kg/m^3
Ambient Temperature：23.5 ℃; Liquid Temperature：22.5 ℃

DASY5 Configuration:
- Probe: EX3DV4 - SN3931; ConvF(8.15, 8.15, 8.15) @ 1900 MHz; Calibrated: 2020/10/22
- Sensor-Surface: 1.4mm (Mechanical Surface Detection)
- Electronics: DAE4 Sn913; Calibrated: 2020/5/6
- Phantom: SAM-Middle; Type: SAM; Serial: TP-1503
- Measurement SW: DASY52, Version 52.10 (4);SEMCAD X Version 14.6.14 (7483)

Pin=50mW/Area Scan (61x61x1): Interpolated grid: dx=1.500 mm, dy=1.500 mm
Maximum value of SAR (interpolated) = 3.39 W/kg

Pin=50mW/Zoom Scan (5x5x7)/Cube 0: Measurement grid: dx=8mm, dy=8mm, dz=5mm
Reference Value = 48.95 V/m; Power Drift = -0.11 dB
Peak SAR (extrapolated) = 4.19 W/kg
SAR(1 g) = 2.15 W/kg; SAR(10 g) = 1.09 W/kg
Maximum value of SAR (measured) = 3.46 W/kg

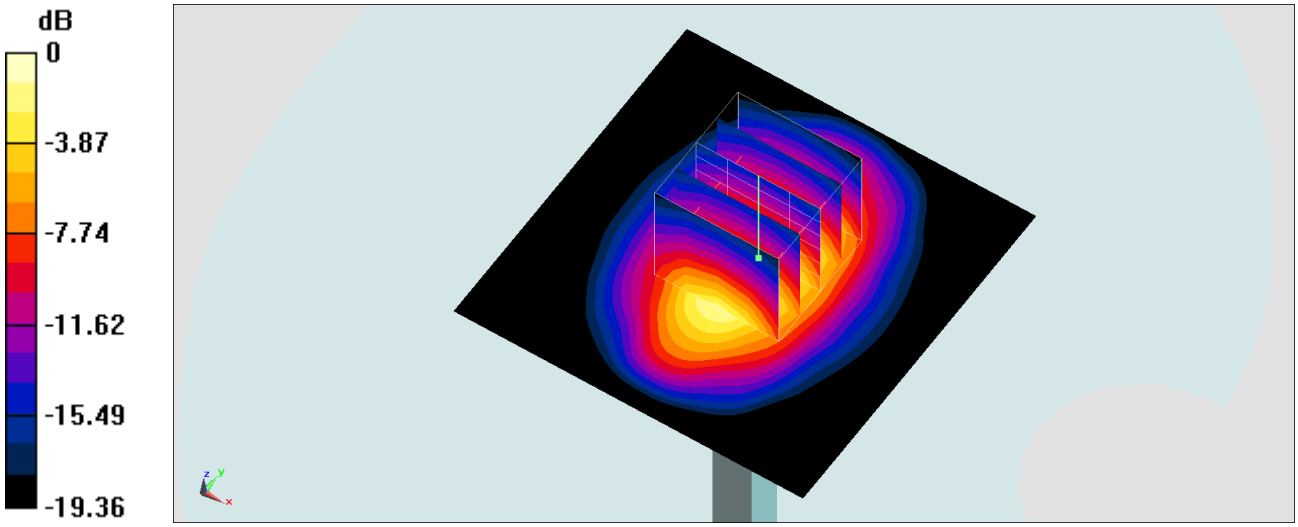

0 dB = 3.46 W/kg = 5.39 dBW/kg

System Check_Head_2600MHz

DUT: D2600V2-1078

Communication System: CW; Frequency: 2600 MHz;Duty Cycle: 1:1
Medium: HSL_2600_210222 Medium parameters used: f = 2600 MHz; σ = 2.017 S/m; ε_r = 38.949; ρ = 1000 kg/m^3
Ambient Temperature：23.6 ℃; Liquid Temperature：22.6 ℃

DASY5 Configuration:
- Probe: EX3DV4 - SN3931; ConvF(7.37, 7.37, 7.37) @ 2600 MHz; Calibrated: 2020/10/22
- Sensor-Surface: 1.4mm (Mechanical Surface Detection)
- Electronics: DAE4 Sn913; Calibrated: 2020/5/6
- Phantom: SAM-Middle; Type: SAM; Serial: TP-1503
- Measurement SW: DASY52, Version 52.10 (4);SEMCAD X Version 14.6.14 (7483)

Pin=50mW/Area Scan (71x71x1): Interpolated grid: dx=1.200 mm, dy=1.200 mm
Maximum value of SAR (interpolated) = 5.03 W/kg

Pin=50mW/Zoom Scan (7x7x7)/Cube 0: Measurement grid: dx=5mm, dy=5mm, dz=5mm
Reference Value = 50.13 V/m; Power Drift = -0.09 dB
Peak SAR (extrapolated) = 6.10 W/kg
SAR(1 g) = 2.99 W/kg; SAR(10 g) = 1.39 W/kg
Maximum value of SAR (measured) = 4.99 W/kg

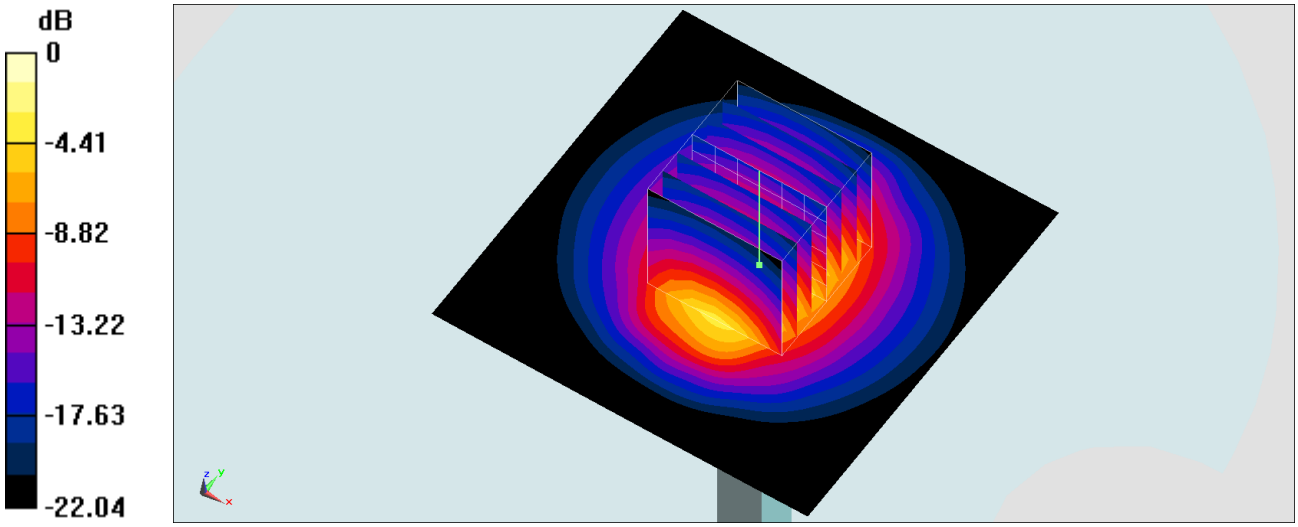

0 dB = 4.99 W/kg = 6.98 dBW/kg

Test Laboratory: Sporton International Inc. SAR/HAC Testing Lab Date: 2021/3/29

System Check_Head_2600MHz

DUT: D2600V2-1078

Communication System: CW; Frequency: 2600 MHz;Duty Cycle: 1:1
Medium: HSL_2600_210329 Medium parameters used: f = 2600 MHz; σ = 1.961 S/m; ε_r = 38.369; ρ = 1000 kg/m^3
Ambient Temperature：23.4 ℃; Liquid Temperature：22.4 ℃

DASY5 Configuration:
- Probe: ES3DV3 - SN3184; ConvF(4.47, 4.47, 4.47) @ 2600 MHz; Calibrated: 2020/9/23
- Sensor-Surface: 3mm (Mechanical Surface Detection)
- Electronics: DAE4 Sn778; Calibrated: 2020/6/4
- Phantom: SAM_Left; Type: SAM; Serial: 1796
- Measurement SW: DASY52, Version 52.10 (4);SEMCAD X Version 14.6.14 (7483)

Pin=250mW/Area Scan (81x81x1): Interpolated grid: dx=1.200 mm, dy=1.200 mm
Maximum value of SAR (interpolated) = 19.7 W/kg

Pin=250mW/Zoom Scan (7x7x7)/Cube 0: Measurement grid: dx=5mm, dy=5mm, dz=5mm
Reference Value = 104.4 V/m; Power Drift = -0.08 dB
Peak SAR (extrapolated) = 29.5 W/kg
SAR(1 g) = 14.9 W/kg; SAR(10 g) = 6.91 W/kg
Maximum value of SAR (measured) = 19.7 W/kg

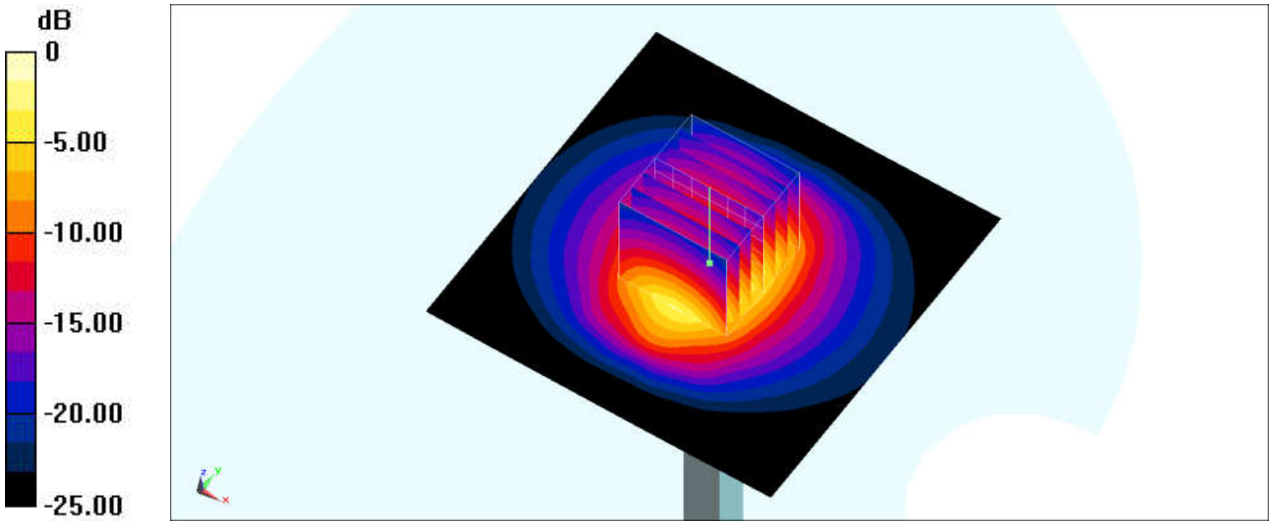

0 dB = 19.7 W/kg = 12.94 dBW/kg

System Check_Head_2600MHz

DUT: D2600V2-1008

Communication System: CW; Frequency: 2600 MHz;Duty Cycle: 1:1
Medium: HSL_2600_210406 Medium parameters used: f = 2600 MHz; σ = 1.969 S/m; ε_r = 39.21; ρ = 1000 kg/m^3
Ambient Temperature：23.6 ℃; Liquid Temperature：22.6 ℃

DASY5 Configuration:
- Probe: EX3DV4 - SN3642; ConvF(6.95, 6.95, 6.95) @ 2600 MHz; Calibrated: 2020/4/29
- Sensor-Surface: 1.4mm (Mechanical Surface Detection)
- Electronics: DAE4 Sn1647; Calibrated: 2021/1/7
- Phantom: SAM-Middle; Type: SAM; Serial: TP-1503
- Measurement SW: DASY52, Version 52.10 (4);SEMCAD X Version 14.6.14 (7483)

Pin=50mW/Area Scan (71x71x1): Interpolated grid: dx=1.200 mm, dy=1.200 mm
Maximum value of SAR (interpolated) = 4.45 W/kg

Pin=50mW/Zoom Scan (7x7x7)/Cube 0: Measurement grid: dx=5mm, dy=5mm, dz=5mm
Reference Value = 49.93 V/m; Power Drift = -0.12 dB
Peak SAR (extrapolated) = 5.50 W/kg
SAR(1 g) = 2.69 W/kg; SAR(10 g) = 1.24 W/kg
Maximum value of SAR (measured) = 4.49 W/kg

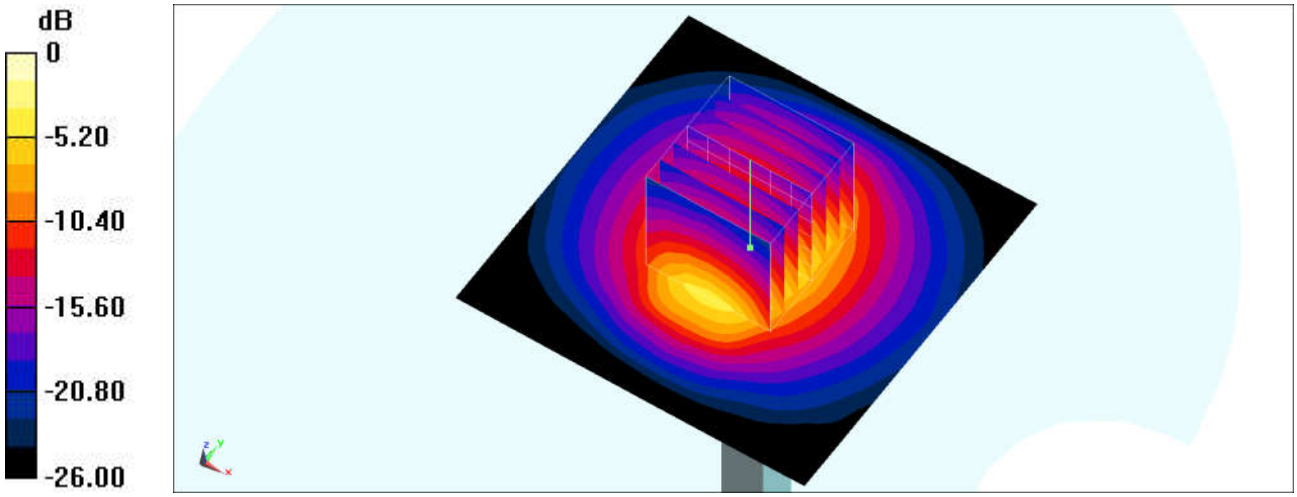

0 dB = 4.49 W/kg = 6.52 dBW/kg

System Check_Head_2600MHz

DUT: D2600V2-1078

Communication System: CW; Frequency: 2600 MHz;Duty Cycle: 1:1
Medium: HSL_2600_210420 Medium parameters used: f = 2600 MHz; σ = 1.995 S/m; ε_r = 38.039; ρ = 1000 kg/m^3
Ambient Temperature：23.6 ℃; Liquid Temperature：22.6 ℃

DASY5 Configuration:
- Probe: ES3DV3 - SN3184; ConvF(4.47, 4.47, 4.47) @ 2600 MHz; Calibrated: 2020/9/23
- Sensor-Surface: 3mm (Mechanical Surface Detection)
- Electronics: DAE4 Sn778; Calibrated: 2020/6/4
- Phantom: SAM_Left; Type: SAM; Serial: 1796
- Measurement SW: DASY52, Version 52.10 (4);SEMCAD X Version 14.6.14 (7483)

Pin=250mW/Area Scan (71x71x1): Interpolated grid: dx=1.200 mm, dy=1.200 mm
Maximum value of SAR (interpolated) = 19.9 W/kg

Pin=250mW/Zoom Scan (7x7x7)/Cube 0: Measurement grid: dx=5mm, dy=5mm, dz=5mm
Reference Value = 96.15 V/m; Power Drift = -0.09 dB
Peak SAR (extrapolated) = 24.5 W/kg
SAR(1 g) = 14 W/kg; SAR(10 g) = 6.6 W/kg
Maximum value of SAR (measured) = 18.3 W/kg

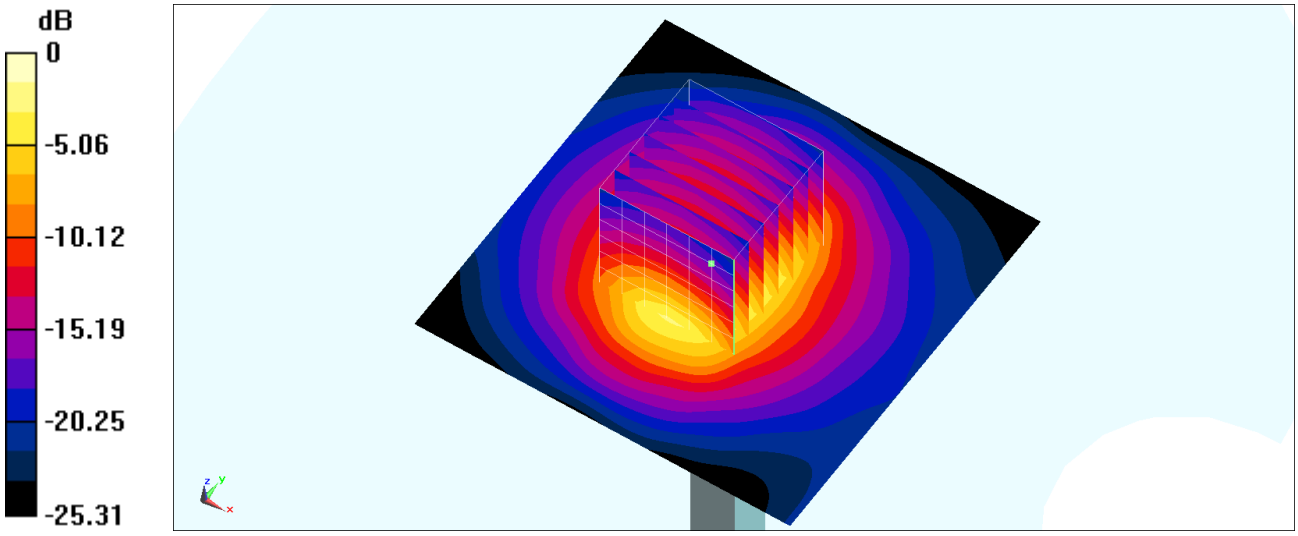

0 dB = 18.3 W/kg = 12.62 dBW/kg

System Check_Head_3500MHz

DUT: D3500V2-1014

Communication System: CW; Frequency: 3500 MHz;Duty Cycle: 1:1
Medium: HSL_3500_210225 Medium parameters used: f = 3500 MHz; σ = 2.973 S/m; ε_r = 38.113; ρ = 1000 kg/m^3
Ambient Temperature：23.6 ℃; Liquid Temperature：22.6 ℃

DASY5 Configuration:
- Probe: EX3DV4 - SN3931; ConvF(7.12, 7.12, 7.12) @ 3500 MHz; Calibrated: 2020/10/22
- Sensor-Surface: 1.4mm (Mechanical Surface Detection)
- Electronics: DAE4 Sn913; Calibrated: 2020/5/6
- Phantom: SAM_Left; Type: QD000P40CD; Serial: TP:1477
- Measurement SW: DASY52, Version 52.10 (4);SEMCAD X Version 14.6.14 (7483)

Pin=50mW/Area Scan (61x61x1): Interpolated grid: dx=1.200 mm, dy=1.200 mm
Maximum value of SAR (interpolated) = 6.24 W/kg

Pin=50mW/Zoom Scan (7x7x7)/Cube 0: Measurement grid: dx=5mm, dy=5mm, dz=1.4mm
Reference Value = 47.75 V/m; Power Drift = 0.11 dB
Peak SAR (extrapolated) = 9.80 W/kg
SAR(1 g) = 3.56 W/kg; SAR(10 g) = 1.35 W/kg
Maximum value of SAR (measured) = 7.07 W/kg

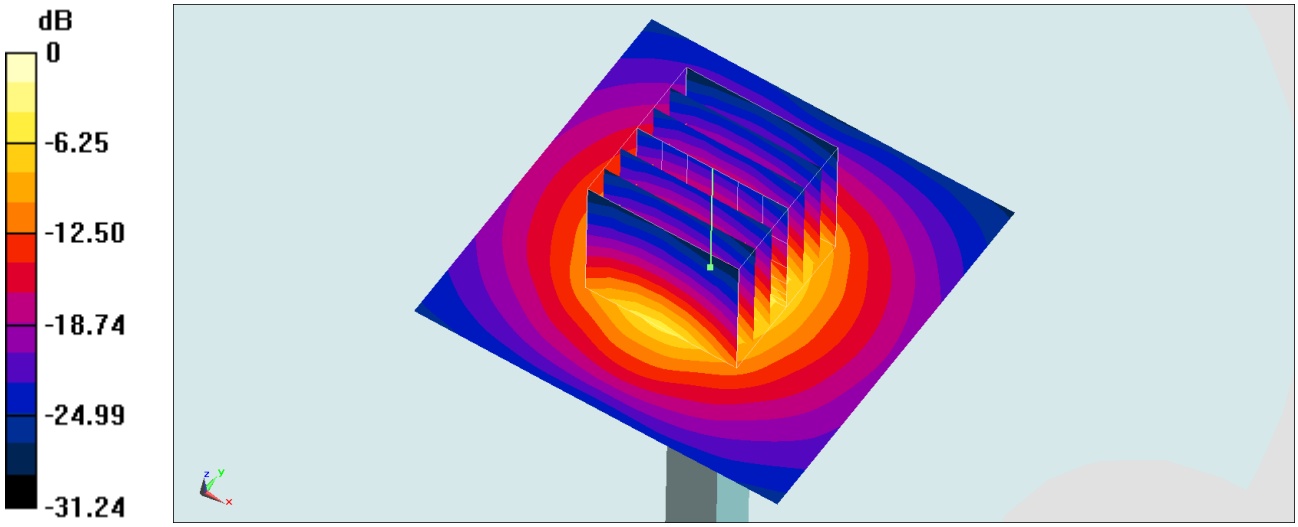

0 dB = 6.24 W/kg = 7.95 dBW/kg

System Check_Head_3700MHz

DUT: D3700V2-1006

Communication System: CW; Frequency: 3700 MHz;Duty Cycle: 1:1
Medium: HSL_3700_210225 Medium parameters used: f = 3700 MHz; σ = 3.185 S/m; ε_r = 37.911; ρ = 1000 kg/m^3
Ambient Temperature：23.6 ℃; Liquid Temperature：22.6 ℃

DASY5 Configuration:
- Probe: EX3DV4 - SN3931; ConvF(6.95, 6.95, 6.95) @ 3700 MHz; Calibrated: 2020/10/22
- Sensor-Surface: 1.4mm (Mechanical Surface Detection)
- Electronics: DAE4 Sn913; Calibrated: 2020/5/6
- Phantom: SAM_Left; Type: QD000P40CD; Serial: TP:1477
- Measurement SW: DASY52, Version 52.10 (4);SEMCAD X Version 14.6.14 (7483)

Pin=50mW/Area Scan (61x61x1): Interpolated grid: dx=1.200 mm, dy=1.200 mm
Maximum value of SAR (interpolated) = 6.93 W/kg

Pin=50mW/Zoom Scan (7x7x7)/Cube 0: Measurement grid: dx=5mm, dy=5mm, dz=1.4mm
Reference Value = 48.25 V/m; Power Drift = 0.02 dB
Peak SAR (extrapolated) = 9.85 W/kg
SAR(1 g) = 3.42 W/kg; SAR(10 g) = 1.26 W/kg
Maximum value of SAR (measured) = 6.97 W/kg

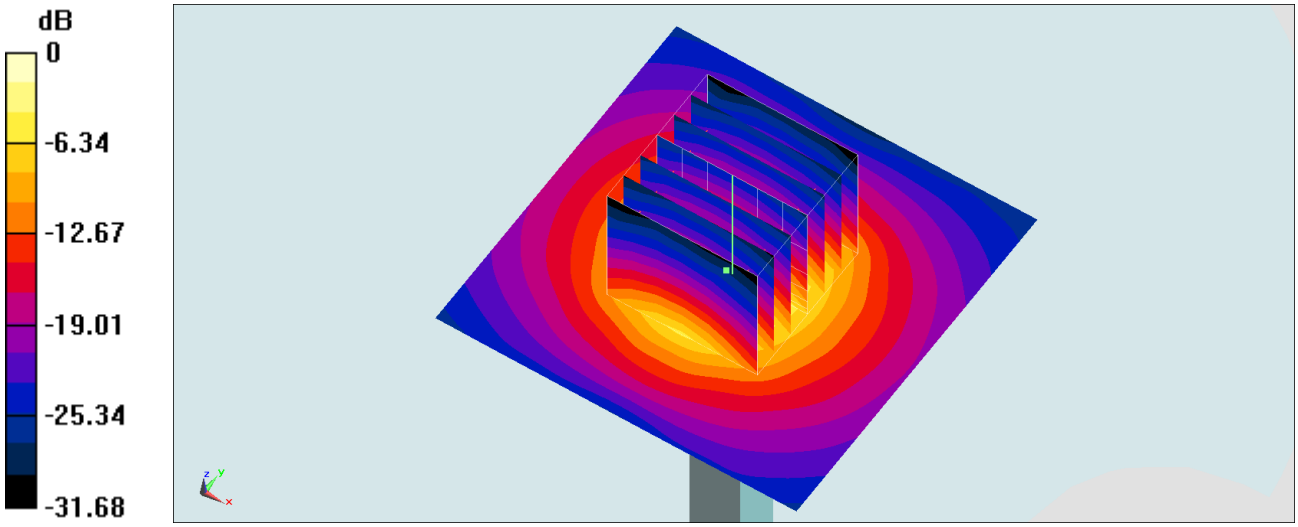

0 dB = 6.93 W/kg = 8.41 dBW/kg

Test Laboratory: Sporton International Inc. SAR/HAC Testing Lab Date: 2021/3/15

System Check_Head_3700MHz

DUT: D3700V2-1006

Communication System: CW; Frequency: 3700 MHz;Duty Cycle: 1:1
Medium: HSL_3700_210315 Medium parameters used: f = 3700 MHz; σ = 3.182 S/m; ε_r = 37.6; ρ = 1000 kg/m^3
Ambient Temperature：23.3 ℃; Liquid Temperature：22.3 ℃

DASY5 Configuration:
- Probe: EX3DV4 - SN3642; ConvF(6.45, 6.45, 6.45) @ 3700 MHz; Calibrated: 2020/4/29
- Sensor-Surface: 1.4mm (Mechanical Surface Detection)
- Electronics: DAE4 Sn376; Calibrated: 2020/11/23
- Phantom: SAM_Left; Type: SAM; Serial: TP:1479
- Measurement SW: DASY52, Version 52.10 (4);SEMCAD X Version 14.6.14 (7483)

Pin=100mW/Area Scan (71x71x1): Interpolated grid: dx=1.200 mm, dy=1.200 mm
Maximum value of SAR (interpolated) = 14.3 W/kg

Pin=100mW/Zoom Scan (7x7x7)/Cube 0: Measurement grid: dx=5mm, dy=5mm, dz=1.4mm
Reference Value = 69.89 V/m; Power Drift = -0.01 dB
Peak SAR (extrapolated) = 21.7 W/kg
SAR(1 g) = 7.05 W/kg; SAR(10 g) = 2.53 W/kg
Maximum value of SAR (measured) = 14.7 W/kg

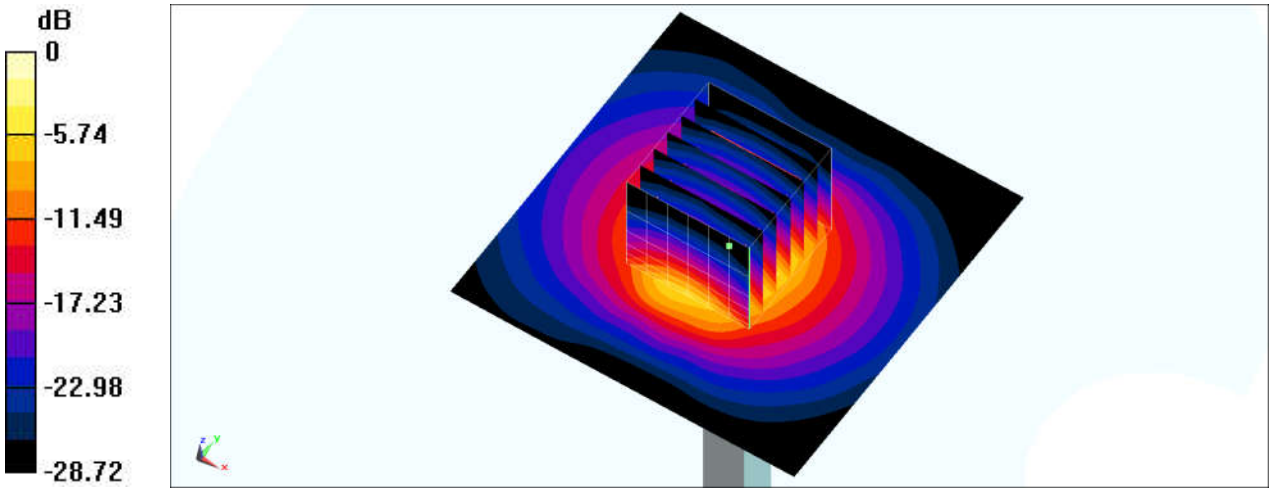

0 dB = 14.7 W/kg = 11.67 dBW/kg