RF Exposure Report

(Part 2: Test Under Dynamic Transmission Condition)

FCC ID : PKRISGM2000B

Equipment : Wireless Hotspot Modem

Model Name : M2000B

Applicant : Inseego Corporation

9710 Scranton Road Suite 200, San Diego, CA 92121

We, SPORTON INTERNATIONAL INC., would like to declare that the tested sample has been evaluated in accordance with the test procedures and has been in compliance with the applicable technical standards.

The test results in this report apply exclusively to the tested model / sample. Without written approval of SPORTON INTERNATIONAL INC. EMC & Wireless Communications Laboratory, the test report shall not be reproduced except in full.

Approved by: Cona Huang / Deputy Manager

Sporton International Inc.

No. 52, Huaya 1st Rd., Guishan Dist., Taoyuan City, Taiwan

History of this test report

Report No.	Version	Description	Issued Date
FA041658-03	01	Initial issue of report	Mar. 11, 2021

Contents

1 Introduction 5

2 Tx Varying Transmission Test Cases and Test Proposal 6

3 SAR Time Averaging Validation Test Procedures 9

3.1 Test sequence determination for validation 9
3.2 Test configuration selection criteria for validating Smart Transmit feature 9
3.2.1 Test configuration selection for time-varying Tx power transmission 9
3.2.2 Test configuration selection for change in call 10
3.2.3 Test configuration selection for change in technology/band 10
3.2.4 Test configuration selection for change in DSI 10
3.2.5 Test configuration selection for SAR exposure switching 10
3.3 Test procedures for conducted power measurements 11
3.3.1 Time-varying Tx power transmission scenario 11
3.3.2 Change in call scenario 13
3.3.3 Change in technology and band 14
3.3.4 Change in antenna 15
3.3.5 Change in DSI 15
3.3.6 Change in time window 15
3.3.7 SAR exposure switching 17
3.4 Test procedure for time-varying SAR measurements 18

4 PD Time Averaging Validation Test Procedures 20

4.1 Test sequence for validation in mmW NR transmission 20
4.2 Test configuration selection criteria for validating Smart Transmit feature 20
4.2.1 Test configuration selection for time-varying Tx power transmission 20
4.2.2 Test configuration selection for change in antenna configuration (beam) 20
4.2.3 Test configuration selection for SAR vs. PD exposure switch during transmission 20
4.3 Test procedures for mmW radiated power measurements 20
4.3.1 Time-varying Tx power scenario 21
4.3.2 Switch in SAR vs. PD exposure during transmission 22
4.3.3 Change in antenna configuration (beam) 24
4.4 Test procedure for time-varying PD measurements 26
4.5 Test Case Reduction for Multiple Filings 28

5 Test Configurations 29

5.1 WWAN (sub-6) transmission 29

6 Conducted Power Test Results for Sub-6 Smart Transmit Feature Validation 31

6.1 Measurement setup 31
6.2 P_{limit} and P_{max} measurement results 34
6.3 Time-varying Tx power measurement results 35
6.3.1 5G NR n41 36
6.3.2 5G NR n25 38

7 SAR Test Results for Sub-6 Smart Transmit Feature Validation 40

7.1 Measurement setup 40
7.2 SAR measurement results for time-varying Tx power transmission scenario 41
7.2.1 5G NR n41 SAR test results 42
7.2.2 5G NR n25 SAR test results 44

8 Conclusions 46

1 Introduction

The equipment under test (EUT) is a portable handset (FCC ID: PKRISGM2000B), it contains the Qualcomm SM8250 modem supporting 2G/3G/4G technologies and SDX55 modem supporting mmW 5G NR bands. Both of these modems are enabled with Qualcomm Smart Transmit feature to control and manage transmitting power in real time and to ensure at all times the time-averaged RF exposure is in compliance with the FCC requirement..

This purpose of the Part 2 report is to demonstrate the EUT complies with FCC RF exposure requirement under Tx varying transmission scenarios, thereby validity of Qualcomm Smart Transmit feature for FCC equipment authorization

The P_{limit} and *input.power.limit* used in this report is determined in Part 0 and Part 1 reports.

Refer to PART 0 SAR AND POWER DENSITY CHAR REPORT, for product description and terminology used in this report.

Test Lab Information

Test Firm Name	Sporton International Inc.
Test Firm Information	No. 52, Huaya 1st Rd., Guishan Dist., Taoyuan City, Taiwan TEL: +886-3-327-3456 FAX: +886-3-328-4978
Test Firm Registration Number for FCC	553509
Date of Start during the Test	01/18/2021
Date of End during the Test	01/20/2021
Test Engineers	Steven Chang, Aaron Chen
Report Producer	Carlie Tsai

2 Tx Varying Transmission Test Cases and Test Proposal

To validate time averaging feature and demonstrate the compliance in Tx varying transmission conditions, the following transmission scenarios are covered in Part 2 test:

During a time-varying Tx power transmission: To prove that the Smart Transmit feature accounts for Tx power variations in time accurately.

During a call disconnect and re-establish scenario: To prove that the Smart Transmit feature accounts for history of past Tx power transmissions accurately.

During technology/band handover: To prove that the Smart Transmit feature functions correctly during transitions in technology/band.

During DSI (Device State Index) change: To prove that the Smart Transmit feature functions correctly during transition from one device state (DSI) to another.

During antenna (or beam) switch: To prove that the Smart Transmit feature functions correctly during transitions in antenna (such as AsDiv scenario) or beams (different antenna array configurations).

SAR vs. PD exposure switching during sub-6+mmW transmission: To prove that the Smart Transmit feature functions correctly and ensures total RF exposure compliance during transitions in SAR dominant exposure, SAR+PD exposure, and PD dominant exposure scenarios.

SAR exposure switching between two active radios (radio1 and radio2): To prove that the Smart Transmit feature functions correctly and ensures total RF exposure compliance when exposure varies among SAR_radio1 only, SAR_radio1 + SAR_radio2, and SAR_radio2 only scenarios.

As described in Part 0 report, the RF exposure is proportional to the Tx power for a SAR- and PD-characterized wireless device. Thus, feature validation in Part 2 can be effectively performed through conducted (for f < 6GHz) and radiated (for f ≥ 6GHz) power measurement. Therefore, the compliance demonstration under dynamic transmission conditions and feature validation are done in conducted/radiated power measurement setup for transmission scenario 1 through 8.

To add confidence in the feature validation, the time-averaged SAR and PD measurements are also performed but only performed for transmission scenario 1 to avoid the complexity in SAR and PD measurement (such as, for scenario 3 requiring change in SAR probe calibration file to accommodate different bands and/or tissue simulating liquid).

The strategy for testing in Tx varying transmission condition is outlined as follows:

- Demonstrate the total RF exposure averaged over FCC defined time windows does not exceed FCC's SAR and PD limits, through <u>time-averaged power</u> measurements
  - Measure conducted Tx power (for *f* < 6GHz) versus time, and radiated Tx power (EIRP for *f* > 10GHz) versus time.
  - Convert it into RF exposure and divide by respective FCC limits to get normalized exposure versus time.
  - Perform running time-averaging over FCC defined time windows.

- Demonstrate that the total normalized time-averaged RF exposure is less than 1 for all transmission scenarios at all times.

  Mathematical expression:

  - For sub-6 transmission only:

$$1g_or_10gSAR(t) = \frac{conducted_Tx_power(t)}{conducted_Tx_power_P_{limit}} * 1g_or_10gSAR_P_{limit}$$

(1a)

$$\frac{\frac{1}{T_{SAR}}\int_{t-T_{SAR}}^{t} 1g_or_10gSAR(t)dt}{FCC\ SAR\ limit} \leq 1 \quad (1b)$$

  - For sub-6+mmW transmission:

$$1g_or_10gSAR(t) = \frac{conducted_Tx_power(t)}{conducted_Tx_power_P_{limit}} * 1g_or_10gSAR_P_{limit}$$

(2a)

$$4cm^2PD(t) = \frac{radiated_Tx_power(t)}{radiated_Tx_power_input.power.limit} * 4cm^2PD_input.power.limit$$

(2b)

$$\frac{\frac{1}{T_{SAR}}\int_{t-T_{SAR}}^{t} 1g_or_10gSAR(t)dt}{FCC\ SAR\ limit} + \frac{\frac{1}{T_{PD}}\int_{t-T_{PD}}^{t} 4cm^2PD(t)dt}{FCC\ 4cm^2\ PD\ limit} \leq 1 \quad (2c)$$

  where, $conducted_Tx_power(t)$, $conducted_Tx_power_P_{limit}$, and $1g_or_10gSAR_P_{limit}$ correspond to the measured instantaneous conducted Tx power, measured conducted Tx power at P_{limit}, and measured *1gSAR or 10gSAR* values at P_{limit} corresponding to sub-6 transmission. Similarly, $radiated_Tx_power(t)$, $radiated_Tx_power_input.power.limit$, and $4cm^2PD_input.power.limit$ correspond to the measured instantaneous radiated Tx power, radiated Tx power at *input.power.limit* (i.e., radiated power limit), and $4cm^2$PD value at *input.power.limit* corresponding to mmW transmission. Both P_{limit} and *input.power.limit* are the parameters pre-defined in Part 0 and loaded via Embedded File System (EFS) onto the EUT. T_{SAR} is the FCC defined time window for sub-6 radio; T_{PD} is the FCC defined time window for mmW radio.

- Demonstrate the total RF exposure averaged over FCC defined time windows does not exceed FCC's SAR and PD limits, through time-averaged SAR and PD measurements. Note as mentioned earlier, this measurement is performed for transmission scenario 1 only.

  - For sub-6 transmission only, measure instantaneous SAR versus time; for LTE+sub6 NR transmission, request low power (or all-down bits) on LTE so that measured SAR predominantly corresponds to sub6 NR.

- For LTE + mmW transmission, measure instantaneous E-field versus time for mmW radio and instantaneous conducted power versus time for LTE radio.
- Convert it into RF exposure and divide by respective FCC limits to obtain normalized exposure versus time.
- Perform time averaging over FCC defined time window.
- Demonstrate that the total normalized time-averaged RF exposure is less than 1 for transmission scenario 1 at all times.

Mathematical expression:

- For sub-6 transmission only:

$$1g_or_10gSAR(t) = \frac{pointSAR(t)}{pointSAR_P_{limit}} * 1g_or_10gSAR(t)_P_{limit} \quad (3a)$$

$$\frac{\frac{1}{T_{SAR}}\int_{t-T_{SAR}}^{t} 1g_or_10gSAR(t)dt}{FCC\ SAR\ limit} \leq 1 \quad (3b)$$

- For LTE+mmW transmission:

$$1g_or_10gSAR(t) = \frac{conducted_Tx_power(t)}{conducted_Tx_power_P_{limit}} * 1g_or_10gSAR_P_{limit} \quad (4a)$$

$$4cm^2PD(t) = \frac{[pointE(t)]^2}{[pointE_input.power.limit]^2} * 4cm^2PD_input.power.limit \quad (4b)$$

$$\frac{\frac{1}{T_{SAR}}\int_{t-T_{SAR}}^{t} 1g_or_10gSAR(t)dt}{FCC\ SAR\ limit} + \frac{\frac{1}{T_{PD}}\int_{t-T_{PD}}^{t} 4cm^2PD(t)dt}{FCC\ 4cm^2PD\ limit} \leq 1 \quad (4c)$$

where, $pointSAR(t)$, $pointSAR_P_{limit}$, and $1g_or_10gSAR_P_{limit}$ correspond to the measured instantaneous point SAR, measured point SAR at P_{limit}, and measured *1gSAR* or 10gSAR values at P_{limit} corresponding to sub-6 transmission. Similarly, $pointE(t)$, $pointE_input.power.limit$, and $4cm^2PD_input.power.limit$ correspond to the measured instantaneous E-field, E-field at *input.power.limit*, and $4cm^2$PD value at *input.power.limit* corresponding to mmW transmission.

NOTE: cDASY6 measurement system by Schmid & Partner Engineering AG (SPEAG) of Zurich, Switzerland measures relative E-field, and provides ratio of $\frac{[pointE(t)]^2}{[pointE_input.power.limit]^2}$ versus time.

3 SAR Time Averaging Validation Test Procedures

This chapter provides the test plan and test procedure for validating Qualcomm Smart Transmit feature for sub-6 transmission. The 100 seconds time window for operating *f* < 3GHz is used as an example to detail the test procedures in this chapter.

3.1 Test sequence determination for validation

Following the FCC recommendation, two test sequences having time-variation in Tx power are predefined for sub-6 (*f* < 6 GHz) validation:

- Test sequence 1: request EUT's Tx power to be at maximum power, measured P_{max}†, for 80s, then requesting for half of the maximum power, i.e., measured $P_{max}/2$, for the rest of the time.
- Test sequence 2: request EUT's Tx power to vary with time. This sequence is generated relative to measured P_{max}, measured P_{limit} and calculated $P_{reserve}$ (= measured P_{limit} in dBm - *Reserve_power_margin* in dB) of EUT based on measured P_{limit}.

The details for generating these two test sequences is described and listed in Appendix A.

NOTE: For test sequence generation, "measured P_{limit}" and "measured P_{max}" are used instead of the "P_{limit}" specified in EFS entry and "P_{max}" specified for the device, because Smart Transmit feature operates against the actual power level of the "P_{limit}" that was calibrated for the EUT. The "measured P_{limit}" accurately reflects what the feature is referencing to, therefore, it should be used during feature validation testing. The RF tune up and device-to-device variation are already considered in Part 0 report prior to determining P_{limit}.

3.2 Test configuration selection criteria for validating Smart Transmit feature

For validating Smart Transmit feature, this section provides a general guidance to select test cases. In practice, an adjustment can be made in test case selection. The justification/clarification may be provided.

3.2.1 Test configuration selection for time-varying Tx power transmission

The Smart Transmit time averaging feature operation is independent of bands, modes, and channels for a given technology. Hence, validation of Smart Transmit in one band/mode/channel per technology is sufficient.

The criteria for the selection are based on the P_{limit} values determined in Part 0 report. Select the band in each supported technology that corresponds to the P_{limit} value that is less than P_{max} for validating Smart Transmit.

*

3.2.2 Test configuration selection for change in call

The criteria to select a test configuration for call-drop measurement is:

- Select technology/band with least P_{limit} among all supported technologies/bands, and select the radio configuration (e.g., # of RBs, channel#) in this technology/band that corresponds to the highest *measured* 1gSAR at P_{limit} listed in Part 1 report.
- In case of multiple bands having same least P_{limit}, then select the band having the highest *measured* 1gSAR at P_{limit} in Part 1 report.

This test is performed with the EUT's Tx power requested to be at maximum power, the above band selection will result in Tx power enforcement (i.e., EUT forced to have Tx power at $P_{reserve}$) for longest duration in one FCC defined time window. The call change (call drop/reestablish) is performed during the Tx power enforcement duration (i.e., during the time when EUT is forced to have Tx power at $P_{reserve}$). One test is sufficient as the feature operation is independent of technology and band.

3.2.3 Test configuration selection for change in technology/band

The selection criteria for this measurement is, for a given antenna, to have EUT switch from a technology/band with lowest P_{limit} within the technology group (in case of multiple bands having the same P_{limit}, then select the band with highest *measured* 1gSAR at P_{limit}) to a technology/band with highest P_{limit} within the technology group, in case of multiple bands having the same P_{limit}, then select the band with lowest *measured* 1gSAR at P_{limit} in Part 1 report, or vice versa.

This test is performed with the EUT's Tx power requested to be at maximum power, the technology/band switch is performed during Tx power enforcement duration (i.e., during the time when EUT is forced to have Tx power at $P_{reserve}$).

3.2.4 Test configuration selection for change in DSI

The criteria to select a test configuration for DSI change test is

- Select a technology/band having the $P_{limit} < P_{max}$ within any technology and DSI group, and for the same technology/band having a different P_{limit} in any other DSI group. Note that the selected DSI transition need to be supported by the device.

This test is performed with the EUT's Tx power requested to be at maximum power in selected technology/band, and DSI change is conducted during Tx power enforcement duration (i.e., during the time when EUT is forced to have Tx power at $P_{reserve}$).

3.2.5 Test configuration selection for SAR exposure switching

If supported, the test configuration for SAR exposure switching should cover

1. SAR exposure switch when two active radios are in the same time window
2. SAR exposure switch when two active radios are in different time windows. One test with two active radios in any two different time windows is sufficient as Smart Transmit operation is the same for RF exposure switch in any combination of two different time windows. For device supporting LTE + mmW NR, this test is covered in Section 8.2.3 and 8.2.4.

The Smart Transmit time averaging operation is independent of the source of SAR exposure (for example, LTE vs. Sub6 NR) and ensures total time-averaged RF exposure compliance. Hence, validation of Smart Transmit in any one simultaneous SAR transmission scenario (i.e., one combination for LTE + Sub6 NR transmission) is sufficient, where the SAR exposure varies among SAR_{radio1} only, SAR_{radio1} + SAR_{radio2}, and SAR_{radio2} only scenarios.

The criteria to select a test configuration for validating Smart Transmit feature during SAR exposure switching scenarios is

- Select any two < 6GHz technologies/bands that the EUT supports simultaneous transmission (for example, LTE+Sub6 NR).
- Among all supported simultaneous transmission configurations, the selection order is
  1. select one configuration where both P_{limit} of radio1 and radio2 is less than their corresponding P_{max}, preferably, with different P_{limits}. If this configuration is not available, then,
  2. select one configuration that has P_{limit} less than its P_{max} for at least one radio. If this can not be found, then,
  3. select one configuration that has P_{limit} of radio1 and radio2 greater than P_{max} but with least ($P_{limit} – P_{max}$) delta.

Test for one simultaneous transmission scenario is sufficient as the feature operation is the same.

3.3 Test procedures for conducted power measurements

This section provides general conducted power measurement procedures to perform compliance test under dynamic transmission scenarios described in Section 2. In practice, an adjustment can be made in these procedures. The justification/clarification may be provided.

3.3.1 Time-varying Tx power transmission scenario

This test is performed with the two pre-defined test sequences described in Section 3.1 for all the technologies and bands selected in Section 3.2.1. The purpose of the test is to demonstrate the effectiveness of power limiting enforcement and that the time-averaged SAR (corresponding time-averaged Tx power) does not exceed the FCC limit at all times (see Eq. (1a) and (1b)).

Test procedure

1. Measure P_{max}, measure P_{limit} and calculate $P_{reserve}$ (= measured P_{limit} in dBm – *Reserve_power_margin* in dB) and follow Section 3.1 to generate the test sequences for all the technologies and bands selected in Section 3.2.1. Both test sequence 1 and test sequence 2 are created based on measured P_{max} and measured P_{limit} of the EUT. Test condition to measure P_{max} and P_{limit} is:
   - □ Measure P_{max} with Smart Transmit <u>disabled</u> and callbox set to request maximum power.

- Measure P_{limit} with Smart Transmit enabled and *Reserve_power_margin* set to 0 dB, callbox set to request maximum power.

Set *Reserve_power_margin* to actual (intended) value (3dB for this EUT based on Part 1 report) and reset power on EUT to enable Smart Transmit, establish radio link in desired radio configuration, with callbox requesting the EUT's Tx power to be at pre-defined test sequence 1, measure and record Tx power versus time, and then convert the conducted Tx power into 1gSAR or 10gSAR value (see Eq. (1a)) using measured P_{limit} from above Step 1. Perform running time average to determine time-averaged power and 1gSAR or 10gSAR versus time as illustrated in Figure 3-1 where using 100-seconds time window as an example.

NOTE: In Eq.(1a), instantaneous Tx power is converted into instantaneous 1gSAR or 10gSAR value by applying the measured worst-case 1gSAR or 10gSAR value at P_{limit} for the corresponding technology/band/antenna/DSI reported in Part 1 report.

NOTE: For an easier computation of the running time average, 0 dBm can be added at the beginning of the test sequences the length of the responding time window, for example, add 0dBm for 100-seconds so the running time average can be directly performed starting with the first 100-seconds data using excel spreadsheet. This technique applies to all tests performed in this Part 2 report for easier time-averaged computation using excel spreadsheet.

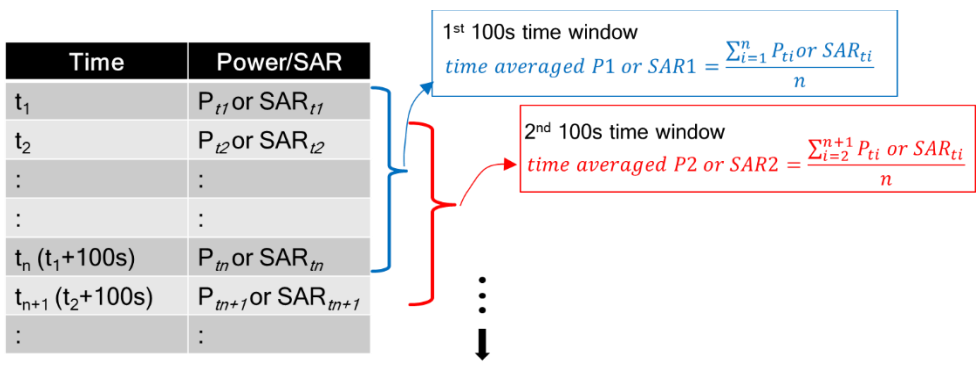

Figure 3-1 100s running average illustration

Make one plot containing:

Instantaneous Tx power versus time measured in Step 2,

Requested Tx power used in Step 2 (test sequence 1),

Computed time-averaged power versus time determined in Step 2,

Time-averaged power limit (corresponding to FCC SAR limit of 1.6 W/kg for 1gSAR or 4.0W/kg for 10gSAR) given by

$$Time\ avearged\ power\ limit = meas.P_{limit} + 10 \times \log(\frac{FCC\ SAR\ limit}{meas.SAR_Plimit}) \qquad (5a)$$

where $meas.P_{limit}$ and $meas.SAR_Plimit$ correspond to measured power at P_{limit} and measured SAR at P_{limit}.

Make another plot containing:

Computed time-averaged 1gSAR or 10gSAR versus time determined in Step 2

FCC $1gSAR_{limit}$ of 1.6W/kg or FCC $10gSAR_{limit}$ of 4.0W/kg.

Repeat Steps 2 ~ 4 for pre-defined test sequence 2 and replace the requested Tx power (test sequence 1) in Step 2 with test sequence 2.

Repeat Steps 2 ~ 5 for all the selected technologies and bands.

The validation criteria are, at all times, the time-averaged power versus time shown in Step 3 plot shall not exceed the time-averaged power limit (defined in Eq. (5a)), in turn, the time-averaged 1gSAR or 10gSAR versus time shown in Step 4 plot shall not exceed the FCC limit of 1.6 W/kg for 1gSAR or 4.0 W/kg for 10gSAR (i.e., Eq. (1b)).

3.3.2 Change in call scenario

This test is to demonstrate that Smart Transmit feature accurately accounts for the past Tx powers during time-averaging when a new call is established.

The call disconnect and re-establishment needs to be performed during power limit enforcement, i.e., when the EUT's Tx power is at $P_{reserve}$ level, to demonstrate the continuity of RF exposure management and limiting in call change scenario. In other words, the RF exposure averaged over any FCC defined time window (including the time windows containing the call change) doesn't exceed FCC limit of 1.6 W/kg for 1gSAR or 4.0 W/kg for 10gSAR.

Test procedure

1. Measure P_{limit} for the technology/band selected in Section 3.2.2. Measure P_{limit} with Smart Transmit enabled and *Reserve_power_margin* set to 0 dB, callbox set to request maximum power.

Set *Reserve_power_margin* to actual (intended) value and reset power on EUT to enable Smart Transmit.

Establish radio link with callbox in the selected technology/band.

Request EUT's Tx power at 0 dBm for at least one time window specified for the selected technology/band, followed by requesting EUT's Tx power to be at maximum power for about ~60 seconds, and then drop the call for ~10 seconds. Afterwards, re-establish another call in the same radio configuration (i.e., same technology/band/channel) and continue callbox requesting EUT's Tx power to be at maximum power for the remaining time of at least another full duration of the specified time window. Measure and record Tx power versus time. Once the measurement is done, extract instantaneous Tx power versus time, convert the measured conducted Tx power into 1gSAR or 10gSAR value using Eq. (1a), and then perform the running time average to determine time-averaged power and 1gSAR or 10gSAR versus time.

NOTE: In Eq.(1a), instantaneous Tx power is converted into instantaneous 1gSAR or 10gSAR value by applying the measured worst-case 1gSAR or 10gSAR value at P_{limit} for the corresponding technology/band/antenna/DSI reported in Part 1 report.

Make one plot containing: (a) instantaneous Tx power versus time, (b) requested power, (c) computed time-averaged power, (d) time-averaged power limit calculated using Eq.(5a).

Make another plot containing: (a) computed time-averaged 1gSAR or 10gSAR versus time, and (b) FCC limit of 1.6 W/kg for 1gSAR or 4.0 W/kg for 10gSAR.

The validation criteria are, at all times, the time-averaged power versus time shall not exceed the time-averaged power limit (defined in Eq.(5a)), in turn, the time-averaged 1gSAR or 10gSAR versus time shall not exceed the FCC limit of 1.6 W/kg for 1gSAR or 4.0 W/kg for 10gSAR (i.e., Eq. (1b)).

3.3.3 Change in technology and band

This test is to demonstrate the correct power control by Smart Transmit during technology switches and/or band handovers.

Similar to the change in call test in Section 3.3.2, to validate the continuity of RF exposure limiting during the transition, the technology and band handover needs to be performed when EUT's Tx power is at $P_{reserve}$ level (i.e., during Tx power enforcement) to make sure that the EUT's Tx power from previous $P_{reserve}$ level to the new $P_{reserve}$ level (corresponding to new technology/band). Since the P_{limit} could vary with technology and band, Eq. (1a) can be written as follows to convert the instantaneous Tx power in 1gSAR or 10gSAR exposure for the two given radios, respectively:

$$1g_or_10gSAR_1(t) = \frac{conducted_Tx_power_1(t)}{conducted_Tx_power_P_{limit_1}} * 1g_or_10gSAR_P_{limit_1} \quad (6a)$$

$$1g_or_10gSAR_2(t) = \frac{conducted_Tx_power_2(t)}{conducted_Tx_power_P_{limit_2}} * 1g_or_10gSAR_P_{limit_2} \quad (6b)$$

$$\frac{1}{T_{SAR}}\left[\int_{t-T_{SAR}}^{t_1} \frac{1g_or_10gSAR_1(t)}{FCC\ SAR\ limit} dt + \int_{t-T_{SAR}}^{t} \frac{1g_or_10gSAR_2(t)}{FCC\ SAR\ limit} dt\right] \leq 1 \quad (6c)$$

where, *conducted_Tx_power_1(t)*, *conducted_Tx_power_*P_{limit_1}, and *1g_or_10gSAR_*P_{limit_1} correspond to the measured instantaneous conducted Tx power, measured conducted Tx power at P_{limit}, and measured *1gSAR* or *10gSAR* value at P_{limit} of technology1/band1; *conducted_Tx_power_2(t)*, *conducted_Tx_power_*$P_{limit_2}(t)$, and *1g_or_10gSAR_*P_{limit_2} correspond to the measured instantaneous conducted Tx power, measured conducted Tx power at P_{limit}, and measured *1gSAR* or *10gSAR* value at P_{limit} of technology2/band2. Transition from technology1/band1 to the technology2/band2 happens at time-instant 't_1'.

Test procedure

1. Measure P_{limit} for both the technologies and bands selected in Section 3.2.3. Measure P_{limit} with Smart Transmit <u>enabled</u> and *Reserve_power_margin* set to 0 dB, callbox set to request maximum power.

Set *Reserve_power_margin* to actual (intended) value and reset power on EUT to enable Smart Transmit

Establish radio link with callbox in first technology/band selected.

Request EUT's Tx power at 0 dBm for at least one time window specified for the selected technology/band, followed by requesting EUT's Tx power to be at maximum power for about ~60 seconds, and then switch to second technology/band selected. Continue with callbox requesting EUT's Tx power to be at maximum power for the remaining time of at least another full duration of the specified time window. Measure and record Tx power versus time for the full duration of the test.

Once the measurement is done, extract instantaneous Tx power versus time, and convert the conducted Tx power into 1gSAR or 10gSAR value using Eq. (6a) and (6b) and corresponding measured P_{limit} values from Step 1 of this section. Perform the running time average to determine time-averaged power and 1gSAR or 10gSAR versus time.

NOTE: In Eq.(6a) & (6b), instantaneous Tx power is converted into instantaneous 1gSAR or 10gSAR value by applying the measured worst-case 1gSAR or 10gSAR value at P_{limit} for the corresponding technology/band/antenna/DSI reported in Part 1 report.

Make one plot containing: (a) instantaneous Tx power versus time, (b) requested power, (c) computed time-averaged power, (d) time-averaged power limit calculated using Eq.(5a).

Make another plot containing: (a) computed time-averaged 1gSAR or 10gSAR versus time, and (b) FCC limit of 1.6 W/kg for 1gSAR or 4.0 W/kg for 10gSAR.

The validation criteria are, at all times, the time-averaged 1gSAR or 10gSAR versus time shall not exceed the FCC limit of 1.6 W/kg for 1gSAR or 4.0 W/kg for 10gSAR (i.e., Eq. (6c)).

3.3.4 Change in antenna

This test is to demonstrate the correct power control by Smart Transmit during antenna switches from one antenna to another. The test procedure is identical to Section 3.3.3, by replacing technology/band switch operation with antenna switch. The validation criteria are, at all times, the time-averaged 1gSAR or 10gSAR versus time shall not exceed FCC limit of 1.6 W/kg for 1gSAR or 4.0 W/kg for 10gSAR.

NOTE: If the EUT does not support antenna switch within the same technology/band, but has multiple antennas to support different frequency bands, then the antenna switch test is included as part of change in technology and band (Section 3.3.3) test.

3.3.5 Change in DSI

This test is to demonstrate the correct power control by Smart Transmit during DSI switches from one DSI to another. The test procedure is identical to Section 3.3.3, by replacing technology/band switch operation with DSI switch. The validation criteria are, at all times, the time-averaged 1gSAR or 10gSAR versus time shall not exceed FCC limit of 1.6 W/kg for 1gSAR or 4.0 W/kg for 10gSAR.

.

3.3.6 Change in time window

This test is to demonstrate the correct power control by Smart Transmit during the change in averaging time window when a specific band handover occurs. FCC specifies time-averaging windows of 100s for Tx frequency < 3GHz, and 60s for Tx frequency between 3GHz and 6GHz.

To validate the continuity of RF exposure limiting during the transition, the band handover test needs to be performed when EUT handovers from operation band less than 3GHz to greater than 3GHz and vice versa. The equations (3a) and (3b) in Section 2 can be written as follows for transmission scenario having change in time window,

$$1gSAR_1(t) = \frac{conducted_Tx_power_1(t)}{conducted_Tx_power_P_{limit_1}} * 1g_or\ 10g_SAR_P_{limit_1} \qquad (7a)$$

$$1gSAR_2(t) = \frac{conducted_Tx_power_2(t)}{conducted_Tx_power_P_{limit_2}} * 1g_or\ 10g_SAR_P_{limit_2} \qquad (7b)$$

$$\frac{1}{T1_{SAR}}\left[\int_{t-T1_{SAR}}^{t_1} \frac{1g_or\ 10g_SAR_1(t)}{FCC\ SAR\ limit} dt\right] + \frac{1}{T2_{SAR}}\left[\int_{t-T2_{SAR}}^{t} \frac{1g_{or}10g_SAR_2(t)}{FCC\ SAR\ limit} dt\right] \leq 1 \qquad (7c)$$

where, *conducted_Tx_power_1(t)*, *conducted_Tx_power_*P_{limit_1}*(t)*, and *1g_ or 10g_SAR_*P_{limit_1} correspond to the instantaneous Tx power, conducted Tx power at P_{limit}, and compliance *1g_ or 10g_SAR* values at P_{limit_1} of band1 with time-averaging window '$T1_{SAR}$'; *conducted_Tx_power_2(t)*, *conducted_Tx_power_*P_{limit_2}*(t)*, and *1g_ or 10g_SAR_*P_{limit_2} correspond to the instantaneous Tx power, conducted Tx power at P_{limit}, and compliance *1g_ or 10g_SAR* values at P_{limit_2} of band2 with time-averaging window '$T2_{SAR}$'. One of the two bands is less than 3GHz, another is greater than 3GHz. Transition from first band with time-averaging window '$T1_{SAR}$' to the second band with time-averaging window '$T2_{SAR}$' happens at time-instant 't_1'.

Test procedure

2. Measure P_{limit} for both the technologies and bands selected in Section 3.2.6. Measure P_{limit} with Smart Transmit enabled and *Reserve_power_margin* set to 0 dB, callbox set to request maximum power.
3. Set *Reserve_power_margin* to actual (intended) value and enable Smart Transmit

Transition from 100s time window to 60s time window, and vice versa

4. Establish radio link with callbox in the technology/band having 100s time window selected in Section 3.2.6.
5. Request EUT's Tx power to be at 0 dBm for at least 100 seconds, followed by requesting EUT's Tx power to be at maximum power for about ~140 seconds, and then switch to second technology/band (having 60s time window) selected in Section 3.2.6. Continue with callbox requesting EUT's Tx power to be at maximum power for about ~60s in this second technology/band, and then switch back to the first technology/band. Continue with callbox requesting EUT's Tx power to be at maximum power for at least another 100s. Measure and record Tx power versus time for the entire duration of the test.
6. Once the measurement is done, extract instantaneous Tx power versus time, and convert the conducted Tx power into 1gSAR or 10gSAR value (see Eq. (7a) and (7b)) using corresponding technology/band Step 1 result, and then perform 100s running average to determine time-averaged 1gSAR or 10gSAR versus time. Note that in Eq.(7a) & (7b), instantaneous Tx power is converted into instantaneous 1gSAR or 10gSAR value by applying the worst-case 1gSAR or 10gSAR value tested in Part 1 for the selected technologies/bands at P_{limit}.
7. Make one plot containing: (a) instantaneous Tx power versus time measured in Step 4.

8. Make another plot containing: (a) instantaneous 1gSAR versus time determined in Step 5, (b) computed time-averaged 1gSAR versus time determined in Step 5, and (c) corresponding regulatory $1gSAR_{limit}$ of 1.6W/kg or $10gSAR_{limit}$ of 4.0W/kg.

Transition from 60s time window to 100s time window, and vice versa

9. Establish radio link with callbox in the technology/band having 60s time window selected in Section 3.2.6.
10. Request EUT's Tx power to be at 0 dBm for at least 60 seconds, followed by requesting EUT's Tx power to be at maximum power for about ~80 seconds, and then switch to second technology/band (having 100s time window) selected in Section 3.2.6. Continue with callbox requesting EUT's Tx power to be at maximum power for about ~100s in this second technology/band, and then switch back to the first technology/band. Continue with callbox requesting EUT's Tx power to be at maximum power for the remaining time for a total test time of 500 seconds. Measure and record Tx power versus time for the entire duration of the test.
11. Repeat above Step 5~7 to generate the plots

The validation criteria is, at all times, the time-averaged 1gSAR or 10gSAR versus time shall not exceed the regulatory $1gSAR_{limit}$ of 1.6W/kg or $10gSAR_{limit}$ of 4.0W/kg

3.3.7 SAR exposure switching

This test is to demonstrate that Smart Transmit feature is accurately accounts for switching in exposures among SAR from radio1 only, SAR from both radio1 and radio2, and SAR from radio2 only scenarios, and ensures total time-averaged RF exposure complies with the FCC limit. Here, radio1 represents primary radio (for example, LTE anchor in a NR non-standalone mode call) and radio2 represents secondary radio (for example, sub6 NR or mmW NR). The detailed test procedure for SAR exposure switching in the case of LTE+Sub6 NR non-standalone mode transmission scenario is provided in Appendix B.2.

Test procedure:

1. Measure conducted Tx power corresponding to P_{limit} for radio1 and radio2 in selected band. Test condition to measure conducted P_{limit} is:
   - □ Establish device in call with the callbox for radio1 technology/band. Measure conducted Tx power corresponding to radio1 P_{limit} with Smart Transmit <u>enabled</u> and *Reserve_power_margin* set to 0 dB, callbox set to request maximum power.
   - □ Repeat above step to measure conducted Tx power corresponding to radio2 $\underline{P_{limit}}$. If radio2 is dependent on radio1 (for example, non-standalone mode of Sub6 NR requiring radio1 LTE as anchor), then establish radio1 + radio2 call with callbox, and request all down bits for radio1 LTE. In this scenario, with callbox requesting maximum power from radio2 Sub6 NR, measured conducted Tx power corresponds to radio2 $\underline{P_{limit}}$ (as radio1 LTE is at all-down bits)
2. Set *Reserve_power_margin* to actual (intended) value, with EUT setup for radio1 + radio2 call. In this description, it is assumed that radio2 has lower priority than radio1. Establish device in radio1+radio2 call, and request all-down bits or low power on

radio1, with callbox requesting EUT's Tx power to be at maximum power in radio2 for at least one time window. After one time window, set callbox to request EUT's Tx power to be at maximum power on radio1, i.e., all-up bits. Continue radio1+radio2 call with both radios at maximum power for at least one time window, and drop (or request all-down bits on) radio2. Continue radio1 at maximum power for at least one time window. Record the conducted Tx power for both radio1 and radio2 for the entire duration of this test.

3. Once the measurement is done, extract instantaneous Tx power versus time for both radio1 and radio2 links. Convert the conducted Tx power for both these radios into 1gSAR or 10gSAR value (see Eq. (6a) and (6b)) using corresponding technology/band P_{limit} measured in Step 1, and then perform the running time average to determine time-averaged 1gSAR or 10gSAR versus time.
4. Make one plot containing: (a) instantaneous Tx power versus time measured in Step 2.
5. Make another plot containing: (a) instantaneous 1gSAR versus time determined in Step 3, (b) computed time-averaged 1gSAR versus time determined in Step 3, and (c) corresponding regulatory $1gSAR_{limit}$ of 1.6W/kg or $10gSAR_{limit}$ of 4.0W/kg.

The validation criteria is, at all times, the time-averaged 1gSAR or 10gSAR versus time shall not exceed the regulatory $1gSAR_{limit}$ of 1.6W/kg or $10gSAR_{limit}$ of 4.0W/kg.

3.4 Test procedure for time-varying SAR measurements

This section provides general time-varying SAR measurement procedures to perform compliance test under dynamic transmission scenarios described in Section 2. In practice, an adjustment can be made in these procedures. The justification/clarification may be provided.

To perform the validation through SAR measurement for transmission scenario 1 described in Section 2, the "path loss" between callbox antenna and EUT needs to be calibrated to ensure that the EUT Tx power reacts to the requested power from callbox in a radiated call. It should be noted that when signaling in closed loop mode, protocol-level power control is in play, resulting in EUT not solely following callbox TPC (Tx power control) commands. In other words, EUT response has many dependencies (RSSI, quality of signal, path loss variation, fading, etc.,) other than just TPC commands. These dependencies have less impact in conducted setup (as it is a controlled environment and the path loss can be very well calibrated) but have significant impact on radiated testing in an uncontrolled environment, such as SAR test setup. Therefore, the deviation in EUT Tx power from callbox requested power is expected, however the time-averaged SAR should not exceed FCC SAR requirement at all times as Smart Transmit controls Tx power at EUT.

The following steps are for time averaging feature validation through SAR measurement:

1. "Path Loss" calibration: Place the EUT against the phantom in the worst-case position determined based on Section 3.2.1. For each band selected, prior to SAR measurement, perform "path loss" calibration between callbox antenna and EUT. Since the SAR test environment is not controlled and well calibrated for OTA (Over the Air) test, extreme care needs to be taken to avoid the influence from reflections. The test setup is described in Section 7.1.

Time averaging feature validation:

For a given radio configuration (technology/band) selected in Section 3.2.1, enable Smart Transmit and set *Reserve_power_margin* to 0 dB, with callbox to request maximum power, perform area scan, conduct pointSAR measurement at peak location of the area scan. This point SAR value, $pointSAR_P_{limit}$, corresponds to point SAR at the measured P_{limit} (i.e., measured P_{limit} from the EUT in Step 1 of Section 3.3.1).

Set *Reserve_power_margin* to actual (intended) value and reset power on EUT to enable Smart Transmit. Note, if *Reserve_power_margin* cannot be set wirelessly, care must be taken to re-position the EUT in the exact same position relative to the SAM phantom as in above Step 2.i. Establish radio link in desired radio configuration, with callbox requesting the EUT's Tx power at power levels described by test sequence 1 generated in Step 1 of Section 3.3.1, conduct point SAR measurement versus time at peak location of the area scan determined in Step 2.i of this section. Once the measurement is done, extract instantaneous point SAR vs time data, *pointSAR(t)*, and convert it into instantaneous 1gSAR or 10gSAR vs. time using Eq. (3a), re-written below:

$$1g_or_10gSAR(t) = \frac{pointSAR(t)}{pointSAR_P_{limit}} * 1g_or_10gSAR_P_{limit}$$

where, $pointSAR_P_{limit}$ is the value determined in Step 2.i, and *pointSAR(t)* is the instantaneous point SAR measured in Step 2.ii, $1g_or_10gSAR_P_{limit}$ is the measured 1gSAR or 10gSAR value listed in Part 1 report.

Perform 100s running average to determine time-averaged 1gSAR or 10gSAR versus time.

Make one plot containing: (a) time-averaged 1gSAR or 10gSAR versus time determined in Step 2.iii of this section, (b) FCC limit of 1.6 W/kg for 1gSAR or 4.0 W/kg for 10gSAR.

Repeat 2.ii ~ 2.iv for test sequence 2 generated in Step 1 of Section 3.3.1.

Repeat 2.i ~ 2.v for all the technologies and bands selected in Section 3.2.1.

The time-averaging validation criteria for SAR measurement is that, at all times, the time-averaged 1gSAR or 10gSAR versus time shall not exceed FCC limit of 1.6 W/kg for 1gSAR or 4.0 W/kg for 10gSAR (i.e., Eq. (3b)).

4 PD Time Averaging Validation Test Procedures

This chapter provides the test plan and test procedures for validating Qualcomm Smart Transmit feature for mmW transmission. For this EUT, millimeter wave (mmW) transmission is only in non-standalone mode, i.e., it requires an LTE link as anchor.

4.1 Test sequence for validation in mmW NR transmission

In 5G mmW NR transmission, the test sequence for validation is with the callbox requesting EUT's Tx power in 5G mmW NR at maximum power all the time.

4.2 Test configuration selection criteria for validating Smart Transmit feature

4.2.1 Test configuration selection for time-varying Tx power transmission

The Smart Transmit time averaging feature operation is independent of bands, modes, channels, and antenna configurations (beams) for a given technology. Hence, validation of Smart Transmit in any one band/mode/channel per technology is sufficient.

4.2.2 Test configuration selection for change in antenna configuration (beam)

The Smart Transmit time averaging feature operation is independent of bands, modes, channels, and antenna configurations (beams) for a given technology. Hence, validation of Smart Transmit with beam switch between any two beams is sufficient.

4.2.3 Test configuration selection for SAR vs. PD exposure switch during transmission

The Smart Transmit time averaging feature operation is independent of the nature of exposure (SAR vs. PD) and ensures total time-averaged RF exposure compliance. Hence, validation of Smart Transmit in any one band/mode/channel/beam for mmW + sub-6 (LTE) transmission is sufficient, where the exposure varies among SAR dominant scenario, SAR+PD scenario, and PD dominant scenario.

4.3 Test procedures for mmW radiated power measurements

Perform conducted power measurement (for f < 6GHz) and radiated power measurement (for f > 6GHz) for LTE + mmW transmission to validate Smart Transmit time averaging feature in the various transmission scenarios described in Section 2.

This section provides general conducted power measurement procedures to perform compliance test under dynamic transmission scenarios described in Section 2. In practice, an adjustment can be made in these procedures. The justification/clarification may be provided.

4.3.1 Time-varying Tx power scenario

The purpose of the test is to demonstrate the effectiveness of power limiting enforcement and that the time-averaged Tx power when converted into RF exposure values does not exceed the FCC limit at all times (see Eq. (2a), (2b) & (2c) in Section 2).

Test procedure:

1. Measure conducted Tx power corresponding to P_{limit} for LTE in selected band, and measure radiated Tx power corresponding to *input.power.limit* in desired mmW band/channel/beam by following below steps:
   a. Measure radiated power corresponding to mmW *input.power.limit* by setting up the EUT's Tx power in desired band/channel/beam at *input.power.limit* in Factory Test Mode (FTM). This test is performed in a calibrated anechoic chamber. Rotate the EUT to obtain maximum radiated Tx power, keep the EUT in this position and do not disturb the position of the EUT inside the anechoic chamber for the rest of this test.
   b. Reset EUT to place in online mode and establish radio link in LTE, measure conducted Tx power corresponding to LTE P_{limit} with Smart Transmit enabled and *Reserve_power_margin* set to 0 dB, callbox set to request maximum power.

Set *Reserve_power_margin* to actual (intended) value and reset power on EUT to enable Smart Transmit. With EUT setup for a mmW NR call in the desired/selected LTE band and mmW NR band, perform the following steps:

Establish LTE and mmW NR connection in desired band/channel/beam used in Step 1. As soon as the mmW connection is established, immediately request all-down bits on LTE link. With callbox requesting EUT's Tx power to be at maximum mmW power to test predominantly PD exposure scenario (as SAR exposure is less when LTE's Tx power is at low power).

After 120s, request LTE to go all-up bits for at least 100s. SAR exposure is dominant. There are two scenarios:

If $P_{limit} < P_{max}$ for LTE, then the RF exposure margin (provided to mmW NR) gradually runs out (due to high SAR exposure). This results in gradual reduction in the 5G mmW NR transmission power and eventually seized 5G mmW NR transmission when LTE goes to $P_{reserve}$ level.

If $P_{limit} \geq P_{max}$ for LTE, then the 5G mmW NR transmission's averaged power should gradually reduce but the mmW NR connection can sustain all the time (assuming TxAGC uncertainty = 0dB).

Record the conducted Tx power of LTE and radiated Tx power of mmW for the full duration of this test of at least 300s.

Once the measurement is done, extract instantaneous Tx power versus time for both LTE and mmW links. Convert the conducted Tx power for LTE into 1gSAR or 10gSAR value using Eq. (2a) and P_{limit} measured in Step 1.b, and then divide by FCC limit of 1.6 W/kg for 1gSAR or 4.0 W/kg for 10gSAR to obtain instantaneous normalized 1gSAR or 10gSAR versus time. Perform 100s running average to determine normalized 100s-averaged 1gSAR or 10gSAR versus time.

NOTE: In Eq.(2a), instantaneous Tx power is converted into instantaneous 1gSAR or 10gSAR value by applying the measured worst-case 1gSAR or 10gSAR value at P_{limit} for the corresponding technology/band/antenna/DSI reported in Part 1 report.

Similarly, convert the radiated Tx power for mmW into 4cm^{2}PD value using Eq. (2b) and the radiated Tx power limit (i.e., radiated Tx power at *input.power.limit*) measured in Step 1.a, then divide by FCC 4cm^{2}PD limit of 10W/m^2 to obtain instantaneous normalized 4cm^{2}PD versus time. Perform 4s running average to determine normalized 4s-averaged 4cm^{2}PD versus time.

NOTE: In Eq.(2b), instantaneous radiated Tx power is converted into instantaneous 4cm^{2}PD by applying the worst-case 4cm^{2}PD value measured at *input.power.limit* for the selected band/beam in Part 1 report.

Make one plot containing: (a) instantaneous conducted Tx power for LTE versus time, (b) computed 100s-averaged conducted Tx power for LTE versus time, (c) instantaneous radiated Tx power for mmW versus time, as measured in Step 2, (d) computed 4s-averaged radiated Tx power for mmW versus time, and (e) time-averaged conducted and radiated power limits for LTE and mmW radio using Eq. (5a) & (5b), respectively:

$$Time\ avearged\ LTE\ power\ limit = meas.P_{limit} + 10 \times \log(\frac{FCC\ SAR\ limit}{meas.SAR_Plimit}) \qquad (5a)$$

$$Time\ avearged\ mmW\ NR\ power\ limit = meas.EIRP_{input.power.limit} + 10 \times \log(\frac{FCC\ PD\ limit}{meas.PD_input.power.limit}) \qquad (5b)$$

where $meas.EIRP_{input.power.limit}$ and $meas.PD_input.power.limit$ correspond to measured EIRP at *input.power.limit* and measured power density at *input.power.limit*.

Make another plot containing: (a) computed normalized 100s-averaged 1gSAR or 10gSAR versus time determined in Step 3, (b) computed normalized 4s-averaged 4cm^{2}PD versus time determined in Step 4, and (c) corresponding total normalized time-averaged RF exposure (sum of steps (6.a) and (6.b)) versus time.

The validation criteria are, at all times, the total normalized time-averaged RF exposure versus time determined in Step 6.c shall not exceed the normalized limit of 1.0 of FCC requirement (i.e., Eq. (2c)).

4.3.2 Switch in SAR vs. PD exposure during transmission

This test is to demonstrate that Smart Transmit feature is independent of the nature of exposure (SAR vs. PD), accurately accounts for switching in exposures among SAR dominant, SAR+PD, and PD dominant scenarios, and ensures total time-averaged RF exposure compliance.

Test procedure:

1. Measure conducted Tx power corresponding to P_{limit} for LTE in selected band, and measure radiated Tx power corresponding to *input.power.limit* in desired mmW band/channel/beam by following below steps:

a. Measure radiated power corresponding to *input.power.limit* by setting up the EUT's Tx power in desired band/channel/beam at *input.power.limit* in FTM. This test is performed in a calibrated anechoic chamber. Rotate the EUT to obtain maximum radiated Tx power, keep the EUT in this position and do not disturb the position of the EUT inside the anechoic chamber for the rest of this test.

b. Reset EUT to place in online mode and establish radio link in LTE, measure conducted Tx power corresponding to LTE P_{limit} with Smart Transmit enabled and *Reserve_power_margin* set to 0 dB, callbox set to request maximum power.

Set *Reserve_power_margin* to actual (intended) value and reset power in EUT, with EUT setup for LTE + mmW call, perform the following steps:

a. Establish LTE (sub-6) and mmW NR connection with callbox.

b. As soon as the mmW connection is established, immediately request all-down bits on LTE link. Continue LTE (all-down bits) + mmW transmission for more than 100s duration to test predominantly PD exposure scenario (as SAR exposure is negligible from all-down bits in LTE).

c. After 120s, request LTE to go all-up bits, mmW transmission should gradually run out of RF exposure margin if LTE's $P_{limit} < P_{max}$ and seize mmW transmission (SAR only scenario); or mmW transmission should gradually reduce in Tx power and will sustain the connection if LTE's $P_{limit} > P_{max}$.

d. After 120s, request LTE to go all-down bits, mmW transmission should start getting back RF exposure margin and resume transmission again.

e. Record the conducted Tx power of LTE and radiated Tx power of mmW for the entire duration of this test of at least 300s.

Once the measurement is done, extract instantaneous Tx power versus time for both LTE and mmW links. Convert the conducted Tx power for LTE into 1gSAR or 10gSAR value using Eq. (2a) and P_{limit} measured in Step 1.b, and then divide by FCC limit of 1.6 W/kg for 1gSAR or 4.0 W/kg for 10gSAR to obtain instantaneous normalized 1gSAR or 10gSAR versus time. Perform 100s running average to determine normalized 100s-averaged 1gSAR or 10gSAR versus time.

NOTE: In Eq.(2a), instantaneous Tx power is converted into instantaneous 1gSAR or 10gSAR value by applying the measured worst-case 1gSAR or 10gSAR value at P_{limit} for the corresponding technology/band/antenna/DSI reported in Part 1 report.

Similarly, convert the radiated Tx power for mmW into 4cm^{2}PD value using Eq. (2b) and the radiated Tx power limit (i.e., radiated Tx power at *input.power.limit*) measured in Step 1.a, then divide this by FCC 4cm^{2}PD limit of 10W/m^2 to obtain instantaneous normalized 4cm^{2}PD versus time. Perform 4s running average to determine normalized 4s-averaged 4cm^{2}PD versus time.

NOTE: In Eq.(2b), instantaneous radiated Tx power is converted into instantaneous 4cm^{2}PD by applying the worst-case 4cm^{2}PD value measured at *input.power.limit* for the selected band/beam in Part 1 report.

Make one plot containing: (a) instantaneous conducted Tx power for LTE versus time, (b) computed 100s-averaged conducted Tx power for LTE versus time, (c) instantaneous radiated Tx power for mmW versus time, as measured in Step 2, (d) computed 4s-averaged radiated Tx power for mmW versus time, and (e) time-averaged conducted and radiated power limits for LTE and mmW radio using Eq. (5a) & (5b), respectively.

Make another plot containing: (a) computed normalized 100s-averaged 1gSAR or 10gSAR versus time determined in Step 3, (b) computed normalized 4s-averaged 4cm^{2}PD versus time determined in Step 4, and (c) corresponding total normalized time-averaged RF exposure (sum of steps (6.a) and (6.b)) versus time.

The validation criteria are, at all times, the total normalized time-averaged RF exposure versus time determined in Step 6.c shall not exceed the normalized limit of 1.0 of FCC requirement (i.e., Eq. (2c)).

4.3.3 Change in antenna configuration (beam)

This test is to demonstrate the correct power control by Smart Transmit during changes in antenna configuration (beam). Since the *input.power.limit* varies with beam, the Eq. (2a), (2b) and (2c) in Section 2 are written as below for transmission scenario having change in beam,

$$1g_or_10gSAR(t) = \frac{conducted_Tx_power(t)}{conducted_Tx_power_P_{limit}} * 1g_or_10gSAR_P_{limit} \quad (8a)$$

$$4cm^2PD_1(t) = \frac{radiated_Tx_power_1(t)}{radiated_Tx_power_input.power.limit_1} * 4cm^2PD_input.power.limit_1 \quad (8b)$$

$$4cm^2PD_2(t) = \frac{radiated_Tx_power_2(t)}{radiated_Tx_power_input.power.limit_2} * 4cm^2PD_input.power.limit_2 \quad (8c)$$

$$\frac{\frac{1}{T_{SAR}}\int_{t-T_{SAR}}^{t} 1g_or_10gSAR(t)dt}{FCC\ SAR\ limit} + \frac{\frac{1}{T_{PD}}\left[\int_{t-T_{PD}}^{t_1} 4cm^2\mathrm{PD}_1(t)dt + \int_{t_1}^{t} 4cm^2\mathrm{PD}_2(t)dt\right]}{FCC4cm^2\ PD\ limit} \leq 1 \quad (8d)$$

where, $conducted_Tx_power(t)$, $conducted_Tx_power_P_{limit}$, and $1g_or_10gSAR_P_{limit}$ correspond to the measured instantaneous conducted Tx power, measured conducted Tx power at P_{limit}, and measured *1gSAR or 10gSAR* values at P_{limit} corresponding to LTE transmission. Similarly, *radiated_Tx_power_1(t)*, *radiated_Tx_power_input.power.limit_1*, and *4cm^{2}PD_input.power.limit_1* correspond to the measured instantaneous radiated Tx power, radiated Tx power at *input.power.limit*, and *4cm^{2}PD* value at *input.power.limit* of beam 1; *radiated_Tx_power_2(t)*, *radiated_Tx_power_input.power.limit_2*, and *4cm^{2}PD_input.power.limit_2* correspond to the measured instantaneous radiated Tx power, radiated Tx power at *input.power.limit*, and *4cm^{2}PD* value at *input.power.limit* of beam 2 corresponding to mmW transmission.

Test procedure:

1. Measure conducted Tx power corresponding to P_{limit} for LTE in selected band, and measure radiated Tx power corresponding to *input.power.limit* in desired mmW band/channel/beam by following below steps:
    a. Measure radiated power corresponding to mmW *input.power.limit* by setting up the EUT's Tx power in desired band/channel at *input.power.limit* of beam 1 in FTM. Do not disturb the position of the EUT inside the anechoic chamber for the rest of this test. Repeat this Step 1.a for beam 2.
    b. Reset EUT to place in online mode and establish radio link in LTE, measure conducted Tx power corresponding to LTE P_{limit} with Smart Transmit enabled and *Reserve_power_margin* set to 0 dB, callbox set to request maximum power.

Set *Reserve_power_margin* to actual (intended) value and reset power in EUT, With EUT setup for LTE + mmW connection, perform the following steps:

a. Establish LTE (sub-6) and mmW NR connection in beam 1. As soon as the mmW connection is established, immediately request all-down bits on LTE link with the callbox requesting EUT's Tx power to be at maximum mmW power.
b. After beam 1 continues transmission for at least 20s, request the EUT to change from beam 1 to beam 2, and continue transmitting with beam 2 for at least 20s.
c. Record the conducted Tx power of LTE and radiated Tx power of mmW for the entire duration of this test.

Once the measurement is done, extract instantaneous Tx power versus time for both LTE and mmW links. Convert the conducted Tx power for LTE into 1gSAR or 10gSAR value using the similar approach described in Step 3 of Section 4.3.2. Perform 100s running average to determine normalized 100s-averaged 1gSAR versus time.

Similarly, convert the radiated Tx power for mmW NR into 4cm^{2}PD value using Eq. (8b), (8c) and the radiated Tx power limits (i.e., radiated Tx power at *input.power.limit*) measured in Step 1.a for beam 1 and beam 2, respectively, and then divide the resulted PD values by FCC 4cm^{2}PD limit of 10W/m^2 to obtain instantaneous normalized 4cm^{2}PD versus time for beam 1 and beam 2. Perform 4s running average to determine normalized 4s-averaged 4cm^{2}PD versus time.

NOTE: In Eq.(8b) and (8c), instantaneous radiated Tx power of beam 1 and beam 2 is converted into instantaneous 4cm^{2}PD by applying the worst-case 4cm^{2}PD value measured at the *input.power.limit* of beam 1 and beam 2 in Part 1 report, respectively.

Since the measured radiated powers for beam 1 and beam 2 in Step 1.a were performed at an arbitrary rotation of EUT in anechoic chamber, repeat Step 1.a of this procedure by rotating the EUT to determine maximum radiated power at *input.power.limit* in FTM mode for both beams separately. Re-scale the measured instantaneous radiated power in Step 2.c by the delta in radiated power measured in Step 5 and the radiated power measured in Step 1.a for plotting purposes in next Step. In other words, this step essentially converts measured instantaneous

radiated power during the measurement in Step 2 into maximum instantaneous radiated power for both beams. Perform 4s running average to compute 4s-avearged radiated Tx power. Additionally, use these EIRP values measured at *input.power.limit* at respective peak locations to determine the EIRP limits (using Eq. (5b)) for both these beams.

Make one plot containing: (a) instantaneous conducted Tx power for LTE versus time, (b) computed 100s-averaged conducted Tx power for LTE versus time, (c) instantaneous radiated Tx power for mmW versus time, as obtained in Step 5, (d) computed 4s-averaged radiated Tx power for mmW versus time, as obtained in Step 5, and (e) time-averaged conducted and radiated power limits for LTE and mmW radio, respectively.

Make another plot containing: (a) computed normalized 100s-averaged 1gSAR versus time determined in Step 3, (b) computed normalized 4s-averaged 4cm^{2}PD versus time determined in Step 4, and (c) corresponding total normalized time-averaged RF exposure (sum of steps (6.a) and (6.b)) versus time.

The validation criteria are, at all times, the total normalized time-averaged RF exposure versus time determined in Step 6.c shall not exceed the normalized limit of 1.0 of FCC requirement (i.e., (8d)).

4.4 Test procedure for time-varying PD measurements

The following steps are used to perform the validation through PD measurement for transmission scenario 1 described in Section 2:

1. Place the EUT on the cDASY6 platform to perform PD measurement in the worst-case position/surface for the selected mmW band/beam. In PD measurement, the callbox is set to request maximum Tx power from EUT all the time. Hence, “path loss” calibration between callbox antenna and EUT is not needed in this test.

Time averaging feature validation:

Measure conducted Tx power corresponding to P_{limit} for LTE in selected band, and measure point E-field corresponding to *input.power.limit* in desired mmW band/channel/beam by following the below steps:

i. Measure conducted Tx power corresponding to LTE P_{limit} with Smart Transmit <u>enabled</u> and *Reserve_power_margin* set to 0 dB, with callbox set to request maximum power.

ii. Measure point E-field at peak location of fast area scan corresponding to *input.power.limit* by setting up the EUT’s Tx power in desired mmW band/channel/beam at *input.power.limit* in FTM. Do not disturb the position of EUT and mmW cDASY6 probe.

Set *Reserve_power_margin* to actual value (i.e., intended value) and reset power on EUT, place EUT in online mode. With EUT setup for LTE (sub-6) + mmW NR call, as soon as the mmW NR connection is established, request all-down bits on LTE link. Continue LTE (all-down bits) + mmW transmission for more than 100s duration to test predominantly PD exposure scenario. After 120s, request LTE to go all-up bits, mmW transmission should gradually reduce. Simultaneously, record the conducted Tx power of LTE transmission using power meter and point E-field (in terms of ratio of $\frac{[pointE(t)]^2}{[pointE_input.power.limit]^2}$) of mmW transmission using cDASY6 E-field probe at peak location identified in Step 2.a.ii for the entire duration of this test of at least 300s.

Once the measurement is done, extract instantaneous conducted Tx power versus time for LTE transmission and $\frac{[pointE(t)]^2}{[pointE_input.power.limit]^2}$ ratio versus time from cDASY6 system for mmW transmission. Convert the conducted Tx power for LTE into 1gSAR or 10gSAR value using Eq. (4a) and P_{limit} measured in Step 2.a.i, and then divide this by FCC limit of 1.6 W/kg for 1gSAR or 4.0 W/kg for 10gSAR to obtain instantaneous normalized 1gSAR or 10gSAR versus time. Perform 100s running average to determine normalized 100s-averaged 1gSAR or 10gSAR versus time

NOTE: In Eq.(4a), instantaneous Tx power is converted into instantaneous 1gSAR or 10gSAR value by applying the measured worst-case 1gSAR or 10gSAR value at P_{limit} for the corresponding technology/band reported in Part 1 report.

Similarly, convert the point E-field for mmW transmission into 4cm^{2}PD value using Eq. (4b) and radiated power limit measured in Step 2.a.ii, and then divide this by FCC 4cm^{2}PD limit of 10W/m^2 to obtain instantaneous normalized 4cm^{2}PD versus time. Perform 4s running average to determine normalized 4s-averaged 4cm^{2}PD versus time.

Make one plot containing: (i) computed normalized 100s-averaged 1gSAR or 10gSAR versus time determined in Step 2.c, (ii) computed normalized 4s-averaged 4cm^{2}PD versus time determined in Step 2.d, and (iii) corresponding total normalized time-averaged RF exposure (sum of steps (2.e.i) and (2.e.ii)) versus time.

The validation criteria are, at all times, the total normalized time-averaged RF exposure versus time determined in Step 2.e.iii shall not exceed the normalized limit of 1.0 of FCC requirement (i.e., Eq. (4c)).

4.5 Test Case Reduction for Multiple Filings

For devices enabled with Smart Transmit feature, the tests listed in Section 2.0 are essential to verify time-averaging operation in a new integrated platform/model/design and should NOT be avoided. As highlighted in Section 2.0, the compliance demonstration under dynamic transmission scenarios is done via two types of measurement:

• Power measurement
• RF exposure measurement

The tests via power measurement are essential while the tests through RF exposure measurement are added for the purpose of gaining high confidence level. Therefore, Part 2 test case reduction can be considered for other filings using same chipset post full Part 2 test on the first filing.

Typically, OEMs may have multiple variants which uses the same chipset. Even though the same chipset and Smart Transmit algorithm are used in the new model, the new design with latest SW build needs to be tested to verify the integration. However, the number of test cases in Part 2 can be reduced in the case of multiple filings using same chipset (post full part 2 test on the first filing), i.e., the essential test cases in power measurement are required to ensure the Smart Transmit performs as expected in the new design, but the RF exposure measurement can be excluded. Furthermore, as described in Section 3.2.1, In smart transmit testing which two bands per technology are selected for time-varying Tx transmission test to provide high confidence. In this case, one band per technology can be considered as well to reduce test cases further.

In summary, for multiple filings with same chipset, the test case reduction proposal for Part 2 testing is:

1. Full set of tests in the first filing, i.e., both **power measurement** and **RF exposure measurement**, are required.
2. For all subsequent filings with the same chipset, only **power measurement** is required. In the case of time-varying Tx transmission test, only one band (instead of two bands) per technology is sufficient.

The manufacturer's first filing is FCC ID: PKRISGM2100 for sub-6GHz and mmWave, Both models are all use same Qualcomm modem supporting 2G/3G/4G/5G technologies. In this test report only power measurement is required. In the case of time-varying Tx transmission test, only one band (instead of two bands) per technology is sufficient.

5 Test Configurations

5.1 WWAN (sub-6) transmission

The Plimit values, corresponding to 1g SAR_design_target 0.79W/kg, for technologies and bands supported by EUT are derived in Part 1 report and summarized in Table 5-1. Note all P_{limit} power levels entered in Table 5-1 correspond to average power levels after accounting for duty cycle in the case of TDD modulation schemes (for e.g., GSM, LTE TDD & Sub6 NR TDD).

The device is enabled SA mode on FR1 25/41/71 by software, which the Plimit are all same as FR1 EN-DC and applies C2PC filing. In this report is to validate and demonstrate smart transmit behavior of FR1 SA mode.

Exposure conditions	SAR design target	W/kg
Body Exposure condition	1g SAR design target	0.79

Table 5-1: P_{limit} for supported technologies and bands (P_{limit} in EFS file)

Band	Antenna	Plimit*	Pmax * (dBm)
		Burst average Power	Time average
WCDMA II	0	23.0	23.0
WCDMA IV	0	17.6	23.0
WCDMA V	0	23.0	23.0
LTE Band 7	0	18.0	23.0
LTE Band 12/17	0	23.0	23.0
LTE Band 13	0	23.0	23.0
LTE Band 14	0	23.0	23.0
LTE Band 25/2	0	21.8	23.0
LTE Band 26/5	0	23.0	23.0
LTE Band 30	0	20.0	20.0
LTE Band 41/38(PC3)**	0	20.1	21.0
LTE Band 41 (PC2)**	0	21.7	21.9
LTE Band 48	4	18.5	16.5
LTE Band 66/4	0	16.7	23.0
LTE Band 71	0	23.0	23.0
LTE Band 2	8	21.3	23.0
LTE Band 66	8	22.8	23.0
Sub 6G N66	0	23.0	23.0
Sub 6G N71	0	23.0	23.0
Sub 6G N25/2	8	21.1	23.0
Sub 6G N41(PC3)**	8	19.4	23.0
Sub 6G N66	8	22.4	23.0

Remark: Ant 8 transmission only for LTE anchor band of 5GNR EN-DC combination.

*Pmax is used for RF tune up procedure. The maximum allowed output power is equal to Pmax + device uncertainty.

**All Plimit power levels entered in the Table correspond to average power levels after accounting for duty cycle in the case TDD modulation schemes (for e.g., GSM & LTE TDD & NR TDD).

Based on selection criteria described in Section 3.2.1, the selected technologies/bands for testing time-varying test sequences are listed in Table 5-2, the *Reserve_power_margin* (dB) for PKRISGM2000B is set to 3dB in EFS, and is used in Part 2 test.

The radio configurations used in Part 2 test for selected technologies, bands, DSIs and antennas are listed in Table 5-2. The corresponding worst-case radio configuration 1gSAR or 10gSAR values for selected technology/band/DSI are extracted from Part 1 report and are listed in the last column of Table 5-2.

Based on equations (1a), (2a), (3a) and (4a), it is clear that Part 2 testing outcome is normalized quantity, which implies that it can be applied to any radio configuration within a selected technology/band/DSI. Thus, as long as applying the worst-case SAR obtained from the worst radio configuration in Part 1 testing to calculate time-varying SAR exposure in equations (1a), (2a), (3a) and (4a), the accuracy in compliance demonstration remains the same.

For voice calls, Smart Transmit behavior is limits the maximum Tx power to Plimit.

Table 5-2: Radio configurations selected for Part 2 test

Test case #	Test scenario	Tech	Band	Ant	Channel	Freq (MHz)	BW	RB size	RB offset	mode	position	Position details	Part 1, SAR@Plimit 1-g SAR (W/kg)
1	Time-Varying Tx power transmission	5G NR	n41	8	518598	2592.99	100	1	1	BPSK	Top Side	Hotspot , 10mm	0.728
2		5G NR	n25	8	372000	1860	20	1	53	BPSK	Top Side	Hotspot , 10mm	0.732

The maximum 1gSAR/or 10gSAR among all exposure scenarios is used in Smart Transmit feature for time averaging operation.

5GNR FR1 SA mode operates at the same power of NSA mode, therefore SAR results in the original grant remain representative. Part 2 testing is performed for FR1 SA mode, while time average SAR values are taken from the original Part 1 SAR report.

Based on the selection criteria described in Section 3.2, the radio configurations for the Tx varying transmission test cases listed in Section 2 are:

1. Technologies and bands for time-varying Tx power transmission: The test case 1~2 listed in Table 5-2 are selected to test with the test sequences defined in Section 3.1 in both time-varying conducted power measurement and time-varying SAR measurement.

6 Conducted Power Test Results for Sub-6 Smart Transmit Feature Validation

6.1 Measurement setup

The Rohde & Schwarz CMW500 callbox is used in this test. The test setup schematic are shown in Figures 6-1. For single antenna measurement, one port (RF1 COM) of the callbox is connected to the RF port of the EUT using a directional coupler. For antenna & technology switch measurement, two ports (RF1 COM and RF3 COM) of the callbox used for signaling two different technologies are connected to a combiner, which is in turn connected to a directional coupler. The other end of the directional coupler is connected to a splitter to connect to two RF ports of the EUT corresponding to the two antennas of interest. In both the setups, power meter is used to tap the directional coupler for measuring the conducted output power of the EUT. For time averaging validation test (Section 3.3.1), call drop test (Section 3.3.2), and DSI switch test (Section 3.3.4), only RF1 COM port of the callbox is used to communicate with the EUT. For technology/band switch measurement (Section. 3.3.3), both RF1 COM and RF3 COM port of callbox are used to switch from one technology communicating on RF1 COM port to another technology communicating on RF3 COM port. All the path losses from RF port of EUT to the callbox RF COM port and to the power meter are calibrated and automatically entered as offsets in the callbox and the power meter via test scripts on the PC used to control callbox and power meter.

LTE+Sub6 NR test setup:
The Keysight UXME7515B callbox is used in this test. If LTE conducted port and Sub6 NR conducted port are same on this EUT (i.e., they share the same antenna), therefore, low-/high-pass filter are used to separate LTE and Sub6 NR signals for power meter measurement via directional couplers, as shown in below Figure 6-1 C (Appendix F – Test Setup Photo).
All the path losses from RF port of DUT to the callbox RF COM port and to the power meter are calibrated and automatically entered as offsets in the callbox and the power meter via test scripts on the PC used to control callbox and power meter.

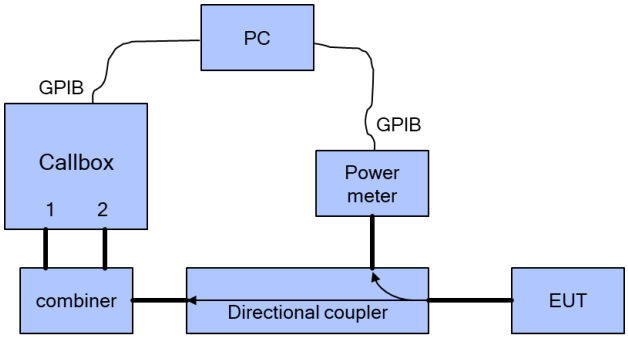

(a)

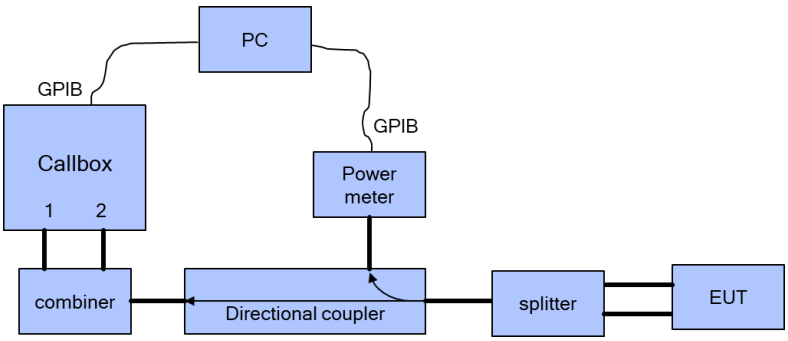

(b)

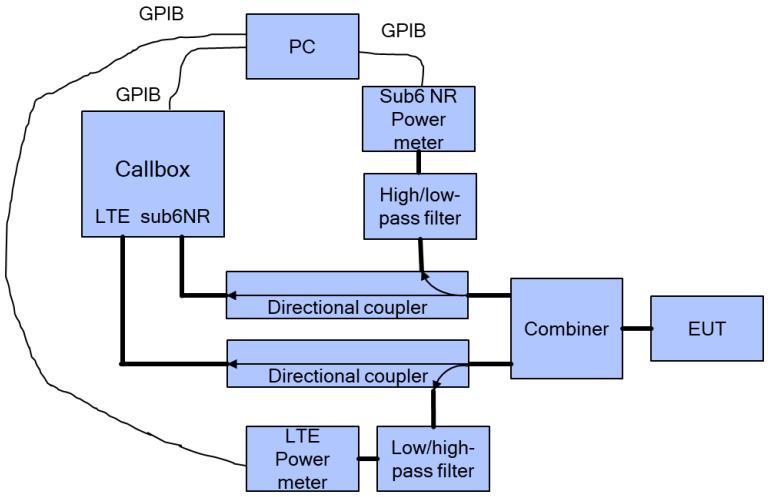

(c)

Figure 6-1 Conducted power measurement setup

Both the callbox and power meter are connected to the PC using GPIB cables. Two test scripts are custom made for automation, and the test duration set in the test scripts is 500 seconds.

For time-varying Tx power measurement, the PC runs the 1st test script to send GPIB commands to control the callbox's requested power versus time, while at the same time to record the conducted power measured at EUT RF port using the power meter. The commands sent to the callbox to request power are:

- 0dBm for 100 seconds
- test sequence 1 or test sequence 2 (defined in Section 3.1 and generated in Section 3.2.1), for 360 seconds
- stay at the last power level of test sequence 1 or test sequence 2 for the remaining time.

Power meter readings are periodically recorded every 100ms. A running average of this measured Tx power over 100 seconds is performed in the post-data processing to determine the 100s-time averaged power.

For call drop, technology/band/antenna switch, and DSI switch tests, after the call is established, the callbox is set to request the EUT's Tx power at 0dBm for 100 seconds while simultaneously starting the 2nd test script runs at the same time to start recording the Tx power measured at EUT RF port using the power meter. After the initial 100 seconds since starting the Tx power recording, the callbox is set to request maximum power from the EUT for the rest of the test. Note that the call drop/re-establish, or technology/band/antenna switch or DSI switch is manually performed when the Tx power of EUT is at $P_{reserve}$ level. See Section 3.3 for detailed test procedure of call drop test, technology/band/antenna switch test and DSI switch test.

6.2 P_{limit} and P_{max} measurement results

The measured P_{limit} for all the selected radio configurations given in Table 5-2 are listed in below Table 6-1. P_{max} was also measured for radio configurations selected for testing time-varying Tx power transmission scenarios in order to generate test sequences following the test procedures in Section 3.1.

Table 6-1: Measured P_{limit} and P_{max} of selected radio configurations

Test case #	Test scenario	Tech	Band	Ant	Channel	Freq (MHz)	BW	RB size	RB offset	mode	position	Position details	Plimit EFS setting(dBm)	target pmax (dBm)	measured plimit (dBm)	measured pmax (dBm)
1	Time-Varying Tx power transmission	5G NR	n41	8	518598	2592.99	100	1	1	BPSK	Top Side	Hotspot , 10mm	19.4	23	19.5	22.5
2		5G NR	n25	8	372000	1860	20	1	53	BPSK	Top Side	Hotspot , 10mm	21.1	23	20	23.7

Note: the device uncertainty of P_{max} is +1dB/-1dB as provided by manufacturer.

.

6.3 Time-varying Tx power measurement results

The measurement setup is shown in Figures 6-1(a) and 6-1(c). The purpose of the time-varying Tx power measurement is to demonstrate the effectiveness of power limiting enforcement and that the time-averaged Tx power when represented in time-averaged 1gSAR or 10gSAR values does not exceed FCC limit as shown in Eq. (1a) and (1b), rewritten below:

$$1g_or_10gSAR(t) = \frac{conducted_Tx_power(t)}{conducted_Tx_power_P_{limit}} * 1g_or_10gSAR_P_{limit}$$

(1a)

$$\frac{\frac{1}{T_{SAR}}\int_{t-T_{SAR}}^{t} 1g_or_10gSAR(t)dt}{FCC\ SAR\ limit} \leq 1 \qquad (1b)$$

where, $conducted_Tx_power(t)$, $conducted_Tx_power_P_{limit}$, and $1g_or_10gSAR_P_{limit}$ correspond to the measured instantaneous conducted Tx power, measured conducted Tx power at P_{limit}, and measured *1gSAR* and *10gSAR* values at P_{limit} reported in Part 1 test (listed in Table 5-2 of this report as well).

Following the test procedure in Section 3.3, the conducted Tx power measurement for all selected configurations are reported in this section. In all the conducted Tx power plots, the dotted line represents the requested power by callbox (test sequence 1 or test sequence 2), the blue curve represents the instantaneous conducted Tx power measured using power meter, the green curve represents time-averaged power and red line represents the conducted power limit that corresponds to FCC limit of 1.6 W/kg for 1gSAR or 4.0 W/kg for 10gSAR.

Similarly, in all the 1g or 10gSAR plots (when converted using Eq. (1a)), the green curve represents the 100s/60s-time averaged 1gSAR or 10gSAR value calculated based on instantaneous 1gSAR or 10gSAR; and the red line limit represents the FCC limit of 1.6 W/kg for 1gSAR or 4.0 W/kg for 10gSAR.

6.3.1 5G NR n41

Test result for test sequence 1:

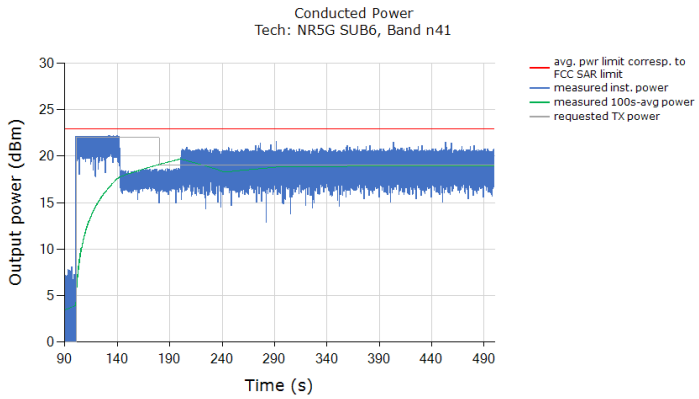

Above time-averaged conducted Tx power is converted/calculated into time-averaged 1gSAR using Equation (1a) and plotted below to demonstrate that the time-averaged 1gSAR versus time does not exceed the FCC limit of 1.6 W/kg for 1gSAR:

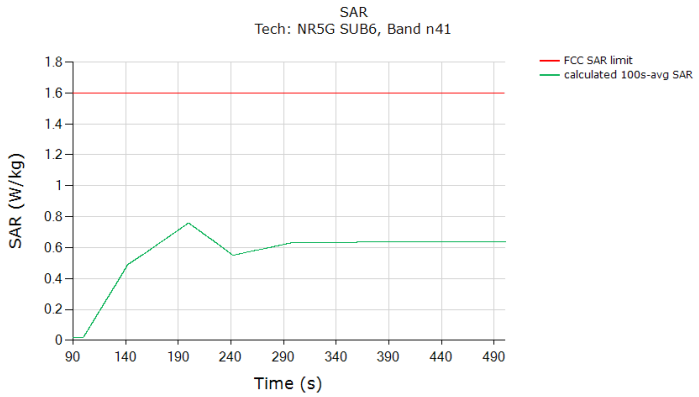

	(W/kg)
FCC 1gSAR limit	1.6
Max 100s-time averaged 1gSAR (green curve)	0.759
Validated: Max time averaged SAR (green curve) does not exceed SAR design target +1dB device uncertainty	

Test result for test sequence 2:

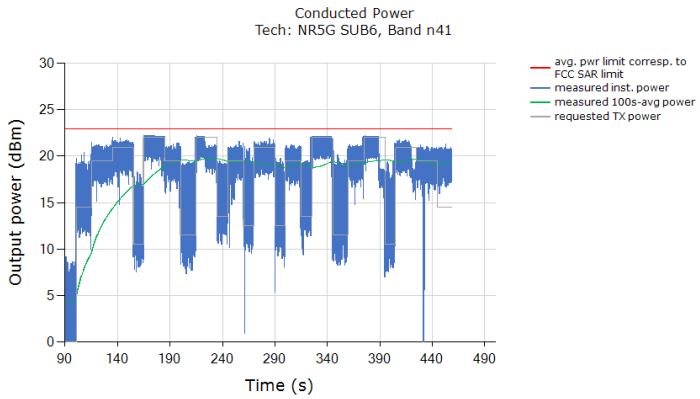

Above time-averaged conducted Tx power is converted/calculated into time-averaged 1gSAR using Equation (1a) and plotted below to demonstrate that the time-averaged 1gSAR versus time does not exceed the FCC limit of 1.6W/kg for 1gSAR:

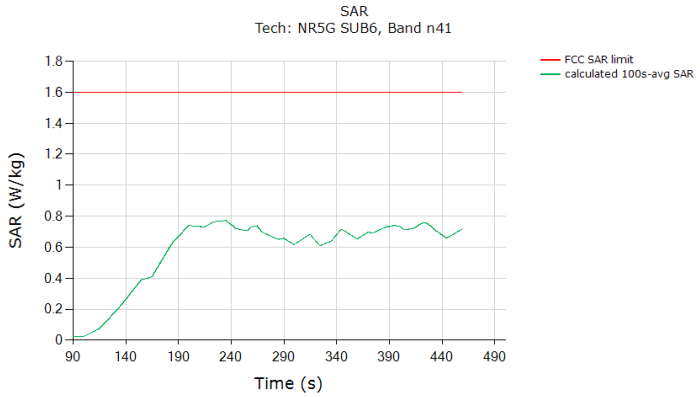

	(W/kg)
FCC 1gSAR limit	1.6
Max 100s-time averaged 1gSAR (green curve)	0.773
Validated: Max time averaged SAR (green curve) does not exceed SAR design target +1dB device uncertainty	

6.3.2 5G NR n25

Test result for test sequence 1:

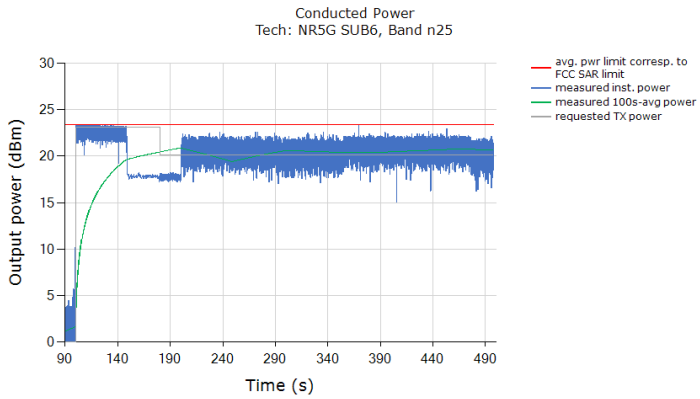

Above time-averaged conducted Tx power is converted/calculated into time-averaged 1gSAR using Equation (1a) and plotted below to demonstrate that the time-averaged 1gSAR versus time does not exceed the FCC limit of 1.6 W/kg for 1gSAR:

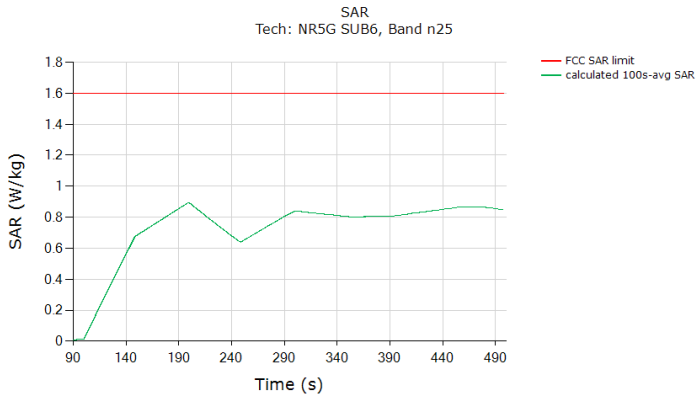

	(W/kg)
FCC 1gSAR limit	1.6
Max 100s-time averaged 1gSAR (green curve)	0.896
Validated: Max time averaged SAR (green curve) does not exceed SAR design target +1dB device uncertainty	

Test result for test sequence 2:

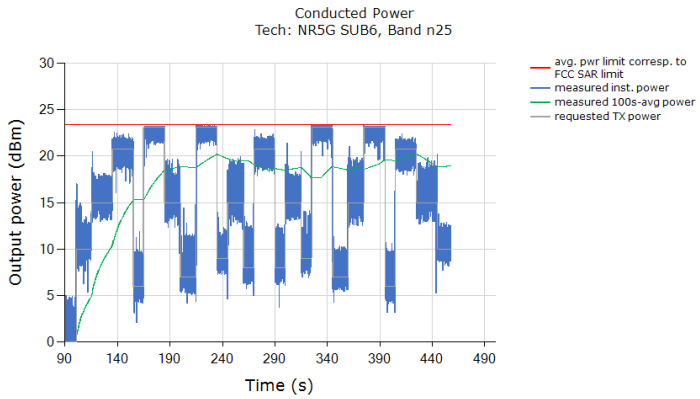

Above time-averaged conducted Tx power is converted/calculated into time-averaged 1gSAR using Equation (1a) and plotted below to demonstrate that the time-averaged 1gSAR versus time does not exceed the FCC limit of 1.6W/kg for 1gSAR:

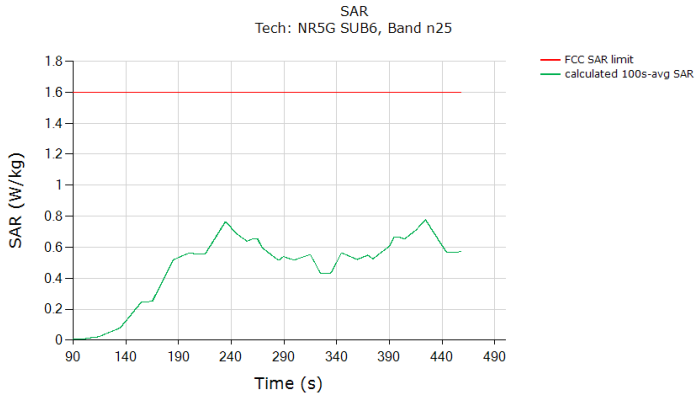

	(W/kg)
FCC 1gSAR limit	1.6
Max 100s-time averaged 1gSAR (green curve)	0.776
Validated: Max time averaged SAR (green curve) does not exceed SAR design target +1dB device uncertainty	

7 SAR Test Results for Sub-6 Smart Transmit Feature Validation

7.1 Measurement setup

The measurement setup is similar to normal SAR measurements (see Appendix E). The difference in SAR measurement setup for time averaging feature validation is that the callbox is signaling in close loop power control mode (instead of requesting maximum power in open loop control mode) and callbox is connected to the PC using GPIB so that the test script executed on PC can send GPIB commands to control the callbox's requested power over time (test sequence). The same test script used in conducted setup for time-varying Tx power measurements is also used in this section for running the test sequences during SAR measurements, and the recorded values from the disconnected power meter by the test script were discarded.

As mentioned in Section 3.4, for EUT to follow TPC command sent from the callbox wirelessly, the "path loss" between callbox antenna and the EUT needs to be very well calibrated. Since the SAR chamber is in uncontrolled environment, precautions must be taken to minimize the environmental influences on "path loss". Similarly, in the case of time-varying SAR measurements in Sub6 NR (with LTE as anchor), "path loss" between callbox antenna and the EUT needs to be carefully calibrated for both LTE link as well as for Sub6 NR link.

The EUT is placed in worst-case position according to Table 5-2.

7.2 SAR measurement results for time-varying Tx power transmission scenario

Following Section 3.4 procedure, time-averaged SAR measurements are conducted using EX3DV4 probe at peak location of area scan over 500 seconds. cDASY6 system verification for SAR measurement is provided in Appendix C, and the associated SPEAG certificates are attached in Appendix D.

SAR probe integration times depend on the communication signal being tested. Integration times used by SPEAG for their probe calibrations can be downloaded from here (integration time is listed on the bottom of the first page for each tech):

https://www.speag.com/assets/downloads/services/cs/UIDSummary171205.pdf

Since the sampling rate used by cDASY6 for pointSAR measurements is not in user control, the number of points in 100s or 60s interval is determined from the scan duration setting in cDASY6 time-average pointSAR measurement by (100s or 60s / cDASY6_scan_duration * total number of pointSAR values recorded). Running average is performed over these number of points in excel spreadsheet to obtain 100s-/60s-averaged pointSAR.

Following Section 3.4, for each of selected technology/band (listed in Table 5-2):

3. With *Reserve_power_margin* set to 0 dB, area scan is performed at P_{limit}, and time-averaged pointSAR measurements are conducted to determine the pointSAR at P_{limit} at peak location, denoted as $pointSAR_{Plimit}$.
4. With *Reserve_power_margin* set to actual (intended) value, two more time-averaged pointSAR measurements are performed at the same peak location for test sequences 1 and 2.

To demonstrate compliance, all the pointSAR measurement results were converted into 1gSAR or 10gSAR values by using Equation (3a), rewritten below:

$$1g_or_10gSAR(t) = \frac{pointSAR(t)}{pointSAR_P_{limit}} * 1g_or_10gSAR_P_{limit} \qquad (3a)$$

where, $pointSAR(t)$, $pointSAR_P_{limit}$, and $1g_or_10gSAR_P_{limit}$ correspond to the measured instantaneous point SAR, measured point SAR at P_{limit} from above step 1 and 2, and measured *1gSAR* or 10gSAR values at P_{limit} obtained from Part 1 report and listed in Table 5-2 in Section 5.1 of this report.

7.2.1 5G NR n41 SAR test results

SAR test results for test sequence 1:

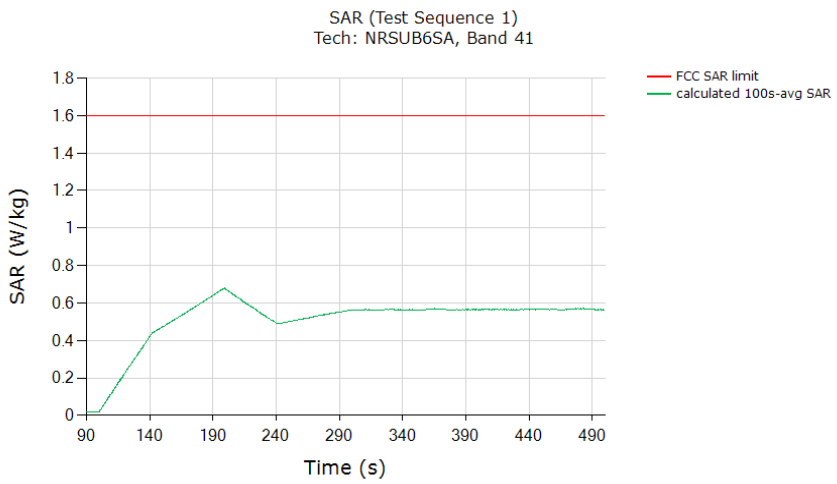

	(W/kg)
FCC 1gSAR limit	1.6
Max 100s-time averaged 1gSAR (green curve)	0.679
Validated: Max time averaged SAR (green curve) does not exceed measured SAR at Plimit +1dB device uncertainty	

SAR test results for test sequence 2:

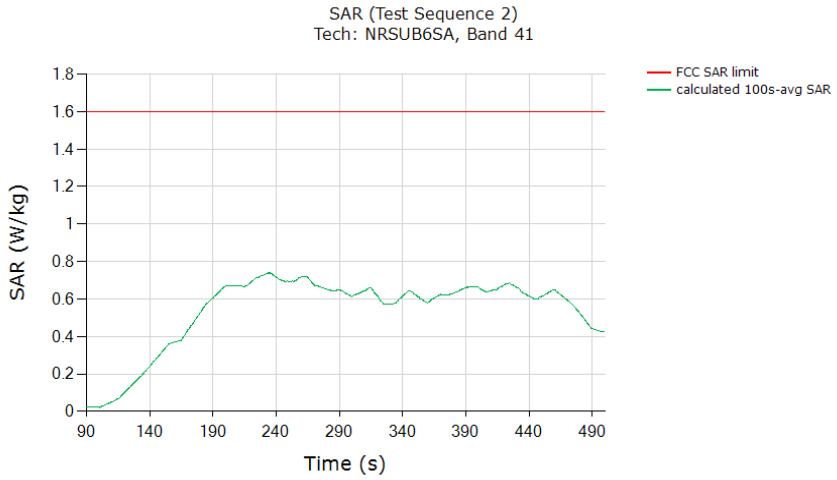

	(W/kg)
FCC 1gSAR limit	1.6
Max 100s-time averaged 1gSAR (green curve)	0.739
Validated: Max time averaged SAR (green curve) does not exceed measured SAR at Plimit +1dB device uncertainty	

7.2.2 5G NR n25 SAR test results

SAR test results for test sequence 1:

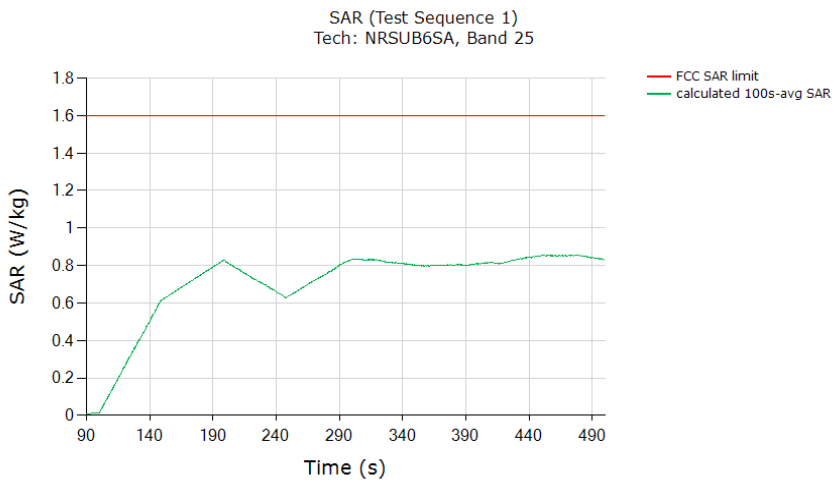

	(W/kg)
FCC 1gSAR limit	1.6
Max 100s-time averaged 1gSAR (green curve)	0.856
Validated: Max time averaged SAR (green curve) does not exceed measured SAR at Plimit +1dB device uncertainty	

SAR test results for test sequence 2:

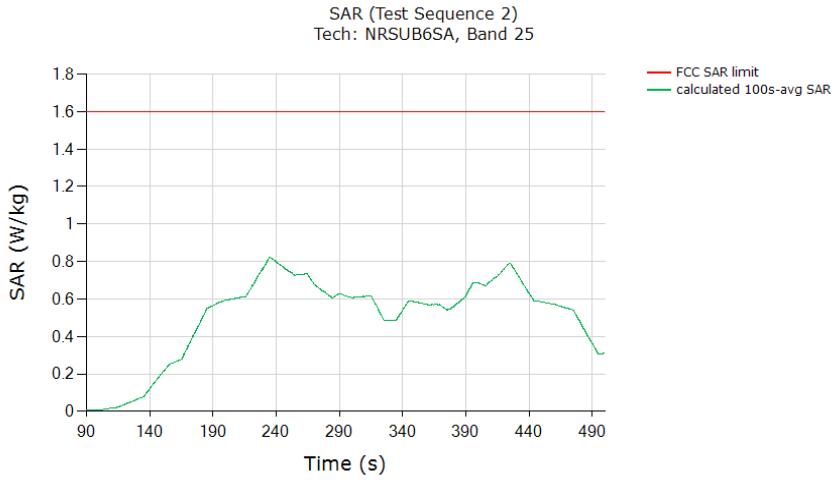

	(W/kg)
FCC 1gSAR limit	1.6
Max 100s-time averaged 1gSAR (green curve)	0.822
Validated: Max time averaged SAR (green curve) does not exceed measured SAR at Plimit +1dB device uncertainty	

8 Conclusions

Qualcomm Smart Transmit feature employed in this EUT has been validated through the conducted/radiated power measurement.

As demonstrated in this report, the power limiting enforcement is effective and the total normalized time-averaged RF exposure does not exceed 1.0 for all the transmission scenarios described in Section 2. Therefore, the EUT complies with FCC RF exposure requirement.

Appendix A. Test Sequences

1. Test sequence is generated based on below parameters of the EUT:

Measured maximum power (P_{max})

Measured Tx_power_at_SAR_design_target (P_{limit})

Reserve_power_margin (dB)

- $P_{reserve}$ (dBm) = measured P_{limit} (dBm) – Reserve_power_margin (dB)

SAR_time_window (100s for FCC)

Test Sequence 1 Waveform:

Based on the parameters above, the Test Sequence 1 is generated with one transition between high and low Tx powers. Here, high power = P_{max}; low power = $P_{max}/2$, and the transition occurs after 80 seconds at high power P_{max}. As long as the power enforcement is taking into effective during one 100s/60s time window, the validation test with this defined test sequence 1 is valid, otherwise, select other radio configuration (band/DSI within the same technology group) having lower P_{limit} for this test. The Test sequence 1 waveform is shown below:

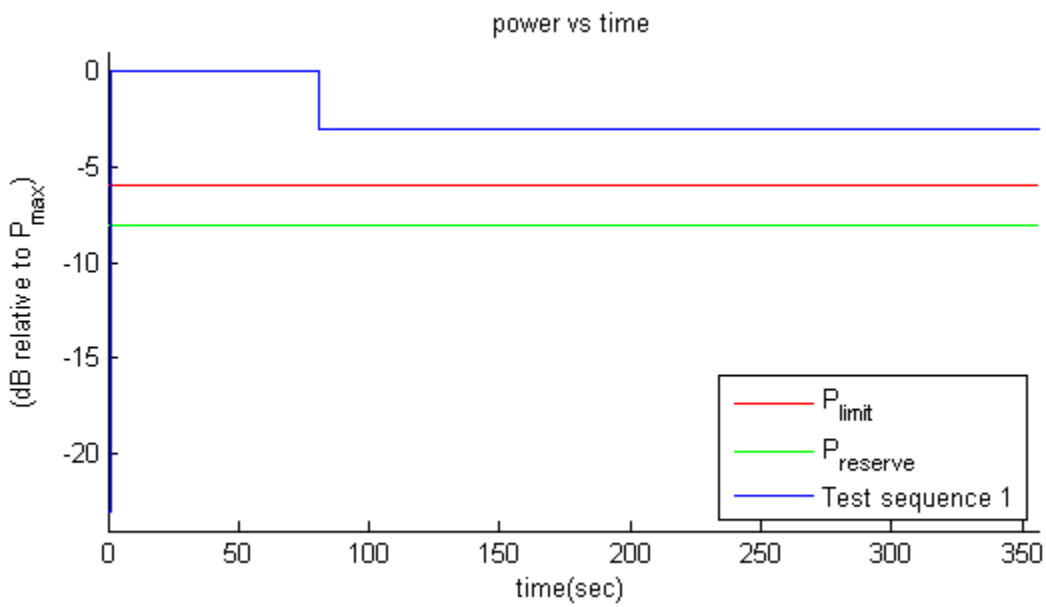

Figure 0-1 Test sequence 1 waveform

Test Sequence 2 Waveform:

Based on the parameters in A-1, the Test Sequence 2 is generated as described in Table 10-1, which contains two 170 second-long sequences (yellow and green highlighted rows) that are mirrored around the center row of 20s, resulting in a total duration of 360 seconds:

Table 0-1 Test Sequence 2

Time duration (seconds)	dB relative to P_{limit} or $P_{reserve}$
15	$P_{reserve} - 2$
20	P_{limit}
20	$(P_{limit} + P_{max})/2$ averaged in mW and rounded to nearest 0.1 dB step
10	$P_{reserve} - 6$
20	P_{max}
15	P_{limit}
15	$P_{reserve} - 5$
20	P_{max}
10	$P_{reserve} - 3$
15	P_{limit}
10	$P_{reserve} - 4$
20	$(P_{limit} + P_{max})/2$ averaged in mW and rounded to nearest 0.1 dB step
10	$P_{reserve} - 4$
15	P_{limit}
10	$P_{reserve} - 3$
20	P_{max}
15	$P_{reserve} - 5$
15	P_{limit}
20	P_{max}
10	$P_{reserve} - 6$
20	$(P_{limit} + P_{max})/2$ averaged in mW and rounded to nearest 0.1 dB step
20	P_{limit}
15	$P_{reserve} - 2$

The Test Sequence 2 waveform is shown in Figure A-2.

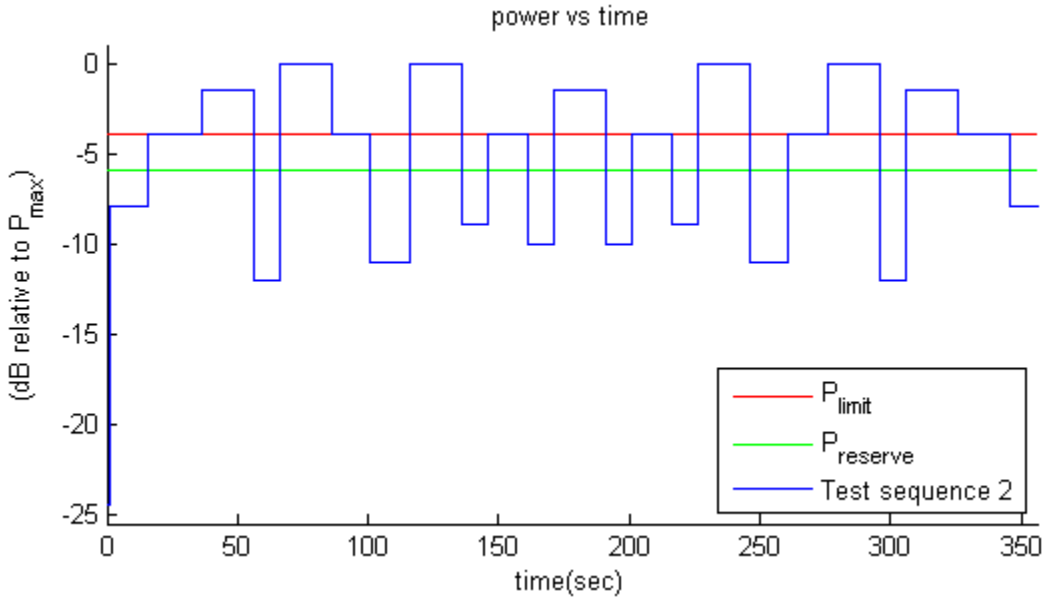

Appendix B. Test Procedures for sub6 NR + LTE Radio

Appendix B provides the test procedures for validating Qualcomm Smart Transmit feature for LTE + Sub6 NR non-standalone (NSA) mode transmission scenario, where sub-6GHz LTE link acts as an anchor.

1 Time-varying Tx power test for sub6 NR in NSA mode

Follows Section 3.2.1 to select test configurations for time-varying test. This test is performed with two pre-defined test sequences (described in Section 3.1) applied to Sub6 NR (with LTE on all-down bits or low power for the entire test after establishing the LTE+Sub6 NR call with the callbox). Follow the test procedures described in Section 3.3.1 to demonstrate the effectiveness of power limiting enforcement and that the time averaged Tx power of Sub6 NR when converted into 1gSAR values does not exceed the regulatory limit at all times (see Eq. (1a) and (1b)). Sub6 NR response to test sequence1 and test sequence2 will be similar to other technologies (say, LTE), and are shown in Sections 6.3.7 and 6.3.8.

2 Switch in SAR exposure between LTE vs. Sub6 NR during transmission

This test is to demonstrate that Smart Transmit feature accurately accounts for switching in exposures among SAR for LTE radio only, SAR from both LTE radio and sub6 NR, and SAR from sub6 NR only scenarios, and ensures total time-averaged RF exposure compliance with FCC limit.

Test procedure:

1. Measure conducted Tx power corresponding to P_{limit} for LTE and sub6 NR in selected band. Test condition to measure conducted P_{limit} is:
   - Establish device in call with the callbox for LTE in desired band. Measure conducted Tx power corresponding to LTE P_{limit} with Smart Transmit <u>enabled</u> and *Reserve_power_margin* set to 0 dB, callbox set to request maximum power.
   - Repeat above step to measure conducted Tx power corresponding to Sub6 NR $\underline{P_{limit}}$. If testing LTE+Sub6 NR in non-standalone mode, then establish LTE+Sub6 NR call with callbox and request all down bits for radio1 LTE. In this scenario, with callbox requesting maximum power from Sub6 NR, measured conducted Tx power corresponds to radio2 $\underline{P_{limit}}$ (as radio1 LTE is at all-down bits)

2. Set *Reserve_power_margin* to actual (intended) value with EUT setup for LTE + Sub6 NR call. First, establish LTE connection in all-up bits with the callbox, and then Sub6 NR connection is added with callbox requesting UE to transmit at maximum power in Sub6 NR. As soon as the Sub6 NR connection is established, request all-down bits on LTE link (otherwise, Sub6 NR will not have sufficient RF exposure margin to sustain the call with LTE in all-up bits). Continue LTE (all-down bits)+Sub6 NR transmission for more than one time-window duration to test predominantly Sub6 NR SAR exposure scenario (as SAR exposure is negligible from all-down bits in

LTE). After at least one time-window, request LTE to go all-up bits to test LTE SAR and Sub6 NR SAR exposure scenario. After at least one more time-window, drop (or request all-down bits) Sub6 NR transmission to test predominantly LTE SAR exposure scenario. Continue the test for at least one more time-window. Record the conducted Tx powers for both LTE and Sub6 NR for the entire duration of this test.

3. Once the measurement is done, extract instantaneous Tx power versus time for both LTE and Sub6 NR links. Similar to technology/band switch test in Section 3.3.3, convert the conducted Tx power for both these radios into 1gSAR value (see Eq. (6a) and (6b)) using corresponding technology/band P_{limit} measured in Step 1, and then perform 100s running average to determine time-averaged 1gSAR versus time as illustrated in Figure 3-1.
4. Make one plot containing: (a) instantaneous Tx power versus time measured in Step 2.
5. Make another plot containing: (a) instantaneous 1gSAR versus time determined in Step 3, (b) computed time-averaged 1gSAR versus time determined in Step 3, and (c) corresponding regulatory $1gSAR_{limit}$ of 1.6W/kg.

The validation criteria is, at all times, the time-averaged 1gSAR versus time shall not exceed the regulatory $1gSAR_{limit}$ of 1.6W/kg.

Appendix C. Equipment list

1 The system to be used for the near field power density measurement

- SPEAG DASY6 system
- SPEAG cDASY6 5G module software
- EUmmWVx probe
- 5G Phantom cover

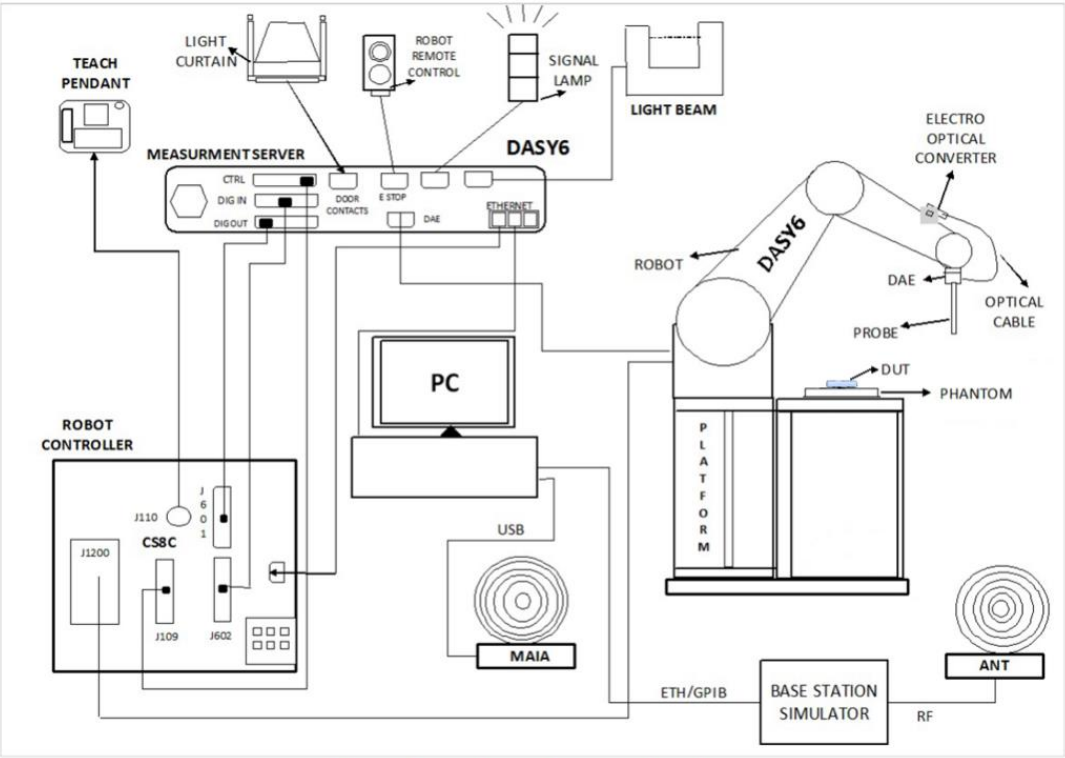

2 Test Side Location

Sporton Lab and below test site location are accredited to ISO 17025 by Taiwan Accreditation Foundation (TAF code: 1190) and the FCC designation No. TW1190 under the FCC 2.948(e) by Mutual Recognition Agreement (MRA) in FCC test

Test Site	SPORTON INTERNATIONAL INC. EMC & Wireless Communications Laboratory
Test Site Location	TW1190 No.52, Huaya 1st Rd., Guishan Dist., Taoyuan City 333, Taiwan
Test Site No.	SAR06-HY

3 SAR E-Field Probe

Construction	Symmetric design with triangular core Built-in shielding against static charges PEEK enclosure material (resistant to organic solvents, e.g., DGBE)	
Frequency	10 MHz – >6 GHz Linearity: ±0.2 dB (30 MHz – 6 GHz)	
Directivity	±0.3 dB in TSL (rotation around probe axis) ±0.5 dB in TSL (rotation normal to probe axis)	
Dynamic Range	10 µW/g – >100 mW/g Linearity: ±0.2 dB (noise: typically <1 µW/g)	
Dimensions	Overall length: 337 mm (tip: 20 mm) Tip diameter: 2.5 mm (body: 12 mm) Typical distance from probe tip to dipole centers: 1 mm	

4 Data Acquisition Electronics (DAE)

The data acquisition electronics (DAE) consists of a highly sensitive electrometer-grade preamplifier with auto-zeroing, a channel and gain-switching multiplexer, a fast 16 bit AD-converter and a command decoder and control logic unit. Transmission to the measurement server is accomplished through an optical downlink for data and status information as well as an optical uplink for commands and the clock.

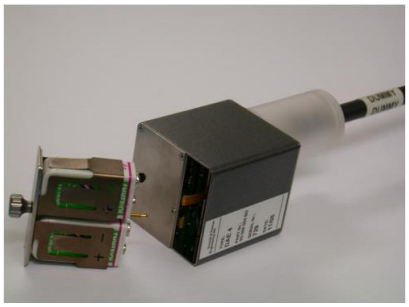

The input impedance of the DAE is 200 MOhm; the inputs are symmetrical and floating. Common mode rejection is above 80 dB.

5 Test Equipment List

Manufacturer	Name of Equipment	Type/Model	Serial Number	Calibration	
				Last Cal.	Due Date
SPEAG	1900MHz System Validation Kit(2)	D1900V2	5d041	Sep. 11, 2018	Sep. 08, 2021
SPEAG	2600MHz System Validation Kit(2)	D2600V2	1008	Aug. 31, 2018	Aug. 28, 2021
SPEAG	Data Acquisition Electronics	DAE3	577	Sep. 16, 2020	Sep. 15, 2021
SPEAG	Dosimetric E-Field Probe	EX3DV4	3931	Oct. 22, 2020	Oct. 21, 2021
Keysight	5G Wireless Test Platform	E7515B	MY59321826	Feb. 14, 2020	Feb. 13, 2021
R&S	Base Station	CMW500	149637	Aug. 15, 2020	Aug. 14, 2021
R&S	Power Sensor	NRP50S	101253	Jun. 02, 2020	Jun. 01, 2021
R&S	Power Sensor	NRP8S	103999	Jan. 13, 2020	Jan. 12, 2021
Testo	Hygro meter	608-H1	45196600	Nov. 10, 2020	Nov. 09, 2021
Anritsu	Spectrum Analyzer	MS2830A	6201396378	Jun. 30, 2020	Jun. 29, 2021
Anritsu	Signal Generator	MG3710A	6201502524	Nov. 11, 2020	Nov. 10, 2021
ATM	500M-18GHz Dual Directional Coupler	C122H-10	P610410z-02	Note 1	
ATM	500M-18GHz Dual Directional Coupler	C122H-10	U459808-01	Note 1	
Woken	Attenuator 1	WK0602-XX	N/A	Note 1	
PE	Attenuator 2	PE7005-10	N/A	Note 1	
PE	Attenuator 3	PE7005- 3	N/A	Note 1	

General Note:

1. Prior to system verification and validation, the path loss from the signal generator to the system check source and the power meter, which includes the amplifier, cable, attenuator and directional coupler, was measured by the network analyzer. The reading of the power meter was offset by the path loss difference between the path to the power meter and the path to the system check source to monitor the actual power level fed to the system check source.
2. The dipole calibration interval can be extended to 3 years with justification according to KDB 865664 D01. The dipoles are also not physically damaged, or repaired during the interval. The justification data in appendix C can be found which the return loss is < -20dB, within 20% of prior calibration, the impedance is within 5 ohm of prior calibration for each dipole.

6 SAR system verification and validation

6.1 Tissue Verification

The following tissue formulations are provided for reference only as some of the parameters have not been thoroughly verified. The composition of ingredients may be modified accordingly to achieve the desired target tissue parameters required for routine SAR evaluation.

Frequency (MHz)	Water (%)	Sugar (%)	Cellulose (%)	Salt (%)	Preventol (%)	DGBE (%)	Conductivity (σ)	Permittivity (εr)
750	41.1	57.0	0.2	1.4	0.2	0	0.89	41.9
835	40.3	57.9	0.2	1.4	0.2	0	0.90	41.5
900	40.3	57.9	0.2	1.4	0.2	0	0.97	41.5
1800, 1900, 2000	55.2	0	0	0.3	0	44.5	1.40	40.0
2450	55.0	0	0	0	0	45.0	1.80	39.2
2600	54.8	0	0	0.1	0	45.1	1.96	39.0

Simulating Liquid for 5GHz, Manufactured by SPEAG

Ingredients	(% by weight)
Water	64~78%
Mineral oil	11~18%
Emulsifiers	9~15%
Additives and Salt	2~3%

<Tissue Check Results>

Frequency (MHz)	Liquid Temp. (℃)	Conductivity (σ)	Permittivity (ε_r)	Conductivity Target (σ)	Permittivity Target (ε_r)	Delta (σ) (%)	Delta (ε_r) (%)	Limit (%)	Date
1900	22.5	1.405	40.193	1.40	40.00	0.36	0.48	±5	2021/1/18
2600	22.5	2.014	38.831	1.96	39.00	2.76	-0.43	±5	2021/1/18

6.2 System Verification

Comparing to the original SAR value provided by SPEAG, the verification data should be within its specification of 10 %. Below table shows the target SAR and measured SAR after normalized to 1W input power. The table below indicates the system performance check can meet the variation criterion and the plots can be referred to Appendix D.

<System Verification Results>

Date	Frequency (MHz)2	Input Power (mW)	Dipole S/N	Probe S/N	DAE S/N	Measured 1g SAR (W/kg)	Targeted 1g SAR (W/kg)	Normalized 1g SAR (W/kg)	Deviation (%)
2021/1/18	1900	50	D1900V2-5d041	3931	577	2.14	40.20	42.8	6.47
2021/1/18	2600	50	D2600V2-1008	3931	577	2.97	56.40	59.4	5.32